030-32046
P: ML112901344

MS SEDCO
SENSORS & SWITCHES

Office of Federal and State Materials and
Environmental Management Programs
Division Materials Safety and State Agreements
U.S. Nuclear Regulatory Commission
Washington D.C. 20555-0001

September 15, 2011

This letter and supporting documents are for the purpose of renewing the below listed licenses.

License Numbers:
13-26301-01
13-26301-02E

No aspect of our program, or product, has changed.

Please contact me if you require any additional information.

Sincerely,

Mark A Stults
Vice President/General Manager

576206

8701 CASTLE PARK DR. ■ INDIANAPOLIS, IN 46256 ■ PHONE 800.842.2545 ■ FAX 800.849.3387 ■ www.mssedco.com

R-3's license for ACTION

NRC FORM 313 (3-2009) 10 CFR 30, 32, 33, 34, 35, 36, 39, and 40 — U.S. NUCLEAR REGULATORY COMMISSION	APPROVED BY OMB: NO. 3150-0120 — EXPIRES: 3/31/2012
APPLICATION FOR MATERIALS LICENSE	Estimated burden per response to comply with this mandatory collection request: 4.3 hours. Submittal of the application is necessary to determine that the applicant is qualified and that adequate procedures exist to protect the public health and safety. Send comments regarding burden estimate to the Records and FOIA/Privacy Services Branch (T-5 F53), U.S. Nuclear Regulatory Commission, Washington, DC 20555-0001, or by internet e-mail to infocollects.resource@nrc.gov, and to the Desk Officer, Office of Information and Regulatory Affairs, NEOB-10202, (3150-0120), Office of Management and Budget, Washington, DC 20503. If a means used to impose an information collection does not display a currently valid OMB control number, the NRC may not conduct or sponsor, and a person is not required to respond to, the information collection.

INSTRUCTIONS: SEE THE APPROPRIATE LICENSE APPLICATION GUIDE FOR DETAILED INSTRUCTIONS FOR COMPLETING APPLICATION. SEND TWO COPIES OF THE ENTIRE COMPLETED APPLICATION TO THE NRC OFFICE SPECIFIED BELOW.

APPLICATION FOR DISTRIBUTION OF EXEMPT PRODUCTS FILE APPLICATIONS WITH:

OFFICE OF FEDERAL & STATE MATERIALS AND
ENVIRONMENTAL MANAGEMENT PROGRAMS
DIVISION OF MATERIALS SAFETY AND STATE AGREEMENTS
U.S. NUCLEAR REGULATORY COMMISSION
WASHINGTON, DC 20555-0001

ALL OTHER PERSONS FILE APPLICATIONS AS FOLLOWS:

IF YOU ARE LOCATED IN:

ALABAMA, CONNECTICUT, DELAWARE, DISTRICT OF COLUMBIA, FLORIDA, GEORGIA, KENTUCKY, MAINE, MARYLAND, MASSACHUSETTS, NEW HAMPSHIRE, NEW JERSEY, NEW YORK, NORTH CAROLINA, PENNSYLVANIA, PUERTO RICO, RHODE ISLAND, SOUTH CAROLINA, TENNESSEE, VERMONT, VIRGINIA, VIRGIN ISLANDS, OR WEST VIRGINIA, SEND APPLICATIONS TO:

LICENSING ASSISTANCE TEAM
DIVISION OF NUCLEAR MATERIALS SAFETY
U.S. NUCLEAR REGULATORY COMMISSION, REGION I
475 ALLENDALE ROAD
KING OF PRUSSIA, PA 19406-1415

IF YOU ARE LOCATED IN:

ILLINOIS, INDIANA, IOWA, MICHIGAN, MINNESOTA, MISSOURI, OHIO, OR WISCONSIN, SEND APPLICATIONS TO:

MATERIALS LICENSING BRANCH
U.S. NUCLEAR REGULATORY COMMISSION, REGION III
2443 WARRENVILLE ROAD, SUITE 210
LISLE, IL 60532-4352

ALASKA, ARIZONA, ARKANSAS, CALIFORNIA, COLORADO, HAWAII, IDAHO, KANSAS, LOUISIANA, MISSISSIPPI, MONTANA, NEBRASKA, NEVADA, NEW MEXICO, NORTH DAKOTA, OKLAHOMA, OREGON, PACIFIC TRUST TERRITORIES, SOUTH DAKOTA, TEXAS, UTAH, WASHINGTON, OR WYOMING, SEND APPLICATIONS TO:

NUCLEAR MATERIALS LICENSING BRANCH
U.S. NUCLEAR REGULATORY COMMISSION, REGION IV
612 E. LAMAR BOULEVARD, SUITE 400
ARLINGTON, TX 76011-4125

PERSONS LOCATED IN AGREEMENT STATES SEND APPLICATIONS TO THE U.S. NUCLEAR REGULATORY COMMISSION ONLY IF THEY WISH TO POSSESS AND USE LICENSED MATERIAL IN STATES SUBJECT TO U.S.NUCLEAR REGULATORY COMMISSION JURISDICTIONS.

1. THIS IS AN APPLICATION FOR *(Check appropriate item)*

- [ ] A. NEW LICENSE
- [ ] B. AMENDMENT TO LICENSE NUMBER
- [x] C. RENEWAL OF LICENSE NUMBER **13-26301-01**

2. NAME AND MAILING ADDRESS OF APPLICANT *(Include ZIP code)*

MS Sedco Inc
8701 Castle Park DR
Indianapolis, IN 46256

3. ADDRESS WHERE LICENSED MATERIAL WILL BE USED OR POSSESSED

MS Sedco Inc
8701 Castle Park DR
Indianapolis, IN 46256

4. NAME OF PERSON TO BE CONTACTED ABOUT THIS APPLICATION

Mark A Stults

TELEPHONE NUMBER

(317) 842-2545

SUBMIT ITEMS 5 THROUGH 11 ON 8-1/2 X 11" PAPER. THE TYPE AND SCOPE OF INFORMATION TO BE PROVIDED IS DESCRIBED IN THE LICENSE APPLICATION GUIDE.

5. RADIOACTIVE MATERIAL
a. Element and mass number; b. chemical and/or physical form; and c. maiximum amount which will be possessed at any one time.

6. PURPOSE(S) FOR WHICH LICENSED MATERIAL WILL BE USED.

7. INDIVIDUAL(S) RESPONSIBLE FOR RADIATION SAFETY PROGRAM AND THEIR TRAINING EXPERIENCE.

8. TRAINING FOR INDIVIDUALS WORKING IN OR FREQUENTING RESTRICTED AREAS.

9. FACILITIES AND EQUIPMENT.

10. RADIATION SAFETY PROGRAM.

11. WASTE MANAGEMENT.

12. LICENSE FEES *(See 10 CFR 170 and Section 170.31)*
FEE CATEGORY 3B — AMOUNT ENCLOSED $ **0.00**

13. CERTIFICATION. *(Must be completed by applicant)* THE APPLICANT UNDERSTANDS THAT ALL STATEMENTS AND REPRESENTATIONS MADE IN THIS APPLICATION ARE BINDING UPON THE APPLICANT.

THE APPLICANT AND ANY OFFICIAL EXECUTING THIS CERTIFICATION ON BEHALF OF THE APPLICANT, NAMED IN ITEM 2, CERTIFY THAT THIS APPLICATION IS PREPARED IN CONFORMITY WITH TITLE 10, CODE OF FEDERAL REGULATIONS, PARTS 30, 32, 33, 34, 35, 36, 39, AND 40, AND THAT ALL INFORMATION CONTANED HEREIN IS TRUE AND CORRECT TO THE BEST OF THEIR KNOWLEDGE AND BELIEF.

WARNING: 18 U.S.C. SECTION 1001 ACT OF JUNE 25, 1948 62 STAT. 749 MAKES IT A CRIMINAL OFFENSE TO MAKE A WILLFULLY FALSE STATEMENT OR REPRESENTATION TO ANY DEPARTMENT OR AGENCY OF THE UNITED STATES AS TO ANY MATTER WITHIN ITS JURISDICTION.

CERTIFYING OFFICER -- TYPED/PRINTED NAME AND TITLE	SIGNATURE	DATE
Mark A Stults	Mark Stults	9/15/11 ~~08/02/2011~~

FOR NRC USE ONLY

TYPE OF FEE	FEE LOG	FEE CATEGORY	AMOUNT RECEIVED	CHECK NUMBER	COMMENTS
			$		
APPROVED BY				DATE	

PRINTED ON RECYCLED PAPER

FSME's License FOR ACTION

NRC FORM 313 (3-2009) 10 CFR 30, 32, 33, 34, 35, 36, 39, and 40

U.S. NUCLEAR REGULATORY COMMISSION

APPLICATION FOR MATERIALS LICENSE

APPROVED BY OMB: NO. 3150-0120 **EXPIRES: 3/31/2012**

Estimated burden per response to comply with this mandatory collection request: 4.3 hours. Submittal of the application is necessary to determine that the applicant is qualified and that adequate procedures exist to protect the public health and safety. Send comments regarding burden estimate to the Records and FOIA/Privacy Services Branch (T-5 F53), U.S. Nuclear Regulatory Commission, Washington, DC 20555-0001, or by internet e-mail to infocollects.resource@nrc.gov, and to the Desk Officer, Office of Information and Regulatory Affairs, NEOB-10202, (3150-0120), Office of Management and Budget, Washington, DC 20503. If a means used to impose an information collection does not display a currently valid OMB control number, the NRC may not conduct or sponsor, and a person is not required to respond to, the information collection.

INSTRUCTIONS: SEE THE APPROPRIATE LICENSE APPLICATION GUIDE FOR DETAILED INSTRLCTIONS FOR COMPLETING APPLICATION. SEND TWO COPIES OF THE ENTIRE COMPLETED APPLICATION TO THE NRC OFFICE SPECIFIEC BELOW.

APPLICATION FOR DISTRIBUTION OF EXEMPT PRODUCTS FILE APPLICATIONS WITH:

OFFICE OF FEDERAL & STATE MATERIALS AND
ENVIRONMENTAL MANAGEMENT PROGRAMS
DIVISION OF MATERIALS SAFETY AND STATE AGREEMENTS
U.S. NUCLEAR REGULATORY COMMISSION
WASHINGTON, DC 20555-0001

ALL OTHER PERSONS FILE APPLICATIONS AS FOLLOWS:

IF YOU ARE LOCATED IN:

ALABAMA, CONNECTICUT, DELAWARE, DISTRICT OF COLUMBIA, FLORIDA, GEORGIA, KENTUCKY, MAINE, MARYLAND, MASSACHUSETTS, NEW HAMPSHIRE, NEW JERSEY, NEW YORK, NORTH CAROLINA, PENNSYLVANIA, PUERTO RICO, RHODE ISLAND, SOUTH CAROLINA, TENNESSEE, VERMONT, VIRGINIA, VIRGIN ISLANDS, OR WEST VIRGINIA, SEND APPLICATIONS TO:

LICENSING ASSISTANCE TEAM
DIVISION OF NUCLEAR MATERIALS SAFETY
U.S. NUCLEAR REGULATORY COMMISSION, REGION I
475 ALLENDALE ROAD
KING OF PRUSSIA, PA 19406-1415

IF YOU ARE LOCATED IN:

ILLINOIS, INDIANA, IOWA, MICHIGAN, MINNESOTA, MISSOURI, OHIO, OR WISCONSIN, SEND APPLICATIONS TO:

MATERIALS LICENSING BRANCH
U.S. NUCLEAR REGULATORY COMMISSION, REGION III
2443 WARRENVILLE ROAD, SUITE 210
LISLE, IL 60532-4352

ALASKA, ARIZONA, ARKANSAS, CALIFORNIA, COLORADO, HAWAII, IDAHO, KANSAS, LOUISIANA, MISSISSIPPI, MONTANA, NEBRASKA, NEVADA, NEW MEXICO, NORTH DAKOTA, OKLAHOMA, OREGON, PACIFIC TRUST TERRITORIES, SOUTH DAKOTA, TEXAS, UTAH, WASHINGTON, OR WYOMING, SEND APPLICATIONS TO:

NUCLEAR MATERIALS LICENSING BRANCH
U.S. NUCLEAR REGULATORY COMMISSION, REGION IV
612 E. LAMAR BOULEVARD, SUITE 400
ARLINGTON, TX 76011-4125

PERSONS LOCATED IN AGREEMENT STATES SEND APPLICATIONS TO THE U.S. NUCLEAR REGULATORY COMMISSION ONLY IF THEY WISH TO POSSESS AND USE LICENSED MATERIAL IN STATES SUBJECT TO U.S.NUCLEAR REGULATORY COMMISSION JURISDICTIONS.

1. THIS IS AN APPLICATION FOR *(Check appropriate item)*

- [ ] A. NEW LICENSE
- [ ] B. AMENDMENT TO LICENSE NUMBER
- [x] C. RENEWAL OF LICENSE NUMBER **13-26301-02E**

2. NAME AND MAILING ADDRESS OF APPLICANT *(Include ZIP code)*

MS Sedco Inc
8701 Castle Park DR
Indianapolis, IN 46256

3. ADDRESS WHERE LICENSED MATERIAL WILL BE USED OR POSSESSED

MS Sedco Inc
8701 Castle Park DR
Indianapolis, IN 46256

4. NAME OF PERSON TO BE CONTACTED ABOUT THIS APPLICATION

Mark A Stults

TELEPHONE NUMBER

(317) 842-2545

SUBMIT ITEMS 5 THROUGH 11 ON 8-1/2 X 11" PAPER. THE TYPE AND SCOPE OF INFORMATION TO BE PROVIDED IS DESCRIBED IN THE LICENSE APPLICATION GUIDE.

5. RADIOACTIVE MATERIAL
a. Element and mass number; b. chemical and/or physical form; and c. maiximum amount which will be possessed at any one time.

6. PURPOSE(S) FOR WHICH LICENSED MATERIAL WILL BE USED.

7. INDIVIDUAL(S) RESPONSIBLE FOR RADIATION SAFETY PROGRAM AND THEIR TRAINING EXPERIENCE.

8. TRAINING FOR INDIVIDUALS WORKING IN OR FREQUENTING RESTRICTED AREAS.

9. FACILITIES AND EQUIPMENT.

10. RADIATION SAFETY PROGRAM.

11. WASTE MANAGEMENT.

12. LICENSE FEES *(See 10 CFR 170 and Section 170.31)*

FEE CATEGORY 3H AMOUNT ENCLOSED $ **0.00**

13. CERTIFICATION. *(Must be completed by applicant)* THE APPLICANT UNDERSTANDS THAT ALL STATEMENTS AND REPRESENTATIONS MADE IN THIS APPLICATION ARE BINDING UPON THE APPLICANT.

THE APPLICANT AND ANY OFFICIAL EXECUTING THIS CERTIFICATION ON BEHALF OF THE APPLICANT, NAMED IN ITEM 2, CERTIFY THAT THIS APPLICATION IS PREPARED IN CONFORMITY WITH TITLE 10, CODE OF FEDERAL REGULATIONS, PARTS 30, 32, 33, 34, 35, 36, 39, AND 40, AND THAT ALL INFORMATION CONTANED HEREIN IS TRUE AND CORRECT TO THE BEST OF THEIR KNOWLEDGE AND BELIEF.

WARNING: 18 U.S.C. SECTION 1001 ACT OF JUNE 25, 1948 62 STAT. 749 MAKES IT A CRIMINAL OFFENSE TO MAKE A WILLFULLY FALSE STATEMENT OR REPRESENTATION TO ANY DEPARTMENT OR AGENCY OF THE UNITED STATES AS TO ANY MATTER WITHIN ITS JURISDICTION.

CERTIFYING OFFICER -- TYPED/PRINTED NAME AND TITLE: **Mark A Stults**

SIGNATURE: [signature]

DATE: 9/15/11 ~~08/02/2011~~

FOR NRC USE ONLY

TYPE OF FEE	FEE LOG	FEE CATEGORY	AMOUNT RECEIVED	CHECK NUMBER	COMMENTS
			$		
APPROVED BY				DATE	

PRINTED ON RECYCLED PAPER

ITEM NO. 5

RADIOACTIVE MATERIAL

AMERICIUM - 241

Physical Form:
Foil, as manufactured by NRD, and identified per Registration No. NRD A-001. This material supplied to MS Sedco, Inc. as a component, an ionization chamber housing for smoke detectors as supplied by Nemoto & Company, Ltd., Tokyo, Japan, Model NIS-09C (see Exhibit No. l). Each individual chamber to contain approximately 0.9μCi.

Maximum Possession Limit:
Maximum possession limit - 9mCi with no single source to exceed a nominal 0.9μCi each.

ITEM NO. 6

PURPOSE(S) FOR WHICH LICENSED MATERIAL WILL BE USED

The purpose of use as noted in this item is to receive, possess, conduct R/D, store the radioactive matter noted in item No.5 on the previous page, for the ultimate purpose of the manufacture and distribution of a door holding device to persons exempt from licensing.

ITEM NO. 7

INDIVIDUAL(S) RESPONSIBLE FOR RADIATION SAFETY PROGRAM AND THEIR TRAINING AND EXPERIENCE

Mr. Mark A Stults has been appointed as our Radiation Safety Officer (RSO)

Attached herewith are the responsibilities and duties of the Radiation Safety Officer (RSO)

RADIATION SAFETY OFFICER. RESPONSIBILITIES AND DUTIES,
RESPONSIBILITIES:
Be familiar with all pertinent NRC regulations, the terms of our license, and the information submitted in support of the request for the license and subsequent amendments.
Establish a program to ensure that all persons whose duties may require them to use radioactive material are properly instructed.
Establish routine measures of radiation control,
Maintain surveillance of company facilities and equipment to determine the effectiveness or the measures.
Maintain all records relative to radiation surveys, as well as records on material control.
Investigate and document all matters considered as emergencies or other unusual incidents that may be or could create a radiation safety hazard.
DUTIES:
Carry out such duties as dictated under responsibilities noted above.
Provide instrumentation and conduct such radiation surveys as are required in the control of contamination and the maintenance of all records thereof.
Review and establish all operating procedures with specific emphasis on the A.L.A.R.A. principal.

ITEM NO. 8

RADIATION TRAINING FOR INDIVIDUALS WORKING IN OR FREQUENTING RESTRICTED AREAS

In accordance with 10 CFR 19, all individuals who are associated with or who may enter our restricted area will receive training in accordance with their specific needs,

Not withstanding the above, all persons will be informed that our company is a licensed facility. Copies of our license and conditions thereof will be discussed with emphasis on safety, security and corporate procedures which must be adhered to.

This training will be given by the RSO

ITEM NO.9

FACILITIES AND EQUIPMENT FACILITIES

Attached are two facility drawings, noted as Fig. I and Fig. 2, Figure 1 shows the entire wing of our building where Am-241, in the form of smoke detector chambers will be used and stored. Figure 2 shows only that area used for storage and assembly. This drawing includes the specific location of work benches and storage cabinets.

EQUIPMENT

Radiation Survey Instrument:
MFG: Ludlum Instruments, Inc.
501 Oak Street, P.O. 13ox 510 Sweetwater, TX 79556

Model: 44-10

This device will be calibrated on a yearly basis by the MFG.

NOTE: Specific shielding, either for work or storage purposes, is not required.

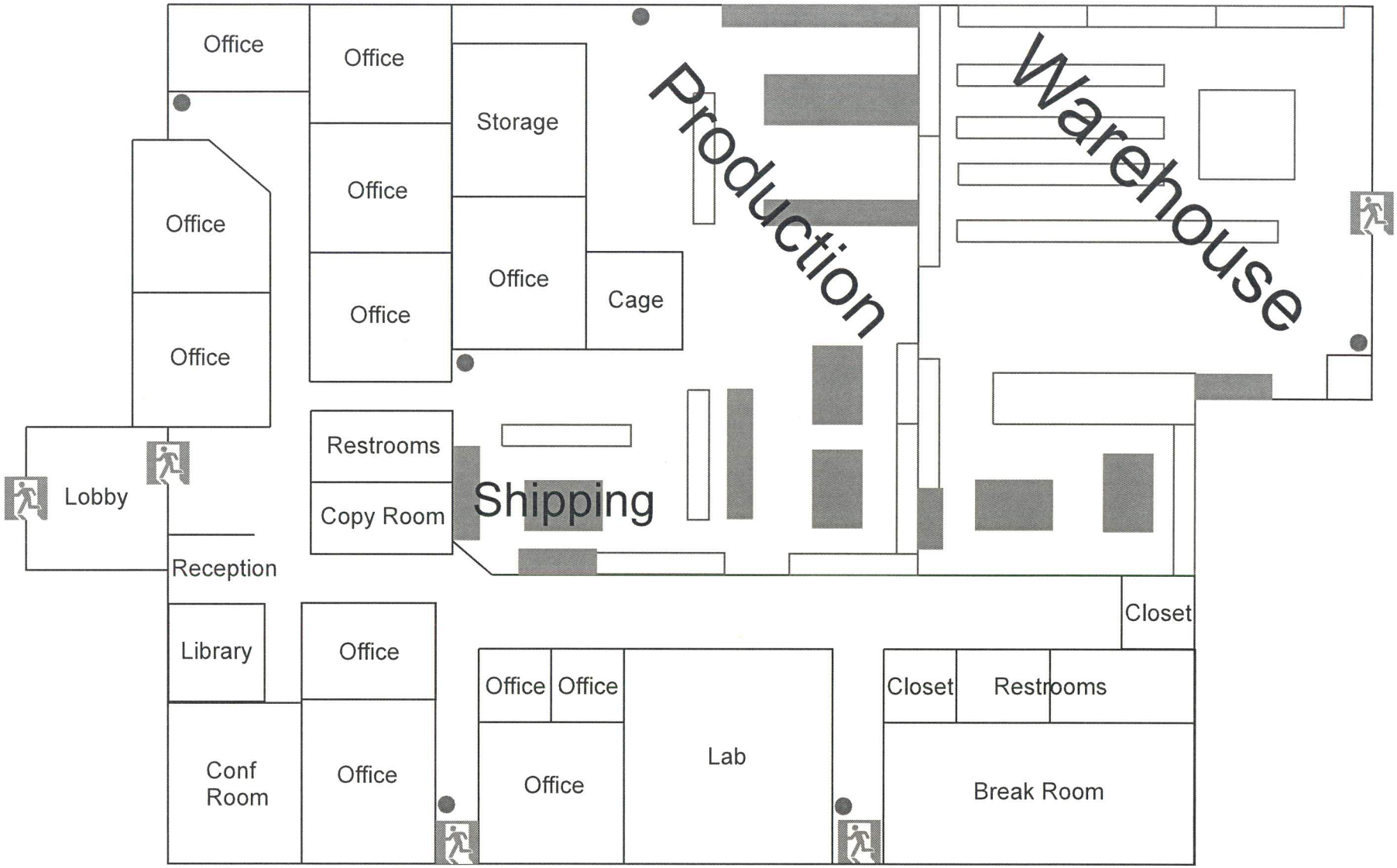

MS Sedco Inc

Shelving

Workbench/desk

• Fire Extinguisher

EXIT

Fig 1

RADIATION SMEAR SURVEY FORM

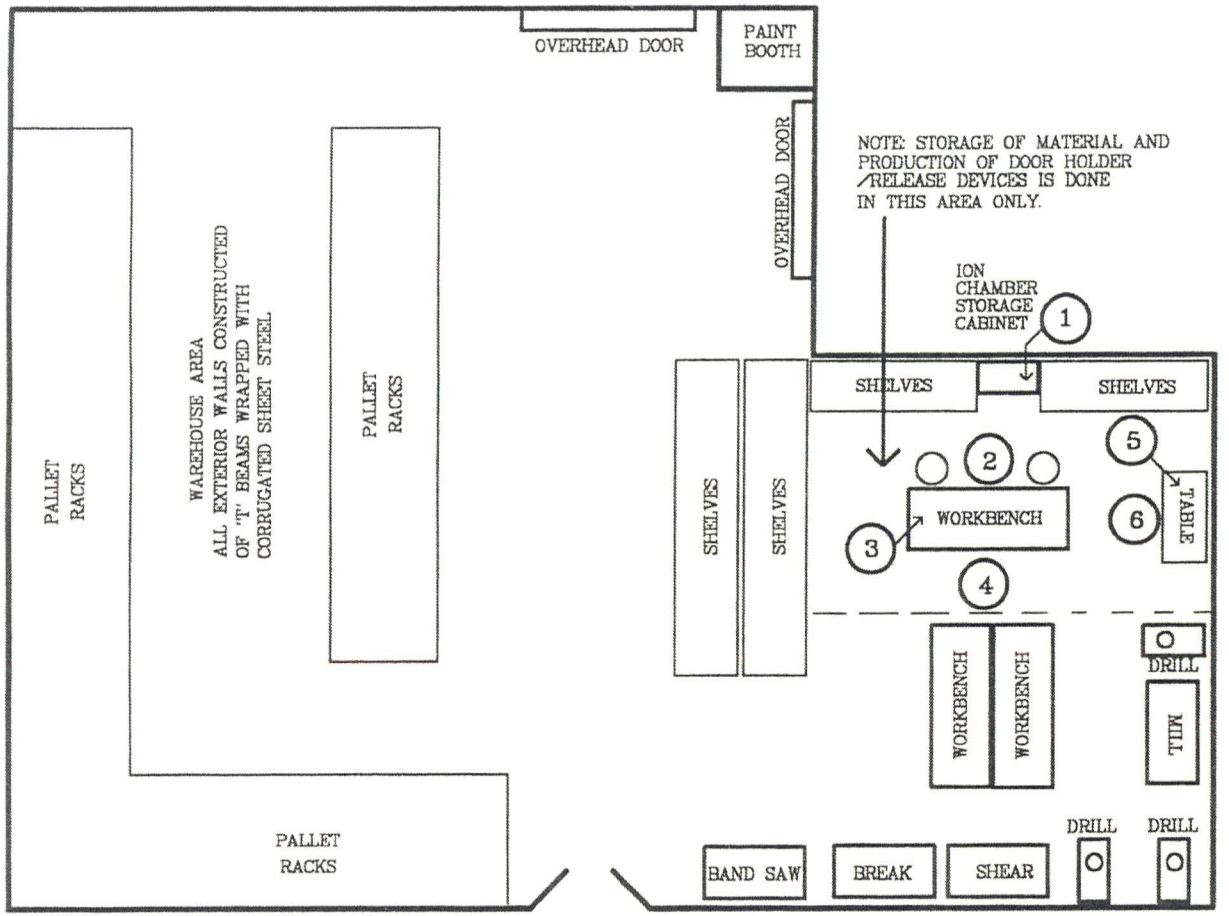

LOCATION	RESULTS D/M
1) I.C. STOR CABINET	_____
2) FLOOR	_____
3) WB	_____
4) FLOOR	_____
5) TABLE	_____
6) FLOOR	_____

PRODUCTION AND STORAGE AREA

(#) LOCATIONS WHERE SMEAR SAMPLES WILL BE TAKEN

FORM DATED 2-18-02

DATE OF SURVEY_____ SURVEY BY_____ ANALYZED BY_____

Fig 2

ITEM 10

RADIATION SAFETY PROGRAM

MS Sedco, Inc. has developed a Radiation Safety and Accountability Program that includes the following:
Appointed a Radiation Safety Officer with delegated authority
Provided RSO with acceptable training and outlined responsibilities and duties
Developed procedures for the following:
Ordering and receiving Am--241
Conducting radiation surveys
Calibration of device
Record system
Safety in package opening
General training or indoctrination for ancillary personnel
Leak testing

RADIATION SAFETY PROGRAM

PROCEDURES FOR ORDERING AND RECEIVING RADIOACTIVE MATERIAL

All orders for radioactive material must be countersigned by the RSO. The RSO must ensure that the requested material and quantities are authorized by the license and that possession limits have not been exceeded.

During working hours, carriers must be instructed to deliver all radioactive packages directly to the radioactive material use or storage area.

After 5:00 pm our facilities are closed and shipments are not accepted.

3. On delivery, if the package appears to be severely damaged, the R.S.O. or his duly appointed representative must be called and a radiation survey made to determine if surface contamination exists.

RADIATION SAFETY PROGRAM AREA SURVEY

Radiation Area Smear Surveys will be made on a monthly basis in those areas where Am-241 components are either used or stored.
Smears will be made using Whatman Grade 413 Filter Paper, Qualitative over an area of approximately 1002 cm. The smears will be evaluated using our Ludlum Measurements, Inc., Portable Scaler, Model No. 44-10.

20 c/m above background would be considered as action for decontamination.

ITEM NO. 11

EXHIBIT 1

NIS－09C

NIS-09C is an ionization type smoke sensor containing a tiny amount of 241Am radioisotope, however, the sensor itself is fully covered by metallic housing so that no radiation leaks outside of the sensor.

Ratings

Items	Specifications
Supply voltage	Less than DC 7 ~ 12V
Current	27 ± 3pA
Radiation source	Americium-241, 33.3KBq
Ambient temp.	0 ~ 50oC
Ambient humidity	Less than 95% RH

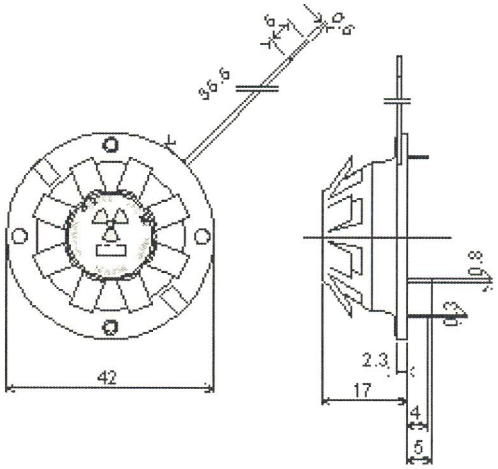

Structure

Characteristics

Items	Specifications
Output in clean air	5.6 ± 0.4V
Smoke sensitivity 2%/foot Cotton thread	0.6 ± 0.1V

WASTE MANAGEMENT

It is anticipated that very little waste will be generated; however, we have been advised by our supplier that ion chamber detector heads that did not pass our quality control procedures or failed to properly function could be returned to them for disposal and credit. Also, units returned by the customer either for failure to function electronically or having outlasted their duty cycle would be dismantled and the ion chamber system either reused or returned to the supplier for disposal.

In the event that these units were returned to the supplier, packaging and shipments would be made in accordance with I.O.T.A. regulations.

MS SEDCO

ISORS & SWITCHES

RK DR. ■ INDIANAPOLIS, IN 46256

UNITED STATES POSTAGE
PITNEY BOWES
02 1P $ 000.88⁰
0004400257 SEP 15 2011
MAILED FROM ZIP CODE 46256

TWFN-8-A-23

Office of Federal and State Materials and
Environmental Management Programs
Division Materials Safety and State
Agreements
U.S. Nuclear Regulatory Commission
Washington D.C. 20555-0001