SHEET NO.	BASIN ID	OUTLET NUMBER	CULVERT PIPE FROM BASIN TO DROP STRUCTURE						DROP STRUCTURE		CULVERT PIPE FROM DROP STRUCTURE TO OUTLET PROTECTION				OUTLET PROTECTION				LEVEL SPREADER							PLUNGE POOL	
			INVERT IN	INVERT OUT	SIZE D (IN)	LENGTH (LF)	SLOPE (%)	10-YR STORM FLOW (CFS)	INVERT IN	INVERT OUT	INVERT IN	INVERT OUT	LENGTH (LF)	SLOPE (%)	WIDTH W (FT)	LENGTH La (FT)	THICKNESS (IN)	RIP-RAP SIZE	EXISTING GRADE ELEV.	CLEARANCE Y (IN)	WIDTH X (FT)	# OF LEVEL SPREADERS	LENGTH Lb (FT)	TOP EL. TE	TOE SLOPE TOP EL. STE	DEPTH H (IN)	BOTTOM EL. BE
8121A	1.1	**1.1**	664.00	663.55	24	23	1.96	2.77	663.55	661.87	661.87	661.63	24	1.00	10.80	12.00	18	R-4	662.38	12	6.00	1	84	662.63	662.78	24	659.63
8121A	1.2	**1.2.A**	686.70	684.00	24	145	1.87	8.47	684.00	662.56	662.56	661.97	59	1.00	16.40	26.00	18	R-4	662.72	12	6.00	2	128	662.97	663.12	24	659.97
8103A		**1.2.B**	686.70	678.00	24	448	1.94		678.00	657.98	657.98	657.64	34	1.00	16.40	26.00	18	R-4	658.39	12	6.00		128	658.64	658.79	24	655.64
8106A	1.3	**1.3**	687.00	677.00	24	611	1.64	0.37	677.00	669.99	669.99	669.35	64	1.00	10.80	12.00	18	R-4	670.10	12	6.00	1	12	670.35	670.50	24	667.35
8106A	1.5	**1.5.A**	686.00	684.00	36	123	1.62	7.57	684.00	667.69	667.69	666.75	94	1.00	18.60	24.00	18	R-4	668.00	18	9.00	2	114	668.25	668.48	36	663.75
8106A		**1.5.B**	686.00	685.50	36	42	1.18		685.50	665.26	665.26	664.95	31	1.00	18.60	24.00	18	R-4	666.20	18	9.00		114	666.45	666.67	36	661.95
8106A	3.1	**3.1**	674.00	673.55	24	25	1.83	5.27	673.25	672.23	672.23	672.12	11	1.00	12.40	16.00	18	R-4	672.87	12	6.00	1	159	673.12	673.27	24	670.12
8112A	3.2	**3.2.A**	650.50	649.25	24	100	1.25	16.01	*	*	-	-	-	-	21.20	38.00	18	R-4	650.00	12	6.00	2	209	650.25	650.40	24	647.25
8112A		**3.2.B**	650.50	649.25	24	100	1.25		*	*	-	-	-	-	21.20	38.00	18	R-4	650.00	12	6.00		209	650.25	650.40	24	647.25
8115A	6	**6**	630.00	624.15	24	327	1.79	3.75	*	*	-	-	-	-	10.80	12.00	18	R-4	624.90	12	6.00	1	49	625.15	625.30	24	622.15
8119A	8	**8**	664.00	658.05	24	379	1.57	0.23	-	-	-	-	-	-	10.80	12.00	18	R-4	658.80	12	6.00	1	10	659.05	659.20	24	656.05
8118A	9	**9**	663.00	662.00	24	51	1.96	0.12	662.00	659.82	659.82	659.12	69	1.00	10.80	12.00	18	R-4	659.87	12	6.00	1	10	660.12	660.27	24	657.12
8101A/ 8117	10.1	**10.1**	685.00	684.75	24	16	1.55	8.04	684.75	683.11	683.11	683.02	8	1.00	16.40	26.00	18	R-4	683.77	12	6.00	1	105	684.02	684.17	24	681.02
8103A	10.4	**10.4**	664.00	663.50	24	28	1.80	3.55	663.50	660.65	660.65	660.37	28	1.00	10.80	12.00	18	R-4	661.12	12	6.00	1	47	661.37	661.52	24	658.37
8105A	12	**12**	685.00	681.72	24	209	1.57	0.17	-	-	-	681.72	-	-	10.80	12.00	18	R-4	682.47	12	6.00	1	10	682.72	682.87	24	679.72
8104A	13.1	**13.1**	718.00	717.50	24	31	1.61	0.34	717.50	716.79	716.79	716.60	20	1.00	10.80	12.00	18	R-4	717.35	12	6.00	1	10	717.60	717.75	24	714.60
8105A		**13.2A**	700.00	699.00	24	111	0.90	16.66	699.00	694.43	694.43	693.25	118	1.00	22.00	40.00	18	R-4	694.00	12	6.00	2	108.5	694.25	694.40	24	691.25
8105A		**13.2B**	700.00	699.00	24	111	0.90		699.00	694.39	694.39	693.25	114	1.00	22.00	40.00	18	R-4	694.00	12	6.00		108.5	694.25	694.40	24	691.25
8115A	18	**18**	619.00	618.50	24	39	1.29	0.00	618.50	616.99	616.99	616.65	34	1.00	10.80	12.00	18	R-4	617.40	12	6.00	1	10	617.65	617.80	24	614.65
8106A	22	**22**	677.00	675.25	24	166	1.05	0.73	-	-	-	-	-	-	10.80	12.00	18	R-4	676.00	12	6.00	1	22	676.25	676.40	24	673.25
	15.3														24.00	18.00	45.00	R-7*									
	21														46.00	34.00	45.00	R-7*									

*– WITH GROUT, PERMANENT OUTLET PROTECTION, NO LEVEL SPREADER

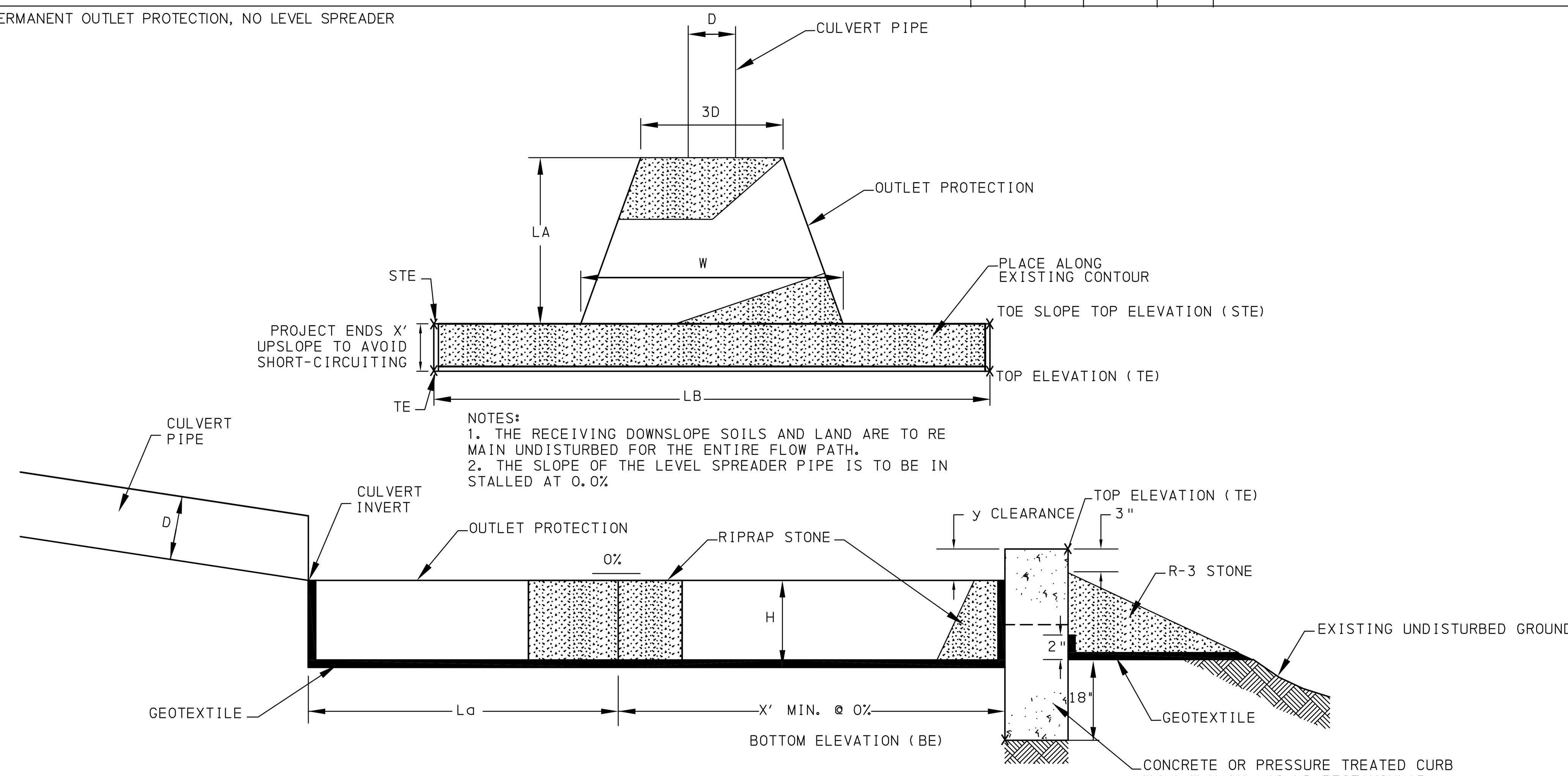

1	LEVEL SPREADER
-	NO SCALE

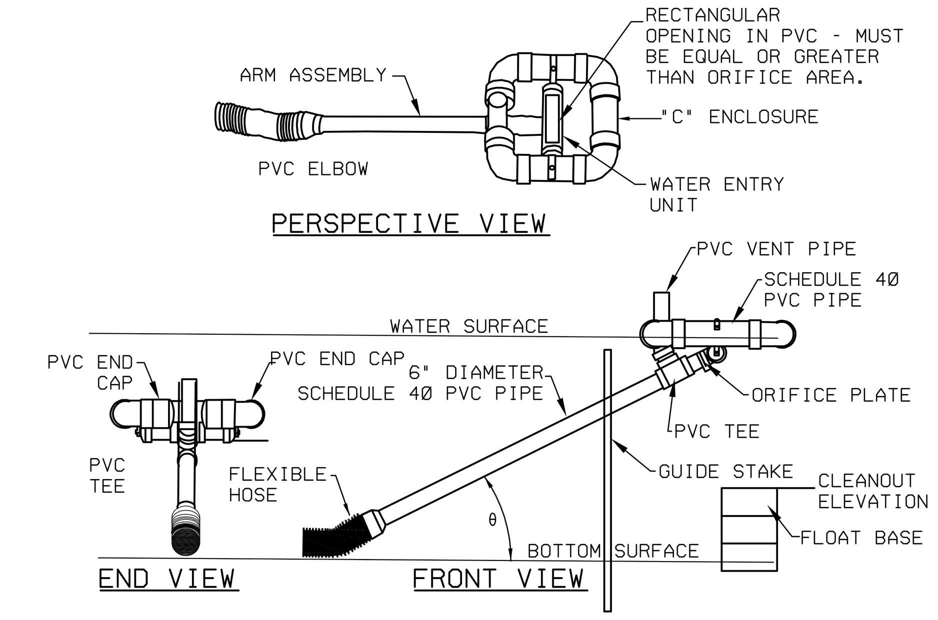

NOTE:
1. GUIDE STAKES SHOULD BE INSTALLED TO PREVENT THE SKIMMER FROM MOVING FROM SIDE TO SIDE.
2. A DEVICE (CONCRETE BLOCK OR EQUIVALENT) TO PREVENT THE SKIMMER FROM SETTLING BELOW THE TOP OF THE SEDIMENT STORAGE ZONE SHOULD BE INSTALLED.

4	BASIN FAIRCLOTH SKIMMER DETAIL
-	NO SCALE

NOTES

1. MATTING SHALL BE PLACED PERPENDICULAR TO THE DIRECTION OF TRAVEL.
2. IF THE SURFACE BECOMES SLICK, EXPANDED METAL GRADING CAN BE ADDED TO PROVIDE BETTER TRACTION.
3. DOWN GRADIENT PERIMETER CONTROL MEASURES MUST BE INSTALLED PRIOR TO USE.
4. INSPECT MATTING ON A WEEKLY BASIS AND AFTER ALL STORM EVENTS. REPLACE SECTIONS AS NEEDED.
5. AFTER OPERATION HAS BEEN COMPLETED, ALL MATERIAL SHOULD BE REMOVED FROM THE AREA AND THE GRADE RESTORED. COMPACTED AREAS SHOULD BE TILLED TO PROMOTE VEGETATIVE GROWTH. LARGE RUTS SHOULD BE FILLED IN. GEOTEXTILE SHOULD BE REMOVED AND PROPERLY DISPOSED OF.

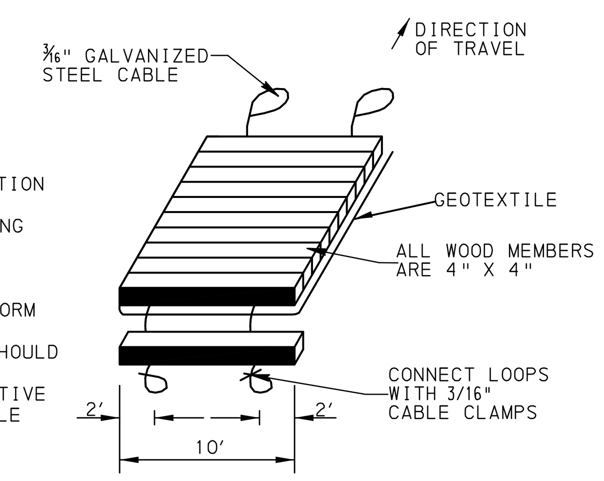

2	TEMPORARY WETLAND CROSSING MATTING
-	NO SCALE

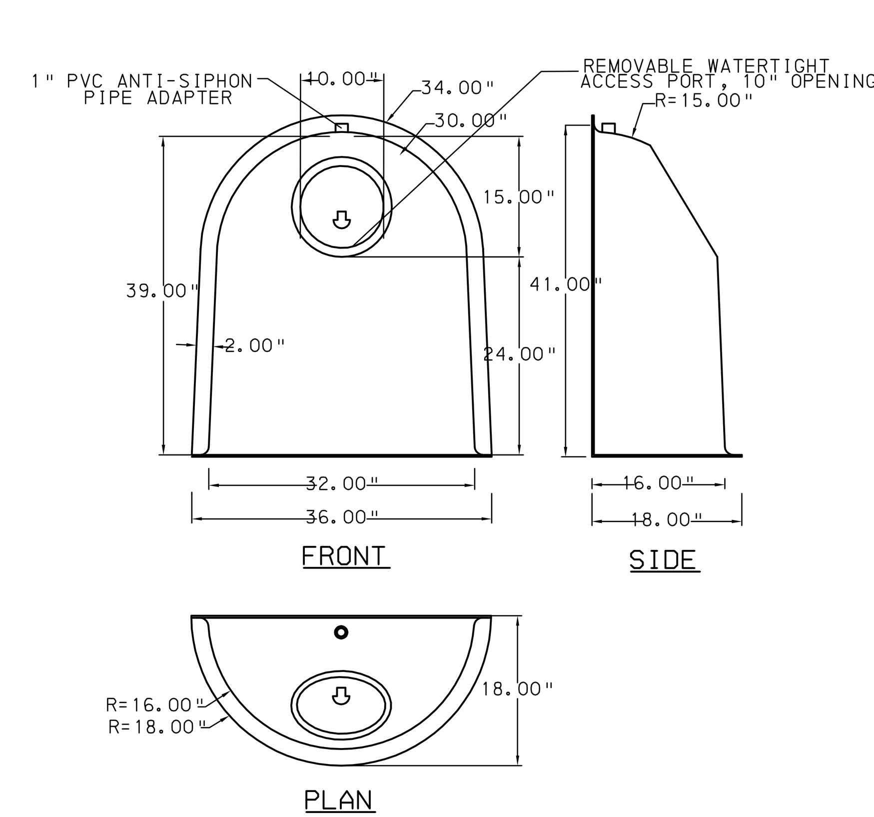

6	30F OIL & DEBRIS SNOUT DETAIL
-	NO SCALE

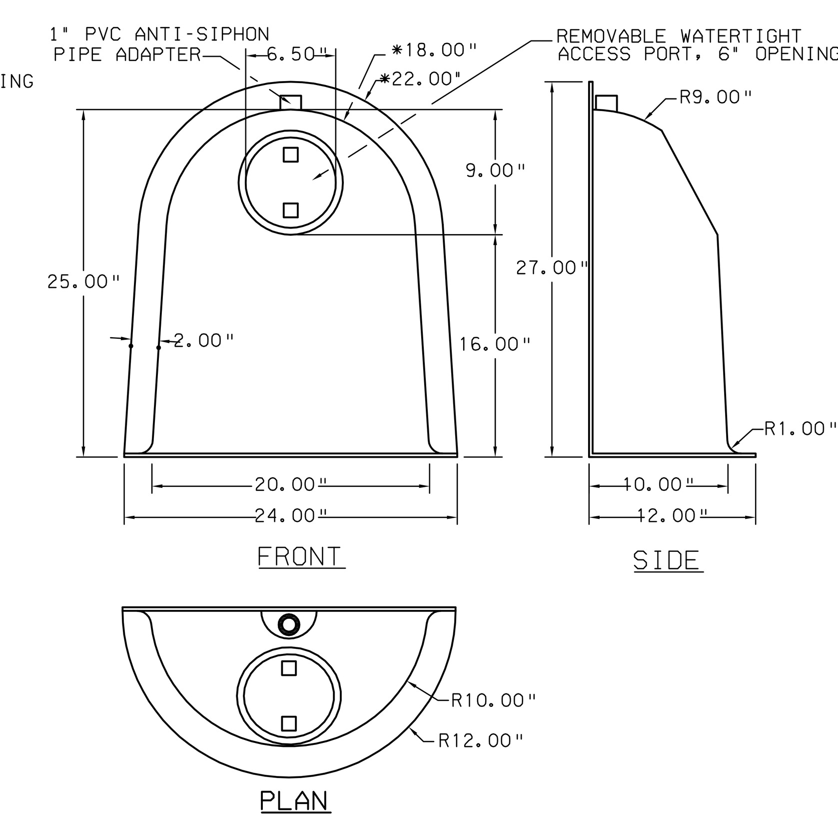

8	18F OIL & DEBRIS SNOUT DETAIL
-	NO SCALE

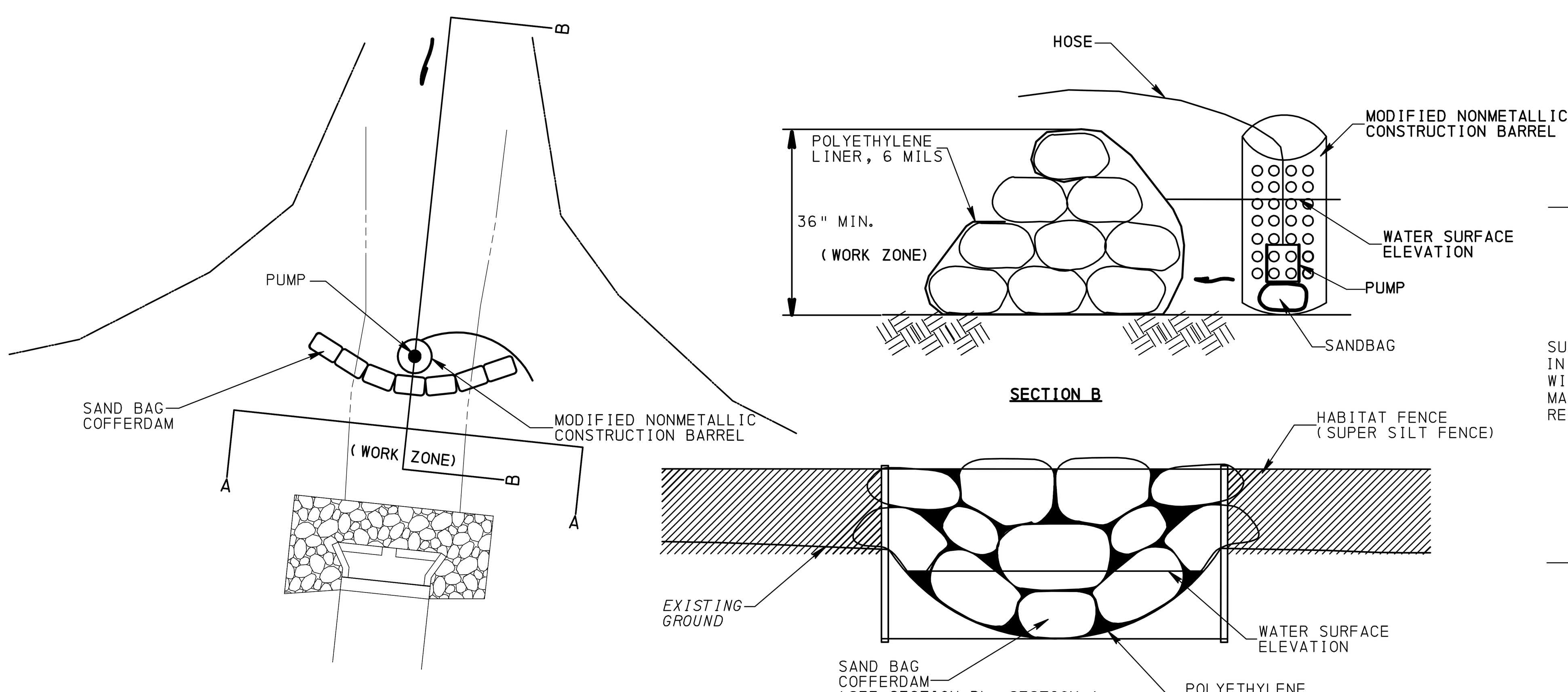

3	HABITAT AND STREAM BARRIER DETAIL
-	NO SCALE

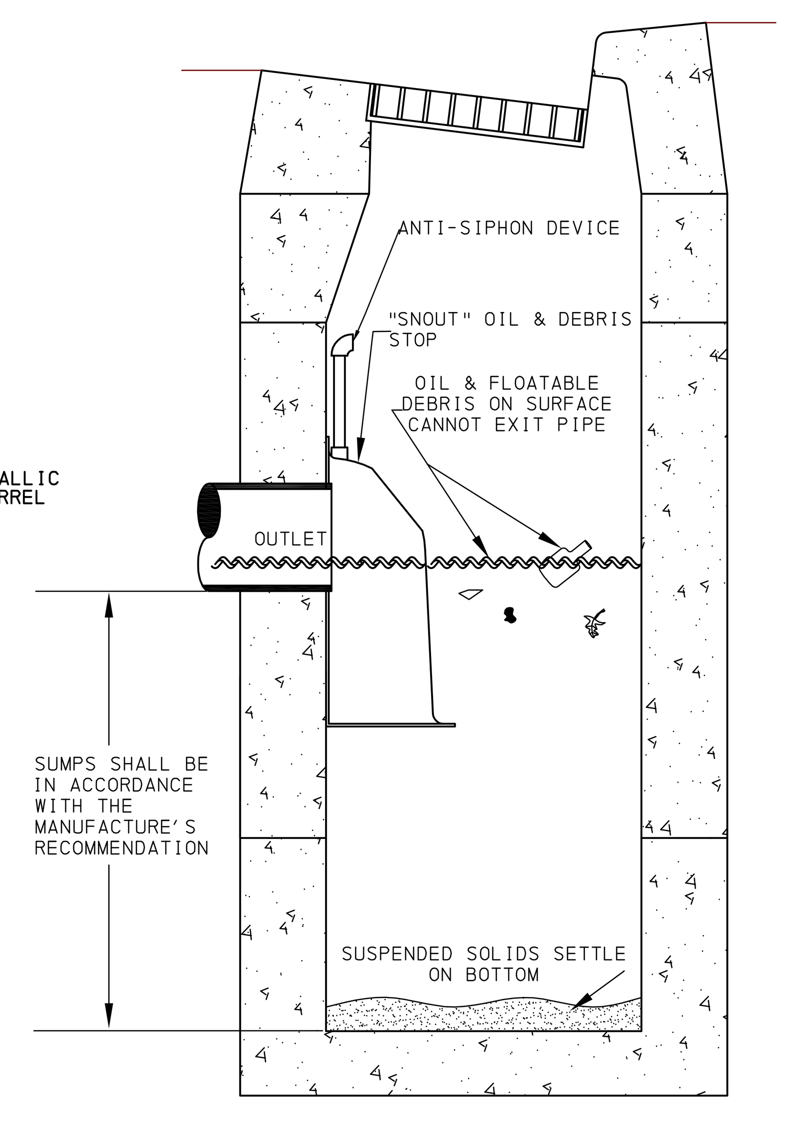

5	"SNOUT" INLET INSERT DETAIL
-	NO SCALE

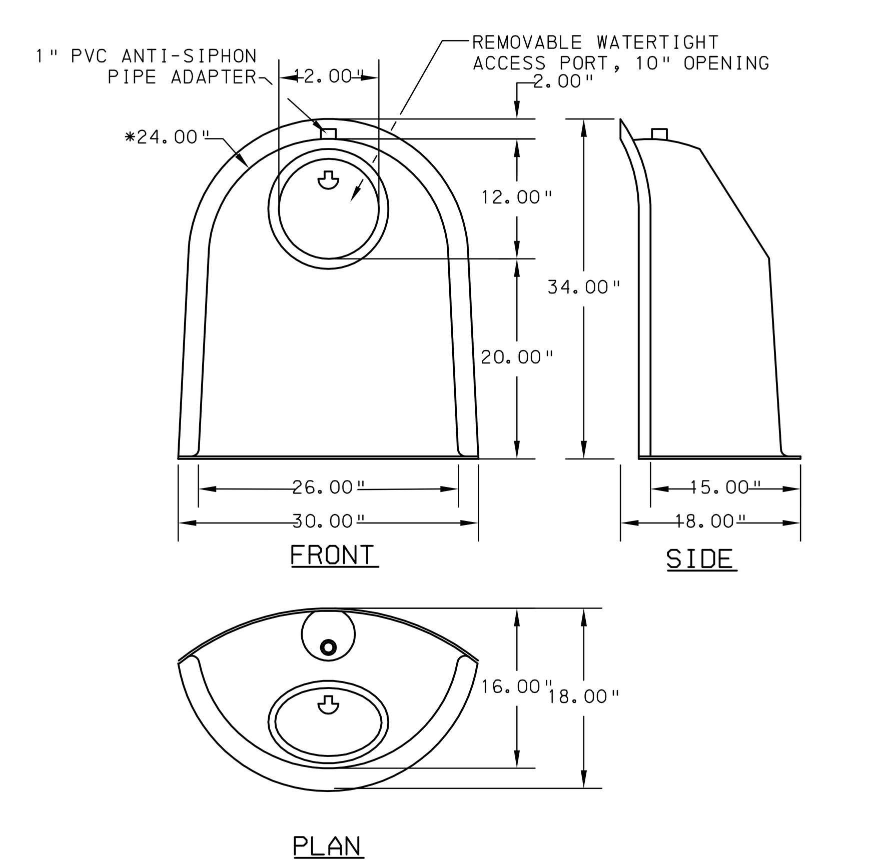

7	24R OIL & DEBRIS SNOUT DETAIL
-	NO SCALE

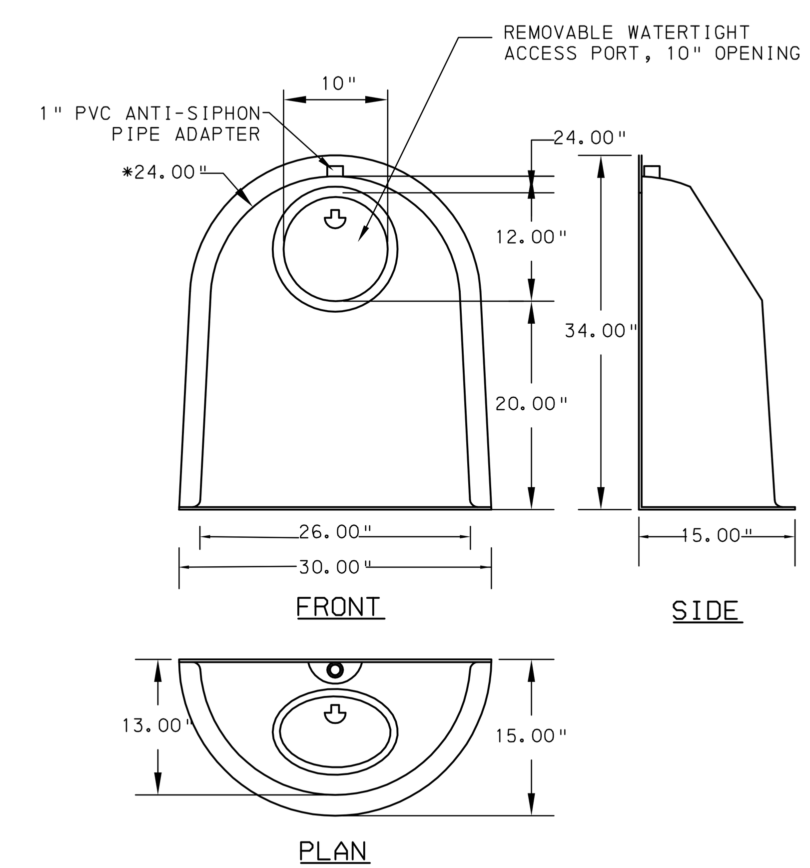

9	24F OIL & DEBRIS SNOUT DETAIL
-	NO SCALE

Pennoni

Engineers • Surveyors • Planners • Landscape Architects

DATE	NO.	REVISIONS	BY
9/15/11	1	EXCESS EARTHWORK REDUCTION AND LCD COMMENTS	DFC
11/12/10	0	INITIAL SUBMISSION	DFC

ALL DIMENSIONS MUST BE VERIFIED BY CONTRACTOR AND OWNER MUST BE NOTIFIED OF ANY DISCREPANCIES BEFORE PROCEEDING WITH THE WORK

Pennoni Associates Inc.
100 N. Wilkes-Barre Boulevard
Wilkes-Barre, PA 18702 (570) 824-2200

BELL BEND NUCLEAR POWER PLANT

SALEM TOWNSHIP, PENNSYLVANIA

EROSION AND SEDIMENTATION CONTROL DETAILS

PPL BELL BEND, LLC
38 BOMBOY LANE, SUITE 2
BERWICK, PA 18603

ALL DOCUMENTS PREPARED BY PENNONI ASSOCIATES ARE INSTRUMENTS OF SERVICE IN RESPECT OF THE PROJECT. THEY ARE NOT INTENDED OR REPRESENTED TO BE SUITABLE FOR REUSE BY OWNER OR OTHERS ON EXTENSIONS OF THE PROJECT OR ON ANY OTHER PROJECT. ANY REUSE WITHOUT WRITTEN VERIFICATION OR ADAPTATION BY PENNONI ASSOCIATES FOR THE SPECIFIC PURPOSE INTENDED WILL BE AT OWNERS SOLE RISK AND WITHOUT LIABILITY OR LEGAL EXPOSURE TO PENNONI ASSOCIATES; AND OWNER SHALL INDEMNIFY AND HOLD HARMLESS PENNONI ASSOCIATES FROM ALL CLAIMS, DAMAGES, LOSSES AND EXPENSES ARISING OUT OF OR RESULTING THEREFROM.

JOB NO. PPLS0902
SHEET 73 OF 75

SCALE N.T.S.
DRAWN BY LGB
DATE 9/15/2011
APPROVED JFM
DRAWING NO. CS8503

I:\PROJECTS\PPLS\PPLS0902–Bell Bend Land Development\DESIGN\CS\ACAD\8503.dwg
9/14/2011 9:19 AM
Ostrowski, Jenelle