Security Reintroduction into the Action Matrix

Topic for Discussion:

Recently, the NRC staff has proposed a plan to reintroduce the Security Cornerstone into the ROP/Action Matrix. Although this effort is fully supported, it does provide added urgency to resolving the issue that NRC IMC 0609 Appendix E Part I does not seem to be aligned in relation to the relative importance of non-Force on Force (FoF) security finding compared to FoF findings and findings in other areas.

The guidance in IMC 0609 Appendix E Part 1 has an inappropriate threshold for significance of SGI and other non-FoF findings. Items which should be considered minor are inappropriately classified as Green and this threshold issue continues to other significance levels.

For non-SGI findings application of Table 1 results in findings with “no consequence” or “no possible” impact being classified as Green. Finding with “no consequence” or “no possible” impact should be more appropriately classified as Minor consistent with other finding in other cornerstones. Likewise, application of the Low Consequence Table 1 designation results in classification of the findings in a manner which is inconsistent with the classification of the same finding if identified during a FoF.

Similarly, Figure 3, Decision Tree for Unsecured SGI, Step 1 results in unsecured information which “will not aid an adversary” being classified as Green when it would be more appropriately classified as Minor. This decision tree also seems to not give appropriate consideration to security plan features designed to address potential SGI loss of control in determining the significance of findings.

The current designation of the manual chapter and the associated inspection guidance as official use only seems to restrict their availability unnecessarily. IMC 0609 should be made publicly available if possible.

FAQ No.	PI	Topic	Status	Plant/Co.	Point of Contact
10-02	IE04	USwC	Approved Final 7/18/11. Was Tentatively Approved at 7/13/11 public meeting. NEI received NRC Approved-Final copy via e-mail 9/19/11. Effective Date is 10/1/11.	Generic	Jim Slider (NEI) for the ROP Task Force
10-06	MS	Cascading Unavailability	Under staff review. Tentatively Approved 7/13/11. Received question from NRC via e-mail 9/19/11.	Generic	Roy Linthicum (Exelon)
11-01	MS10	Cooling Water Boundary	Approved-Final at 7/13/11 meeting. NEI received NRC Approved-Final copy via e-mail 9/19/11. Effective Date is 1/1/12.	Generic	Jim Peschel (NextEra) Steve Vaughn (NRC)
11-04	IE03	Power Changes Needed to Recover from Loss of Equipment	Tentatively Approved at 7/13/11 public meeting. Expected to be Approved Final at 9/21/11 meeting. Awaiting NRC final response.	Generic	Robin Ritzman (First Energy) Jocelyn Lian (NRC)
11-06	MS	EDG Run Hour Reporting	Approved Final at 5/4/11 meeting and posted to NRC web site as FAQ 480. Effective date is missing from web posting. Effective Date is 1/1/12.	Generic	Roy Linthicum (Exelon)
11-07	MS	FOTP Failures	Tentatively Approved at 5/4/11 public meeting. Received NRC response 9/19/11. ROPTF has minor edits to submit to NRC 9/21/11. Effective Date is 1/1/12.	Generic	Roy Linthicum (Exelon)
11-08	MS	EDG Failure Mode Definitions	Introduced 5/4/2011. Received NRC response 9/19/11. ROPTF has suggested change to Footnote 2 to submit to NRC 9/21/11. Effective Date is 1/1/12.	Generic	Roy Linthicum (Exelon)

FAQ No.	PI	Topic	Status	Plant/Co.	Point of Contact
11-09	IE04	Crystal River-3 Extended Shutdown	Introduced 7/13/2011. Expected to be withdrawn and followed by a white paper to describe how to address PIs during long shutdowns. Received NRC draft of proposed white paper 9/19/11.	CR3/ Progress	Dennis Herrin (Progress) Tom Morrissey (NRC)
11-10	PP01	Counting of Compensatory Hours for PIDS Upgrade	Verbally introduced 7/13/11. Draft FAQ submitted to NRC via e-mail on 9/8/11.	Generic	Dave Gullott (Exelon) NRC Contact TBD
11-11	EP-03	Ft. Calhoun Alert & Notification System	Introduced and Tentatively Approved 7/13/2011. NRC Approved Final copy was received via e-mail on 8/31/11. A separate generic FAQ will be prepared to clarify NEI 99-02 guidance on external events like this one.	Generic	Erick Matzke (OPPD)

NEI Contact: James E. Slider, 202-739-8015, jes@nei.org

FAQ TEMPLATE

Plant: _Generic _____
Date of Event: __NA_____
Submittal Date: __January 21, 2010_____
Licensee Contact: __Ken Heffner_____ Tel/email: _919-270-5611/kmh@nei.org
NRC Contact: __Audrey Klett____ Tel/email: _301-415-0489/audrey.klett@nrc.gov

Performance Indicator: IE04 Unplanned Scrams with Complications

Site-Specific FAQ (Appendix D)? No

FAQ requested to become effective October 1, 2011.

Question Section

NEI 99-02 Guidance needing interpretation (include page and line citation):

NEI 99-02 Revision 6, Page 20 lines 22 to 46, page 22 lines 35-45, and page 23 lines 1-10 discuss whether or not Main Feedwater was available following an unplanned scram.

Event or circumstances requiring guidance interpretation:

When FAQ #467 was approved, the response section stated that the guidance in NEI 99-02 should be reviewed to see if it needs to be revised based on circumstances that might require the availability of feedwater beyond 30 minutes and whether consideration of the scram response time window remains an appropriate marker for judging a complication to recovery from an unplanned scram.

The purpose of this FAQ is to define what constitutes scram "response" as opposed to scram "recovery."

If licensee and NRC resident/region do not agree on the facts and circumstances explain:

In FAQ #467, the plant's recommendation was to change the guidance in two locations:

1. If operating prior to the scram, did Main Feedwater cease to operate and was it unable to be restarted during the reactor scram response? The consideration for this question is whether Main Feedwater could be used to feed the reactor vessel if necessary. When considering the availability of Main Feedwater, it should be able to be restarted within the first 30 minutes following the scram.

   The Senior Resident's response was that this guidance change would not capture those events that are of higher safety significance because main feed is not available, even if it was not required to be used, and 30 minutes is a completely arbitrary number.

2. Operations should be able to start a Main Feedwater pump and start feeding the reactor vessel with the Main Feedwater System within 30 minutes of the initial scram transient.

During startup conditions where Main Feedwater was not placed in service prior to the scram, the question would not be considered, and should be skipped.

This Senior Resident's response to this proposed change was that even if the main feed steam supply is temporarily isolated, the PI should capture those events where main feed couldn't be restored in a relatively short time. It might be different if the equipment was designed such that restoration was not possible.

Potentially relevant existing FAQ numbers:

467

Response Section

Proposed Resolution of FAQ:

The following changes to NEI 99-02, Revision 6, are proposed to clarify (1) the period considered to be the scram response and (2) guidance pertaining to the availability of the main feedwater system in the scram response:

Page 18, lines 3 – 6:
This indicator monitors that subset of unplanned automatic and manual scrams that either require additional operator actions beyond that of the ~~"~~normal~~"~~ scram or involve the unavailability of or inability to recover main feedwater. Such events or conditions have the potential to present additional challenges to the plant operations staff and therefore, may be more risk-significant than uncomplicated scrams.

Page 18, lines 9 – 12:
The USwC indicator is defined as the number of unplanned scrams while critical, both manual and automatic, during the previous 4 quarters that require additional operator actions or involve the unavailability of or inability to recover main feedwater as defined by the applicable flowchart (Figure 2) during the scram response (see definition of *scram response* in the Definitions of Terms section) and the associated flowchart questions.

Page 18, lines 17 – 18:
The number of unplanned automatic and manual scrams while critical in the previous quarter that required additional operator actions~~response~~ or involved the unavailability of or inability to recover main feedwater as determined by the flowchart criteria during the scram response.

Page 18, lines 24 – 26:
value = total unplanned scrams while critical in the previous 4 quarters that required additional operator ~~response~~ actions or involved the unavailability of or inability to recover main feedwater as defined by the applicable flowchart and the associated flowchart questions (Figure 2) during the scram response.

Page 18, to be inserted at line 33 before the definition of *unplanned scram*:

Normal Scram means any scram that is not determined to be complicated in accordance with the guidance provided in the Unplanned Scrams with Complications indicator. A normal scram is synonymous with an uncomplicated scram.

Page 18 or 19, to be inserted after the definition of *Criticality*:
Scram Response refers to the period of time that starts with the ~~onset of the initiating event~~scram and concludes when operators have completed the scram response procedures~~EOP actions~~ and the plant has achieved a stabilized condition in accordance with approved plant procedures and as demonstrated by meeting the following criteria.

For a PWR:

- Pressurizer pressure is within the normal operating pressure band.
- Pressurizer level is within the no-load pressurizer band.
- Level and pressure of all steam generators are within the normal operating bands.
- RCS temperature is within the allowable RCS no-load temperature band (T_{ave} if any RCS pump running, T_{cold} if no RCS pumps running).

For a BWR:

- No emergency operating procedure (EOP) entry conditions exist related to either the primary containment or the reactor.
- Reactor cool-down rates are less than 100 degrees F/hr.
- Reactor water level is being maintained within the range specified by plant procedures.

Page 20, lines 22 – 46:
Was Main Feedwater unavailable or not recoverable using approved plant procedures ~~following the scram~~during the scram response?

If operating prior to the scram, did Main Feedwater cease to operate and was it unable to be restarted during the reactor scram response? The consideration for this question is whether Main Feedwater could be used to feed the steam generators if necessary. The qualifier of "not recoverable using approved plant procedures" will allow a licensee to answer "No" to this question if there is no physical equipment restraint to prevent the operations staff from starting the necessary equipment, aligning the required systems, or satisfying required logic using plant procedures approved for use and in place prior to the reactor scram occurring.

The operations staff must be able to start and operate the required equipment using normal alignments and approved emergency, normal, and off-normal operating procedures to provide the required flow to~~feed~~ the minimum number of steam generators required by the EOPs ~~to satisfy the heat sink criteria~~. Manual operation of controllers/equipment, even if normally automatic, is allowed if addressed by procedure. Situations that require maintenance or repair activities or non-proceduralized operating alignments require an answer of "Yes." Additionally, the restoration of Feedwater must be capable of feeding the Steam Generators in a reasonable period of time. Operations should be able to start a Main Feedwater pump and start feeding Steam Generators with the Main Feedwater System within about 30 minutes from the time it was recognized that Main Feedwater was needed. During startup conditions where Main Feedwater was not placed in service prior to the scram this question would not be considered and should be

skipped. ~~If~~ For plants with design features or procedural prohibitions that prevent restarting Main Feedwater, this question should be answered as "No~~.~~" if MFW is free from damage or failure that would prevent it from performing its intended function and is available for use.

Page 22, lines 35 – 45, and page 23, lines 1 – 10:

Was Main Feedwater not available or not recoverable using approved plant procedures during the scram response?

If operating prior to the scram, did Main Feedwater cease to operate and was it unable to be restarted during the reactor scram response? The consideration for this question is whether Main Feedwater could be used to feed the reactor vessel if necessary. The qualifier of "not recoverable using approved plant procedures" will allow a licensee to answer "NO" to this question if there is no physical equipment restraint to prevent the operations staff from starting the necessary equipment, aligning the required systems, or satisfying required logic circuitry using plant procedures approved for use that were in place prior to the scram occurring.

The operations staff must be able to start and operate the required equipment using normal alignments and approved emergency, normal and off-normal operating procedures. Manual operation of controllers/equipment, even if normally automatic, is allowed if addressed by procedure. Situations that require maintenance or repair activities or non-proceduralized operating alignments will not satisfy this question. Additionally, the restoration of Main Feedwater must be capable of being restored to provide feedwater to the reactor vessel in a reasonable period of time. Operations should be able to start a Main Feedwater pump and start feeding the reactor vessel with the Main Feedwater System within about 30 minutes from the time it was recognized that Main Feedwater was needed. During startup conditions where main feedwater was not placed in service prior to the scram, this question would not be considered, and should be skipped.

Page H-1, lines 5 – 6:

The USwC PI will monitor the following six conditions that either have the potential to complicate the operators' scram ~~recovery~~ response actions or involve the unavailability of or inability to recover main feedwater during the scram response.

Page H-4, lines 21 – 45, and page H-5, lines 1 – 34:

H 1.5 Was Main Feedwater unavailable or not recoverable using approved plant procedures ~~following the scram~~during the scram response?

This section of the indicator is a holdover from the Scrams with Loss of Normal Heat Removal indicator which the USwC indicator ~~is~~ replaced~~ing~~. Since all PWR designs have an emergency Feedwater system that operates if necessary, the availability of the normal or main Feedwater system,~~s~~ as~~is~~ a backup in emergency situations, can be important for managing risk following a reactor scram. This portion of the indicator is designed to ~~measure~~ assess that backup availability or ability to recover main feedwater as directed by approved plant procedures (e.g., the EOPs) on a loss of all emergency Feedwater.

It is not necessary for the main Feedwater system to continue operating following a reactor trip. Some plants, by design, have certain features to prevent main feedwater from continued operation or from allowing it to be restarted unless certain criteria are met. ~~The system must be free from damage or failure that would prohibit restart of the system if necessary.~~ Since some plant designs do not include electric driven main Feedwater pumps (steam driven pumps only) it may not be possible to restart main Feedwater pumps without a critical reactor. ~~Those plants should answer this question as "No" and move on. Some~~ Additionally, some other plant designs have interlocks and signals in place to prevent feeding the steam generators with main Feedwater unless reactor coolant temperature is greater than the no-load average temperature. In both cases, these plants ~~should also answer this question as "No" and move on~~may be justified in answering this question as "No" if MFW is free from damage or failure that can prevent it from performing its intended function and is available for use.

Licensees should rely on the material condition availability of the equipment to reach the decision for this question. Condenser vacuum, cooling water, and steam pressure values should be evaluated based on the requirements to operate the pumps and may be lower than normal if procedures allow pump operation at that lower value. As long as these support systems are able to be restarted (if not running) to support main feedwater restart within the estimated 30 minute timeframe they can be considered as available. These requirements apply until the completion or exit of the scram response. ~~procedure.~~

The availability of steam dumps to the condenser does NOT enter into this indicator at all. Use of atmospheric steam dumps following the reactor trip is acceptable for any duration.

Loss of one feed pump does not cause a loss of main feedwater. Only one is needed to remove residual heat after a trip. As long as at least one pump can still operate and provide Feedwater to the minimum number of steam generators required by the EOPs to satisfy the heat sink criteria, main feedwater should be considered available.

The failure in a closed position of a feedwater isolation valve to a steam generator is a loss of feed to that one steam generator. As long as the main feedwater system is able to feed the minimum number of steam generators required by the EOPs to satisfy the heat sink criteria, the loss of ability to feed other steam generators should not be considered a loss of feedwater. Isolation of the feedwater regulating or isolation valves does not constitute a loss of feedwater if nothing prevents them from being reopened in accordance with procedures.

A Steam Generator Isolation Signal or Feedwater Isolation Signal does not constitute a loss of main feedwater as long as it can be cleared and feedwater restarted. If the isolation signal was caused by a high steam generator level, the 30-minute estimate for restart time frame should start once the high level isolation signal has cleared.

The estimated 30-minute time-frame for restart of main Feedwater was chosen based on restarting from a hot and filled condition. Since this time frame will not be measured directly, it should be an estimation developed based on the material condition of the plant's

systems following the reactor trip. If no abnormal material conditions exist, the 30 minutes should be met. If plant procedures and design would require more than 30 minutes, even if all systems were hot and the material condition of the plant's systems following the reactor trip were normal, that routine time should be used in the evaluation of this question, provided SG dry-out cannot occur on an uncomplicated trip if the time is longer than 30 minutes. The ~~opinion~~ judgment of the on-shift licensed SRO during the reactor trip should be ~~accepted~~ used in determining if this timeframe was met.

Page H-19, lines 41 – 46, and page H-20, lines 1 – 16:

H 3.5 Was Main Feedwater not available or not recoverable using approved plant procedures during the scram response?

If operating prior to the scram, did Main Feedwater cease to operate and was it unable to be restarted during the reactor scram response? The consideration for this question is whether Main Feedwater could be used to feed the reactor vessel if necessary. The qualifier of "not recoverable using approved plant procedures" will allow a licensee to answer "NO" to this question if there is no physical equipment restraint to prevent the operations staff from starting the necessary equipment, aligning the required systems, or satisfying required logic circuitry using plant procedures approved for use that were in place prior to the scram occurring.

The operations staff must be able to start and operate the required equipment using normal alignments and approved emergency, normal and off-normal operating procedures. Manual operation of controllers/equipment, even if normally automatic, is allowed if addressed by procedure. Situations that require maintenance or repair activities or non-proceduralized operating alignments will not satisfy this question. Additionally, the restoration of Main Feedwater must be capable of being restored to provide feedwater to the reactor vessel in a reasonable period of time. Operations should be able to start a Main Feedwater pump and start feeding the reactor vessel with the Main Feedwater System within about 30 minutes from the time it was recognized that Main Feedwater was needed. During startup conditions where Main Feedwater was not placed in service prior to the scram, this question would not be considered, and should be skipped.

Page H-20, lines 18 – 46, and page H-21, lines 1 – 7:

H 3.6 Following initial transient, did stabilization of reactor pressure/level and drywell pressure meet the entry conditions for EOPs?

Since BWR designs have an emergency high pressure system that operates automatically between a vessel-high and vessel-low level, it is not necessary for the Main Feedwater System to continue operating following a reactor trip. However, failure of the Main Feedwater System to be available is considered to be risk significant enough to require a "Yes" response for this PI. To be considered available, the system must be free from damage or failure that would prohibit restart of the system. Therefore, there is some reliance on the material condition or availability of the equipment to reach the decision for this question. Condenser vacuum, cooling water, and steam pressure values should be evaluated based on

the requirements to operate the pumps~~,~~ and may be lower than normal if procedures allow pump operation at that lower value.

The estimated 30 minute time~~-~~frame for restart of Main Feedwater was chosen based on restarting from a hot condition with adequate reactor water level. Since this time~~-~~frame will not be measured directly, it should be an estimation developed based on the material condition of the plants systems following the reactor trip. If no abnormal material conditions exist, the 30 minutes should be capable of being met. If plant procedures and design would require more than 30 minutes, even if all systems were hot and the material condition of the systems following the reactor trip were normal, a routine time should be used in the evaluation of this question. The ~~considered opinion~~ judgment of an on-shift licensed SRO should be used in determining if ~~in meeting~~ this time~~-~~frame is met~~acceptable~~.

When a scram occurs plant operators will enter the EOPs to respond to the condition. In the case of a routine scram the procedure entered will be exited fairly rapidly after verifying that the reactor is shutdown, excessive cooling is not in progress, electric power is available, and reactor coolant pressures and temperatures are at expected values and controlled. Once these verifications are done and the plant conditions considered "stable" (see guidance in the Definition of Terms section under *scram response*) operators will exit the initial procedure to another procedure that will stabilize and prepare the remainder of the plant for transition for the use of normal operating procedures. The plant would then be ready be maintained in Hot Standby, to perform a controlled normal cool down, or to begin the restart process. The criteria in this question is used to verify that there were no other conditions that developed during the stabilization of the plant in the scram response related vessel parameters that required continued operation in the EOPs or re-entry into the EOPs or transition to a follow-on EOP. Maintaining operation in EOPs that are not related to vessel and drywell parameters do not count in this PI.

NRC Response:

NRC staff agrees with the proposed resolution and an effective date of October 1, 2011, meaning that the FAQ resolution will begin to be applied to 4Q2011 data that will be reported in January 2012.

NRC Comments for September 21, 2011, meeting
FAQ 10-06, Cascaded Unavailability

Plant:	**Generic**
Date of Event:	**N/A**
Submittal Date:	**Proposed as 5/4/11**
Licensee Contact:	**Roy Linthicum, 630-657-3846, roy.linthicum@exeloncorp.com**
NRC Contact:	**TBD**
Performance Indicator:	**Mitigating Systems**
Site Specific FAQ:	**No**

FAQ requested to become effective: 10/01/2011

Question Section:

Clarification in the guidance is needed for what constitutes cascaded unavailability. NEI 99-02 section 2.2, Mitigating System Performance Index, pages 31-36, provide the guidance on how to properly administer and report this performance indicator. On page 34, under the Monitored Systems section, line 37 states explicitly "No support systems are to be cascaded onto the monitored systems, e.g., HVAC room coolers, DC power, Instrument Air, etc."

Appendix F section 2.1.3 provides guidance on how to define the boundaries of frontline system monitored components and support system components for the Unreliability element of MSPI. While this guidance could reasonably be extended to the unavailability section, there are no explicit statements regarding the definition of boundaries between frontline systems and support systems in the Unavailability element of MSPI.

Additional guidance/clarification should be provide to define the frontline system and support system boundaries for the unavailability element of MSPI to ensure the "no cascading of unavailability" clause is met and unavailability is accurately reported?

Guidance needing clarification/interpretation:

Appendix F, section 1.2.1 regarding the establishment of boundaries between frontline and support system components for reporting unavailability should be revised to be consistent with the "No cascading of unavailability" clause from page 34.

Page F-6 "No Cascading of Unavailability" section should be clarified. Currently, all examples in this section refer to disabling a function of a monitored piece of equipment for protection when a support system is out of service. This could lead to an interpretation that these examples are the only conditions applicable to the "no cascading clause" on page 34.

Page F-29 "Failures and Discovered Conditions of Non-Monitored Structures, Systems, and Components" should be revised to be consistent with the guidance of page 34 for no cascading of support systems onto monitored systems, specifically lines 20 – 23 … "An example could be a manual suction isolation valve left closed which would have caused a pump to fail. This would

Contents Revised 5/3/2011
Reformatted 7/8/2011

not be counted as a failure of the pump. Any mis-positioning of the valve that caused the train to be unavailable would be counted as unavailability from the time of discovery." This example does not indicate whether the mis-positioned valve was inside or outside the monitored system boundary, which introduces confusion. This example should include a statement that the mis-positioned valve is inside the monitored system boundary.

Event requiring guidance interpretation: N/A

NRC Resident Inspector Position: TBD

If licensee and NRC resident/region do not agree on the facts and circumstances explain: NA

Potentially relevant existing FAQ numbers: NA

Response Section:

Proposed Resolution of FAQ:
The following guidance changes should be made to NEI 99-02.

Licensee proposed wording changes:

Page 31 (existing):
Unavailability is the ratio of the hours the train/system was unavailable to perform its monitored functions (as defined by PRA success criteria and mission times) due to planned and unplanned maintenance or test during the previous 12 quarters while critical to the number of critical hours during the previous 12 quarters.

Page 31 (revised):
Unavailability is the ratio of the hours the train/system was unavailable to perform its monitored functions (as defined by the train/system boundaries, PRA success criteria and mission times) due to planned and unplanned maintenance or test during the previous 12 quarters while critical to the number of critical hours during the previous 12 quarters.

Page 33 (existing):
Definition of Terms

Risk Significant Functions*:* those at power functions, described in the Appendix F section "Additional Guidance for Specific Systems," that were determined to be risk-significant in accordance with NUMARC 93-01, or NRC approved equivalents (e.g., the STP exemption request). The risk significant system functions described in Appendix F, "Additional Guidance for Specific Systems" should be modeled in the plant's PRA/PSA. System and equipment performance requirements for performing the risk significant functions are determined from the PRA success criteria for the system.

Page 33 (revised):
Definition of Terms

Risk Significant Functions: those at power functions, described in the Appendix F section "Additional Guidance for Specific Systems," that were determined to be risk-significant in accordance with NUMARC 93-01, or NRC approved equivalents (e.g., the STP exemption request). The risk significant system functions described in Appendix F, "Additional Guidance for Specific Systems" should be modeled in the plant's PRA/PSA. System and equipment performance requirements for performing the risk significant functions are determined from the PRA success criteria, mission times, and boundaries for the system.

Page 34 (existing):
Monitored Systems

Systems have been generically selected for this indicator based on their importance in preventing reactor core damage. The systems include the principal systems needed for maintaining reactor coolant inventory following a loss of coolant accident, for decay heat removal following a reactor trip or loss of main feedwater, and for providing emergency AC power following a loss of plant off-site power. One support function (cooling water support system) is also monitored. The cooling water support system monitors the cooling functions provided by service water and component cooling water, or their direct cooling water equivalents, for the four front-line monitored systems. No support systems are to be cascaded onto the monitored systems, e.g., HVAC room coolers, DC power, instrument air, etc.

Page 34 (revised):
Monitored Systems

Systems have been generically selected for this indicator based on their importance in preventing reactor core damage. The systems include the principal systems needed for maintaining reactor coolant inventory following a loss of coolant accident, for decay heat removal following a reactor trip or loss of main feedwater, and for providing emergency AC power following a loss of plant off-site power. One support function (cooling water support system) is also monitored. The cooling water support system monitors the cooling functions provided by service water and component cooling water, or their direct cooling water equivalents, for the four front-line monitored systems. Other support systems (e.g., HVAC room coolers, DC power, instrument air, etc.) will not be cascaded onto the monitored systems' unavailability or reliability data. For the purposes of MSPI, a failure of a support system component that is outside the system and train boundary of a monitored system will not result in unavailability of a monitored train or failure of a monitored component.

Page F-1 (existing):
F.1.1.1 Monitored Functions and System Boundaries

The first step in the identification of system trains is to define the monitored functions and system boundaries. Include all components within the system boundary that are required to satisfy the monitored functions of the system.

Page F-1 (revised):

F.1.1.1 Monitored Functions and System Boundaries

The first step in the identification of system trains is to define the monitored functions and system boundaries. Include all components within the system boundary that are required to satisfy the monitored functions of the system.

The cooling water support system is a system that is calculated separately in MSPI; however, trains/segments of other ~~S~~support systems (e.g., HVAC room coolers, DC power, instrument air, etc.) that may be needed to satisfy a monitored function are not monitored in MSPI for unavailability if the components within those trains/segments are not included within the boundary of a monitored train/segment or the supported system~~; however, the system boundary between the frontline system and the support systems should be considered to be defined as shown in Table 2 and shown in figures F-1 through F-4~~.

Additional guidance for determining the impact on availability and unreliability from unmonitored component failures can be found in Section F.2.2.2.

Comment [A1]: NRC staff will need clarification as to why Table 2, which is used for URI, is being referenced to establish system boundaries for determining UAI. It doesn't appear to be used elsewhere in UAI guidance.

Page F-2 (existing):

Water Sources and Inventory

Water tanks are not considered to be monitored components. As such, they do not contribute to URI. However, periods of insufficient water inventory contribute to UAI if they result in loss of the monitored train function for the required mission time. If additional water sources are required to satisfy train mission times, only the connecting active valve from the additional water source is considered as a monitored component for calculating UAI. If there are valves in the primary water source that must change state to permit use of the additional water source, these valves are considered monitored and should be included in UAI for the system.

Page F-2 (revised):

Water Sources and Inventory

Water tanks are not considered to be monitored components. As such, they do not contribute to URI. However, since tanks can be in the train boundary, periods of insufficient water inventory contribute to UAI if they result in loss of the monitored train function for the required mission time. If additional water sources are required to satisfy train mission times, only the connecting active valve from the additional water source is considered as a monitored component for calculating UAI. If there are valves in the primary water source that must change state to permit use of the additional water source, these valves are considered monitored and should be included in UAI for the system.

Page F-5 (existing):

Unplanned unavailable hours: These hours include elapsed time between the discovery and the restoration to service of an equipment failure or human error (such as a misalignment) that makes the train unavailable. Time of discovery of a failed monitored component is when the licensee determines that a failure has occurred or when an evaluation determines that the train would not have been able to perform its monitored function(s). In any case where a monitored component has been declared inoperable due to a degraded condition, if the component is

considered available, there must be a documented basis for that determination, otherwise a failure will be assumed and unplanned unavailability would accrue. If the component is degraded but considered operable, timeliness of completing additional evaluations would be addressed through the inspection process. Unavailable hours to correct discovered conditions that render a monitored component incapable of performing its monitored function are counted as unplanned unavailable hours. An example of this is a condition discovered by an operator on rounds, such as an obvious oil leak, that was determined to have resulted in the equipment being non-functional even though no demand or failure actually occurred. Unavailability due to mis-positioning of components that renders a train incapable of performing its monitored functions is included in unplanned unavailability for the time required to recover the monitored function.

Page F-5 (revised):
Unplanned unavailable hours: These hours include elapsed time between the discovery and the restoration to service of an equipment failure or human error (such as a misalignment) that makes the train unavailable. Time of discovery of a failed monitored component is when the licensee determines that a failure has occurred or when an evaluation determines that the train would not have been able to perform its monitored function(s). In any case where a monitored component has been declared inoperable due to a degraded condition, if the component is considered available, there must be a documented basis for that determination, otherwise a failure will be assumed and unplanned unavailability would accrue. If the component is degraded but considered operable, timeliness of completing additional evaluations would be addressed through the inspection process. Unavailable hours to correct discovered conditions that render a monitored train incapable of performing its monitored function are counted as unplanned unavailable hours. An example of this is a condition discovered by an operator on rounds, such as an obvious oil leak, that was determined to have resulted in the equipment being non-functional even though no demand or failure actually occurred. Unavailability due to mis-positioning of components that renders a train incapable of performing its monitored functions is included in unplanned unavailability for the time required to recover the monitored function.

Page F-6 (existing):
No Cascading of Unavailability: In some cases plants will disable the autostart of a supported monitored system when the support system is out of service. For example, a diesel generator may have the start function inhibited when the service water system that provides diesel generator cooling is removed from service. This is done for the purposes of equipment protection. This could be accomplished by putting a supported system in "maintenance" mode or by pulling the control fuses of the supported component. If no maintenance is being performed on a supported component and it is only disabled for equipment protection due to a support system being out of service, no unavailability should be reported for the train/segment.
If, however, maintenance is performed on the monitored component, then the unavailability must be counted.

For example, if an Emergency Service Water train/segment is under clearance, and the autostart of the associated High Pressure Safety Injection (HPSI) pump is disabled, there is no unavailability to be reported for the HPSI pump. If a maintenance task to collect a lube oil sample is performed and it can be performed with no additional tag out, no unavailability has to be reported for the HPSI pump. If however, the sample required an additional tag out that would

make the HPSI pump unavailable, then the time that the additional tag out was in place must be reported as planned unavailable hours for the HPSI pump.

Page F-6 (revised):
No Cascading of Unavailability: The failure or unavailability of an SSC that is not within the boundary of the monitored MSPI system that it supports does not cause the supported monitored system to accrue unavailability. ~~There is no cascading of unavailability from support system components to monitored trains or segments. A~~ Although such a failure or condition ~~of a support system component~~ may require a monitored train or segment of the supported system to be declared ~~I~~inoperable, the monitored train or segment of the supported system would not accrue unavailability. If the monitored component of the supported system is rendered non-functional through tag out or physical plant conditions (other than as discussed below), then unavailable time should be accrued for the monitored train or segment of the supported system. Otherwise, unavailability is not accrued.

~~In some cases p~~Plants will sometimes disable the autostart of a supported monitored system when ~~the~~ its support system is out of service. For example, a diesel generator may have the start function inhibited when the service water system that provides diesel generator cooling is removed from service. This is done for the purposes of equipment protection. This could be accomplished by putting a supported system's monitored train/segment in "maintenance" mode or by pulling the control fuses of the supported monitored component. If no maintenance is being performed on a ~~supported~~ component that's within a supported system's~~a~~ monitored train/segment, and ~~it~~ the supported system's train/segment is only ~~disabled for equipment protection due to~~ unavailable because of a monitored support system being out of service, no unavailability should be reported for the supported system's train/segment. If, however, maintenance is performed on the supported system's monitored train/~~ or~~ segment, then the unavailability must be counted.

For example, if an Emergency Service Water (ESW) train/segment (i.e., a monitored support system train/segment) is ~~under clearance~~unavailable, and the autostart of the associated High Pressure Safety Injection (HPSI) pump (a monitored supported system) is disabled, there is no unavailability to be reported for the HPSI pump; however, the ESW train/segment does accrue unavailability. If a maintenance task to collect a lube oil sample is performed and it can be performed with no additional tag out, no unavailability has to be reported for the HPSI pump. If however, the sample required an additional tag out that would make the HPSI pump unavailable, then the time that the additional tag out was in place must be reported as planned unavailable hours for the HPSI pump.

Page F-29 (existing):
Failures and Discovered Conditions of Non-Monitored Structures, Systems, and Components (SSC)

Failures of SSCs that are not included in the performance index will not be counted as a failure or a demand. Failures of SSCs that would have caused an SSC within the scope of the performance index to fail will not be counted as a failure or demand. An example could be a manual suction isolation valve left closed which would have caused a pump to fail. This would

not be counted as a failure of the pump. Any mis-positioning of the valve that caused the train to be unavailable would be counted as unavailability from the time of discovery. The significance of the mis-positioned valve prior to discovery would be addressed through the inspection process. (Note, however, in the above example, if the shut manual suction isolation valve resulted in an actual pump failure, the pump failure would be counted as a demand and failure of the pump.)

Failures and Discovered Conditions of Non-Monitored Structures, Systems, and Components (SSC)

Page F-29 (revised):
~~For non-monitored SSCs within the boundary of the frontline system, failures of SSCs that are not included in the performance index will not be counted as a failure or a demand. Failures of SSCs that would have caused an SSC within the scope of the performance index to fail will not be counted as a failure or demand.~~ Unmonitored components within a monitored train/segment boundary do not contribute to unreliability. If an unmonitored component within a monitored train/segment fails, unreliability is not accrued if the unmonitored component does not cause an actual demand and/or failure of a monitored component within the monitored train/segment. If the unmonitored component causes a monitored component within the monitored train/segment to actually fail when demanded, then the monitored component demand and failure are counted for unreliability. The failure of an unmonitored component within a monitored train/segment can cause unavailability of that train/segment to be counted if the train/segment is rendered unavailable.

Unmonitored components outside a monitored train/segment boundary do not contribute to unreliability of monitored components or to unavailability of the monitored train/segment. If an unmonitored component outside a monitored train/segment fails, unreliability is not accrued regardless whether the unmonitored component causes an actual demand and/or failure of a monitored component. The failure of an unmonitored component outside a monitored train/segment cannot cause unavailability of that train/segment to be counted.

~~An example could be~~For example, a manual suction isolation valve (an unmonitored component within the train boundary) is left closed, which would have caused a pump to fail. Th~~is~~e closed valve would not be counted as a failure of the pump, nor would unavailability be accrued. Any mis-positioning of the valve that caused the train to be unavailable would be counted as unavailability from the time of discovery. The significance of the mis-positioned valve prior to discovery would be addressed through the inspection process. (Note, however, in the above example, if the shut manual suction isolation valve resulted in an actual pump failure, the pump failure would be counted as a demand and failure of the pump and unplanned unavailability would be counted against the appropriate train/segment.)

Page F-50 (revised):
PWR Auxiliary Feedwater Systems

Scope

NRC Comments for September 21, 2011, meeting
FAQ 10-06, Cascaded Unavailability

The function of the AFW system is to provide decay heat removal via the steam generators to cool down and depressurize the reactor coolant system following a reactor trip. The mitigation of ATWS events with the AFW system is not considered a function to be monitored by the MSPI. (Note, however, that the FV values will include ATWS events).

The function monitored for the indicator is the ability of the AFW system to autostart, take a suction from a water source (typically, the condensate storage tank and if required to meet the PRA success criteria and mission time, from an alternate source), and to inject into at least one steam generator.

The scope of the auxiliary feedwater (AFW) or emergency feedwater (EFW) systems includes the pumps, the condensate storage tank (CST), ~~and~~ the components in the flow paths ~~from the condensate storage tank and~~between the pumps and CST, and if required, the valve(s) that connect the alternative water source to the auxiliary feedwater system. The flow path for the steam supply to a turbine driven pump is included from the steam source (main steam lines) to the pump turbine. Pumps included in the Technical Specifications (subject to a Limiting Condition for Operation) are included in the scope of this indicator. Some initiating events, such as a feedwater line break, may require isolation of AFW flow to the affected steam generator to prevent flow diversion from the unaffected steam generator. This function should be considered a monitored function if it is required.

NRC Final Response for

FAQ TEMPLATE

FAQ 11-01: Cooling Water Boundary (Generic)

Plant: Generic
Date of Event: NA
Submittal Date: 01/20/11
Licensee Contact: Jim Peschel, Tel/email: 603.773.7194/james_peschel@nexteraenergy.com
NRC Contact: Steve Vaughn, Tel/email: 301.415.3640/stephen.vaughn@nrc.gov

Performance Indicator: MS-10, Mitigating System Performance Index (Cooling Water Systems)

Site Specific FAQ (Appendix D)? No

FAQ requested to become effective: October 1, 2011

Question Section

NEI 99-02, Rev. 6, provides guidance for the cooling water system scope on pages F-52 and F-53. The text from page F-53, lines 2 through 7, highlighted in italics below, indicates that only the last valve in a cooling water system line is included in the boundary of the monitored component. While this may be correct in most applications, there are plant configurations where a cooling water system line running to a monitored system (EDG for example) has more than one isolation valve (e.g., manual isolation valve(s)). If the isolation valve(s) were closed it would only result in supported train unavailability and would not affect the availability of the cooling water system. However, the guidance on page F-53, lines 2 through 7, could lead one to the opposite conclusion and suggest that the cooling water system would be unavailable.

NEI 99-02, Rev. 6, Page F-53, lines 1 through 9:

> Systems that provide this function typically include service water and component cooling water or their cooling water equivalents. *Pumps, valves, heat exchangers and line segments that are necessary to provide cooling to the other monitored systems are included in the system scope up to, but not including, the last valve that connects the cooling water support system to components in a single monitored system. This last valve is included in the other monitored system boundary. If the last valve provides cooling to SSCs in more than one monitored system, then it is included in the cooling water support system.* Service water systems are typically open "raw water" systems that use natural sources of water such as rivers, lakes or oceans. Component Cooling Water systems are typically closed "clean water" systems.

Question - Should a cooling water system isolation valve(s) in a line supplying a single monitored component be included in the monitored train's system boundary?

The industry and the NRC agree on the issue and question as described above.

Response Section

Response – Yes, a cooling water system isolation valve(s) in a line supplying a single monitored train should be included in the monitored train's system boundary.

Revise NEI 99-02, Rev. 6, Page F-52, lines 40 through 43, and Page F-53, lines 1 through 9, to read as follows:

> The functions monitored for the cooling water support system are those functions that are necessary (i.e. Technical Specification-required) to provide for direct cooling of the components in ~~the other~~ monitored ~~systems~~trains or segments of systems supported by the cooling water system. It does not include indirect cooling provided by room coolers or other HVAC features.
>
> Systems that provide this function typically include service water and component cooling water or their cooling water equivalents. Service water systems are typically open "raw water" systems that use natural sources of water such as rivers, lakes, or oceans. Component cooling water systems are typically closed "clean water" systems.
>
> Pumps, valves, heat exchangers and line segments that are necessary to provide cooling to ~~the other~~ monitored ~~systems~~ trains or segments of system(s) supported by the cooling water system are included within the cooling water system ~~scope~~ boundary up to, but not including, the ~~last~~ isolation valve(s) that connects the cooling water ~~support~~ system to components in a single monitored ~~system~~ train or segment of the supported system. This ~~last~~ isolation valve is included within the ~~other~~ boundary of the monitored ~~system~~ train or segment of the supported system~~boundary~~. ~~If the~~The last valve(s) that provides cooling to SSCs in more than one monitored ~~system or train~~train or segment of supported system(s)~~, then it~~ is included within the boundary of the cooling water ~~support~~ system. All valves (e.g., manual isolation valves or motor operated valves) in a cooling water line to a single monitored train or segment of a supported system are included within the boundary of the monitored train or segment of the supported system. Figure F-6 depicts this concept and the treatment of multiple isolation valves. The SSCs outside the dashed boxes are included within the boundary of the cooling water system. The SSCs within the dashed boxes are included within the boundaries of the supported systems.~~Service water systems are typically open "raw water" systems that use natural sources of water such as rivers, lakes or oceans. Component Cooling Water systems are typically closed "clean water" systems.~~

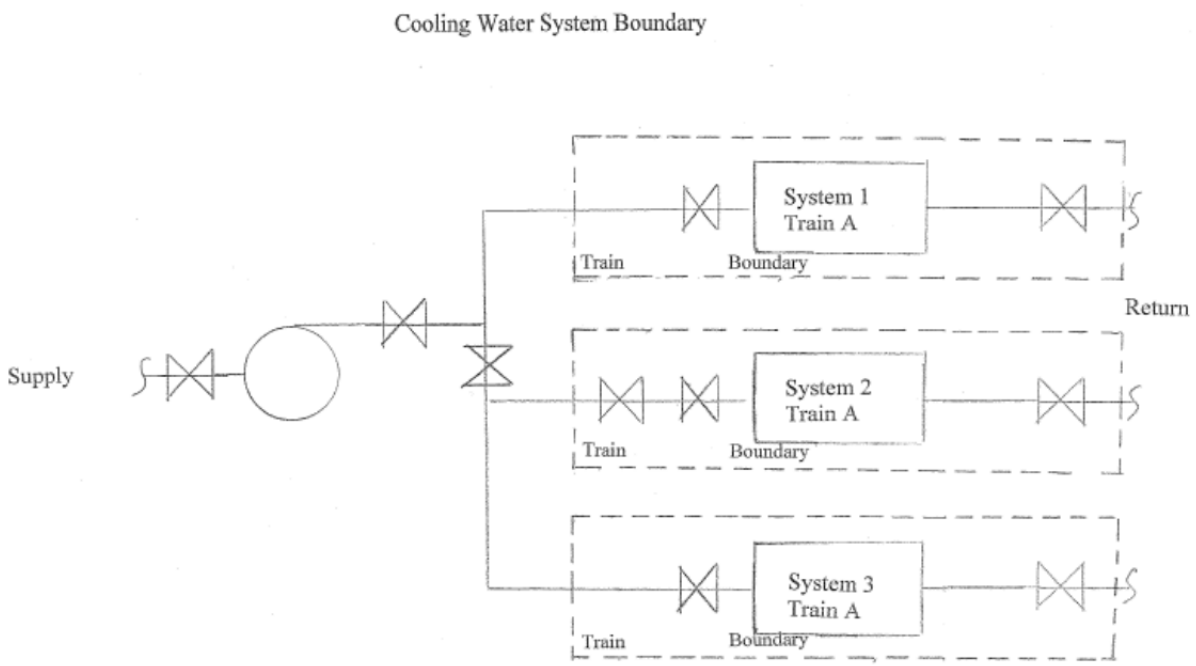

Figure F-6

NRC Response:

NRC staff agrees with the proposed resolution. The effective date will be January 1, 2012, meaning that the resolution will begin to be applied to 1Q2012 data that is reported to NRC in April 2012.

NRC Final Response for

FAQ TEMPLATE

FAQ 11-04

Power Changes Needed to Recover from Loss of Equipment

Revised to Reflect Agreement to Extend Effective Date to October 1, 2011

Plant: Generic
Date of Event: June 4, 2010
Submittal Date: January 20, 2011
Contact: Robin Ritzman **Tel/email:** 330-384-5414 rritzman@firstenergycorp.com
NRC Contact: Jocelyn Lian **Tel/email:** 301-415-4666 Jocelyn.Lian@nrc.gov

Performance Indicator: IE03 Unplanned Power Changes per 7,000 Critical Hours

Site-Specific FAQ (Appendix D)? No

FAQ requested to become effective ~~When approved.~~October 1, 2011

Question Section

NEI 99-02 Guidance needing interpretation (include page and line citation):
Page 13, Lines 24 – 29
Event or circumstances requiring guidance interpretation:

At 0707 hours on June 4, 2010, the Perry Plant entered single loop operation (SLO) when reactor recirculation pump A tripped OFF due to a failed optical isolator card. Reactor power in SLO was approximately 58% RTP. This power change is counted under the unplanned power change PI because the power change was greater than 20% (100% to 58%) and was initiated less than 72 hours following discovery of the off-normal condition.

After replacing the optical isolator card, power reduction to approximately 21% was necessary to establish reactor conditions necessary to restart reactor recirculation pump A and commence power ascension. The power reduction began at 2220 hours on June 4, 2010 and ended at 1827 hours on June 5, 2010. The second power reduction was also counted as an unplanned power change because the power change was greater than 20% (58% to 21%) and was initiated less than 72 hours following discovery of the off-normal condition.

The question being asked in this case is whether the second power reduction should be counted as a separate occurrence. Clearly, the second power reduction was implemented to address the initial condition (i.e., reactor recirculation pump A trip). It is not desirable for a boiling water reactor (BWR) to operate in SLO for long periods of time, although SLO is a licensed operating mode. The reactor has to be brought to a condition with adequate margins to thermal limits and stability in order to re-start the non-operating recirculation pump after repairs are completed. In this case, a power reduction is necessary to reach this condition. The operating recirculation pump has to be transferred to slow speed. Then, the non-operating pump is started in slow speed at

the desired power level. Power ascension may commence with both pumps running in slow speed.

The Unplanned Power Changes per 7,000 Critical Hours PI monitors the number of unplanned power changes that could have, under other plant conditions, challenged safety functions. Operating in SLO in accordance with Technical Specifications does not challenge nuclear safety or is in itself, risk-significant. Therefore, a second power reduction to recover a non-operating recirculation pump does not appear to be within the intent of the PI.

The guidance on NEI 99-02 page 14 lines 23 through 30 and beginning on line 42 indicates that power changes resulting from proper implementation of preexisting procedural guidance which are not in response to an equipment failure or personnel error are not meant to be counted by this indicator. This is in direct contrast to power changes resulting from equipment failures or personnel errors. Consistent with this guidance, power changes to restore equipment to service in accordance with approved procedures do not count. This exception does not apply to downpowers that are conducted to perform corrective maintenance.

Guidance in NEI 99-02 is requested to clarify reporting criteria for situations similar to the Perry event, where a power reduction is required to place equipment in service, such as to recover a non-operating reactor recirculation pump. No clarification is needed for the initial trip to enter SLO which will be counted and reported under the PI.

If licensee and NRC resident/region do not agree on the facts and circumstances, explain
The NRC resident inspector agrees with the facts as stated in the FAQ. In the Perry case that initiated this FAQ, both unplanned power changes were reported. The NRC inspector believes that NEI 99-02, as written, requires two unplanned power changes to be reported.

Potentially relevant existing FAQ numbers
None identified.

Response Section

Proposed Resolution of FAQ
Power changes implemented less than 72 hours from time of discovery, in accordance with approved procedures, for the purpose of placing equipment in service, such as restarting a non-operating reactor recirculation pump in a BWR plant or a heater drain pump, should not be reported under this PI. The initiating event or condition that resulted in the need to restore the equipment is the event that is evaluated under this PI.

If appropriate, provide proposed rewording of guidance for inclusion in next revision.
Add to Clarifying Notes for Unplanned Power Changes per 7,000 Critical Hours in NEI 99-02, page 14:

Current Guidance:

16 Unplanned power changes and shutdowns include those conducted in response to equipment
17 failures or personnel errors and those conducted to perform maintenance. They do not include
18 automatic or manual scrams or load-follow power changes.

Add the following to the end of the sentence on line 17:

> Power changes to restore equipment to service in accordance with approved procedures are excluded.

Current Guidance:

23 Unplanned power changes include runbacks and power oscillations greater than 20% of full
24 power. A power oscillation that results in an unplanned power decrease of greater than 20%
25 followed by an unplanned power increase of 20% should be counted as two separate PI events,
26 unless the power restoration is implemented using approved procedures. For example, an
27 operator mistakenly opens a breaker causing a recirculation flow decrease and a decrease in
28 power of greater than 20%. The operator, hearing an alarm, suspects it was caused by his action
29 and closes the breaker resulting in a power increase of greater than 20%. Both transients would
30 count since they were the result of two separate errors (or unplanned/non-proceduralized action).

Add the following to the end of line 30:

> Alternately, if the power change is implemented to restore equipment to service and is performed using an approved procedure, the power change(s) (increases or decreases) to restore the equipment to service would not count against this indicator. For example, in BWRs, a power reduction for the purpose of re-starting a recently tripped reactor recirculation pump to re-establish two-loop operation is excluded if the initial power reduction is caused by the recirculation pump trip. The second power reduction to recover the tripped recirculation pump does not count if it is implemented by an approved procedure in response to the initial condition.

NRC Response to FAQ:

The staff agrees with the Proposed Resolution of FAQ and an effective date of October 1, 2011, meaning that the FAQ resolution will begin to be applied to 4Q2011 data to be reported to NRC in January 2012.

Plant: **Generic**
Date of Event: **N/A**
Submittal Date: **2/16/11**
Licensee Contact: **Roy Linthicum, 630-657-3846, roy.linthicum@exeloncorp.com**
NRC Contact: **Steve Vaughn**
Performance Indicator: **Mitigating Systems**
Site Specific FAQ: **No**
FAQ requested to become effective: October 1, 2011

Question Section:

NEI 99-02 section F.2.2.1, Mitigating System Performance Index, page F-20, provides the guidance for counting EDG run hours. During initiate implementation of MSPI, it was decided to include the 1st hour of run time for the EDGs in the run hours calculations, even though failures within the 1st hour or operation are either EDG demand or Load/Run failures, as it was expected to result in a small impact to the calculated . A recent investigation (ML 101580244) concluded that in order to maintain the industry generic failure rates used as a comparison for MSPI, the 1st hour of operation for the EDGs must be **excluded** from the run hours calculations. Inclusion of the 1st hour or operation results in almost a factor of 1.5 reduction in the industry prior failure rate used for MSPI.

The impact of not counting the 1st hour of operation on historical MSPI reporting identified that excluding the 1st hour of operation from the EDG run hours would not have resulted in any change in indicator color. Therefore, this change will be made for future reporting only.

Guidance needing clarification/interpretation:

Revise NEI 99-02 section F.2.2.1 and F.2.2.2 eliminate the addition of the 1st hour of EDG operation from the run hour data that is input into the CDE database.

Event requiring guidance interpretation:

N/A. This FAQ is for general guidance improvement and does not address a specific event.

NRC Resident Inspector Position:

The NRC is in agreement with the need to revise guidance on MSPI EDG run hour reporting.

If licensee and NRC resident/region do not agree on the facts and circumstances explain:

NA.

Potentially relevant existing FAQ numbers: NA

Response Section:

Proposed Resolution of FAQ:
It is recommended that the following proposed wording changes or changes with equivalent meaning be incorporated into NEI 99-02.

Licensee proposed wording changes:

Bolded and underlined phrases indicate proposed changes, strike-throughs indicate deletions.

Page F-21: Lines 27 – 32

Run hours (pumps and emergency power generators only) are defined as the time the component is operating. **For pumps, r**~~R~~un hours include the first hour of operation of the component. **For EDGs, exclude all hours before the output breaker is closed (or EDG hours when the EDG is run unloaded) and the first hour after the breaker is closed (the first hour of operation after the breaker is closed is considered part of the load/run demand).** Exclude post maintenance test run hours, unless in case of a failure, the cause of the failure was independent of the maintenance performed. In this case, the run hours may be counted as well as the failure. Pumps that remain running for operational reasons following the completion of post maintenance testing, accrue run hours from the time the pump was declared operable.

NRC Response to FAQ:

NRC staff agrees with the proposed changes. The FAQ resolution will begin to be applied to 1Q2012 data that are reported to the NRC in April 2012.

FAQ 11-07, FOTP ~~Failures~~

Plant:	**Generic**
Date of Event:	**N/A**
Submittal Date:	**3/30/11**
Licensee Contact:	**Roy Linthicum, 630-657-3846, roy.linthicum@exeloncorp.com**
NRC Contact:	**Steve Vaughn**
Performance Indicator:	**Mitigating Systems**
Site Specific FAQ:	**No**

FAQ requested to become effective: October 1, 2011 and concurrent with FAQ 11-08

Question Section:

NEI 99-02 section F.5 page F-45 provides inconsistent treatment of EDG Fuel Oil Transfer pumps (FOTPs). The FOTPs are identified as being within the system boundary but are not monitored components nor do they contribute to the unavailability unless there is only one pump per EDG. As noted in the guidance, the reason for this treatment is that the FOTP contribution to MSPI was expected to be small. Additional investigation has shown that for some plant configurations, the contribution from the FOTPs could be significant, based on plant design details such as number of pumps, number of EDGs, Day Tank Capacity, cross connect capability, etc. Therefore, appropriate consideration of the FOTPs in MSPI is needed.

Several options for adding the FOTPs to MSPI were investigated, including added the pumps as separate monitored components or considering them within the boundary of the EDG super-component. Based on limitations of the current Consolidated Data Entry software design, it was determined that inclusion of the FOTPs as being with the EDG super-component boundary is the most cost effective option available.

Guidance needing clarification/interpretation:

Revise NEI 99-02 section F.5 and Figure F-1 to include the Fuel Oil Transfer Pumps within the EDG super-component boundary.

Event requiring guidance interpretation:

N/A. This FAQ is for general guidance improvement and does not address a specific event.

NRC Resident Inspector Position:

The NRC is in agreement with the need to revise guidance on the treatment of Fuel Oil Transfer Pumps.

If licensee and NRC resident/region do not agree on the facts and circumstances explain:

NA.

Potentially relevant existing FAQ numbers: NA

Response Section:

Proposed Resolution of FAQ:

It is recommended that the following proposed wording changes ~~or changes with equivalent meaning~~ be incorporated into NEI 99-02.

Licensee proposed wording changes:

Bolded, italicized, and underlined phrases indicate proposed changes, and strike-throughs indicate deletions.

Page F-17: Line 37

1) INCLUDE all pumps (except EDG fuel oil transfer pumps ***which are part of the EDG super component***) and diesels

Page F-19, Table 2

The diesel generator boundary includes the generator body, generator actuator, lubrication system (local), fuel system (local), ***fuel oil transfer pumps/valves***, cooling components (local), startup air system receiver, exhaust and combustion air system, dedicated diesel battery (which is not part of the normal DC distribution system), individual diesel generator control system, cooling water isolation valves, circuit breaker for supply to safeguard buses and their associated control circuit (relay contacts for normally auto actuated components, control board switches for normally operator actuated components[1]).

Page F-45: Line 33 – Page F-46 Line 2

The EDG component boundary includes the generator body, generator actuator, lubrication system (local), fuel system (local or day tank ***and fuel oil transfer pumps/valves***), cooling components (local), startup air system receiver, exhaust and combustion air system, dedicated diesel battery (which is not part of the normal DC distribution system), individual diesel generator control system, cooling water isolation valves, circuit breaker for supply to safeguard buses and their associated control circuit. Air compressors are not part of the EDG component boundary.

The fuel transfer pumps required to meet the PRA mission time are within the ***EDG component*** ~~system~~ boundary but are not considered to be a ***separate*** monitored component for reliability monitoring in the EDG system. Additionally they are monitored for contribution to train unavailability ~~only~~ if ***the fuel oil transfer pump(s) is (are) required to meet the EDG mission time (as specified in Section F.2.2.2 and as defined in the MSPI Definition of Terms section)***.~~an EDG train can only be supplied from a single transfer pump. Where the capability exists to supply an EDG from redundant transfer pumps, the contribution to the EDG MSPI from these components is expected to be small compared to the contribution from the EDG itself. Monitoring the transfer pumps for reliability is not practical because accurate estimations of demands and run hours are not feasible (due to the auto start and stop feature of the pump) considering the expected small contribution to the index.~~

(See also EDG failure to run definition in Section F.2.2.2. (FAQ 11-08))

Page F-55, Figure F-1

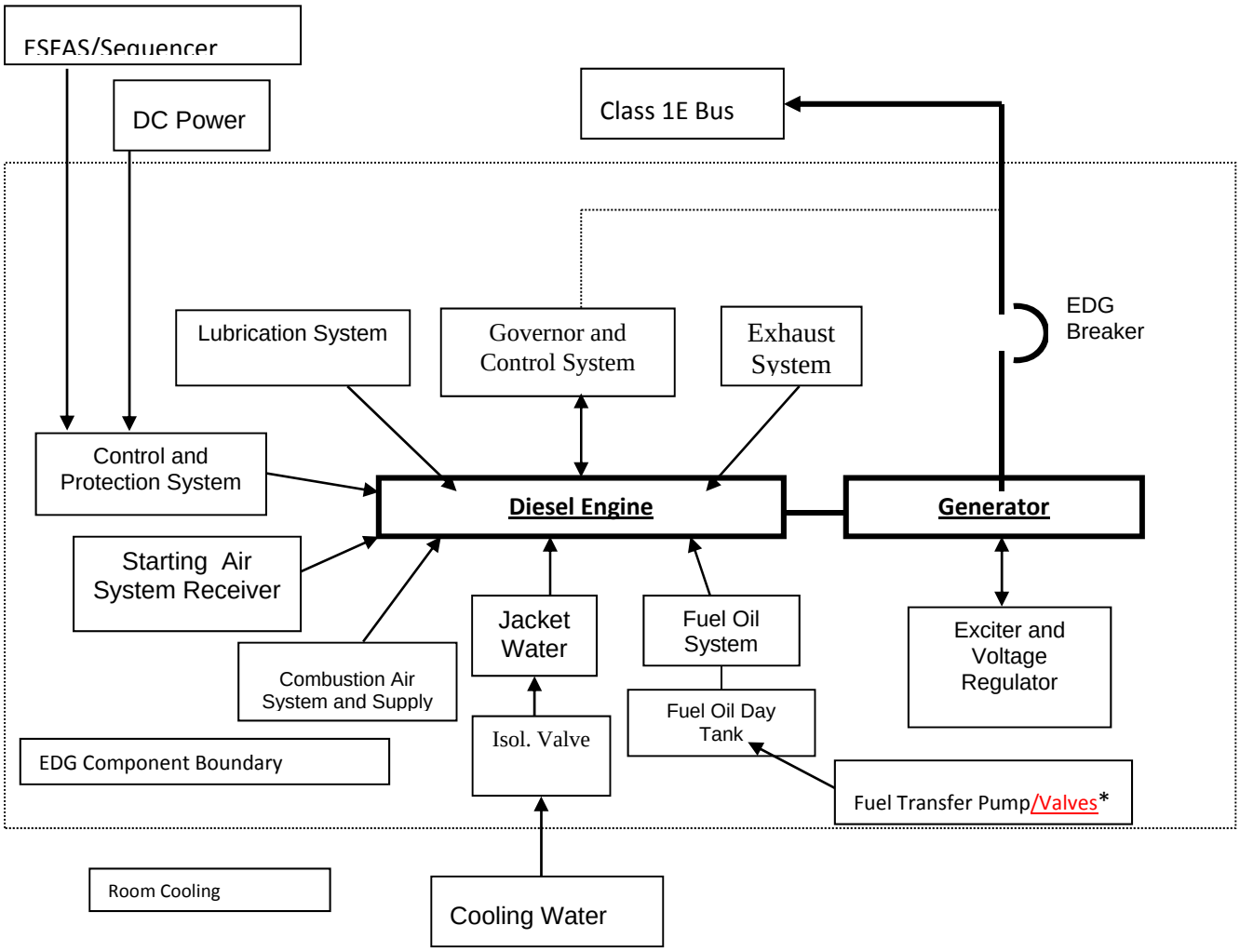

- The Fuel Transfer Pump(s)/Valve(s) ~~is~~ are included in the EDG ***Component*** ~~System~~ Boundary. See Section 5 for monitoring requirements.

NRC Response to FAQ:

NRC staff agrees with the proposed changes with an effective date of January 1, 2012, meaning that licensees will begin applying this FAQ resolution to 1Q2012 data reported to NRC in April 2012.

FAQ 11-08, EDG Failure Mode Definitions

Plant: Generic

Date of Event: NA

Submittal Date: March 30, 2011

Licensee Contact: Ken Heffner Tel/email: 919-546-5688/ken.heffner@pgnmail.com

Roy Linthicum Tel/email: 630-657-3846/roy.linthicum@exeloncorp.com

NRC Contact: Audrey Klett Tel/email: 301-415-0489

Performance Indicator: MS06

Site-Specific FAQ (Appendix D)? No

FAQ requested to become effective on 10/01/2011 and concurrent with FAQ 11-07.

Question Section

NEI 99-02 Guidance needing interpretation (include page and line citation):

The Guidance in question ~~begins on page F-25 line 21 and ends on F-26 line 9~~is on page F-26, lines 3 through 15, of NEI 99-02, Revision 6.

Event or circumstances requiring guidance interpretation:

There is no event driving this requested change to the guidance. The existing definitions for EDG Failure to Start, Load/Run, and Run are confusing and somewhat contradictory. Industry is proposing to change the guidance as described below. In addition, the failure definitions are being changed to address inclusion of the EDG Fuel Oil Transfer Pumps as being within the scope of the EDG super component boundary.

If licensee and NRC resident/region do not agree on the facts and circumstances explain

NA

Potentially relevant existing FAQ numbers

NA

Response Section

Proposed Resolution of FAQ

Make the changes to the guidance described below.
If appropriate, provide proposed rewording of guidance for inclusion in next revision.

(Existing) *EDG failure to start:* A failure to start includes those failures up to the point the EDG has achieved required speed and voltage. (Exclude post maintenance tests, unless the cause of failure was independent of the maintenance performed.)

(Proposed) *EDG failure to start:* A failure to start includes those failures up to the point when~~re~~ the EDG output breaker has received a signal to close. ~~(~~Exclude post maintenance tests, unless the cause of failure was independent of the maintenance performed.~~)~~ See the EDG failure to run definition for treatment of ~~F~~fuel ~~O~~oil ~~T~~transfer ~~P~~pump failures.[1]

Received by NEI 9/19/2011
Revised by NEI 9/20/2011

(Existing) *EDG failure to load/run:* Given that it has successfully started, a failure of the EDG output breaker to close, to successfully load sequence and to run/operate for one hour to perform its monitored functions. This failure mode is treated as a demand failure for calculation purposes. (Exclude post maintenance tests, unless the cause of failure was independent of the maintenance performed.)

(Proposed) *EDG failure to load/run*: Given that the EDG has successfully started and the output breaker has received a signal to close, a failure of the output breaker to close or a failure to run/operate for one hour after breaker closure. The EDG does not have to be fully loaded to count the failure. Failure to load/run also includes failures of the EDG output breaker to re-close following a grid disturbance if the EDG was running paralleled to the grid, provided breaker closure is required by plant design. Exclude post maintenance tests, unless the cause of failure was independent of the maintenance performed. See the EDG failure to run definition for treatment of fuel oil transfer pump failures.[1]

(Existing) *EDG failure to run:* Given that it has successfully started and loaded and run for an hour, a failure of an EDG to run/operate. (Exclude post maintenance tests, unless the cause of failure was independent of the maintenance performed.)

(Proposed) EDG failure to run: A failure after the EDG has successfully started, the output breaker has closed and the EDG has run for an hour after the breaker has closed. The EDG does not have to be fully loaded to count the failure. Exclude post maintenance tests, unless the cause of failure was independent of the maintenance performed. Failures of the EDG fuel oil transfer pump(s) are considered to be EDG failures to run if the failure of the EDG fuel oil transfer pump results in the failure of the EDG to be able to run for 24 hours (~~i.e.~~e.g., no redundant transfer pump is available[2], or the redundant pump is disabled in a manner preventing it from performing its intended function). Regardless of when the fuel oil transfer pump(s) fails, this counts as a run failure. In the case where a fuel oil transfer pump(s) failure results in ~~a loss of capability of~~ more than 1 EDG to not be able to run for 24 hours, a failure is counted for each affected EDG.[1]

Footnotes to be included in NEI 99-02:

[1]Information Systems Laboratories, Inc. performed a review for the NRC of EDG and FOTP failures to support the changes made to EDG failure definitions in 2011. This report can be found in the NRC's Agencywide Documents Access and Management System (ADAMS) at Accession No. ML11259A101.

[2] In order for a redundant fuel oil transfer pump to be credited in a failure determination, it must either automatically start or be able to be manually started in the time needed to satisfy the PRA success criteria. If the pump requires a manual start, control room indication must be available to alert the control room staff of the need to start the pump in in the time required.~~In order for the redundant FOTP to be considered available, the redundant FOTP must automatically function or promptly started by a designated operator stationed locally at the FOTP solely for this purpose. Restoration actions must be contained in a written procedure, must be uncomplicated (a single action or a few simple actions), must be capable of being restored in time to satisfy PRA success criteria, and must not require diagnosis or repair~~.

Received by NEI 9/19/2011
Revised by NEI 9/20/2011

FAQ 11-09 (Proposed)
Crystal River-3 Extended Shutdown

Plant:	Crystal River Unit 3 (CR-3)
Date of Event:	N/A
Submittal Date:	June 30, 2011
Licensee Contact:	Dennis W. Herrin
	Tel/email: 352.563.4633/Dennis.Herrin@pgnmail.com
NRC Contact:	Tom Morrissey (CR-3 SRI)
	Tel/email: 352.795.6486 (x3265)/Thomas.Morrissey@pgnmail.com

Performance Indicators:

Unplanned Scrams with Complications (IE04)
Mitigating System Performance Index (MS06-MS10)

Site-Specific FAQ (Appendix D)? ■ Yes □ No

In September 2009, CR-3 was taken off line for a refueling outage and for steam generator replacement. During creation of a construction opening in the Containment Building for steam generator replacement, a delamination was created in Bay 3-4 during tendon de-tensioning activities. In mid-March 2011, final re-tensioning of tendons after concrete repair in Bay 3-4 was suspended while engineers investigated evidence of delamination in Bay 5-6 resulting from the tendon re-tensioning work. CR-3 has been shut down since September 2009 and will continue to be shut down into 2013 and perhaps beyond, depending on the repair methodology to be selected. NEI 99-02 does not contain guidance on how to treat certain performance indicators during periods of extended shutdown, or how to recover after returning the unit to service after an extended shutdown.

Because of the unique conditions of this extended shutdown, CR-3 is requesting approval of this FAQ in accordance with NEI 99-02, Revision 6, page E-1, Lines 18-19:

> "3. To request an exemption from the guidance for plant-specific circumstances, such as design features, procedures, or unique conditions."

FAQ requested to become effective when approved.

Request that this FAQ be reviewed on an expedited basis since the CR-3 Service Water System (RW/SW/DC) MSPI performance indicator is currently 62% in the Green Band and declining due to the reduction in critical hours and will cross the green-to-white threshold before reaching an extended shutdown period of three years, without an additional MSPI functional failure.

Question Section

NEI 99-02 Guidance needing interpretation (include page number and line citation):

Unplanned Scrams with Complications – Clarifying Notes - Page 19
Mitigating System Performance Index – Clarifying Notes – Pages 33 - 35

Event or circumstances requiring guidance interpretation:

Unplanned Scrams with Complications (USwC) is defined as the number of unplanned scrams, while the reactor is critical, both manual and automatic, during the previous 4 quarters that require additional operator actions. After being in a condition where a reactor has not been critical for the previous 4 quarters, no opportunities exist for a USwC and further performance indicator reporting has no meaning. Once a unit exits an extended shutdown and the reactor becomes critical, this performance indicator will immediately have meaning.

Mitigating System Performance Index (MSPI) is defined as the sum of changes in a simplified core damage frequency evaluation resulting from differences in unplanned unavailability and unreliability relative to industry standard baseline values. In order to initially implement these new performance indicators, three years of past operational data had to be base loaded into the INPO Consolidated Data Entry System in order to arrive at the first meaningful calculated value. It can be assumed that an extended shutdown lasting greater than three years renders these performance indicators meaningless. An additional concern is that these performance indicators are sensitive to the reduction in critical hours and may actually become meaningless sooner that an extended shutdown period of three years. A final consideration is that although many of the MSPI monitored components are not required to be operable in NO MODE operation and MSPI functional failure opportunities are minimized, any such failure would be unrealistically weighted and could result in crossing the green-to-white performance indicator threshold.

If licensee and NRC resident/region do not agree on the facts and circumstances, explain:

The NRC Senior Resident Inspector agrees with the characterizations above.

Potentially relevant existing FAQ numbers:

No potentially relevant existing FAQs have been located. A review was performed of NRC-approved FAQs and the current listing of Draft FAQs.

Response Section:

Proposed Resolution of FAQ:

Incorporate guidance for periods of extended shutdown and its impact on the following performance indicators: Unplanned Scrams with Complications and Mitigating System Performance Index.

If appropriate, provide proposed rewording of guidance for inclusion in next revision.

No revised rewording is being proposed. Specific wording deferred to the NEI Task Force. Consider the “Event or circumstances requiring guidance interpretation” described above for inclusion in the next revision.

FAQ 11-10 (Proposed)
Counting of Compensatory Hours for Perimeter Intrusion Detection System Upgrade

Plant: Exelon
Date of Event: January 2011
Submittal Date: July 13, 2011
Licensee Contact: Ron Gaston, (630) 657-3359, ronald.gaston@exeloncorp.com
NRC Contact: TBD

Performance Indicator: Protected Area Security Equipment Performance Index

Site-Specific FAQ (App. D)?: No

FAQ requested to become effective: Upon Approval

Question Section

NEI 99-02 Guidance Needing Interpretation:

The purpose and scope of the Physical Protection Cornerstone, as well as the associated Protected Area Security Equipment Performance Index Performance Indicator (PI), discussed in Section 2.7 of NEI 99-02, Revision 6.

Question to be Addressed:
Is the intent and scope of the Physical Protection Cornerstone Performance Indicator to monitor licensees' failure to comply with the March 31, 2010 revision to 10 CFR Part 73? *Specifically, do compensatory hours resulting from a station's failure to upgrade their Perimeter Intrusion Detection System (PIDS) following the effective date of the 2010 10 CFR Part 73 rulemaking count against the Protected Area Security Equipment Performance Index PI?*

Event or circumstances requiring guidance interpretation:

Background
Effective March 31, 2010, a change to 10 CFR Part 73 required that intrusion detection equipment be capable of detecting both attempted and actual penetration of the protected area (PA) perimeter barrier before completed penetration of the PA perimeter barrier. The requirement for detection prior to penetration was a new requirement under the new security regulation that impacted sites that have their perimeter intrusion detection system (PIDS) installed inside the PA barrier.

Following the revision to 10 CFR Part 73, the NRC identified a violation regarding the compliance with the regulation 73.55 (e)(7) during a June 2010 inspection at a Region 1 station where this condition was not identified by site security. The NRC determined that the Early Warning System (EWS) used to satisfy PIDS under revised section 73.55 did not meet criteria outlined in the regulation. Accordingly, the station received a Green Finding and non-cited violation for this issue due to the PA PIDS failure to meet requirements for detection prior to

penetration into the PA. Compensatory measures were immediately implemented to comply with the revised section 73.55 requirements until modifications to the system could be implemented.

During a January 2011 inspection at another station which had this same EWS issue, the NRC questioned whether the hours currently being compensated to address the non-compliance should be counted against the Protected Area Security Equipment Performance Index (PI). The issue was exited as an Unresolved Issue (URI).

Position

It is Exelon's position that the intent and scope of the Physical Protection Cornerstone, as well as the associated Protected Area Security Equipment Performance Index PI, is to monitor the maintenance effectiveness of the installed PA intrusion detection systems and alarm assessment systems to perform their intended function. It is not the intent of the PI to monitor compliance with regulations. The Reactor Oversight Process (ROP) utilizes other vehicles to address the issue of failure to comply with a regulation.

Therefore, since failure to properly design and install the EWS equipment to comply with the 2010, 10 CFR Part 73 rule change is not part of the monitoring intent of the PI, the associated compensatory actions do not result from a situation consistent with the stated intent of the PI. That is, the compensatory hours are not the result of an installed security equipment degradation, defect, or poor maintenance practices.

Justification

The above position is, in part, based on the discussion on Page 71 of NEI 99-02, Revision 6. This section states that PI serves as a measure of the plant's ability to maintain security equipment capable and available to perform its intended function. Specifically, the PI monitors the plant's maintenance practices to effectively maintain installed equipment in a working order and measures installed equipment's condition resulting from aging or wear. NEI 99-02 states:

> *This indicator serves as a measure of a plant's ability to maintain equipment–to be available to perform its intended function. When compensatory measures are employed because a segment of equipment is unavailable—not adequately performing its intended function, there is no security vulnerability but there is an indication that something needs to be fixed. The PI provides trend indications for evaluation of the effectiveness of the maintenance process, and also provides a method of monitoring equipment degradation as a result of aging that might adversely impact reliability. (pg 71, line 21)*

The "Definition of Terms" and the "Clarifying Notes" sections of the PA Security Equipment Performance Index discussion in NEI 99-02 provide further indications that the intent of the PI is to monitor the performance and function of installed security equipment.

- The definition of compensatory measures is "Measures used to meet physical security requirements pending the return of equipment to service." (Page 73, Lines 18, 19)

- The definition of equipment unavailability states that compensatory hours "stop being counted when the equipment deficiency has been corrected, equipment tested and declared back in service." (Page 73, Lines 39 – 41).

- The clarifying notes on compensatory posting state that an exception to postings for non-equipment failures is when equipment is purposely "taken out-of-service" for testing or maintenance purposes. (Page 74, Lines 9, 10)

When discussing equipment performance, these sections use the words "return of equipment," "back in service," and "taken out-of-service". These sections further support the conclusion that the Protected Area Security Equipment Performance Index is intended to monitor the performance of installed security equipment, and the compensatory measures associated with installed equipment defects or deficiencies.

Additional Insights

- The application of compensatory measures for an IDS or CCTV degradation or defect does not count against the PI in all instances. NEI 99-02, Revision 6 provided discussion on other situations where compensatory measures are applied and the resulting hours are not counted. These include compensatory hours due to environmentally related failures of installed equipment, preventive maintenance, scheduled system upgrades, and surveillance or testing activities.

- In the situation described in the Background section above, all installed security equipment was able to perform its intended function and there was no degradation from the original design.

- NEI 99-02 Rev 6 defines degradation as when "Required system/equipment/component is no longer available/capable of performing its intended safeguards function—manufacturer's equipment design capability and/or as covered in the PSP" [NEI 99-02, page 75, lines 16-18]. In the context of this 2010 Rule change, the installed intrusion detection equipment continued to perform its intended safeguards function according to the manufacturers design capability. The non-compliance with the revised 10 CFR Part 73 regulations (discussed in the Background section above), has been adjudicated through the NRC inspection program and dispositioned with a Finding and Non-cited violation.

<u>If licensee and NRC resident/region do not agree on the facts and circumstances, explain:</u>

The question posed in this FAQ was raised by the NRC as an URI in a Security related Inspection Report for an Exelon site. The NRC Inspection Report stated that more information is required

to determine if a performance deficiency exists related to the licensee's determination that a number of compensatory hours were not reportable under the PI.

The URI further states that IMC 0608, "Performance Indicator Program," describes the process that will be followed to resolve the differences in interpretation of performance indicator guidance. IMC 0608 discusses the FAQ process as the process to be used to resolve licensee / inspector differences.

Potentially relevant existing FAQ numbers: None

Response Section

Proposed Resolution of FAQ: The intent of the PA Security Equipment Performance Index PI is to monitor the maintenance effectiveness of installed security equipment. The non-compliance associated with the 2010 10 CFR Part 73 rule change was due to failure to install necessary equipment and is not associated with maintenance or aging of an installed system. Therefore, the compensating hours incurred due to the non-compliance, do not count against the PI.

If appropriate, provide proposed rewording of guidance for inclusion in next revision:

Modify the Purpose section on NEI 99-02, Revision 6, page 72, lines 7-9, to insert the underlined text so the sentence reads as follows: "The PI is used to monitor the unavailability of installed PA intrusion detection systems and alarm assessment systems to perform their intended function due to maintenance effectiveness or aging."

Final NRC Response
September 21, 2011 ROP Working Group Meeting
FAQ 11-11 Alert and Notification System

Plant: Fort Calhoun Station
Date of Event: June 6, 2011
Submittal Date: 7/12/2011
Licensee Contact: Erick Matzke Tel/email: _402-533-6855 / ematzke@oppd.com
NRC Contact: Eric Schrader_____ Tel/email: _301-415-5627/eric.schrader@nrc.gov_____

Performance Indicator:

Alert and Notification System Reliability (ANS) EP03

Site-Specific FAQ (Appendix D)? Yes

Yes, this would be a Site Specific FAQ (Appendix D)

FAQ requested to become effective when approved or _____

FAQ requested to become effective for the second quarter 2011 and forward.

Question Section

NEI 99-02 Guidance needing interpretation (include page and line citation):

ANS page 57 lines 6 through 10

6 If a siren is out of service for maintenance or is inoperable at the time a regularly scheduled test
7 is conducted, then it counts as both a siren test and a siren failure. Regularly scheduled tests
8 missed for reasons other than siren unavailability (e.g., out of service for planned maintenance or
9 repair) should be considered non opportunities. The failure to perform a regularly scheduled test
10 should be noted in the comment field.

Event or circumstances requiring guidance interpretation:

This document details the decision process for reporting Alert Notification System siren status on NRC Performance indicators during the Flooding event of the spring and summer of 2011.

Under normal circumstances and in accordance with the Fort Calhoun Radiological Emergency Response Plan, section E, sirens are tested bi-weekly for functionality via Emergency Planning Test (EPT) EPT-1 (Alert Notification System Silent Test), quarterly via EPT-2 (Alert Notification System Growl Test), and annually via EPT-3 (Alert Notification System Complete Cycle Test).

Current flooding along the Missouri River and within the 10-mile EPZ has resulted in several sirens being [deliberately] disabled by disconnecting AC power due to rising river levels. These flooding conditions do not only affect the operability/functionality of the sirens, but have also resulted in power disconnections for and evacuation of residents in the areas for which these sirens provide coverage.

Additionally, backup route-alerting is still available for any remaining affected residents as verified through local and state governments.

In accordance with NEI 99-02, Revision 6 (Regulatory Assessment Performance Indicator Guideline), page 57 concerning siren testing states "Regularly scheduled tests missed for reasons other than siren unavailability (e.g., out of service for planned maintenance or repair) should be considered non opportunities." This evaluation and exemption was applied to the sirens that have been removed from service due to flooding.

These sirens were removed from service intentionally, and will remain out of service for an extended period of time; therefore will not be counted in the performance indicator for Alert and Notification System Reliability. For all EPTs conducted on sirens during the time period when power has been removed from the siren due to flooding, the number of sirens tested will only be those that have normal power available.

If licensee and NRC resident/region do not agree on the facts and circumstances explain

The NRC concurs with what is in the FAQ. The NRC indicated that they agreed with our conclusion. (Initial)

Potentially relevant existing FAQ numbers

Grand Gulf Plant Specific FAQ in NEI 99-02 rev 6, appendix D, page D2.

Response Section
Proposed Resolution of FAQ

~~"Resolution:~~ Appendix D of NEI 99-02 will be updated to include the following resolution of this issue for Fort Calhoun:

If sirens are not available for operation due to high flood water conditions, and the area is deemed inaccessible and uninhabitable by State and/or Local agencies, the siren(s) in question will not be counted in the numerator or denominator of the Performance Indicator for that testing period.~~"~~

NRC Response:

NRC staff agrees with the proposed resolution and the effective date of 2Q2011 and forward. A generic FAQ should be submitted.