# *Testing and Analysis to Reduce Debris Generation Zones of Influence for GSI-191*

Presented by
Tim Andreychek
Westinghouse Electric Co LLC

NRC Public Meeting, September 21, 2011

# Outline

- Background
  - Benefits
  - Program Deliverables
- Program Approach
- Materials being Tested
- Examples of Jet Impingement Targets
- Status
- Summary

# Background

- Previous jet impingement testing for individual licensees
  - Reports shared by several licensees
  - NRC identified questions (RAIs) about jet impingement test data
  - RAIs determined to be generically applicable to all licensees using jet impingement data
- PWROG developed generic responses to NRC Requests for Additional Information (RAIs)
- Two issues not closed were:
  - Consequences of a choke point in the test loop upstream of the exhaust nozzle on the characteristics and behavior of the jet, and,
  - Approach taken to apply test data in the evaluation of a ZOI for tested materials (scaling of test data to plant)
- New program defined to address these two issues

# Background

The integral steps to addressing GSI-191:

Reducing debris generation is a benefit to all subsequent steps to GSI-191 resolution.

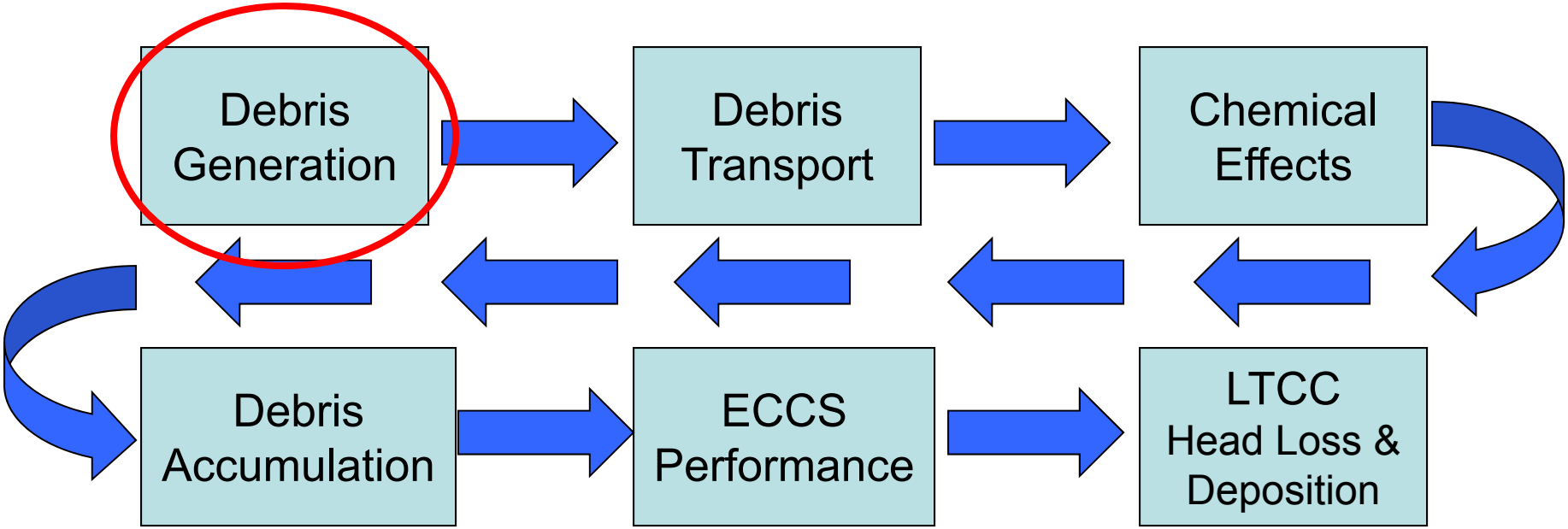

# Background

## Benefits of Reducing Debris Generation

- Multiple General Benefits
  - Reduces “feed stock” for chemical effects
  - Adds margin to wear, abrasion and erosion on Emergency Core Cooling System (ECCS) components
  - Reduces debris for long-term core cooling (LTCC) head loss concerns
- Other Plant-Specific Benefits of Smaller Zones of Influence (ZOIs)
  - Added margin available for existing sump screens
  - Reduce/eliminate insulation replacement
    - Cost savings
    - Dose reduction

# Background

- Program deliverables
  - Data-based model to realistically predict pressure field of an expanding subcooled jet
  - Jet impingement data for tested target materials
    - NUKON™ pillows
    - Jacketed and banded calcium-silicate insulation
    - Others as discussed later
  - Revised (reduced) Zones of Influence (ZOIs) for tested materials
- Access to program deliverables (data)
  - Limited to participating licensees

# Program Approach

- Method of Reducing Debris Generation
  - Jet impingement testing to demonstrate performance
  - “Targets” are problematic materials
- Perform instrumented tests
  - Measure temperatures, static and dynamic pressures in expanding jet
  - Use data to develop a new jet expansion model
    - Accurately represent axial <u>and</u> radial expansion of a subcooled jet
- Perform target tests
  - Note when “damage” occurs
  - Couple distance from jet nozzle with new jet expansion model to define new ZOI

# Program Approach

Test Strategy

- Use PWR cold leg conditions
  - Results in maximum thrust loads
  - Damage to “targets” related to thrust
- Maintain choked flow for >10 seconds
  - Conservatively large force applied over time to “target” compared to plants
  - Provides “reasonable assurance” of target integrity under jet loads
- Acceptance Criteria; successful tests are
  - Up to incipient damage for NUKON™ pillow
  - Up to incipient damage for jacketed and banded calcium-silicate

# Program Approach

## Facility Functional Requirements

- Facility capabilities
  - Can achieve PWR cold-leg flow conditions
    - Pressures = 2200 psia
    - Temperatures = 530°F (276.7°C)
  - Large fluid inventory
    - Maintain jet flow for several seconds
  - Simulate instantaneous jet flow
  - Allow for full expansion of jet
  - Data collection
    - Ability to monitor and store output from 50-plus sensors
    - Minimum data sampling frequency of 100 samples/second

# Program Approach

## Facility Piping Layout

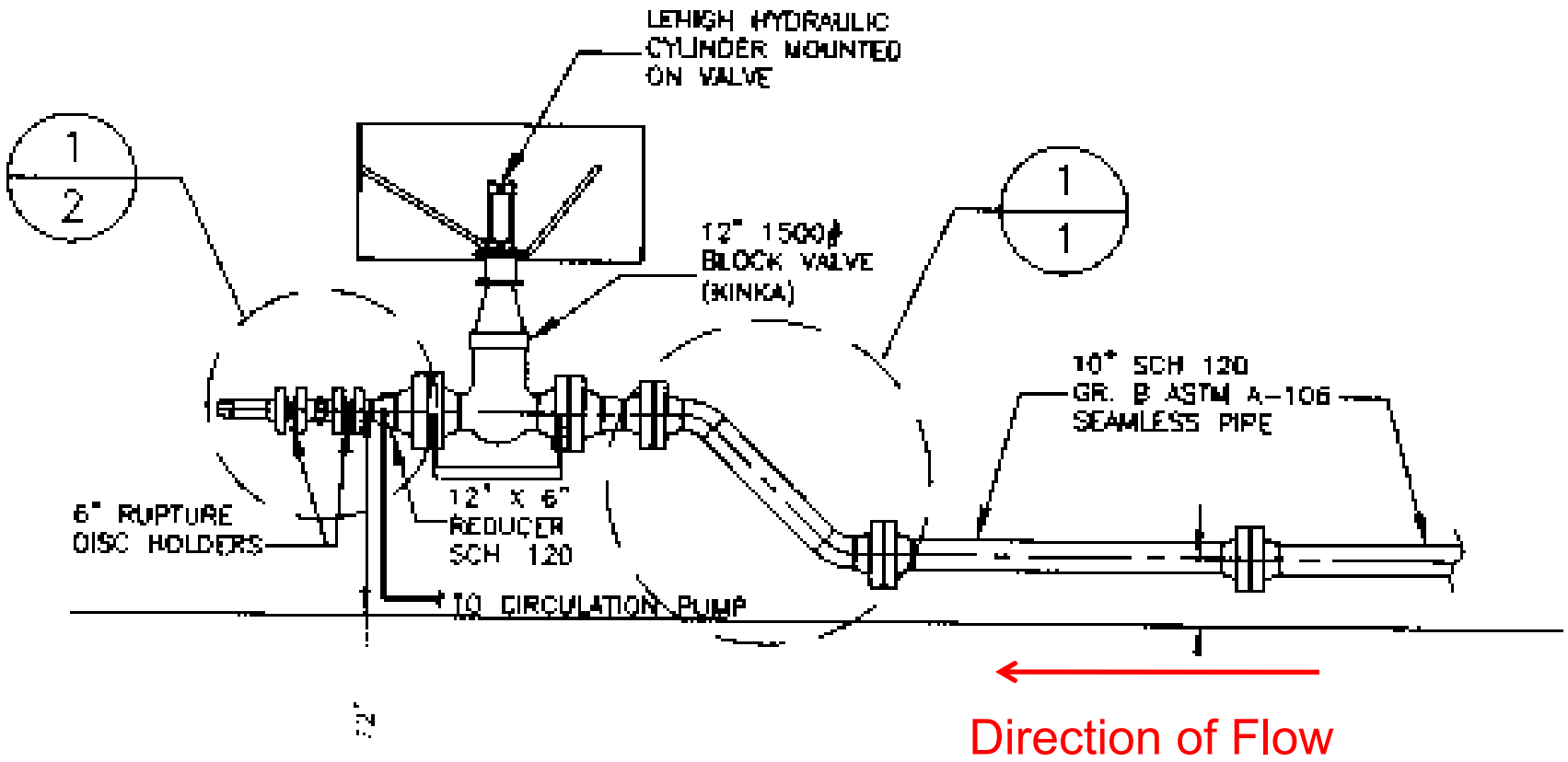

# Program Approach

## Instrumented Nozzle Design

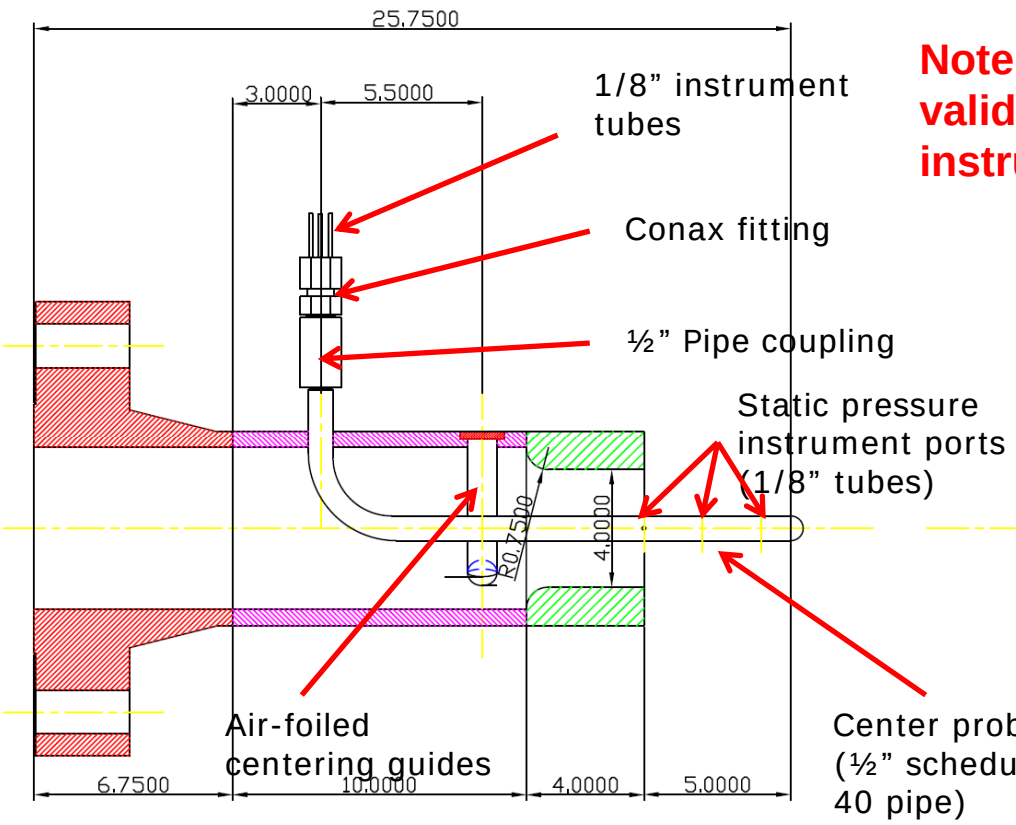


**Note: Instrumented nozzle used to validate test rig and jet, but not for instrumented and target tests.**

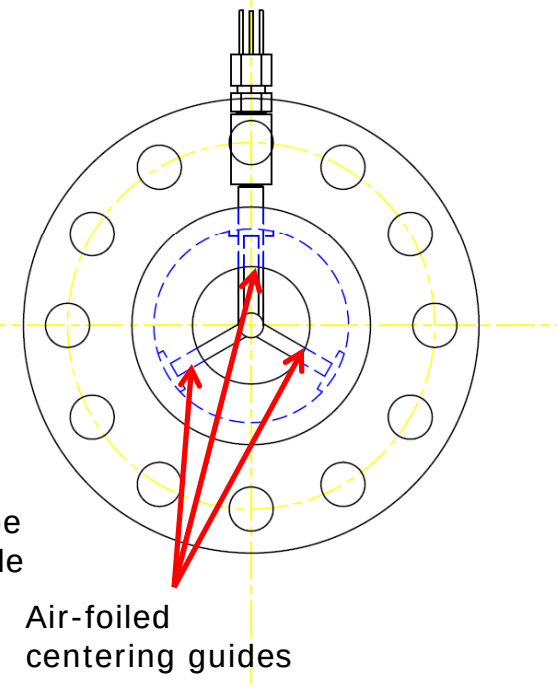

# Program Approach

## As-Constructed Nozzle Installation

# Program Approach

Instrument Tree for Free Jet Expansion – Far Field

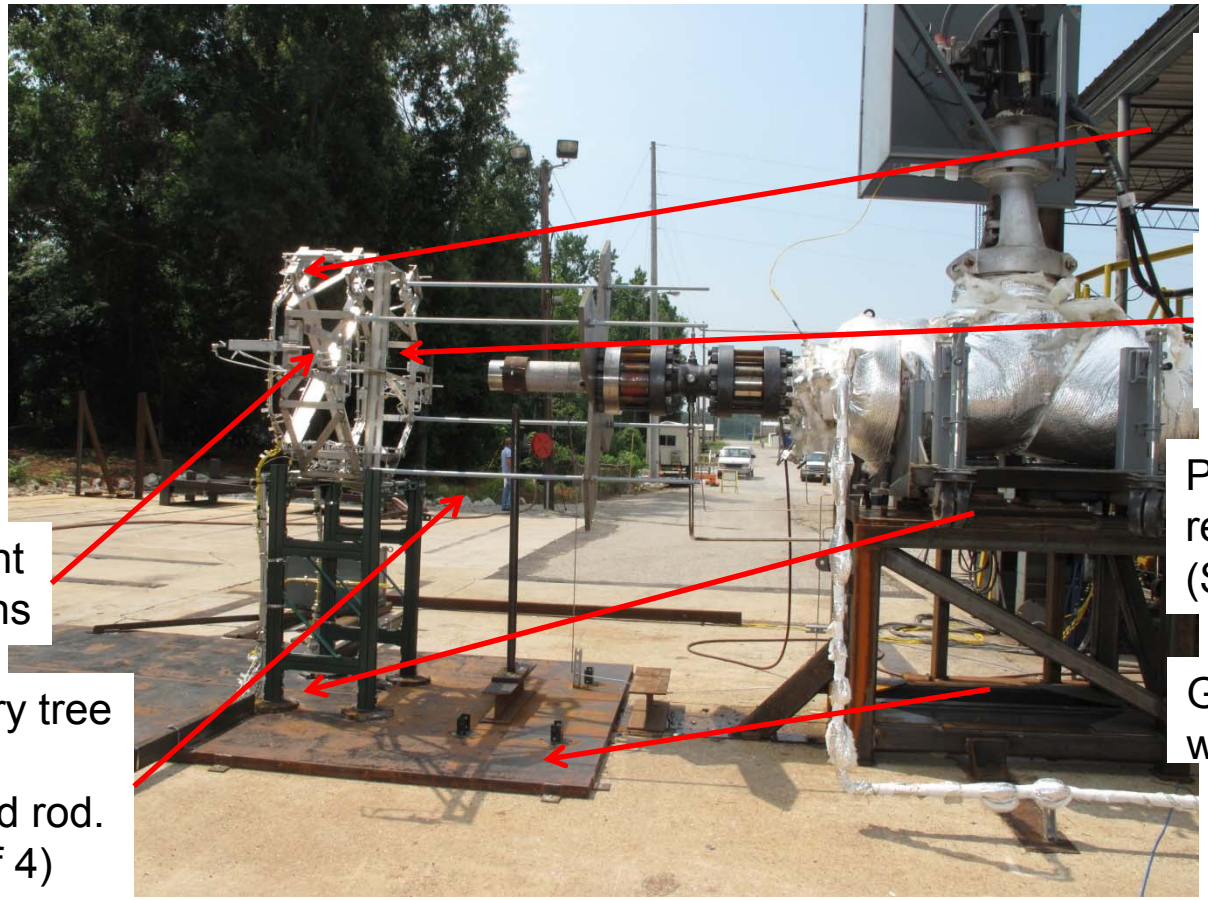

# Program Approach

Instrument Tree for Free Jet Expansion – Near Field

Instrument Extensions (pressure measurements)

Secondary tree restraint (Threaded rod. Typical of 4)

Primary tree restraint (Slide plate)

Ground weld plate

# Video of Instrumented Test

- Play Video #1

# Observations from Instrumented Tests

- Loop performance:
  - Pressures at nozzle are conservatively large
    - Nozzle pressures larger than W COBRA/TRAC plant calculations
    - Therefore test mass flux and forces are conservatively large
  - The jet conditions are repeatable
    - Pressures in nozzle are repeatable from test to test
- Conclusion:
  - Test conditions are both conservative and repeatable

**Nozzle Pressure Comparison; Instrumented Tests to W COBRA/TRAC Predictions**

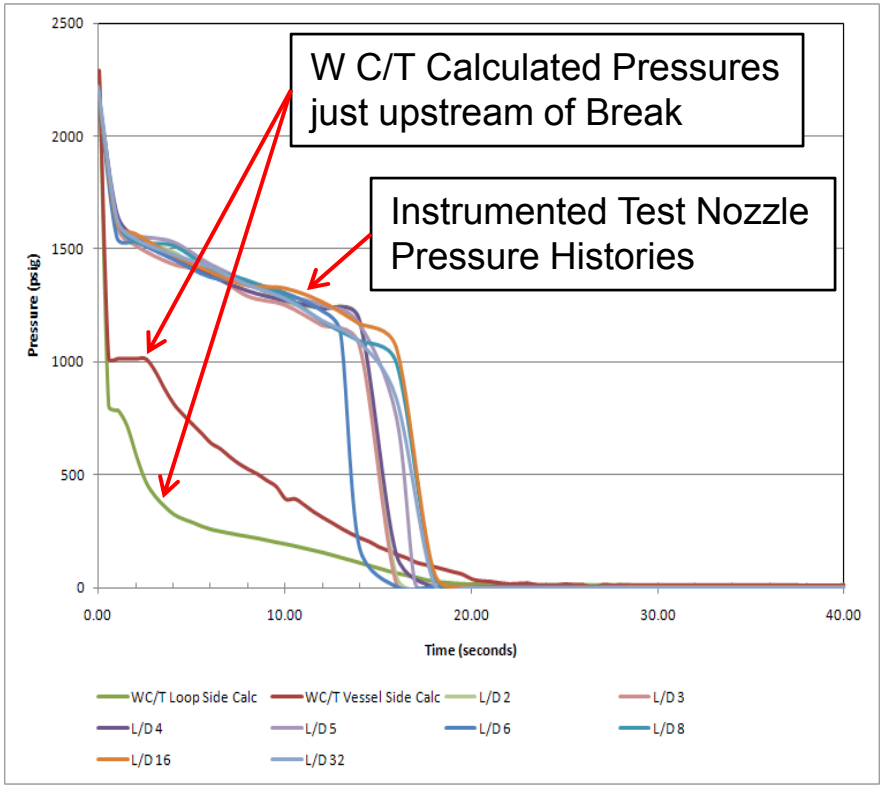

# Observations from Instrumented Tests

- Initial Review of Instrumented Test Data
  - Data demonstrates jet is well formed
    - No known issues associated with suitability of jet
  - Near the jet nozzle
    - Peak pressure is not on the jet centerline
      - Similar behavior observed in other high-velocity jets
      - Affects shape of ZOI
    - Impact on target testing
      - Accounted for in location of targets in jet field at affected L/D range
- NRC Site Visit during Instrumented Testing
  - No issues identified as a result of the visit
  - Complimentary on approach and level of detail

# Program Approach

## Instrumented Tests Performed to Collect Data to Support Jet Expansion Model Development

| Instrumented Test # | Distance from nozzle exit to leading instrument array (inches) | Distance from nozzle exit to trailing instrument array (inches) |
|---|---|---|
| 1 | 8.0" (L/D = 2.0) | N/A |
| 2 | 12.0" (L/D = 3.0) | N/A |
| 3 | 16.0" (L/D = 4.0) | 28.0" (L/D = 7.0) |
| 4 | 20.0" (L/D = 5.0) | 32.0" (L/D = 8.0) |
| 5 | 24.0" (L/D = 6.0) | 36.0" (L/D = 9.0) |
| 6 | 32.0" (L/D = 8.0) | 44.0" (L/D = 11.0) |
| 7 | 64.0" (L/D = 16.0) | 76.0" (L/D = 19) |
| 8 | 128.0" (L/D = 32.0) | 140.0" (L/D = 35.0) |

# Nukon™ on a Hemispherical Head

- Hemispherical head represents
  - Bottom of steam generator
  - Pump
- Typically installed with no jacketing
- Location in front of Jet Nozzle
  - Offset to account for off-center peak pressure
- Results
  - Outer blanket cover completely removed
  - All fiberglass insulation removed
  - Back blanket cover remained in place
- See video next
- See pre- and post-test photos on slide after video

# Nukon™ on a Hemispherical Head

- Play Video #2

# Nukon™ on a Hemispherical Head

**Pre-test Photo**

**Post-test Photo**

# Nukon™ on a Pipe

- 2-inch Diameter Pipe
  - Smallest diameter pipe for Sure-Hold bands
- Sure-Hold Bands
  - Installed on 6-inch centers
  - Jacket latches left unlatched
- Location in front of Jet Nozzle
  - Set to improve on NEI 04-07 SE ZOI
- Results
  - Some separation of jacket at overlap
  - No damage to underlying Nukon™ pillow
- See post-test photos on next slide

# Nukon™ on a Small Pipe

Front view, exposed Nukon™ jacket

Front view, exposed Nukon™ jacket

# Calcium-Silicate Target

- Target Description
  - 2⅜ inch diameter pipe
  - 2 inches of calcium silicate
  - Aluminum jacketing with stainless steel bands at 6 inch centers
- Location in front of Jet Nozzle
  - Located to address plant concerns
- Results
  - Jacketing torn on right-hand side of target
  - Some calcium silicate removed from back of target
  - Target being dried and weighed to determine per cent insulation lost
  - See photographs on next slide

# Calcium-Silicate Target

**Pre-Test Photo**

**Post-Test Photo**

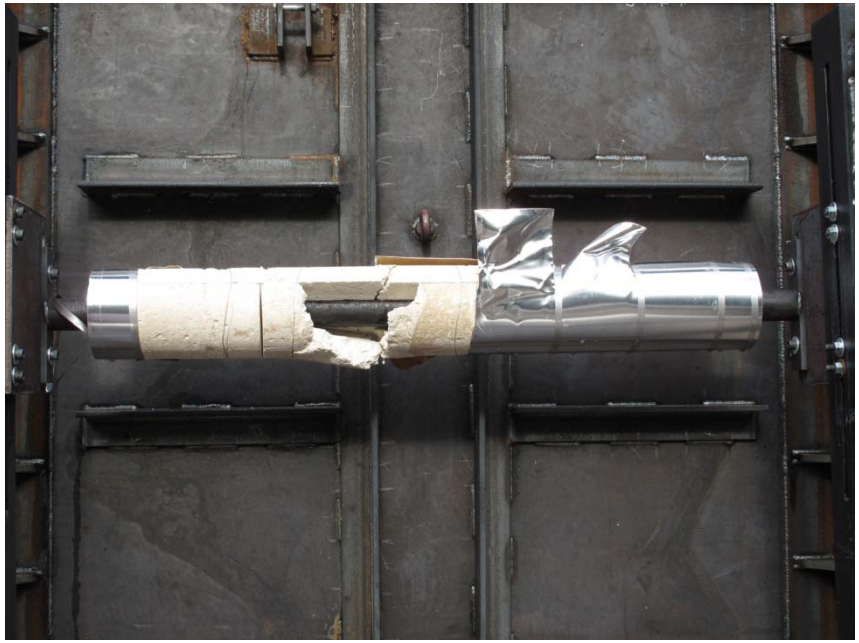

# Calcium-Silicate Target

- Target Description
  - 12 inch diameter pipe
  - 2 inches of calcium silicate
  - Stainless Steel jacketing with stainless steel bands at 3 inch centers
- Location in front of the Jet Nozzle
  - Located to address plant concerns
- Results
  - Target removed from test stand; possible damage due to ejection
  - Jacketing torn/removed on right-hand side of target
  - Some calcium silicate removed where jacketing damaged (limited damage observed)
  - See photographs on next slide
- Test not valid for scaling
- Test valid for demonstration of limited cal-sil damage

# Calcium-Silicate Target

**Post-Test Photo #1**

Test Stand

Test Article

Test article was ejected ~ 40 yds

**Post-Test Photo #2**

Removed cal-sil insulation

# Calcium-Silicate Target

- Target Description
  - 12 inch diameter pipe
  - 2 inches of calcium silicate
  - Double Jacket (aluminum inner, stainless steel outer), stainless steel bands at 6 inch centers
- Location in front of the Jet Nozzle
  - Located to address plant concerns
- Results
  - Portion of outer jacket torn and removed
  - Inner jacket intact; no exposed cal-sil
  - See photographs on next slide
- Successful test; double jacketing demonstrated a success path

# Calcium-Silicate Target

After-test Photo; Front of 12”
Double-Jacketed Cal-Sil Test

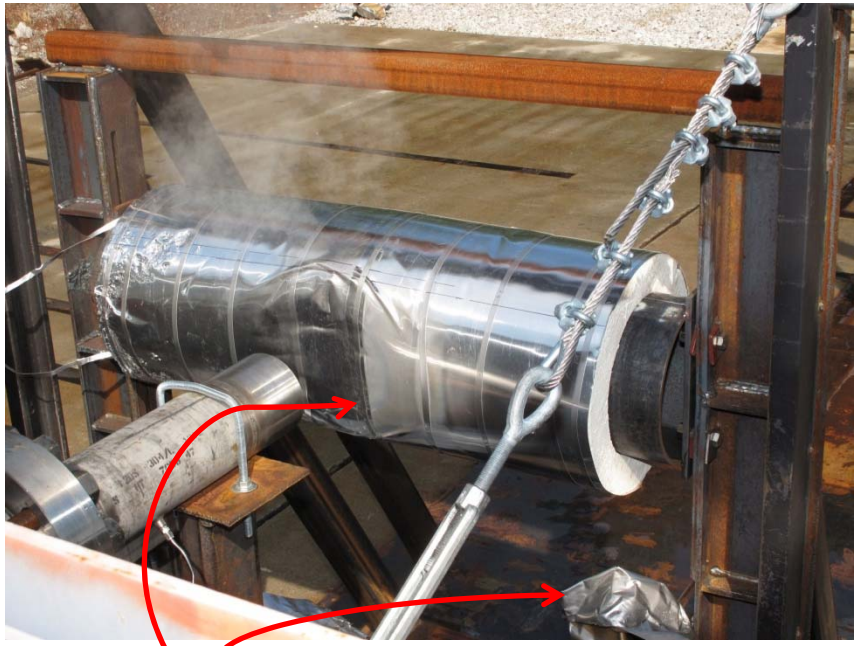

Torn outer jacket

After-test Photo; Back of 12”
Double-Jacketed Cal-Sil Test

~¼ inch movement
of outer jacket

# Temp-Mat Target

- Target Description
  - Stainless steel “pan” with lid containing Temp-Mat
  - Lid held in place with hog-rings
- Location in front of the Jet Nozzle
  - Located to address plant concerns
- Results
  - Pan remained intact
  - No release of Temp-Mat
  - See photographs on next slide
- Successful test

# Temp-Mat Target

Pre-test configuration

Post-test configuration

# Cable Tray Target

- Target Description
  - Standard electrical cable tray
  - Cover applied to protect electrical insulation from jets
- Location in front of the Jet Nozzle
  - Located to address plant concerns
- Results
  - Collapsed metal cover with some accompanying bending of cover
  - No loss of cable insulation under the cover
  - See photographs on next slide
- Test successful

# Cable Tray Target

## Post-Test Photo

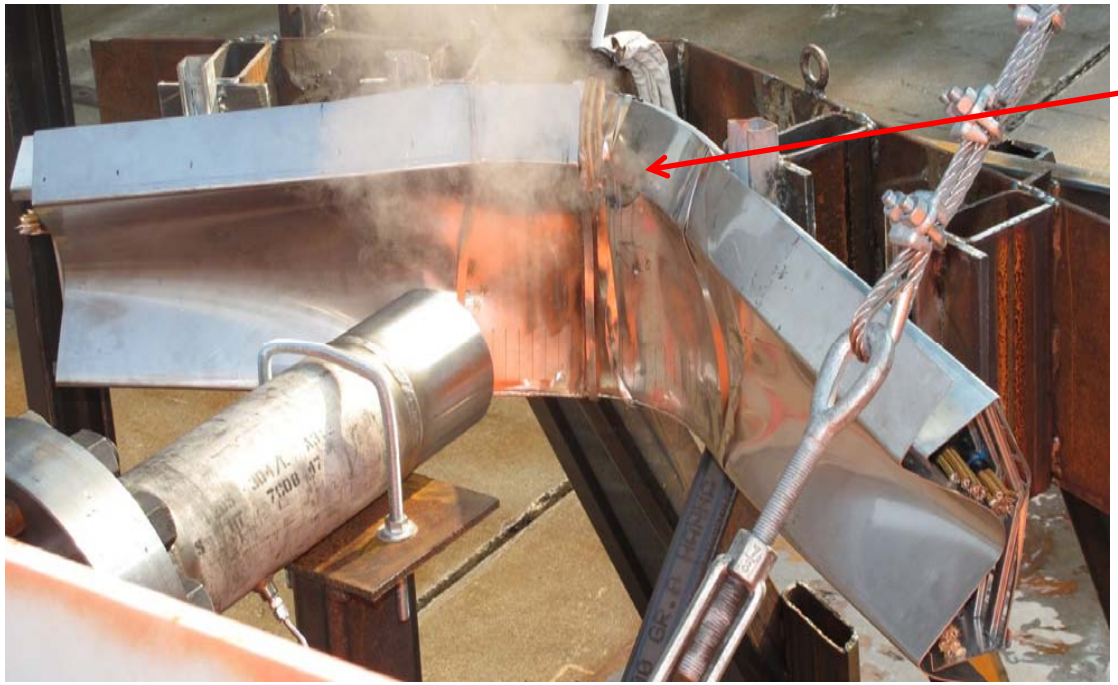

Cable Tray Cover
Partially Collapsed

# Path Forward

- Double-jacketing Cal-Sil
  - Results are favorable
- Cable Trays reinforced
  - Design for plant application being tested
- Nukon™ pipe tested
  - Jacketing with latches left open, and
  - Sure-Hold Bands at 6-inch centers
  - Results are favorable for small-diameter pipe

# Status

- Jet Expansion Model
  - Constituent equations of new jet model defined
  - Good agreement with jet centerline pressures from Marviken test data
  - Data from instrumented tests being used to validate radial expansion of jet
- Test Program
  - Instrumented testing completed
  - Target testing being performed
  - Evaluating alternative target configurations
- Program to be completed by end of 2011

# Summary

- Reduction of ZOI for problematic materials considered essential for GSI-191 closure
- Jet Impingement testing needed to support ZOI reduction
  - Instrumented tests for new jet expansion model completed
    - Data being evaluated to support new jet expansion model
    - NRC site visit netted no immediate “issues”
  - Target tests currently being performed
- Pursuing options and alternatives to achieve desired reduction in ZOI values mandated in NRC SE on NEI 04-07
- Program on schedule for completion by end of 2011

# Are there questions?