Chapter 17

- **External Dose Evaluation and Reconstruction**

DOSE RECONSTRUCTION

Objectives

- Develop skills to perform a simple dose reconstruction and estimate the dose received
- Summarize the procedures used to assess, reconstruct and assign external doses received by individuals and calculate the external dose when provided appropriate source, distance or comparable dose data

Some International Dose Reconstruction Scenarios

^{137}Cs Contamination In Brazil (9/87)

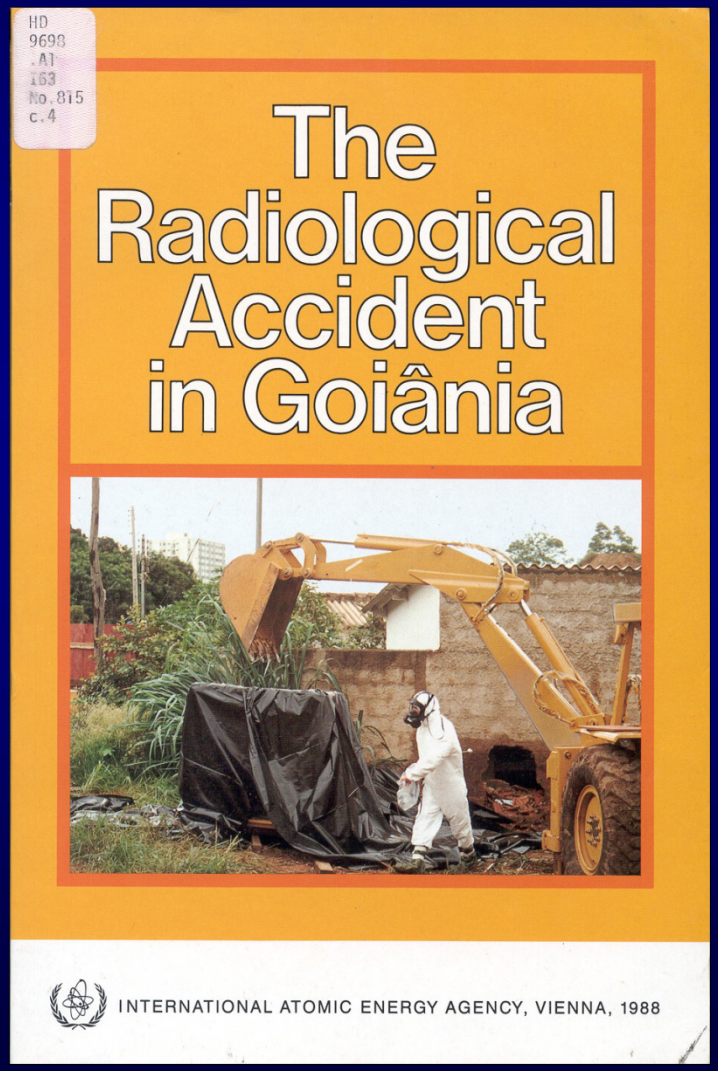

Some International Dose Reconstruction Scenarios

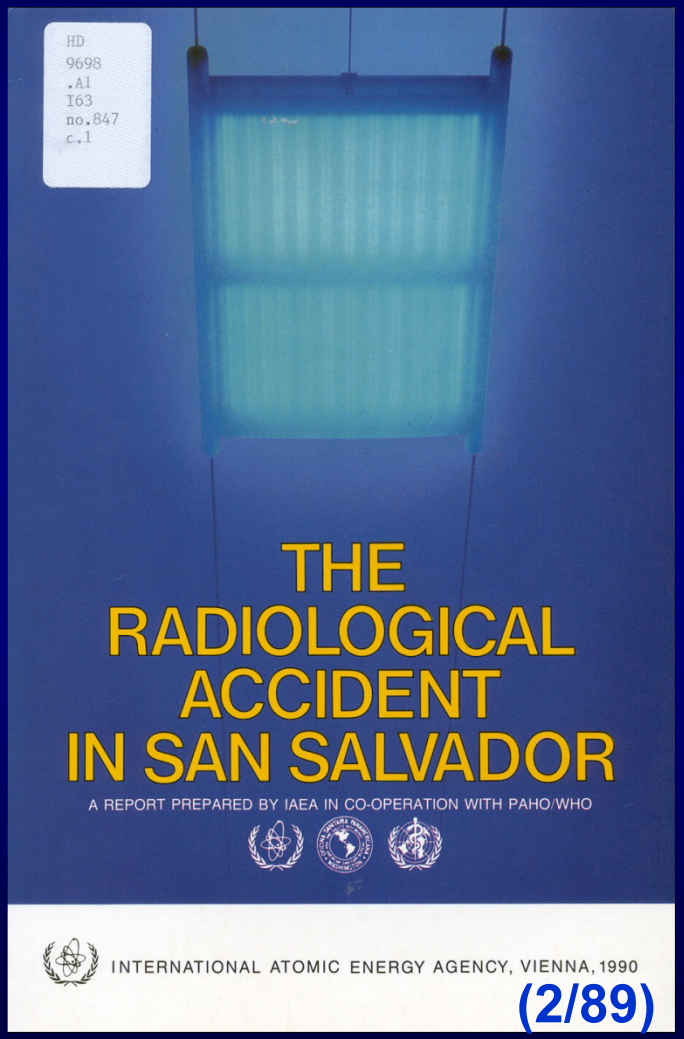

IRRADIATORS

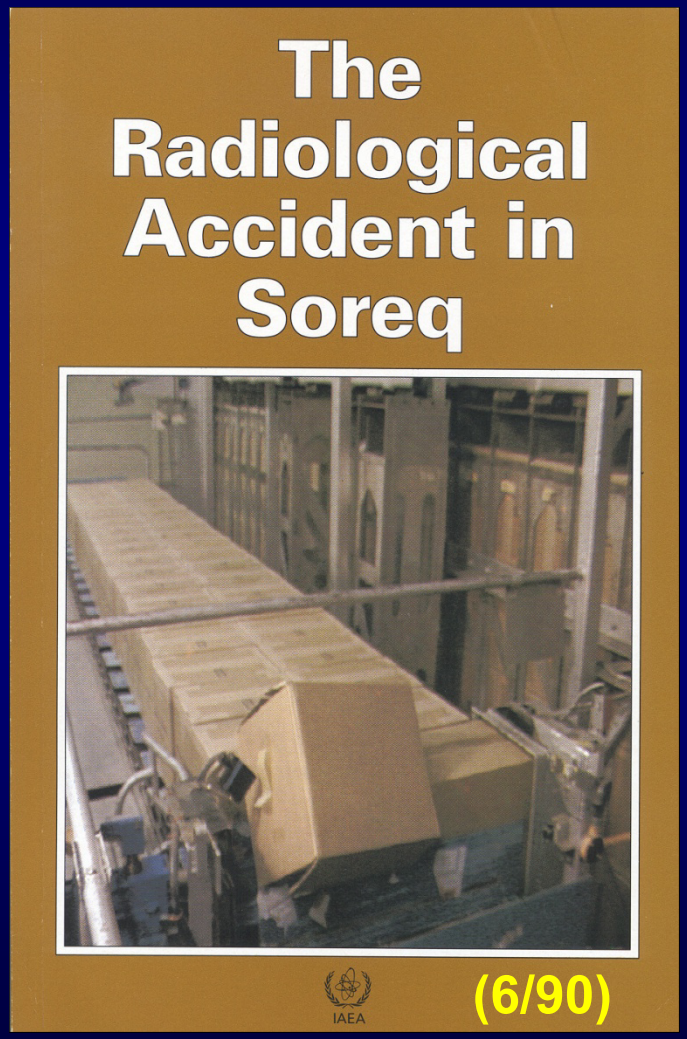

Category IV
Pool Type Irradiator

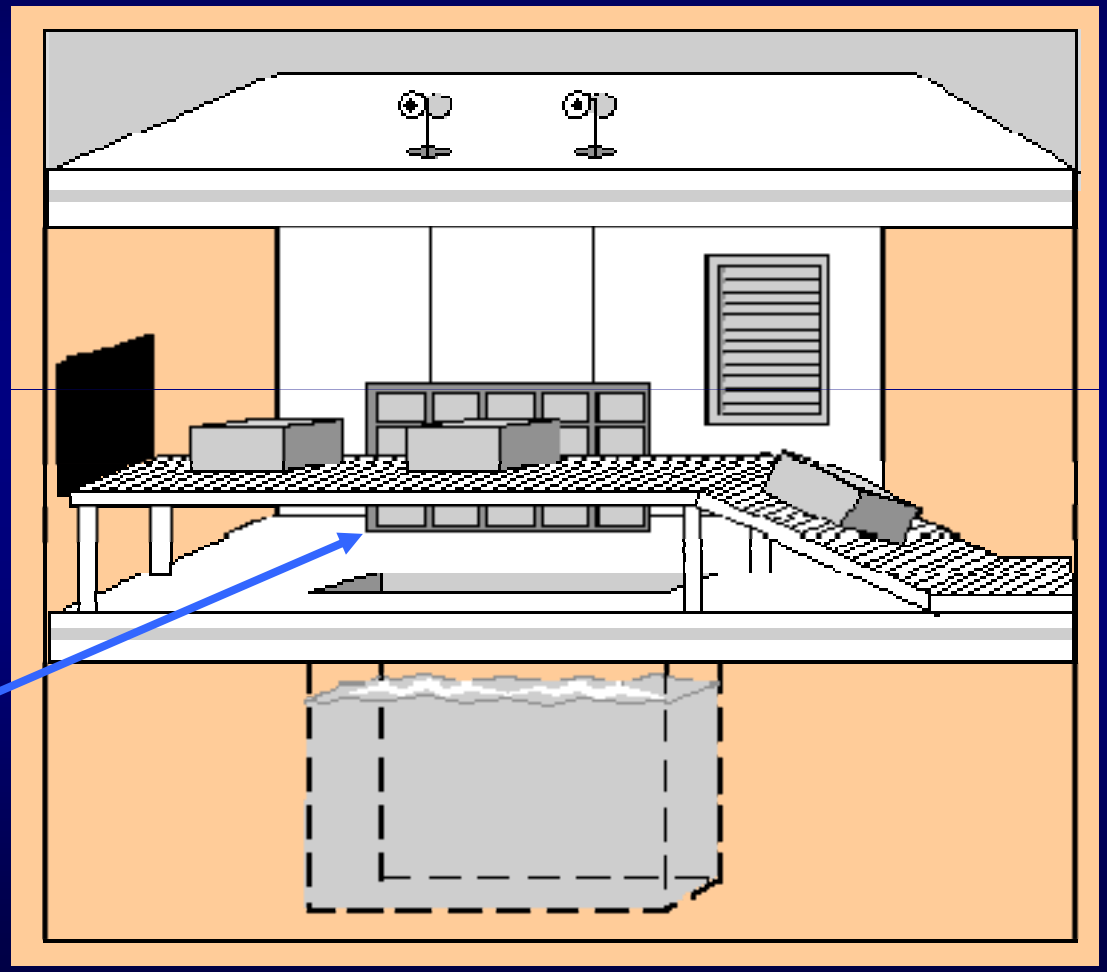

(Source Rack)

Category IV Irradiator Sources

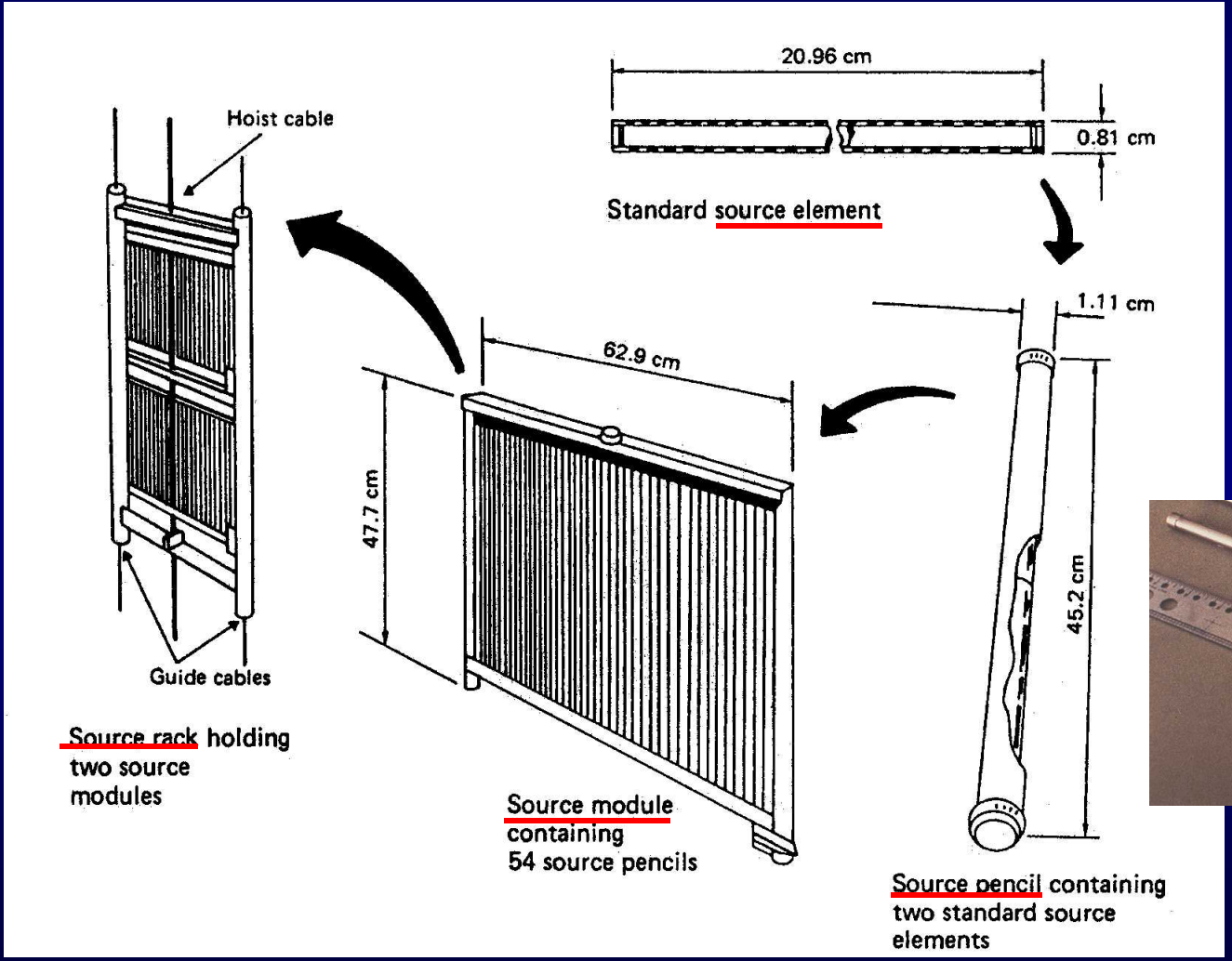

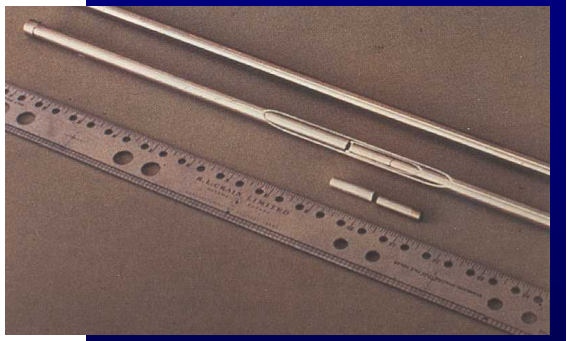

U.S. Irradiator Accidents

USA - Georgia (1988)

- Category IV - 1.2 MCi Cesium-137
- No injuries & no doses
- Contaminated Pool Water (1 Leaking Capsule out of 252)
- Decontamination Completed 1992

USA - Puerto Rico (2004)

- Category IV - 4 MCi Cobalt-60
- Doses - 2.8 & 4.4 rem in a few seconds
- Injuries - none

NRC AIT - Stuck 2MCi ^{60}Co Source Entry into Pool Irradiator (2004)

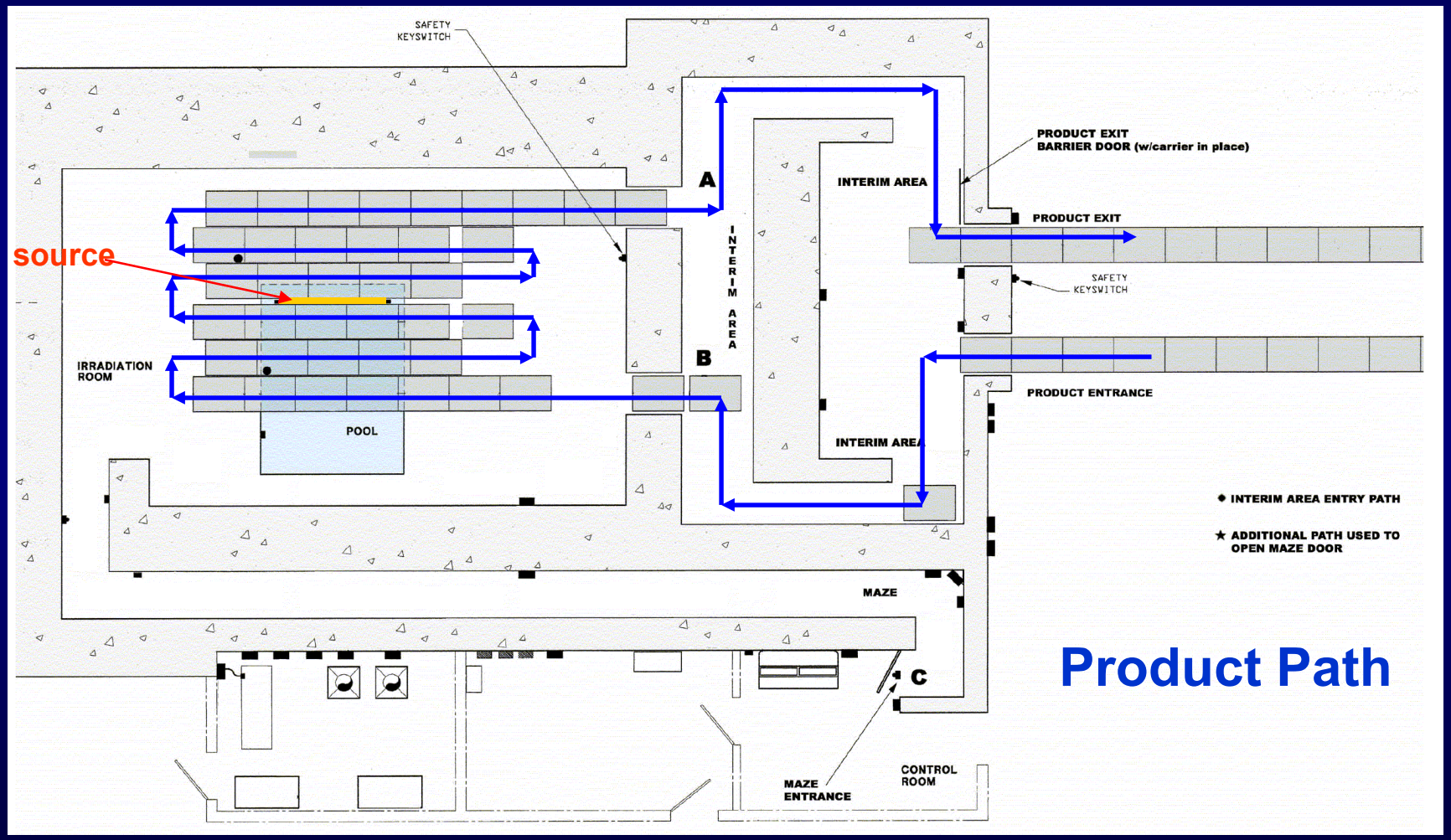

~11:30 AM - walk from product Exit Door to “A” to “B” to “C”

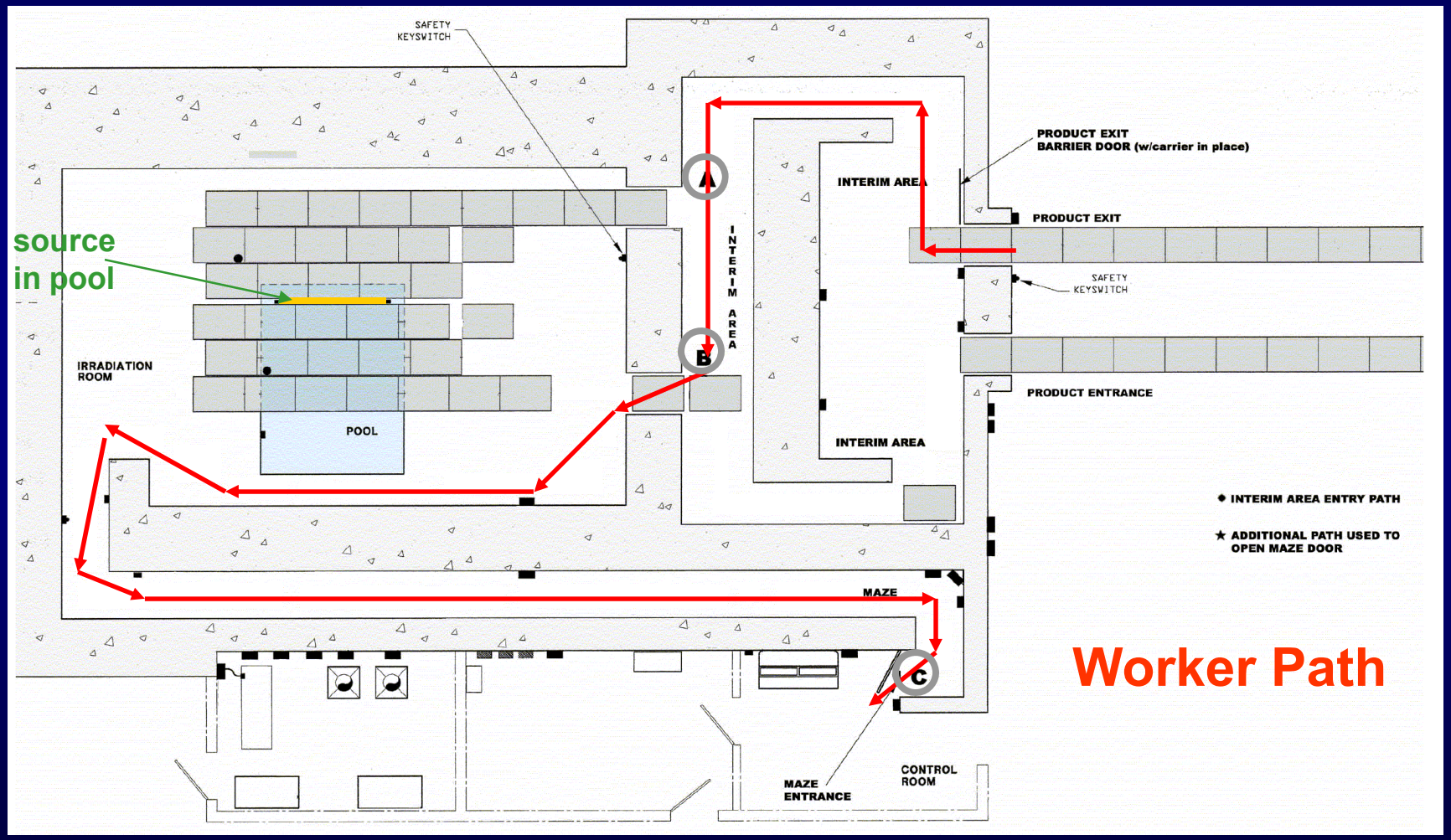

~ 1:00 PM - walk from product Exit Door to “A” to “B” stop and return to Exit Door

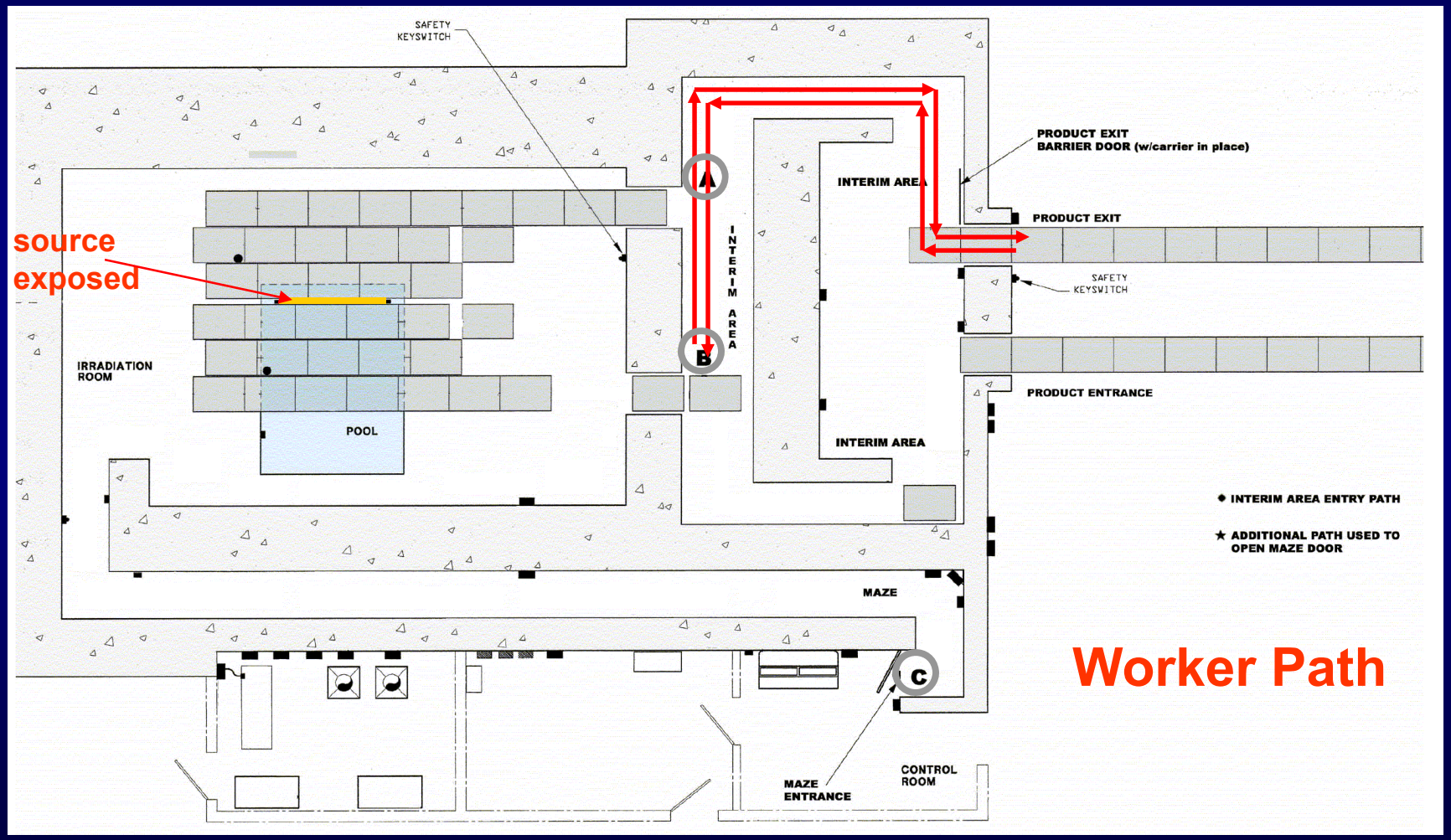

~ 1:00 PM - intended path from product Exit Door to "A" to "B" to "C"

NOTE: Dose rates calculated for second entry with one source rack unshielded (2,000,000 Ci ^{60}Co)

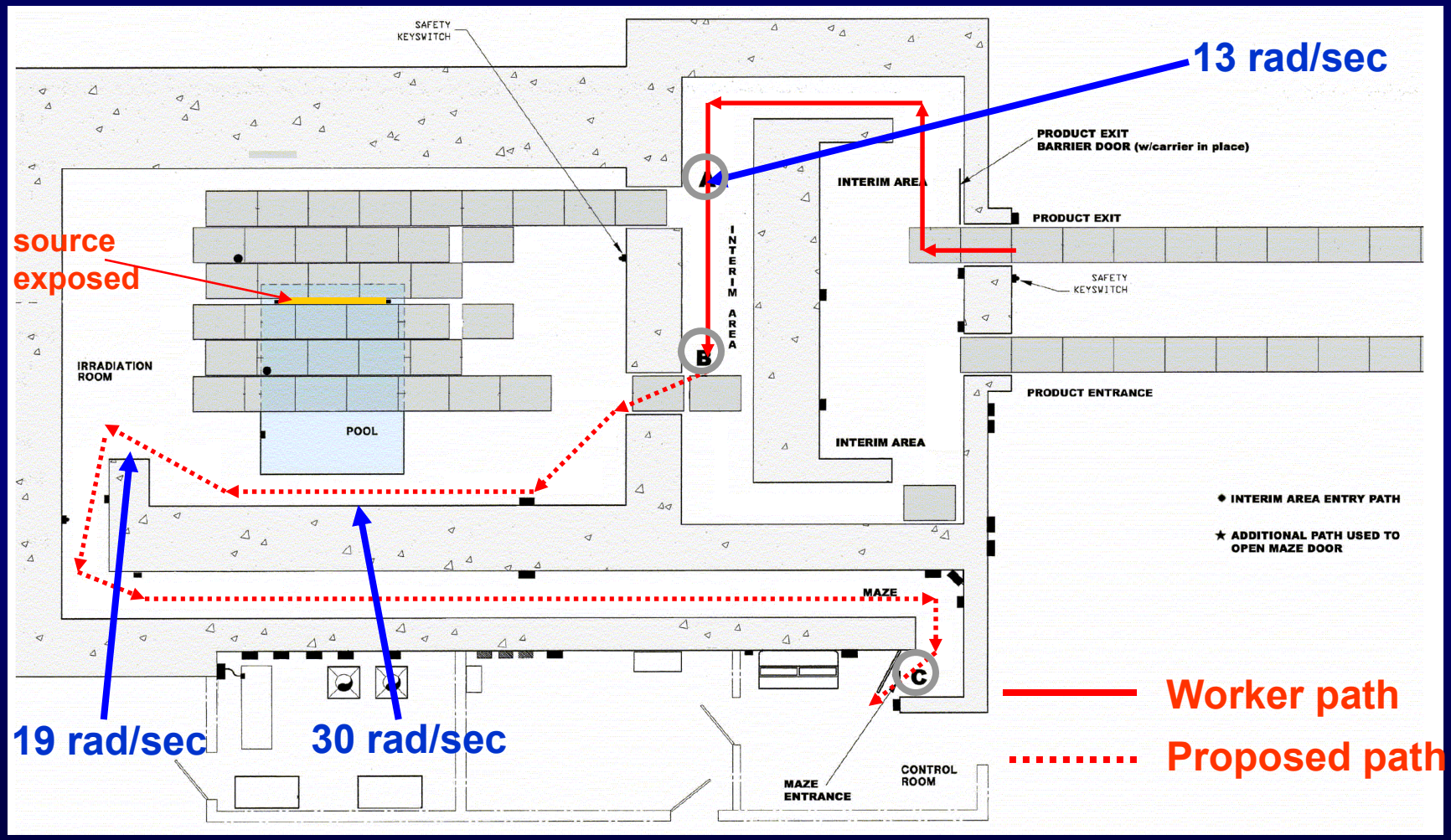

Dose Reconstruction

Health Physics Skills

+

Investigative Skills

(CSI - NRC)

Dose Reconstruction Can Be as Detailed as You Want (or Need)

- "Back of the envelope" (estimate)
- Routine (calculate)
- Meticulous (expert consultant)

Teletherapy Accident

Riverside Methodist Hospital OH (75)

- **Incorrect Decay Chart**
- **400 patients overexposed (10%-40%)**

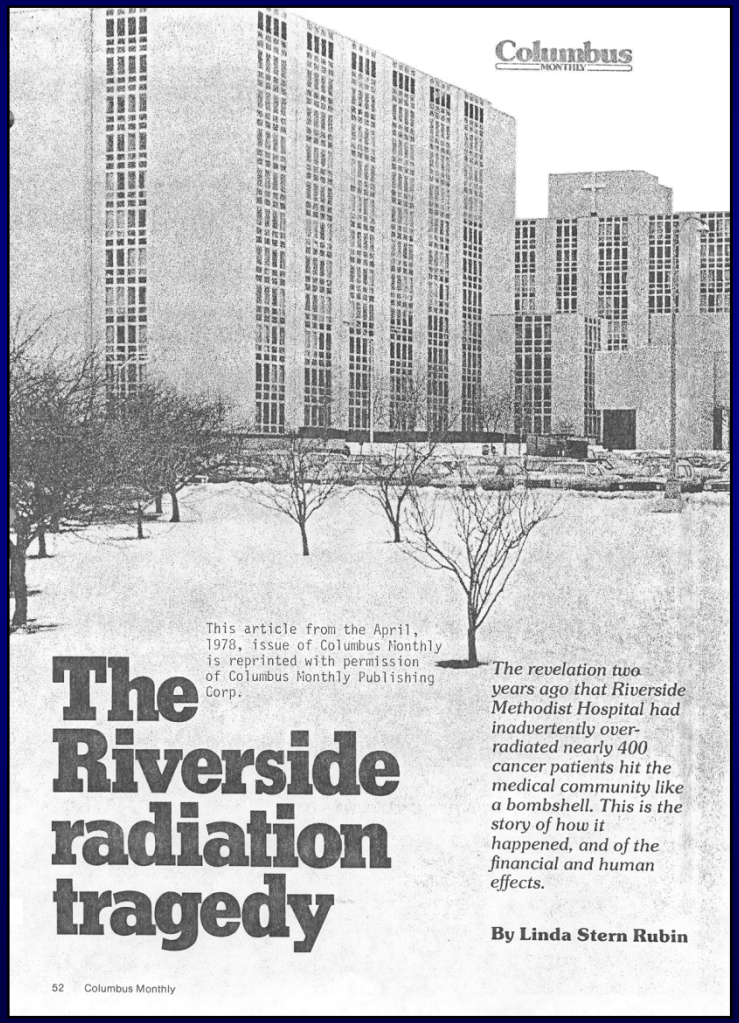

Columbus MONTHLY

This article from the April, 1978, issue of Columbus Monthly is reprinted with permission of Columbus Monthly Publishing Corp.

The Riverside radiation tragedy

The revelation two years ago that Riverside Methodist Hospital had inadvertently over-radiated nearly 400 cancer patients hit the medical community like a bombshell. This is the story of how it happened, and of the financial and human effects.

By Linda Stern Rubin

52 Columbus Monthly

Some NRC Dose Reconstructions Incident Investigation Team Reports

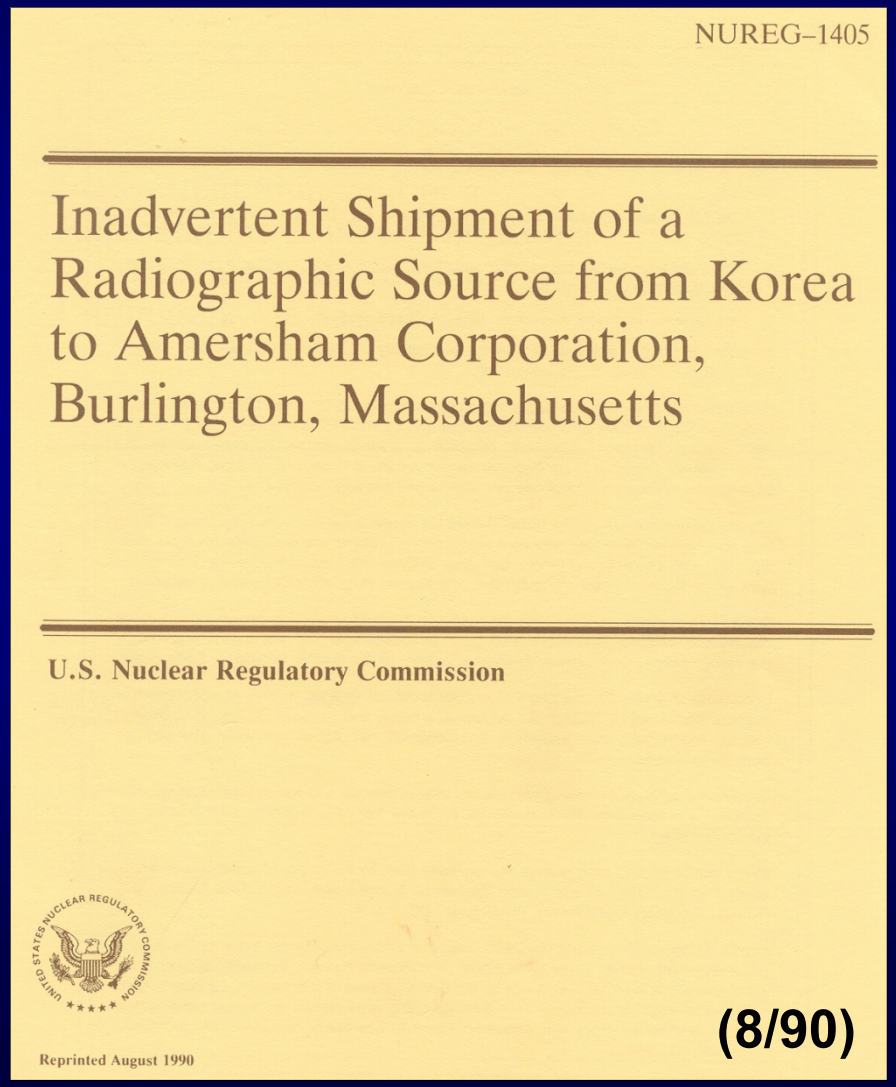

NUREG–1405

Inadvertent Shipment of a Radiographic Source from Korea to Amersham Corporation, Burlington, Massachusetts

U.S. Nuclear Regulatory Commission

Reprinted August 1990

(8/90)

Source Shipment

Radiography Source Changer similar to the one involved in the Korea Shipment Incident

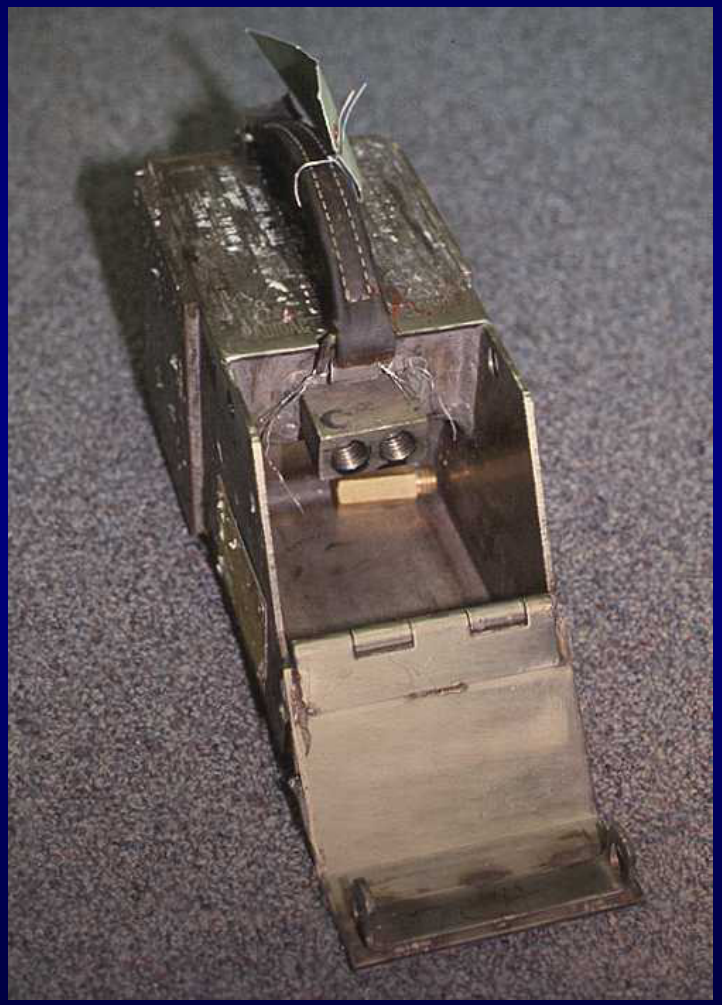

Source Shipment

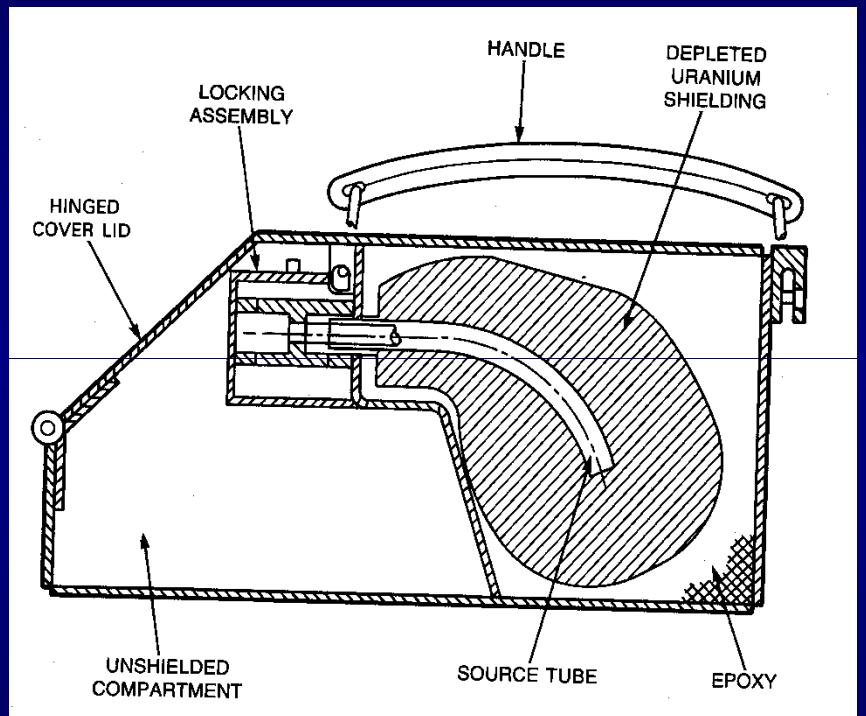

Figure 7.2 Cross Section of a Model 500-SU Source Changer

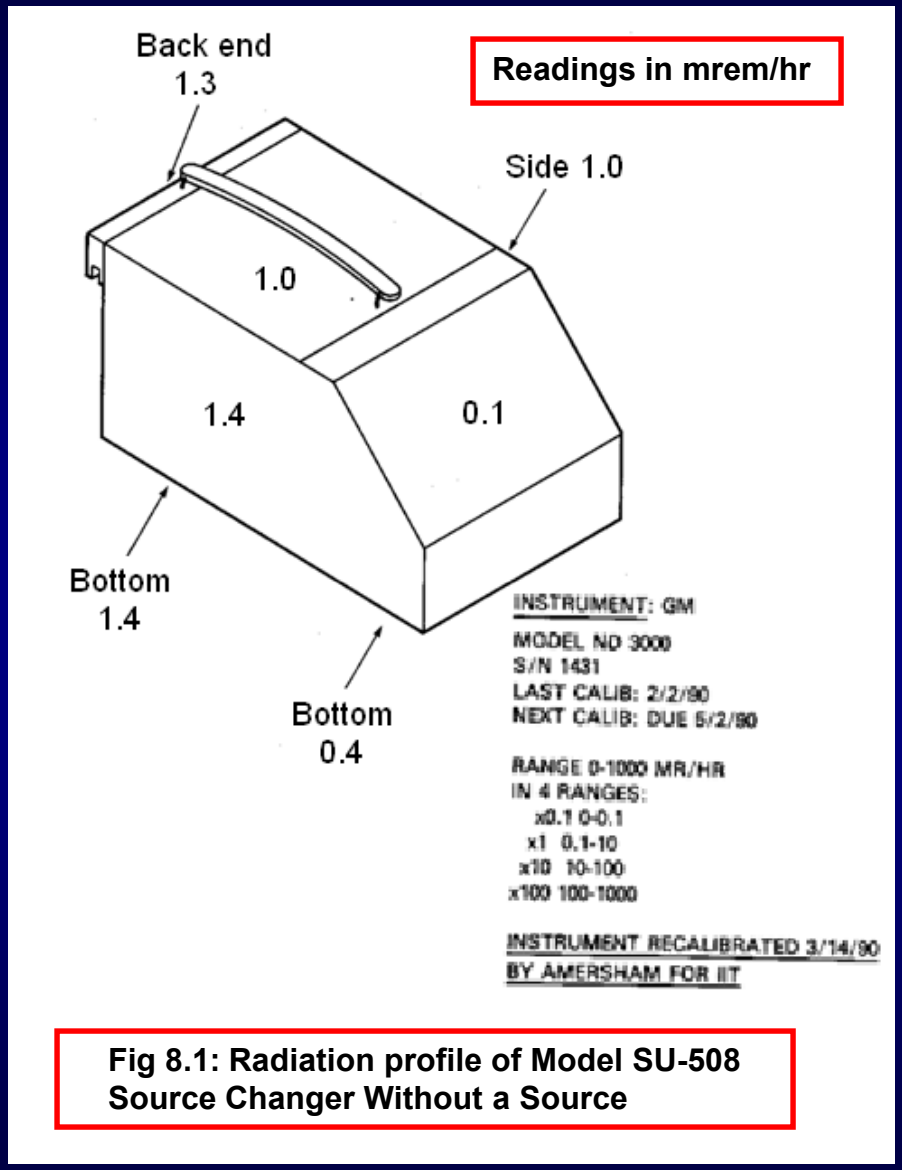

Fig 8.1: Radiation profile of Model SU-508 Source Changer Without a Source

Source Shipment

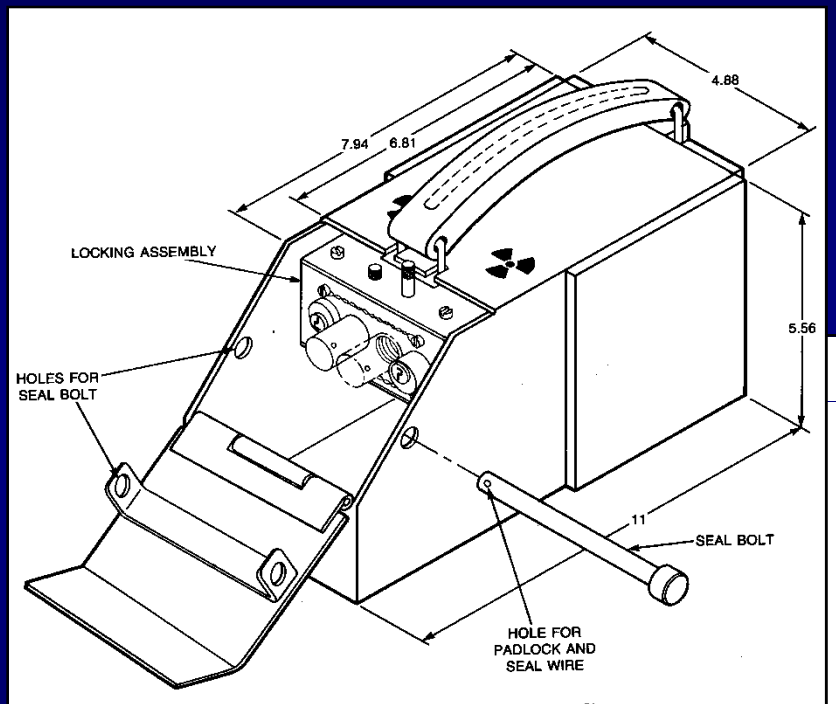

Figure 7.1 External View of Model 500-SU Source Changer

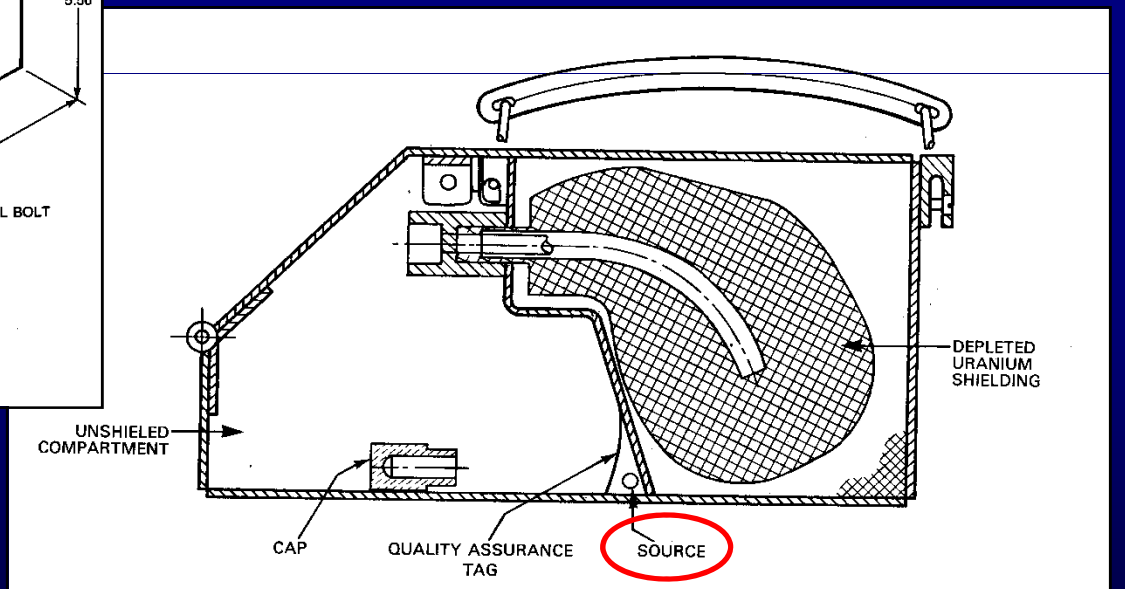

Figure 2.20 Source Changer Showing Location of Source in Unshielded Area

Source Data

TVL HVL

Material	Iridium-192	
	1/10 Value Layer*	1/2 Value Layer*
Lead	0.64 inch	0.19 inch
Steel	2.0 inches	0.61 inch
Concrete	6.2 inches	1.9 inches
Aluminum	6.2 inches	1.9 inches

*1/10 value and 1/2 value layers are the thicknesses of material needed to reduce the radiation intensity (Roentgens/Hr.) to 1/10 and 1/2 of the original intensity, respectively.

Figure B.4 Thickness of Shielding To Reduce Iridium-192 Radiation

Dose Rates per Hour per Curie	
Distance	Iridium^{192}
1 FOOT	5.2 R
2 FEET	1.3 R
4 FEET	325 MR
8 FEET	81 MR
10 FEET	52 MR

Γ

Figure B.3 Iridium-192 Dose Rates vs. Distance

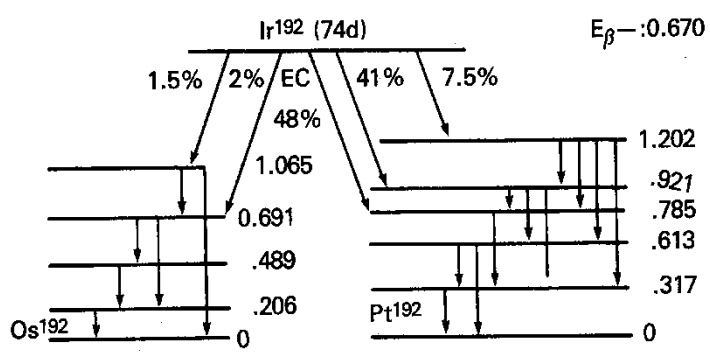

Figure B.2 Simplified Decay Scheme for Iridium-192

Equations

$$A_t = A_o e^{-0.693t/T_{1/2}}$$ (Eq. 1)

decay Equation

where A_t is the corrected source activity (curies) at day t
A_o is the source activity on April 13, 1989 (56 curies)
t is the elapsed time in days since April 13, 1989
$T_{1/2}$ is the half-life of iridium-192 (74 days)

$$R = 5.2\ A_t$$ (Eq. 2)

Gamma Constant

where R is exposure rate in R/hr at 1 foot from an unshielded iridium-192 source of activity A_t

$$E_d = \frac{RT \times 10^3}{d^2}$$ (Eq. 3)

Point Source Equation

where E_d is exposure in millirem at distance d
T is exposure time in hours
d is distance in feet from the unshielded iridium-192 source
10^3 is a factor converting rem to millirem

Source Shipment

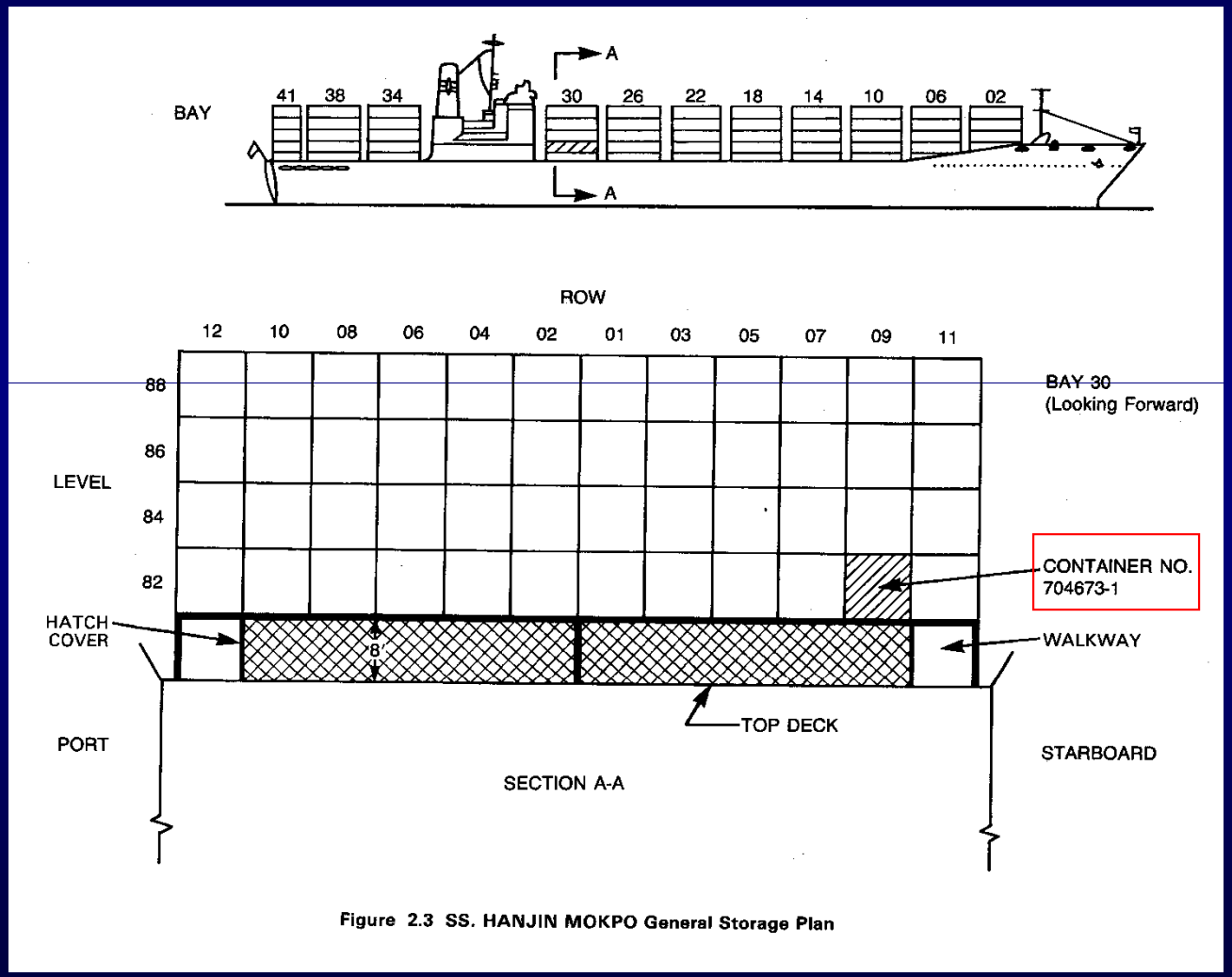

Figure 2.3 SS. HANJIN MOKPO General Storage Plan

Source Shipment

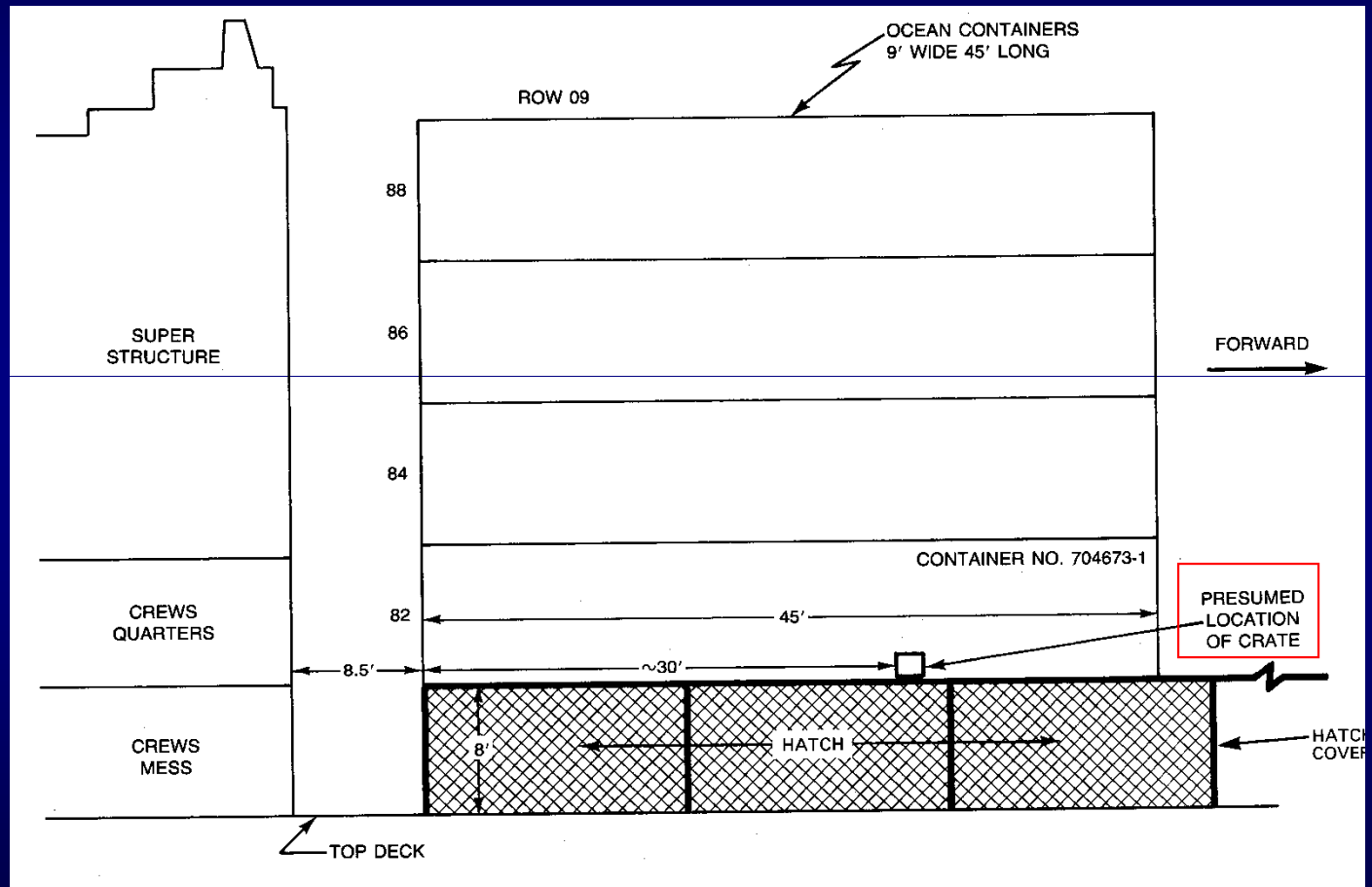

Figure 2.4 SS. HANJIN MOKPO Bay 30, Row 9

Source Shipment

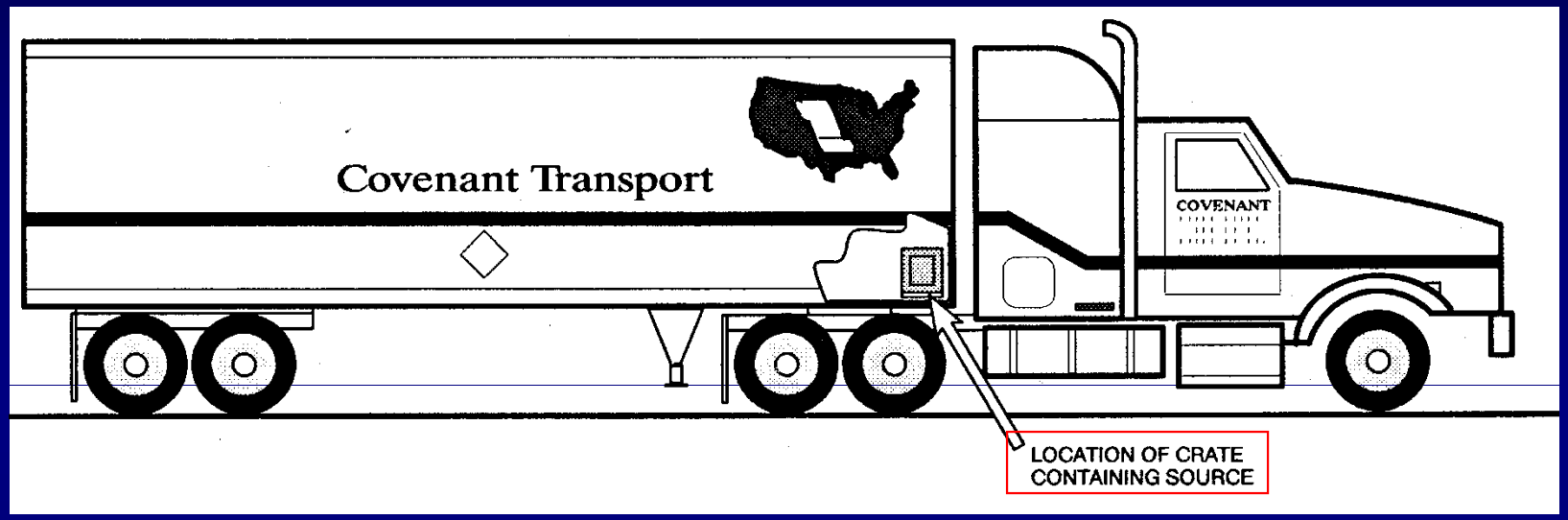

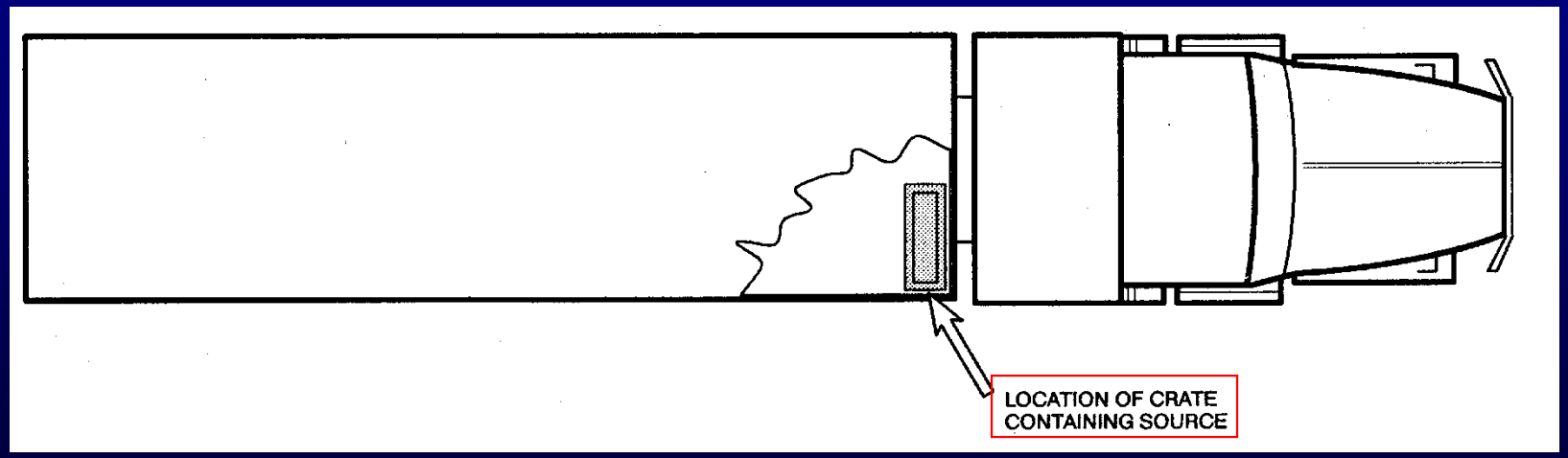

Source Shipment

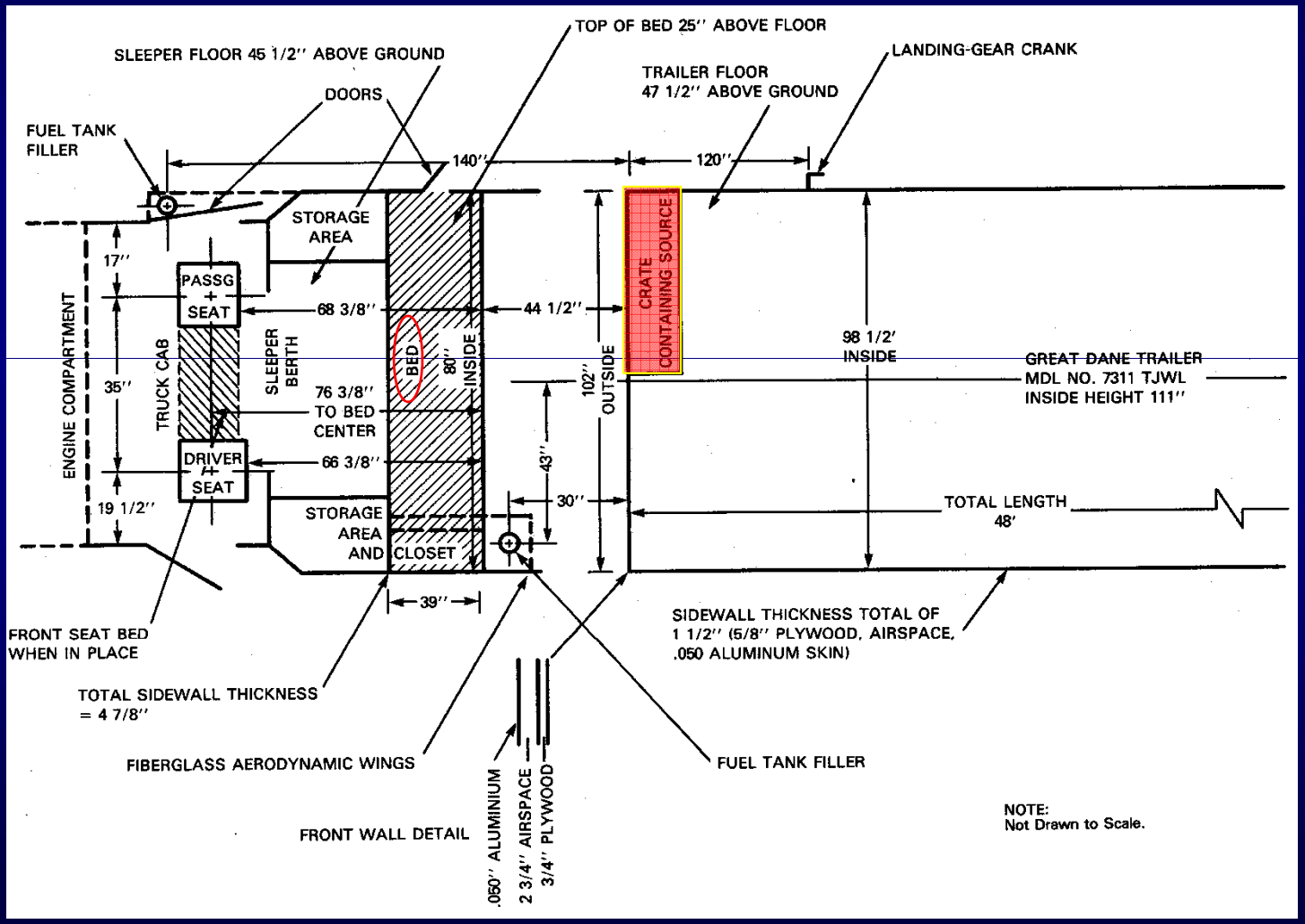

Source Shipment

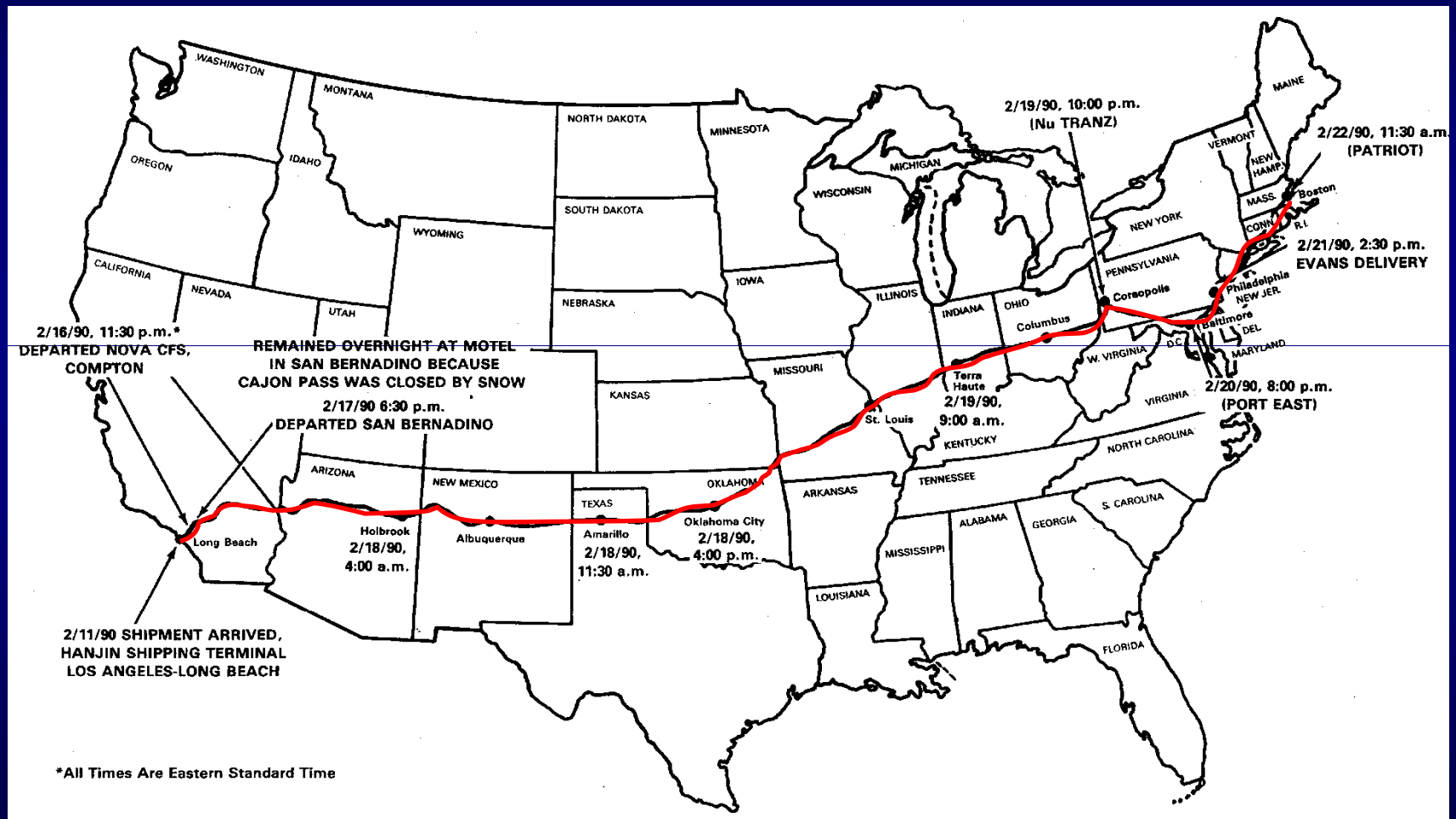

Figure 2.12 Route of Covenant Truck No. 311, February 16-22, 1990

Loss of Control of Source

NUREG–1480

Loss of an Iridium–192 Source and Therapy Misadministration at Indiana Regional Cancer Center Indiana, Pennsylvania, on November 16, 1992

U.S. Nuclear Regulatory Commission

Loss of Control of Source

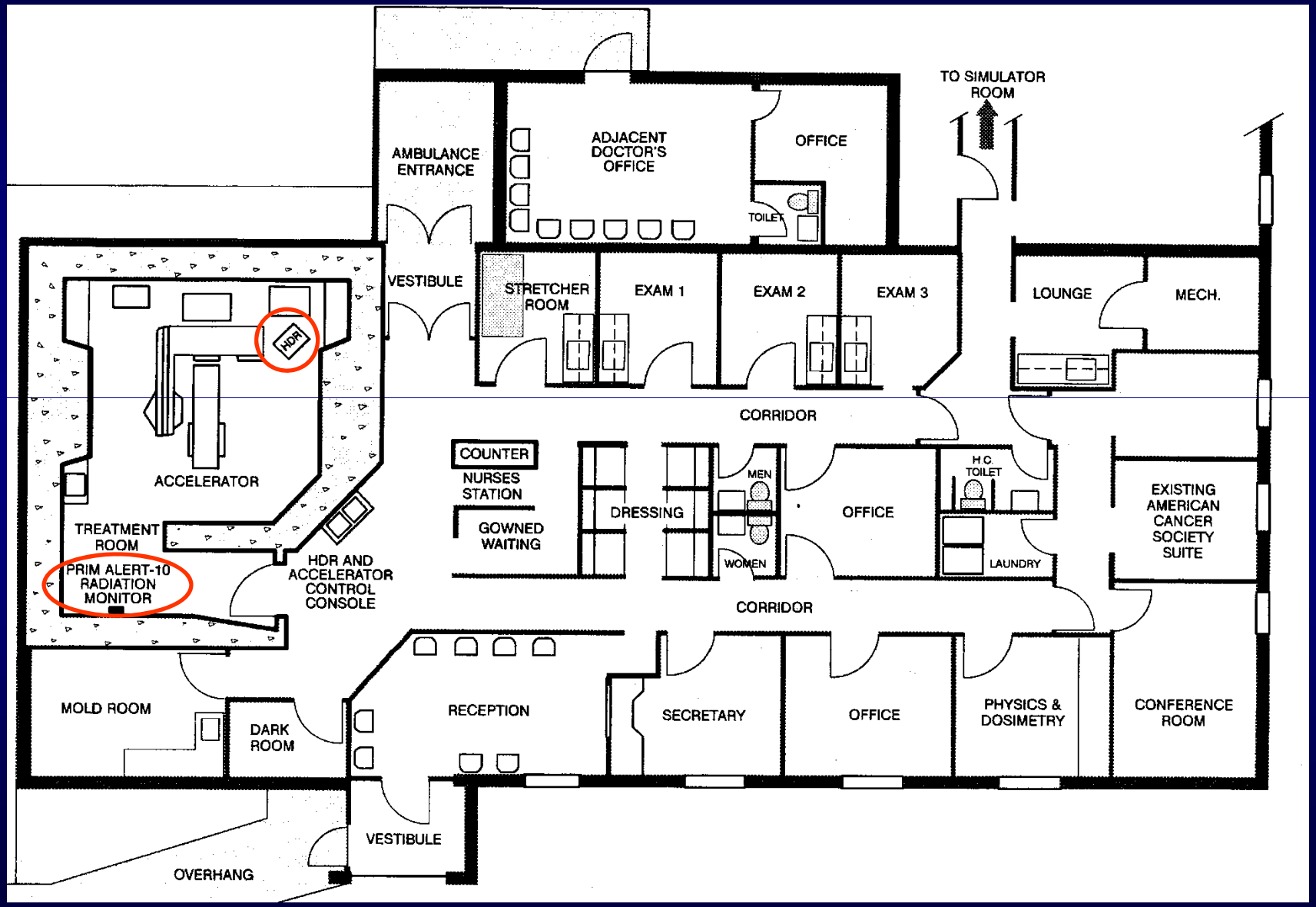

High Dose Rate Remote Afterloading (HDR)

Source travels from unit, through catheter (plastic guide tube) into patient

HDR Unit and Catheter System

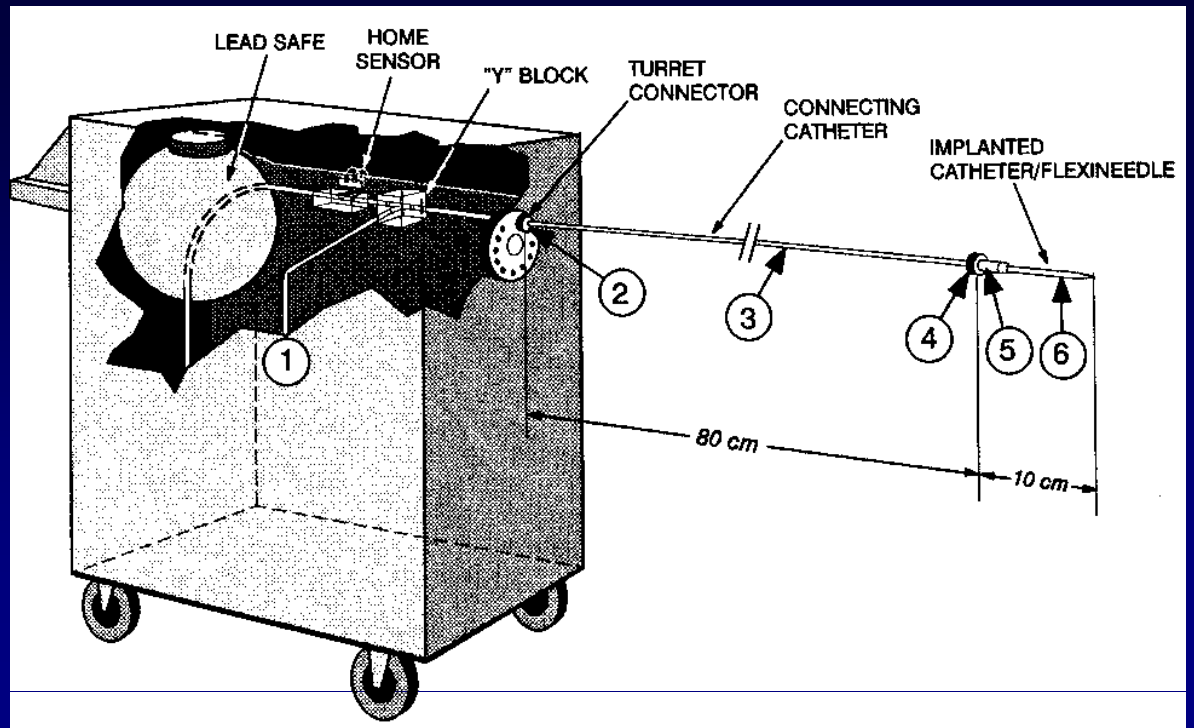

1. Inside HDR Afterloader
2. Turret connection (catheter connection)
3. Connecting catheter (teflon tube)
4. Connecting catheter connector
5. Flexineedle catheter connector
6. Flexineedle catheter

Figure 4.1 Source Wire – Possible Failure Areas

HDR Catheter

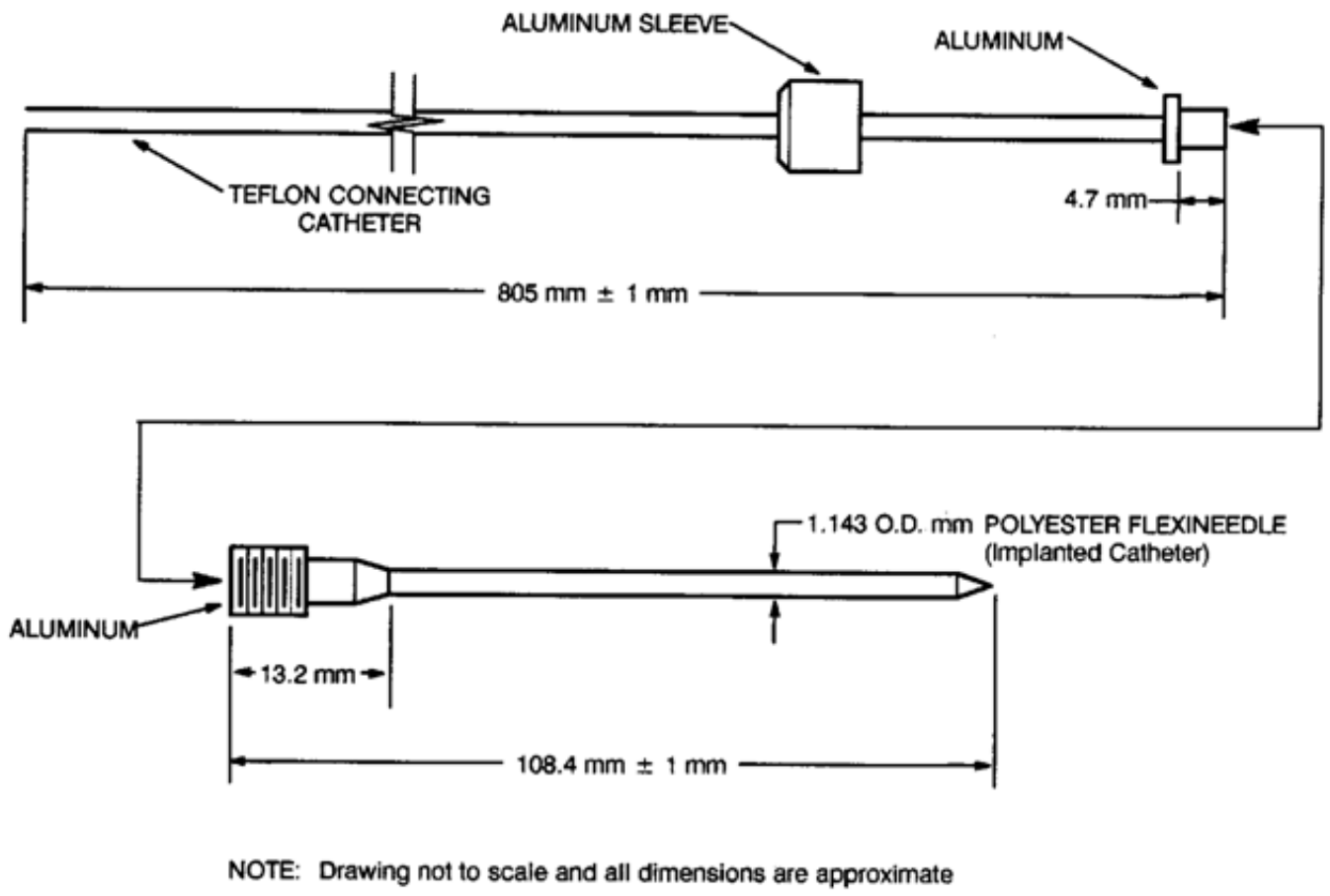

NOTE: Drawing not to scale and all dimensions are approximate

Figure 3.8 Connecting Catheter and Flexineedle Unassembled

HDR Source

IR-192 Seed in Titanium/Nickel
Model #SL -777

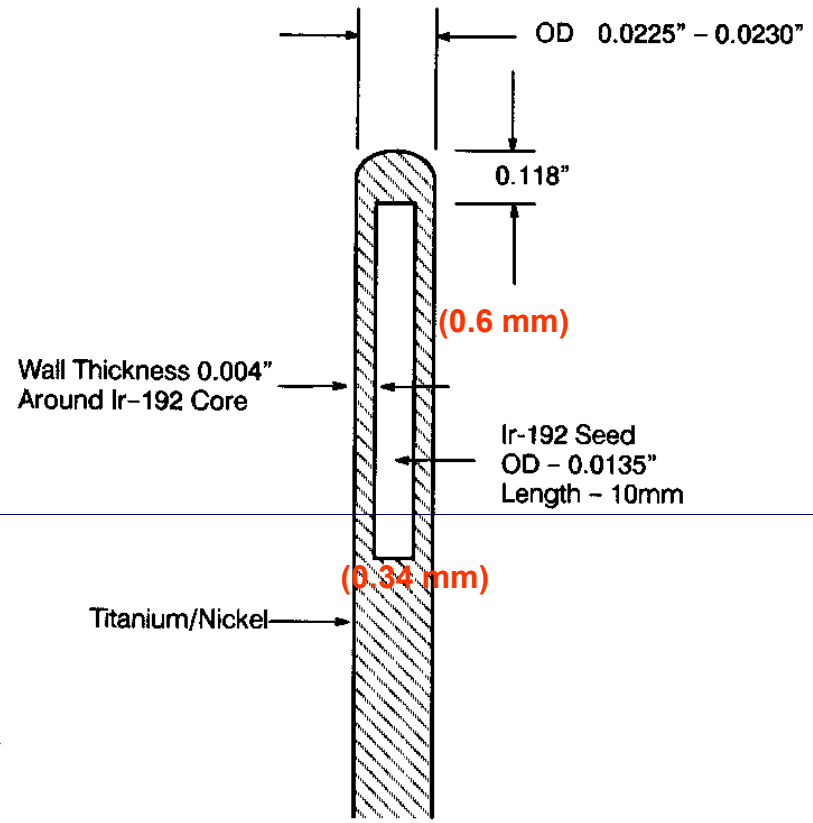

Ir-192 Seed in Titanium/Nickel

An Ir-192 Seed is encapsulated firmly inside a solid titanium/nickel wire.
The overall length of the Ir-192 Seed is 10mm

The above composite has passed all ANSI requirements for sealed sources.

Figure 3.9 Iridium-192 Seed inTitanium/ Nickel

^{192}Ir Decay Scheme

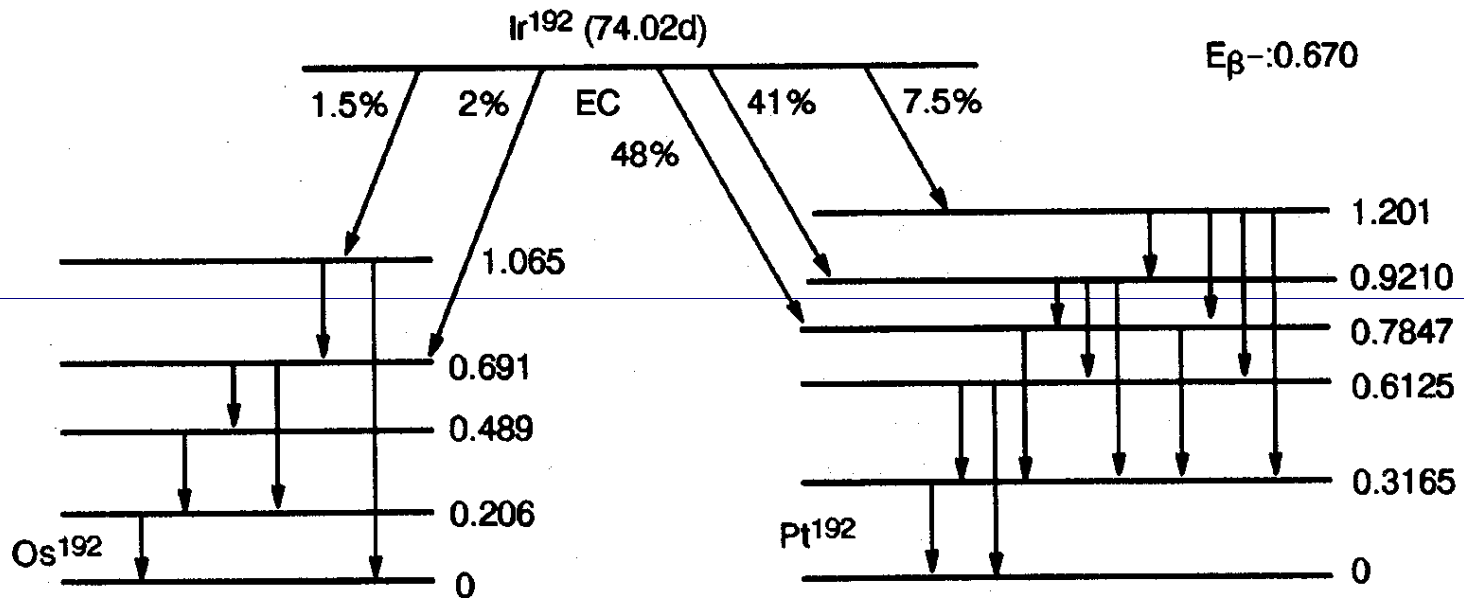

Figure B.1 Simplified Decay Scheme for Iridium-192

^{192}Ir Decay Scheme

Iridium-192*

Atomic number: 77
Atomic weight: 192
Half life: 74.02 days

Betas

	Probability per decay	Maximum (MeV)	Average (MeV)
1.	.056500	.255950	.070800
2.	.414000	.536080	.161200
3.	.483000	.672420	.208900
4.	.004000	.844530	.275900
5.	.000987	.093000	.024933

Electrons

	Probability per decay	Energy (MeV)
1.	.031078	.006880
2.	.001594	.048300
3.	.005227	.131920
4.	.003649	.192830
5.	.001180	.202750
6.	.076020	.007240
7.	.003505	.051000
8.	.001192	.067951
9.	.001300	.122470
10.	.019237	.217560
11.	.017896	.230060
12.	.044658	.238110
13.	.008792	.282080
14.	.002867	.292660
15.	.007716	.294580
16.	.019470	.302630
17.	.002511	.305160
18.	.004839	.313210
19.	.001483	.315790
20.	.010236	.389680
21.	.002946	.454190
22.	.001509	.526020

Gammas & x-rays

	Probability per decay	Energy (MeV)
1.	.014625	.008910
2.	.011323	.061487
3.	.019555	.063001
4.	.008399	.071400
5.	.004674	.201310
6.	.032873	.205800
7.	.002615	.283260
8.	.007264	.374480
9.	.031628	.484580
10.	.003985	.489060
11.	.000797	.423070
12.	.040934	.009440
13.	.026350	.065022
14.	.045197	.066832
15.	.019675	.075700
16.	.001806	.136350
17.	.290150	.295960
18.	.296780	.308460
19.	.828530	.316510
20.	.006645	.416460
21.	.480550	.468070
22.	.045735	.588580
23.	.082024	.604410
24.	.053357	.612460
25.	.003016	.884510
26.	.000986	.871730

yield or abundance

Calculations

Sample Hand Calculation (in English Units)

For correcting for radioactive decay of a source,

$$A_t = A_o B e^{\ln 2 * t / T_{1/2}}$$

Decay Equation

where A_t = Corrected source activity (Ci) at time t

A_o = Source activity on August 28, 1992 (8.942 Ci)

B = Dose build-up factor

t = Elapsed time in days since August 28, 1992

$T_{1/2}$ = Half-life of iridium-192 (74.02 days)

For calculating the exposure rate from a point source at a given distance,

$$\Gamma = 0.5 \sum f_x E_x \frac{R\text{-}m^2}{Ci\text{-}hr}$$

Rule of Thumb for Γ

where Γ = Exposure rate in R per hour at 1 meter from an unshielded iridium-192 source of Activity, A_t

f_x = Probability of a gamma ray being emitted

E_x = Gamma-ray energy in MeV

For iridium-192:

$$\Gamma = 0.48 \frac{R\text{-}m^2}{Ci\text{-}hr}$$

For calculating the exposure rate from iridium-192 for a specific time period,

$$E_d = \frac{\Gamma T}{d^2}$$

Point source equation

where E_d = Exposure in rem at distance, d

d = Distance in meters from the unshielded iridium-192 source

T = Exposure time in hours

Γ = Gamma constant (0.48 R-m²/Ci-hr)

Calculations

Build-up Contribution to Exposure Rate Calculations

As discussed in Section 7 of this report, the team concluded that (1) build-up factors were necessary to include in all exposure rate calculations and (2) there was very little attenuation owing to patient shielding. The following calculations illustrate these conclusions.

Calculation

Material: Muscle

Density (ρ): 1040 kilograms per cubic meter = 1.04 grams per cubic centimeter (g/cm^3) (Reference 5)

Mass Attenuation Coefficient (μ_m) [from interpolation] = 0.1151 square centimeters per gram (cm^2/g) for 320 keV gamma ray (Reference 5)

(Note: a 320 keV gamma ray was used since this is the most abundant Ir-192 gamma ray).

Linear Attenuation Coefficient(μ_l) $= \mu_m \times \rho = 0.1151\ cm^2/g \times 1.04\ g/cm^3$
$= 0.1197\ cm^{-1}$

LAC = MAC x ρ

Mean free path (mfp) $= 1/\mu_l = 1/0.1197\ cm^{-1} = 8.354\ cm$

Buildup equation

$\frac{X}{X_0} = B \exp(-\mu_l d)$, where

- X = Final exposure rate
- X_0 = Initial exposure rate
- B = Build-up factor
- d = Distance from the source (cm)
- μ_l = Linear attenuation coefficient (cm^{-1})

a) If d = 10 cm:

number of mfp's = 10 cm/8.354 cm = 1.20

B (for 1.20 mfp's and a gamma ray energy of 300 keV) = 3.35 (Reference 6)

Using the Equation above,

$\frac{X}{X_0} = 3.35 \exp(-0.1197\ cm^{-1} \times 10\ cm) = 1$ (i.e., no attenuation)

Patient Waiting to be Picked Up at Treatment Center

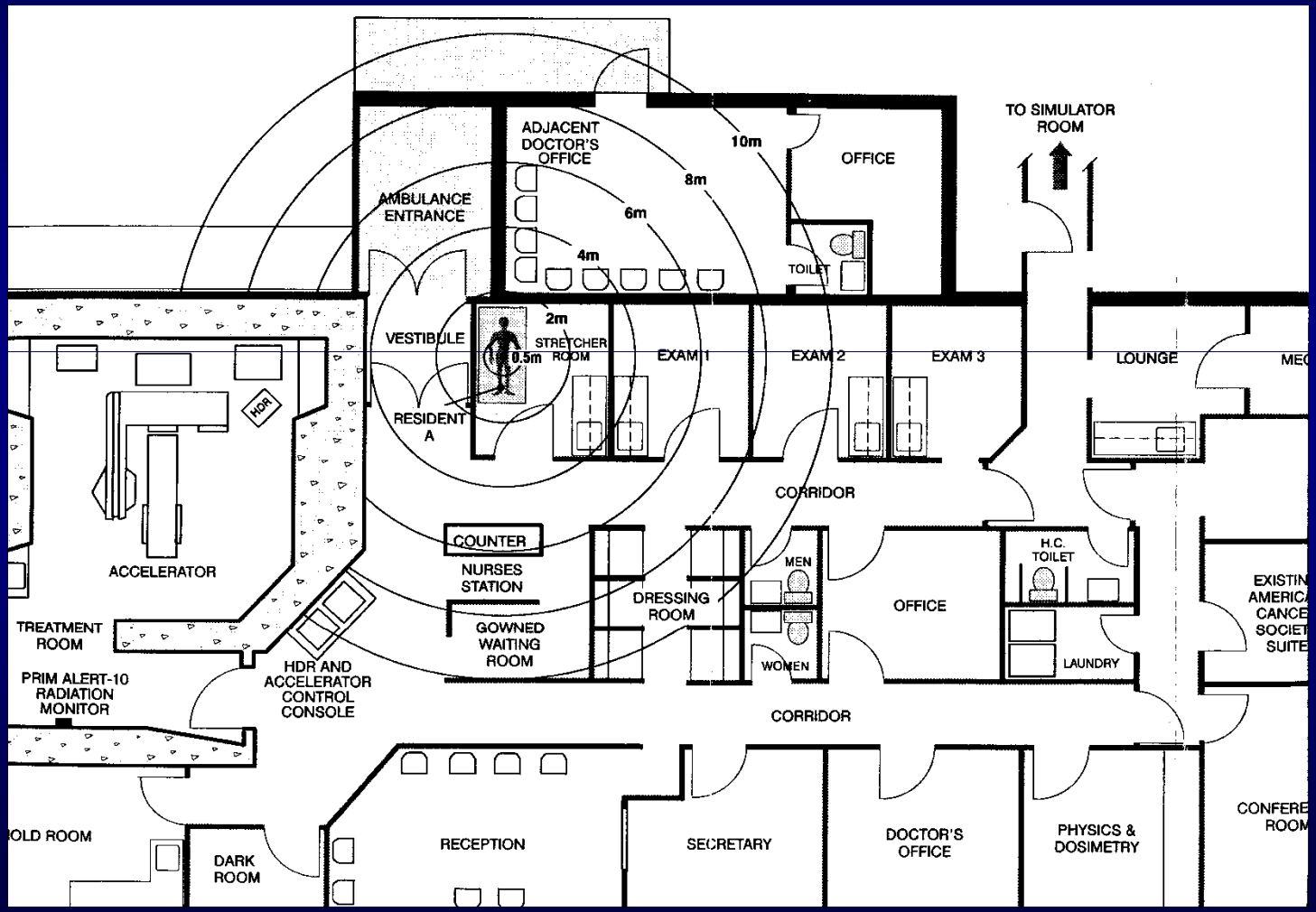

Patient Transported to Nursing Home

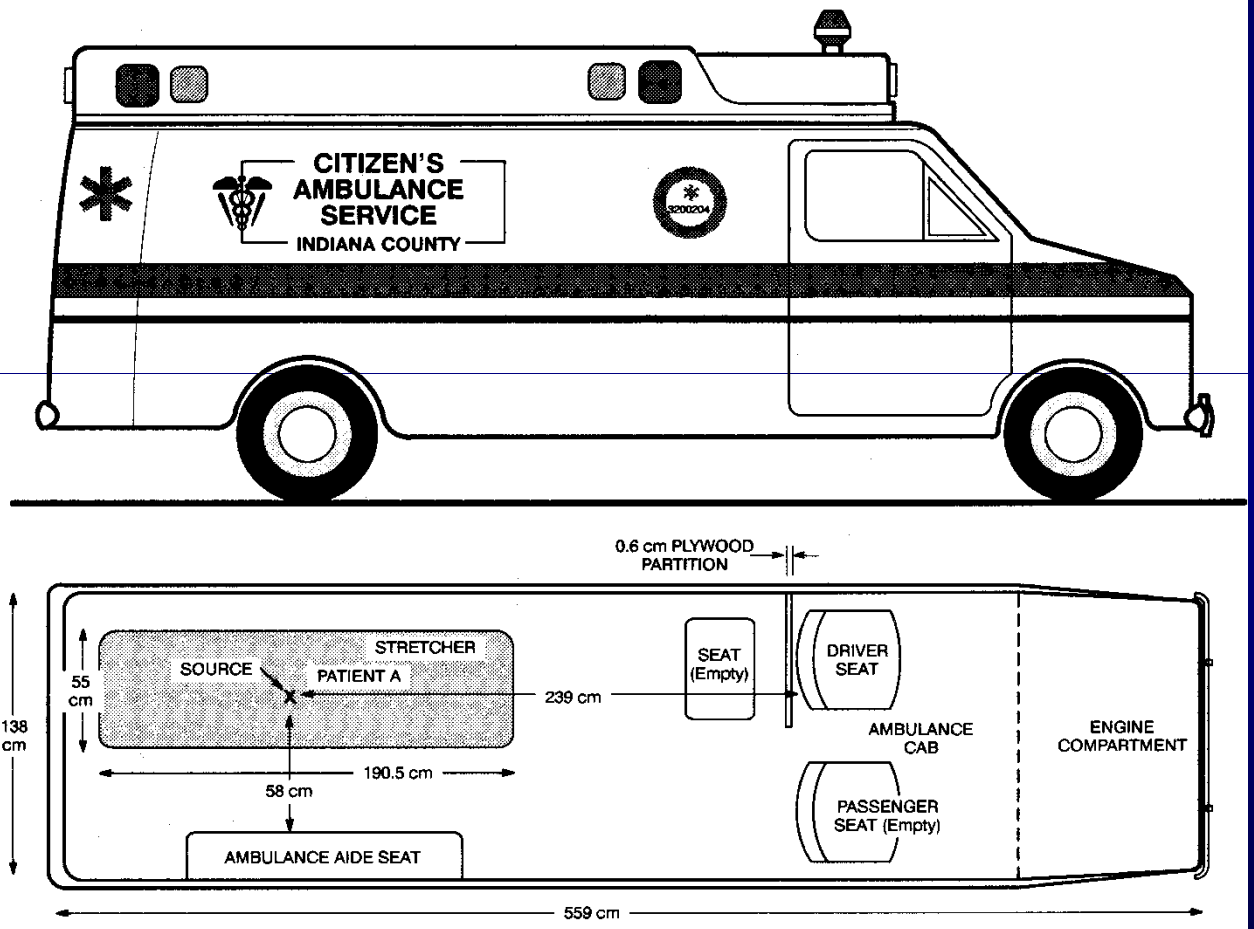

Figure 6.2 Location of Ambulance Staff and Patient A in Citizen's Ambulance

Patient at Nursing Home

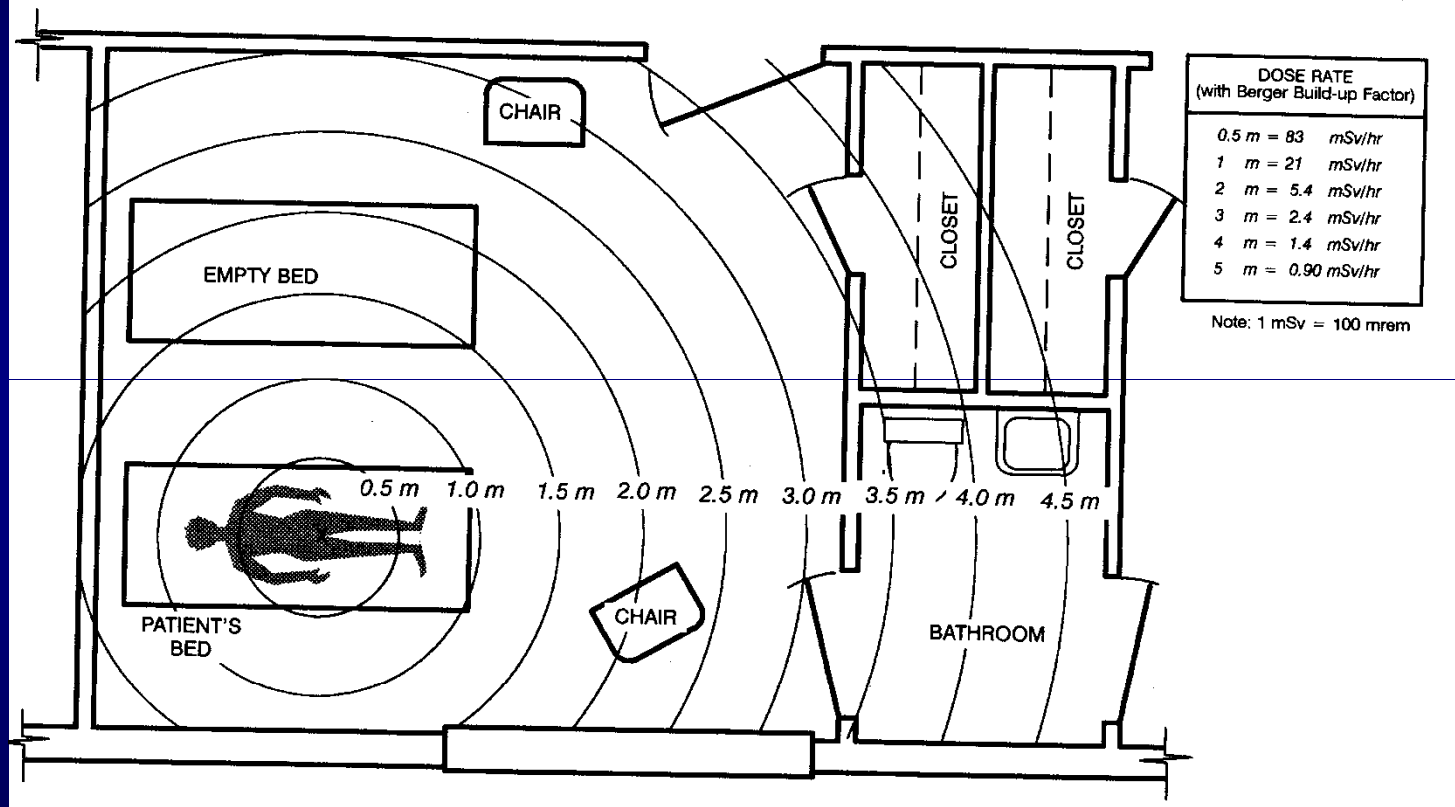

Figure 6.3 Diagram of Room 4B at the Scenery Hill Manor Nursing Home Showing Isodose Curves from the Iridium-192 Source on November 16, 1992

Dose Rate in Adjacent Nursing Home Rooms

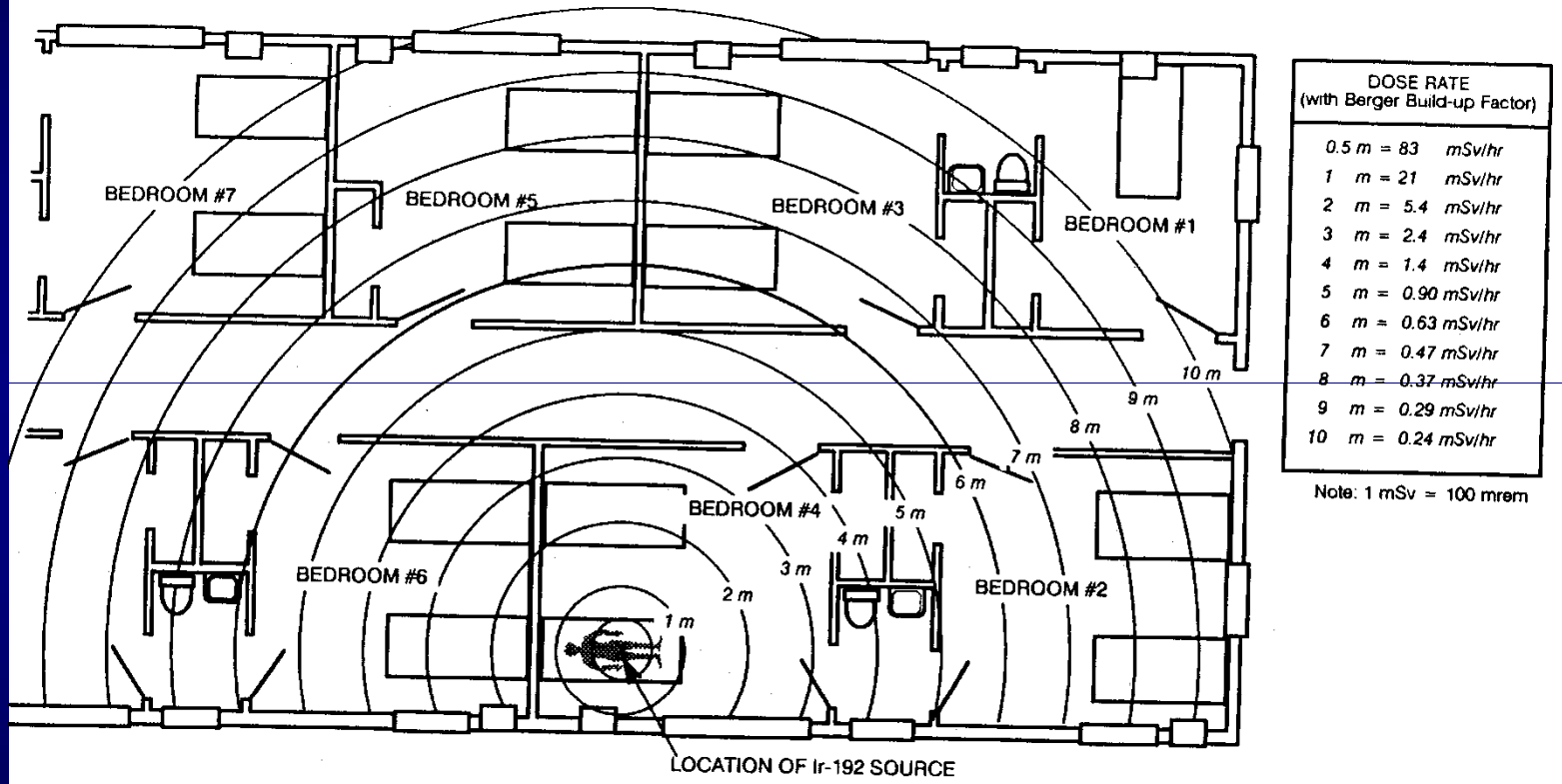

Figure 6.5 Diagram of Rooms Adjacent to Patient Room 4B Showing 1-Meter Isodose Curves from the Iridium-192 Source on November 16, 1992

Source in Trash

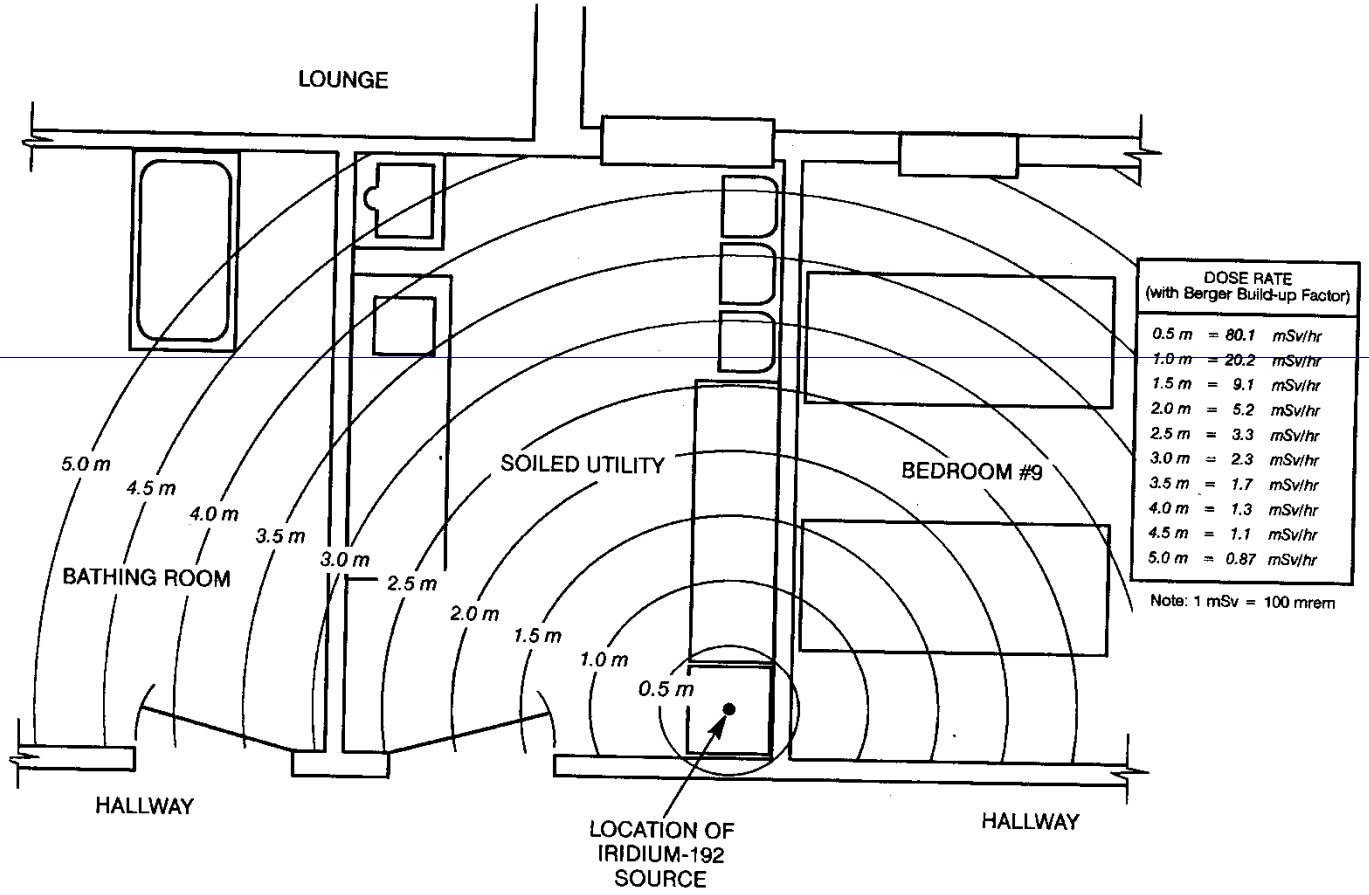

Figure 6.4 Diagram of the SHM Nursing Home Soiled Utility Room Showing Isodose Curves from the Iridium-192 Source on November 20, 1992

Dose Rate in Adjacent Areas

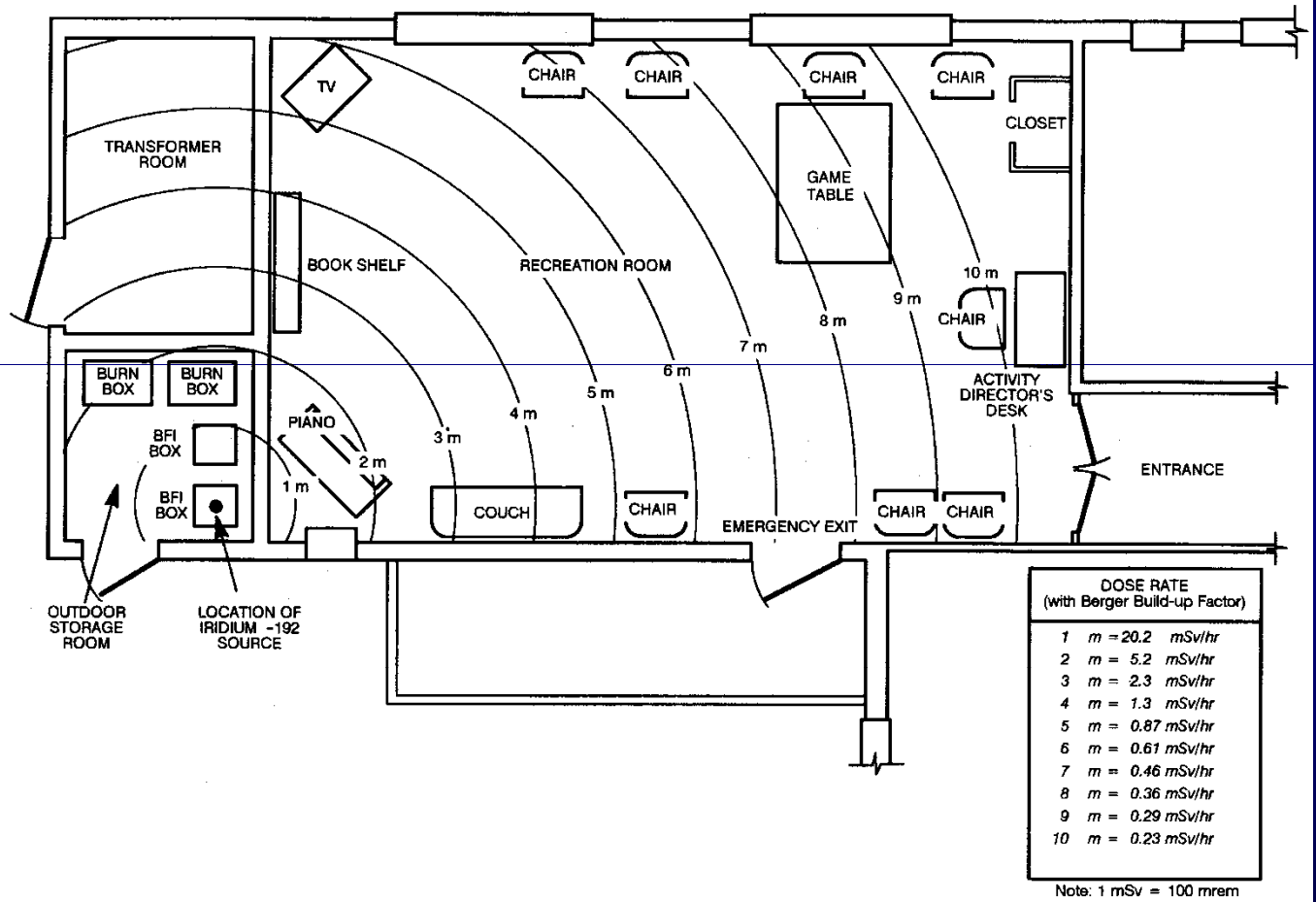

Figure 6.6 Detailed Diagram of the Scenery Hill Manor Nursing Home Recreation Room Showing Isodose Curves from the Iridium-192 Source Located in the Outside Storage Room from November 20 to 25, 1992

Source Transported to Waste Disposal Site

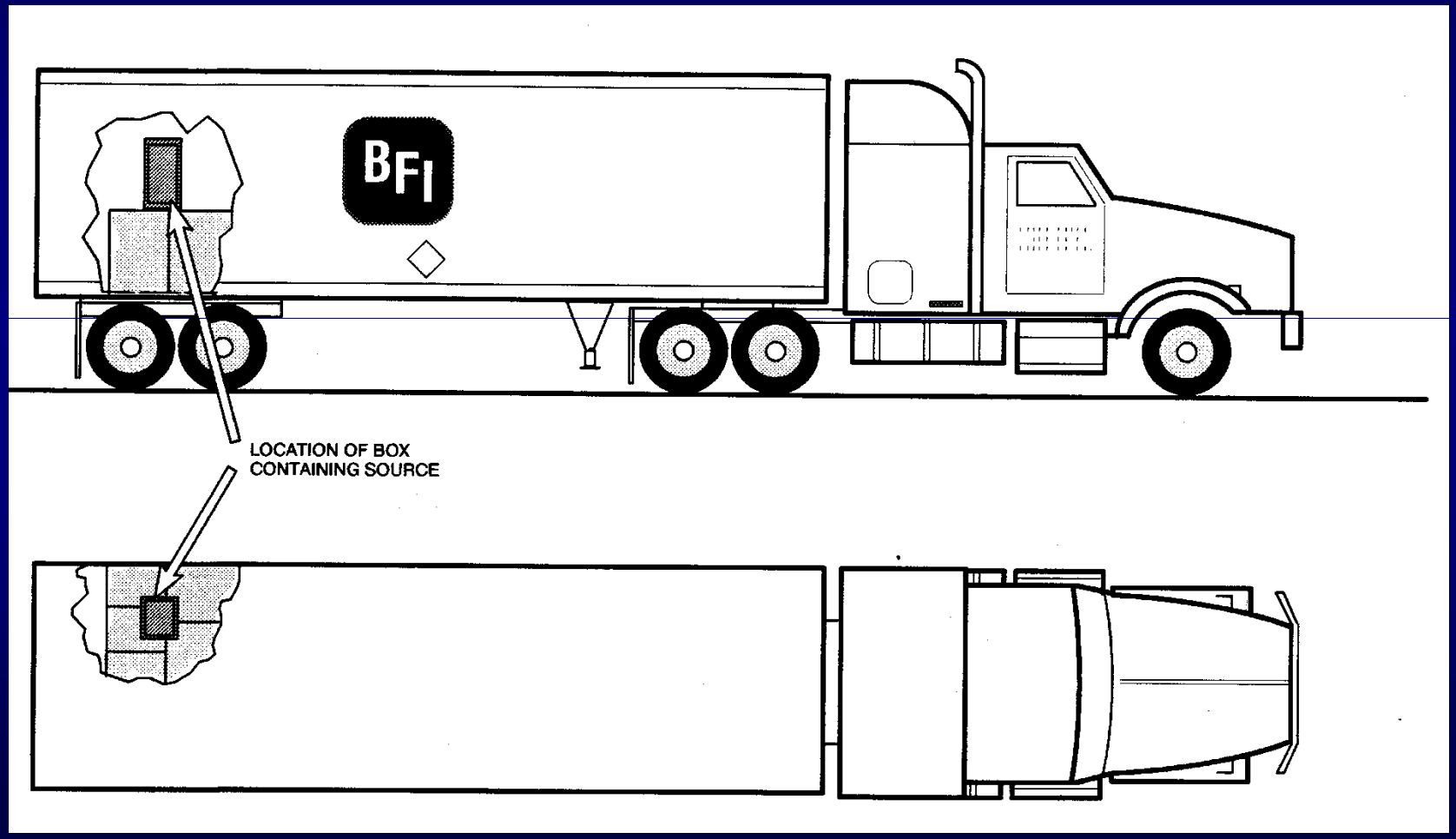

Route of Travel

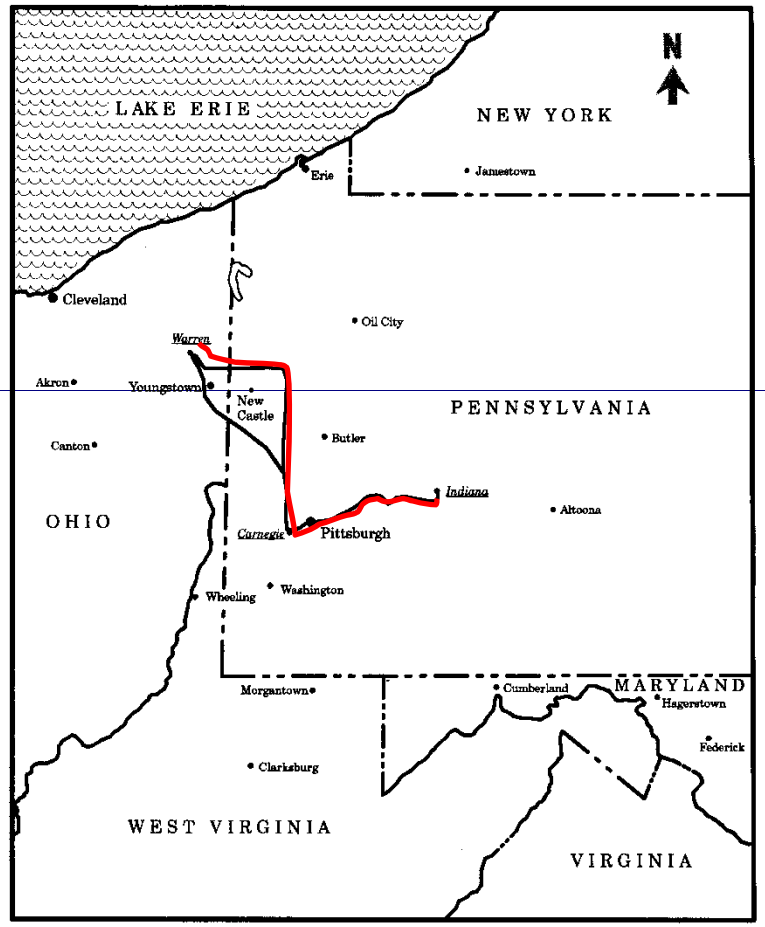

Figure 2.12 Route of Browning – Ferris Industries Semitruck 808 on November 25, 1992

Source Detected at Site

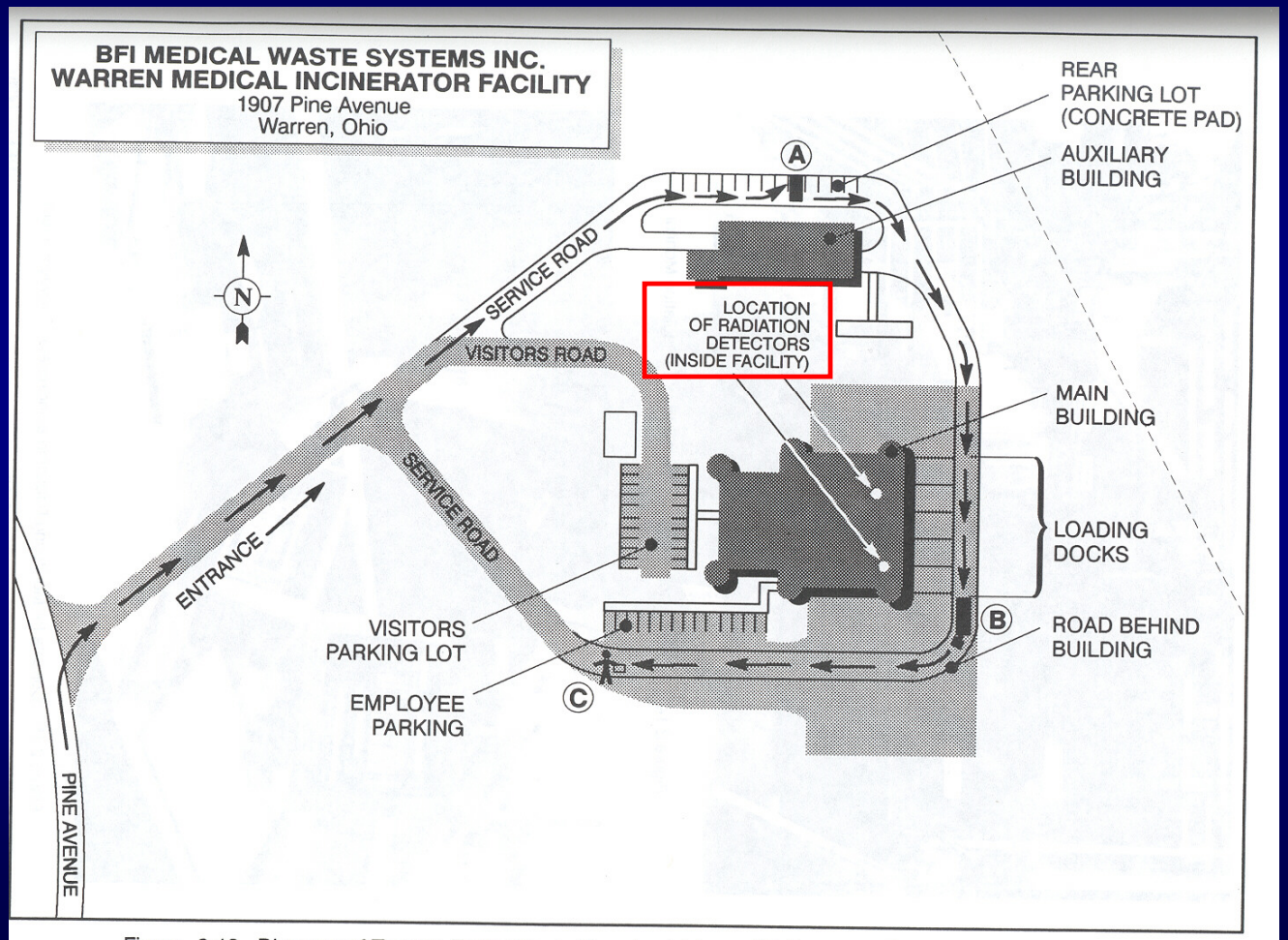

Figure 2.13 Diagram of Tractor–Trailer Route Carrying Iridium–192 Source at BFI–Warren on November 25, 1992

Route of Travel

Sent Back

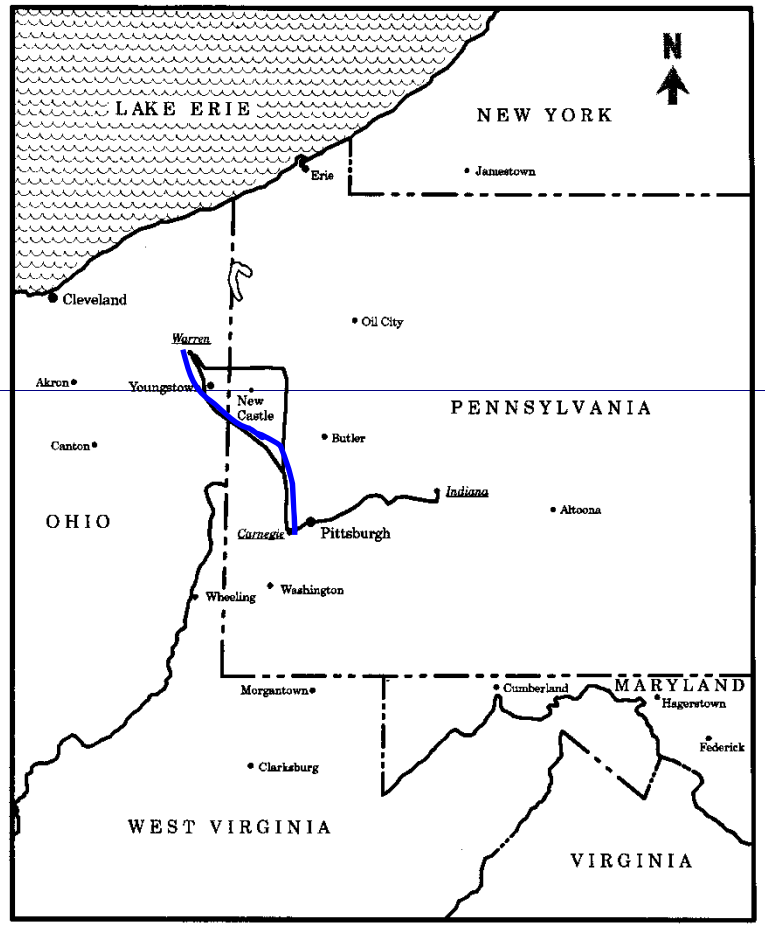

Figure 2.12 Route of Browning – Ferris Industries Semitruck 808 on November 25, 1992

Source Isolated

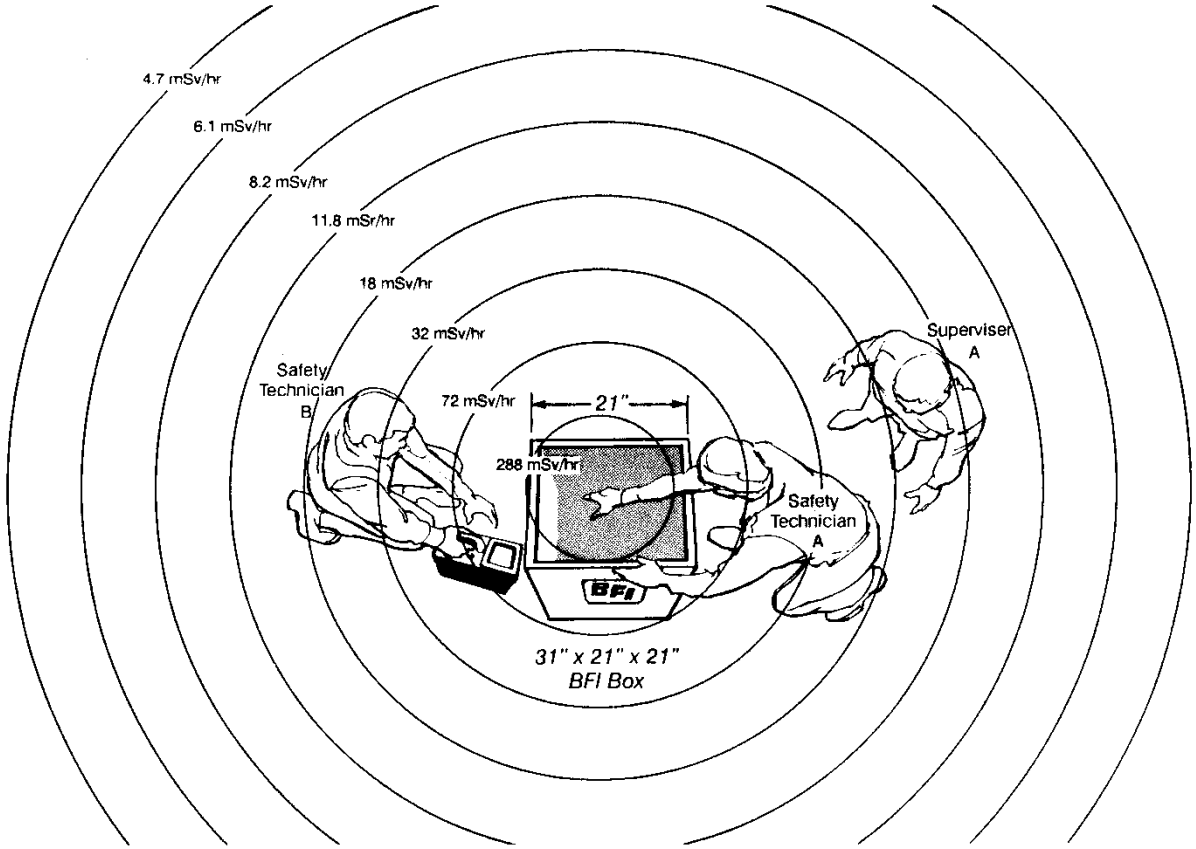

Figure 6.8 Aerial View of the Positions of Supervisor A, Safety Technician A, and Safety Technician B Around the Box Containing the Iridium-192 Source on December 1, 1992, Showing Isodose Curves in mSv per Hour

Human Tragedy

Death spurs review of radiation

By Robert Davis
USA TODAY

Even at 82, Sara Mildred Colgan was a feisty woman who used all her strength to battle rectal cancer with aggressive nuclear medicine.

But when doctors mistakenly left a tiny piece of radioactive wire in her body, a medical nightmare was unleashed.

Before Colgan died five days later, Nov. 21, the radiation that burned her internal organs had exposed 94 medical workers, friends and others.

"That was one of the most severe accidents in the history of use of (medical) radiation in the United States," says Daniel Flynn, a Harvard Medical School radiation oncologist who investigated her death for the U.S. Nuclear Regulatory Commission.

An NRC report Monday on Colgan's death criticized everything from a poorly trained staff treating Colgan to faulty equipment and weak regulation of its use.

In a sweeping move, the NRC said it will conduct an internal review of its regulation of radiation treatment — used by about 600,000 cancer patients each year.

The NRC has suspended the license of the company that provided the radiation machine for Colgan.

"Our regulation of this area needs to be improved," says the NRC's Sue Gagner.

Radiation is routinely used to safely destroy cancer cells. The extent to which cancer patients have died because of radiation overdoses or medical mistakes is debatable.

The NRC says it knows of five deaths from accidental overdoses in U.S. medical facilities. But Gagner doesn't dispute a Cleveland *Plain Dealer* newspaper report of 40 deaths.

Flynn says Colgan, of Indiana, Pa., died because of bad care that "defied common sense and logic. . . . Different types of regulations would have prevented the accident."

Sydney Wolfe, of Public Citizen Health Research Group, questions whether the NRC can regulate: "It's been more of a promotion agency for the nuclear industry than a regulatory agency. It's fallen asleep on the job."

James Bauer, an oncologist at the Indiana Regional Cancer Center, surgically implanted five tiny catheters into Colgan's tumor. On Nov. 16, he inserted a wire with a hair-sized radiation source into each catheter.

The (Cleveland) Plain Dealer

COLGAN: Plays piano months before she died after radioactive wire was left in her.

The radiation treatment, called brachytherapy, is delivered to the tumor without damaging area tissue. But the wire holding the tiny radioactive source broke inside one of the catheters.

The NRC report says Bauer and his staff ignored warning lights from a machine monitoring radiation, and sent Colgan back to her nursing home.

The probe remained inside her body for four days before it fell out and was found in her bed. The nursing home staff unknowingly threw it out with other medical waste.

Radiation monitors at an incinerator detected trouble in the load of medical waste.

By then, Colgan was dead.

"She was dead and buried before any of this ever came to light," says Indiana, Pa., coroner Thomas Streams, who exhumed the body for autopsy.

A criminal probe of Colgan's death is under way. Bauer says Colgan did not die from radiation sickness. "She died from many different diseases. It was an unfortunate tragedy," he says.

The NRC says none of 94 people "exposed to significant radiation levels" — including ambulance medics, nurses and friends — have suffered from radiation sickness. But the agency acknowledges they are at an increased risk of developing cancer.

The NRC estimates that only 1 in 3,000 getting radiation treatment are given overdoses.

"We want to reduce that number, but it will never be perfect," says Gagner, adding the patients who are treated with radiation are already "very, very sick."

Internal Dose

NUREG–1535

Ingestion of Phosphorus-32 at Massachusetts Institute of Technology, Cambridge, Massachusetts, Identified on August 19, 1995

U.S. Nuclear Regulatory Commission

General Information or Other	Event Number: 43183
Rep Org: OK DEQ RAD MANAGEMENT Licensee: IPS Region: 4 City: OKLAHOMA CITY State: OK County: License #: 310-0901 Agreement: Y Docket: NRC Notified By: MIKE BRODERICK HQ OPS Officer: BILL GOTT	Notification Date: 02/23/2007 Notification Time: 20:43 [ET] Event Date: 02/22/2005 Event Time: 06:00 [CST] Last Update Date: 03/01/2007
Emergency Class: NON EMERGENCY 10 CFR Section: AGREEMENT STATE	Person (Organization): WILLIAM JONES (R4) JOSEPH HOLONICH (FSME) THOMAS BLOUNT (IRD) CHUCK CAIN (R4) BRUCE MALLET (R4) LEN WERT (R4) CHARLES MILLER (FSME) MARTIN VIRGILIO (DEDO) MELVYN LEACH (NSIR) ROY ZIMMERMAN (NSIR)

Event Text

AGREEMENT STATE REPORT - MISPLACED SOURCE CAUSES POSSIBLE OVEREXPOSURE

At approximately 0600 on 2/22/07 while loading a well logging source (Gulf Nuclear CSV H90 1 Curie Cs-137 source) into the pig on the truck, the crew unknowingly dropped the source in the motor pool parking lot. The source was picked up by a mechanic at approximately 0900 and he put it in the pocket of his jacket. He did not realize that it was radioactive, but thought it might be a part to something. The mechanic wore the jacket for about 4 hours. He visited several businesses including a sandwich shop. He hung the jacket in the break room where it remained for the remainder of the day and over night. On 02/23/07, the mechanic put the jacket back on. The well logging crew returned to the facility at approximately 0600 and discovered that the source was missing when they unpacked their equipment. The crew did not discover the missing source earlier because they did not need to use the source on a job site. The crew immediately started a search for the source. The mechanic produced the source when he heard that it was missing. In total the mechanic wore the jacket about 5.5 hours over the 24 hour period. This is an estimate based on an interview with the mechanic who was uncertain about the exactness of his recollection for the time he wore the jacket.

END OF DOSE RECONSTRUCTION

END OF CHAPTER 17