Reactor Building Service Water System

Chapter 11.2

Objectives

1. Identify the purposes of the reactor building service water (RBSW) system.
2. Summarize the following RBSW flowpaths:
   a. Normal operation
   b. Loss of coolant accident (LOCA) conditions
3. Summarize the system's response to the following:
   a. Loss of coolant accident (LOCA)
   b. Loss of preferred power
   c. Loss of service and instrument air (SIA)

Objectives

4. Explain the interrelationship between the RBSW system and the following:
   a. Emergency AC Power System
   b. Service and Instrument Air (SIA) system
   c. Circulating Water System
   d. Reactor Building Closed Loop Cooling Water (RBCLCW) system
   e. Turbine Building Closed Loop Cooling Water (TBCLCW) system
   f. Residual Heat Removal (RHR) System

Purpose

The purposes of the reactor building service water (RBSW) system are to:

- transfer heat from the reactor building components to the Long Island Sound
- provide an emergency source of cooling water to the reactor vessel and spent fuel pool.

The RBSW system normally provides cooling water to:

- EDGs
- RBCLCW heat exchangers and booster heat exchangers
- RHR heat exchangers
- RBNVS coolers and chiller condensers
- RBSVS coolers and chiller condensers
- CRAC chiller condensers

Under abnormal or emergency conditions the RBSW system can provide cooling water to the:

- Reactor pressure vessel via connection to the RHR system
- Spent fuel pool via the spent fuel pool and cooling system
- Fire protection system
- Turbine building closed loop cooling water (TBCLCW) system

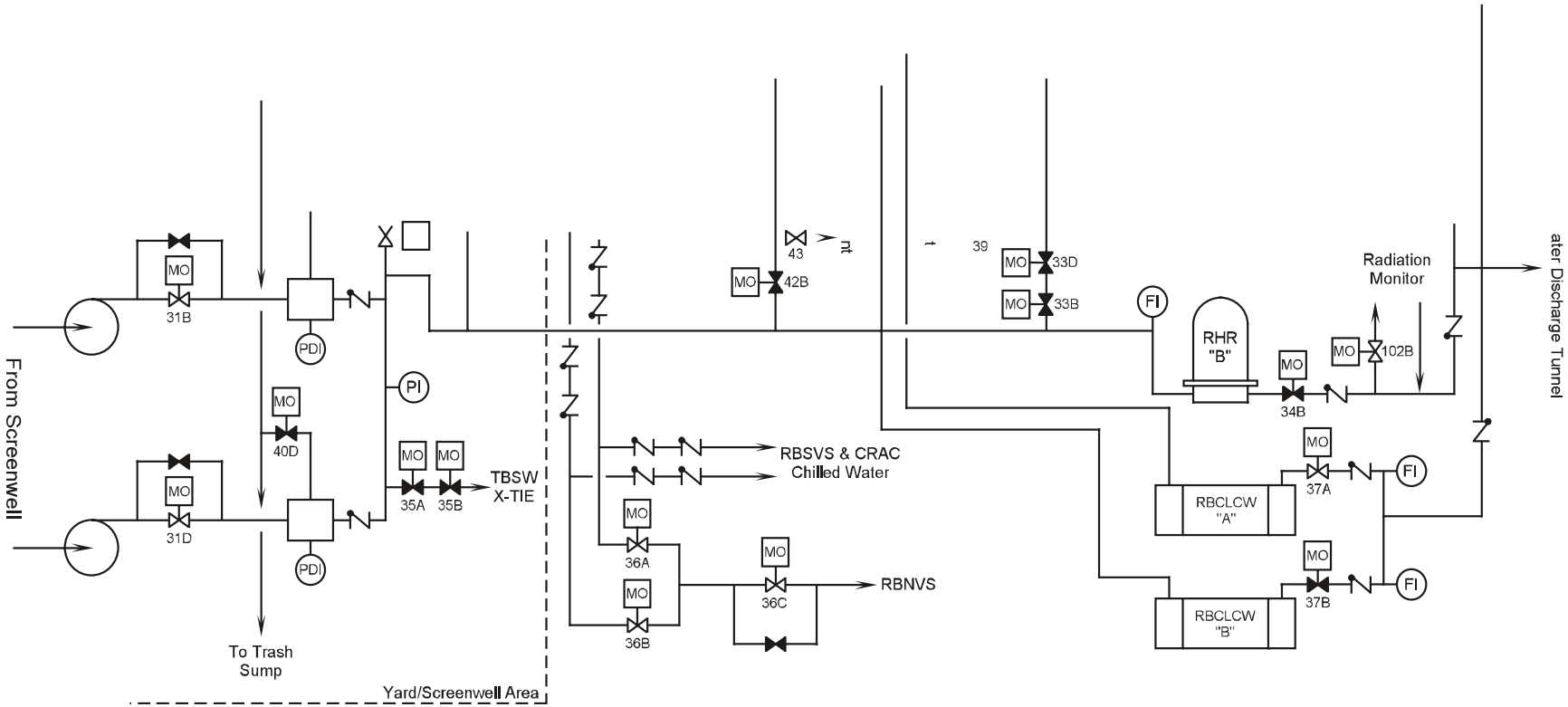
From Screenwell
MO
31B
MO
31D
PDI
PDI
MO
40D
To Trash
Sump
PI
MO
35A
MO
35B
TBSW
X-TIE
Yard/Screenwell Area
MO
36A
MO
36B
MO
36C
RBNVS
RBSVS & CRAC
Chilled Water
MO
42B
43
39
MO
33D
MO
33B
FI
RHR
"B"
MO
34B
MO
102B
Radiation
Monitor
RBCLCW
"A"
MO
37A
FI
RBCLCW
"B"
MO
37B
FI
ater Discharge Tunnel

Reactor Building Service Water Loop "A"
•RHR A heat exchanger •RBCLCW A heat exchanger •RBCLCW A booster heater exchanger •Emergency diesel engine A, B, and C coolers •RBSVS and CRAC chilled water system A •RBNVS chilled water system •Emergency water supply to the reactor vessel •Emergency water supply to the spent fuel pool
Reactor Building Service Water Loop "B"
•RHR B heat exchanger •RBCLCW B heat exchanger •RBCLCW B booster heater exchanger •Emergency diesel engine A, B, and C coolers •RBSVS and CRAC chilled water system B •RBNVS chilled water system •Emergency water supply to the reactor vessel •Emergency water supply to the spent fuel pool •RBSW/TBSW cross connect.

Loss of Preferred Power

- RBSW Pump “A” – EDG 101 Bus
- RBSW Pump “B” – EDG 102 Bus
- Either RBSW “C” ***or*** “D” – EDG 103 Bus

- RBSW Pump “C/D” Switch

RBSW Restoration Sequence

1. Discharge Valves Close (still 25^0 open)
2. Pump Restarts
   - 7 seconds ***if*** no LOCA
   - 12 seconds ***if*** LOCA
3. Discharge Valves Open
4. Operator lines up:
   - RBCLCW booster Hx
   - RHR Hx

LOCA Isolations

The following are isolated from RBSW

- TBSW
- RBNVS
- RBCLCW Booster Hx’s
- RHR Hx’s

LOCA Actions

The following automatically occur:

- Service water is admitted to both RBCLCW heat exchangers
- RBSW splits into two redundant loops
- RBSW pumps restart

Loss of SIA

- EDG cooling outlet valves open
- If they remain open, an additional RBSW pump may be required

System Interfaces

- 4160V Emergency Distribution System
- SIA
- Circulating Water System
- RBCLCW
- TBSW
- RHR
- RBNVS
- RBSVS
- Fuel Pool Cooling and Cleanup System Radiation Monitoring

Review

The purposes of the reactor building service water (RBSW) system are to:

- transfer heat from the reactor building components to the Long Island Sound
- provide an emergency source of cooling water to the reactor vessel and spent fuel pool.

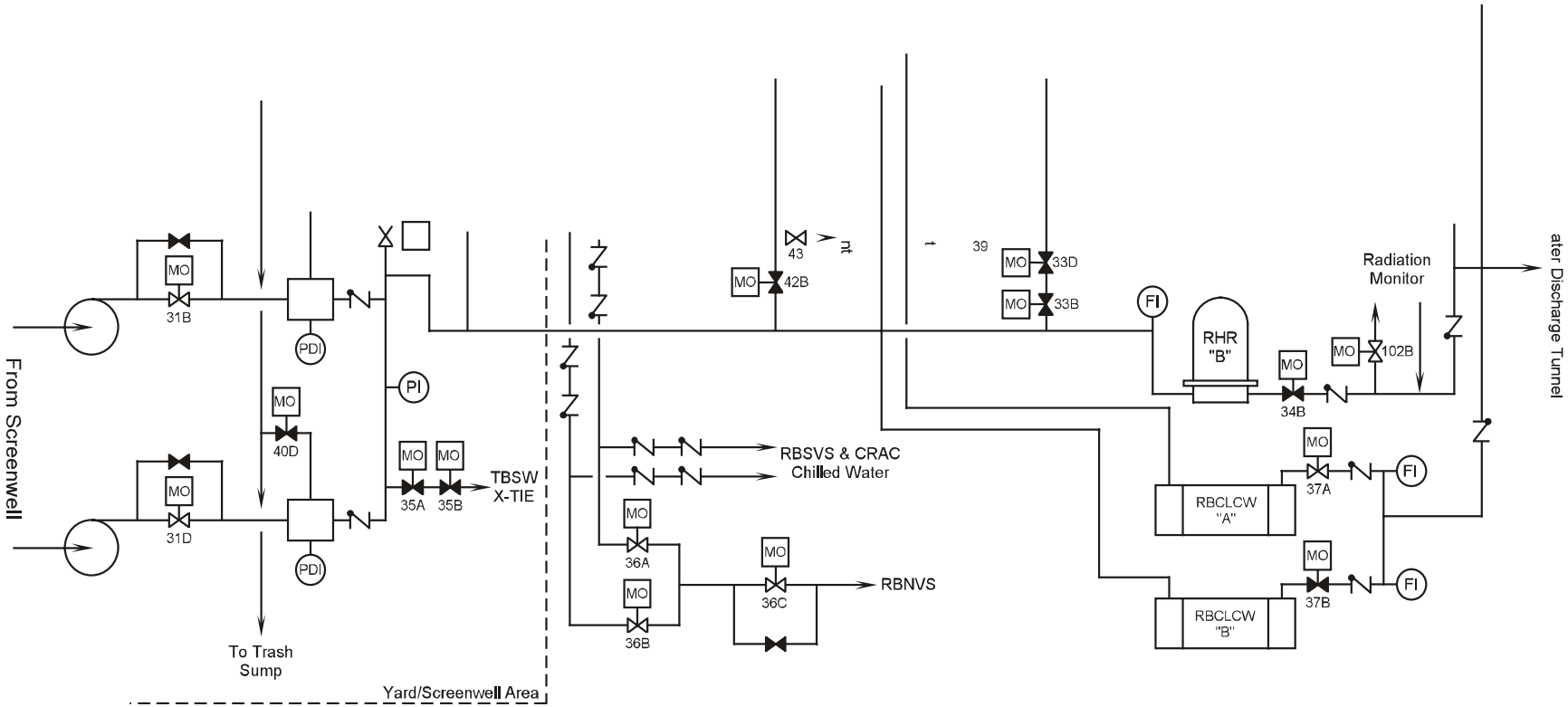
From Screenwell
MO
31B
MO
31D
PDI
PDI
MO
40D
To Trash
Sump
PI
MO
35A
MO
35B
TBSW
X-TIE
Yard/Screenwell Area
MO
36A
MO
36B
MO
36C
RBNVS
RBSVS & CRAC
Chilled Water
MO
42B
43
39
MO
33D
MO
33B
FI
RHR
"B"
MO
34B
MO
102B
Radiation
Monitor
RBCLCW
"A"
MO
37A
FI
RBCLCW
"B"
MO
37B
FI
ater Discharge Tunnel

Objectives

- Identify the purposes of the reactor building service water (RBSW) system.
- Summarize the following RBSW flowpaths:
  - Normal operation
  - Loss of coolant accident (LOCA) conditions
- Summarize the system's response to the following:
  - Loss of coolant accident (LOCA)
  - Loss of preferred power
  - Loss of service and instrument air (SIA)
- Explain the interrelationship between the RBSW system and the following:
  - Emergency AC Power System
  - Service and Instrument Air (SIA) system
  - Circulating Water System

Are there any questions?