High Pressure Coolant Injection

Chapter 10.1

Objectives

1. Identify the purposes of the High Pressure Coolant Injection system.
2. Recognize the purpose, function and operation of the following High Pressure Coolant Injection system major components:
   a. Steam Supply Isolation Valves (Inboard, Outboard)
   b. Steam Supply Warming Isolation Valves (Inboard, Outboard
   c. Steam Inlet To Turbine Valve
   d. Turbine Stop Valve
   e. Turbine Governor Valve
   f. Turbine
   g. Auxiliary Oil Pump
   h. Main and Booster Pump
   i. Flow Controller
   j. Suppression Pool Suction Valve
   k. Condensate Storage Tank Suction Valve
   l. Pump Discharge Valves
   m. Test Bypass to CST Valves
   n. Line Fill Pump

Objectives

3. Describe the following flowpaths of the HPCI system:
   a. Steam Supply and Exhaust
   b. Injection Flow
   c. Test Flow
   d. Line Fill
4. List the HPCI system setpoints which affect the following:
   a. Automatic Initiation
   b. Automatic Isolation
   c. Automatic Turbine Trip
   d. Suction Path Transfer

Objectives

5. Describe how the HPCI system interrelates with the following system/components:
   a. Automatic Depressurization System
   b. Condensate Storage Tank
   c. Condensate and Feedwater System
   d. Emergency AC and DC Power Systems
   e. Main Steam System
   f. Nuclear Steam Supply Shutoff System
   g. Reactor Building Standby Ventilation System
   h. Reactor Core Isolation Cooling System
   i. Suppression Pool

HPCI System Purposes

- Maintain adequate reactor vessel inventory
  - For core cooling
  - On small break LOCAs
- Depressurize the reactor vessel
  - To allow low pressure ECCSs to inject
  - On intermediate break LOCAs
- Backup RCIC when reactor vessel isolated

HPCI System
Major Components

- Steam Supply Isolation Valves (Inboard, Outboard)
- Steam Supply Warming Isolation Valves (Inboard, Outboard
- Steam Inlet To Turbine Valve
- Turbine Stop Valve
- Turbine Governor Valve
- Turbine
- Auxiliary Oil Pump
- Main and Booster Pump
- Flow Controller
- Suppression Pool Suction Valve
- Condensate Storage Tank Suction Valve
- Pump Discharge Valves
- Test Bypass to CST Valves
- Line Fill Pump

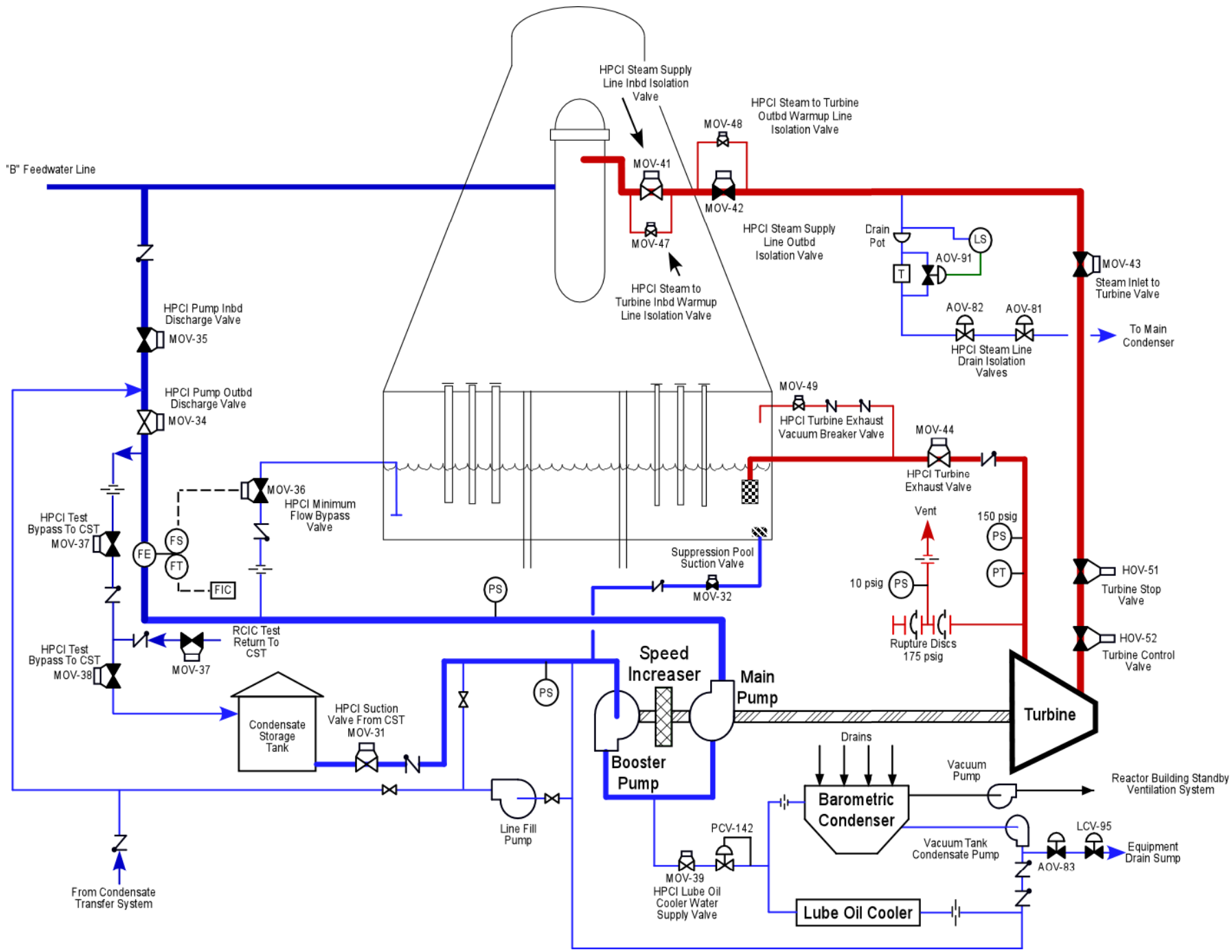
HPCI Steam Supply Line Inbd Isolation Valve
HPCI Steam to Turbine Outbd Warmup Line Isolation Valve
MOV-48
MOV-41
MOV-42
"B" Feedwater Line
MOV-47
HPCI Steam Supply Line Outbd Isolation Valve
Drain Pot
LS
AOV-91
T
MOV-43
Steam Inlet to Turbine Valve
HPCI Steam to Turbine Inbd Warmup Line Isolation Valve
AOV-82
AOV-81
To Main Condenser
HPCI Steam Line Drain Isolation Valves
HPCI Pump Inbd Discharge Valve
MOV-35
HPCI Pump Outbd Discharge Valve
MOV-34
MOV-49
HPCI Turbine Exhaust Vacuum Breaker Valve
MOV-44
HPCI Turbine Exhaust Valve
MOV-36
HPCI Minimum Flow Bypass Valve
HPCI Test Bypass To CST
MOV-37
FE
FS
FT
FIC
Vent
150 psig
PS
PT
Suppression Pool Suction Valve
10 psig
PS
MOV-32
HOV-51
Turbine Stop Valve
Rupture Discs 175 psig
HOV-52
Turbine Control Valve
RCIC Test Return To CST
HPCI Test Bypass To CST
MOV-38
MOV-37
Speed Increaser
Main Pump
Turbine
Condensate Storage Tank
HPCI Suction Valve From CST MOV-31
PS
Drains
Booster Pump
Vacuum Pump
Reactor Building Standby Ventilation System
Barometric Condenser
Line Fill Pump
PCV-142
LCV-95
Vacuum Tank Condensate Pump
Equipment Drain Sump
AOV-83
MOV-39
HPCI Lube Oil Cooler Water Supply Valve
Lube Oil Cooler
From Condensate Transfer System

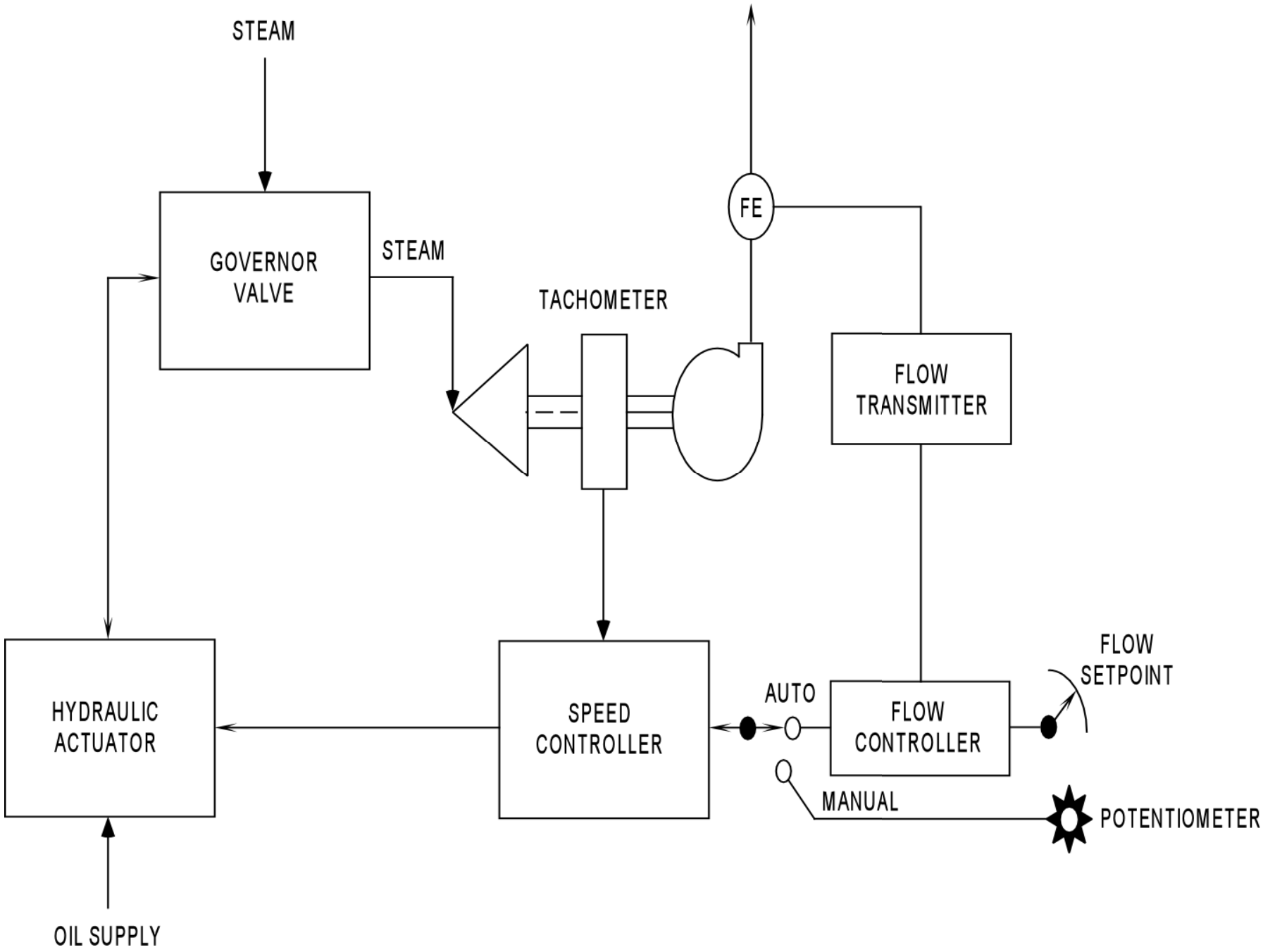
STEAM
GOVERNOR VALVE
STEAM
TACHOMETER
FE
FLOW TRANSMITTER
HYDRAULIC ACTUATOR
SPEED CONTROLLER
AUTO
FLOW CONTROLLER
FLOW SETPOINT
MANUAL
POTENTIOMETER
OIL SUPPLY

HPCI Flow Paths

- Steam Supply and Exhaust
- Injection Flow
- Test Flow
- Line Fill

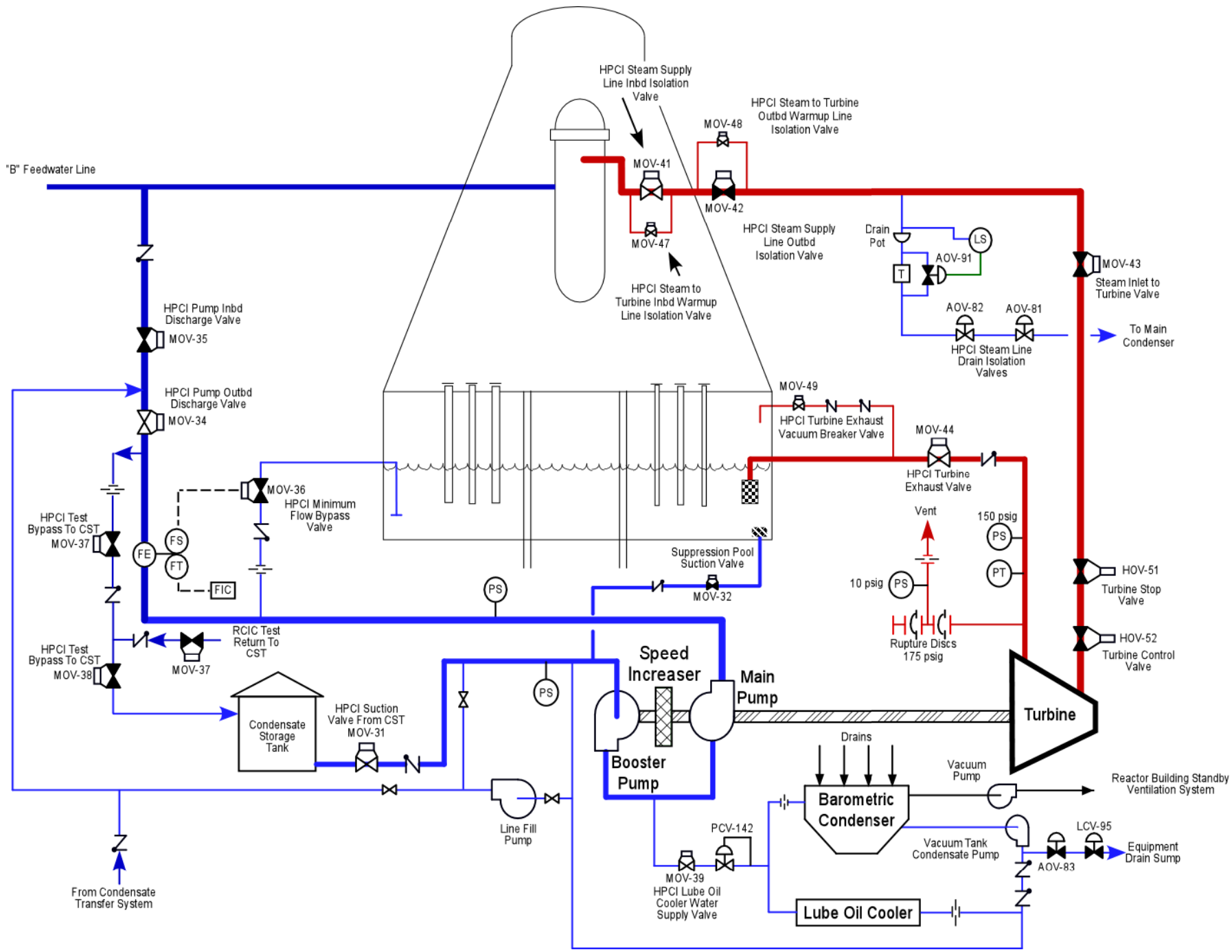
HPCI Steam Supply Line Inbd Isolation Valve
HPCI Steam to Turbine Outbd Warmup Line Isolation Valve
MOV-48
MOV-41
MOV-42
"B" Feedwater Line
MOV-47
HPCI Steam Supply Line Outbd Isolation Valve
Drain Pot
LS
AOV-91
T
MOV-43
Steam Inlet to Turbine Valve
HPCI Steam to Turbine Inbd Warmup Line Isolation Valve
AOV-82
AOV-81
To Main Condenser
HPCI Steam Line Drain Isolation Valves
HPCI Pump Inbd Discharge Valve
MOV-35
HPCI Pump Outbd Discharge Valve
MOV-34
MOV-49
HPCI Turbine Exhaust Vacuum Breaker Valve
MOV-44
HPCI Turbine Exhaust Valve
MOV-36
HPCI Minimum Flow Bypass Valve
HPCI Test Bypass To CST
MOV-37
FE
FS
FT
FIC
Vent
150 psig
PS
PT
Suppression Pool Suction Valve
10 psig
PS
MOV-32
HOV-51
Turbine Stop Valve
Rupture Discs 175 psig
HOV-52
Turbine Control Valve
RCIC Test Return To CST
HPCI Test Bypass To CST
MOV-38
MOV-37
Speed Increaser
Main Pump
Turbine
Condensate Storage Tank
HPCI Suction Valve From CST MOV-31
PS
Drains
Booster Pump
Vacuum Pump
Reactor Building Standby Ventilation System
Barometric Condenser
Line Fill Pump
PCV-142
LCV-95
Vacuum Tank Condensate Pump
Equipment Drain Sump
AOV-83
MOV-39
HPCI Lube Oil Cooler Water Supply Valve
Lube Oil Cooler
From Condensate Transfer System

HPCI System Setpoints

- Automatic Initiation
- Automatic Isolation
- Automatic Turbine Trip
- Suction Path Transfer

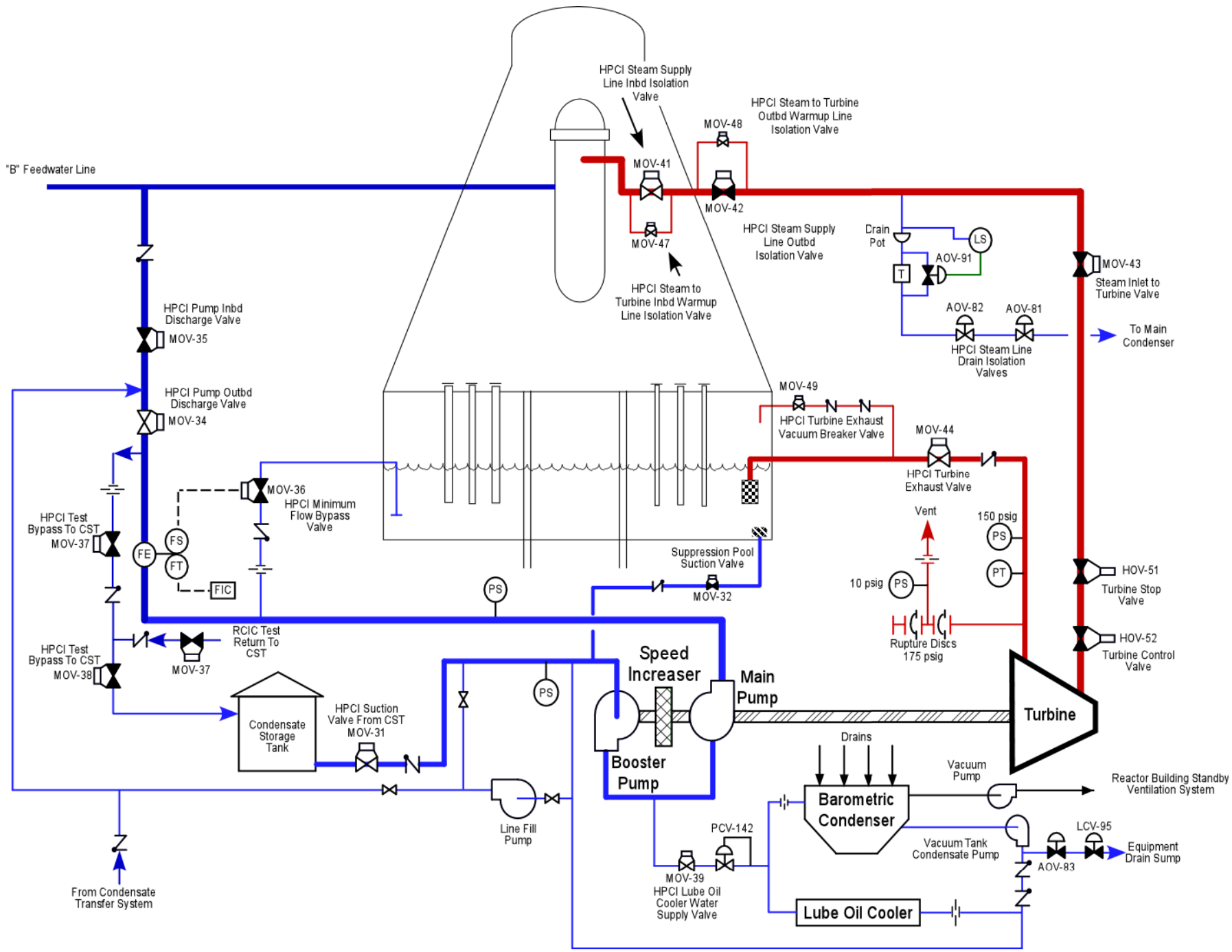
HPCI Steam Supply Line Inbd Isolation Valve
HPCI Steam to Turbine Outbd Warmup Line Isolation Valve
MOV-48
MOV-41
MOV-42
"B" Feedwater Line
MOV-47
HPCI Steam Supply Line Outbd Isolation Valve
Drain Pot
LS
AOV-91
T
MOV-43
Steam Inlet to Turbine Valve
HPCI Steam to Turbine Inbd Warmup Line Isolation Valve
AOV-82
AOV-81
To Main Condenser
HPCI Steam Line Drain Isolation Valves
HPCI Pump Inbd Discharge Valve
MOV-35
HPCI Pump Outbd Discharge Valve
MOV-34
MOV-49
HPCI Turbine Exhaust Vacuum Breaker Valve
MOV-44
HPCI Turbine Exhaust Valve
MOV-36
HPCI Minimum Flow Bypass Valve
HPCI Test Bypass To CST
MOV-37
FE
FS
FT
FIC
Vent
150 psig
PS
PT
Suppression Pool Suction Valve
10 psig
PS
MOV-32
HOV-51
Turbine Stop Valve
Rupture Discs 175 psig
HOV-52
Turbine Control Valve
RCIC Test Return To CST
HPCI Test Bypass To CST
MOV-38
MOV-37
Speed Increaser
Main Pump
Turbine
Condensate Storage Tank
HPCI Suction Valve From CST MOV-31
PS
Drains
Booster Pump
Vacuum Pump
Reactor Building Standby Ventilation System
Barometric Condenser
Line Fill Pump
PCV-142
LCV-95
Vacuum Tank Condensate Pump
Equipment Drain Sump
AOV-83
MOV-39
HPCI Lube Oil Cooler Water Supply Valve
Lube Oil Cooler
From Condensate Transfer System

HPCI Initiation

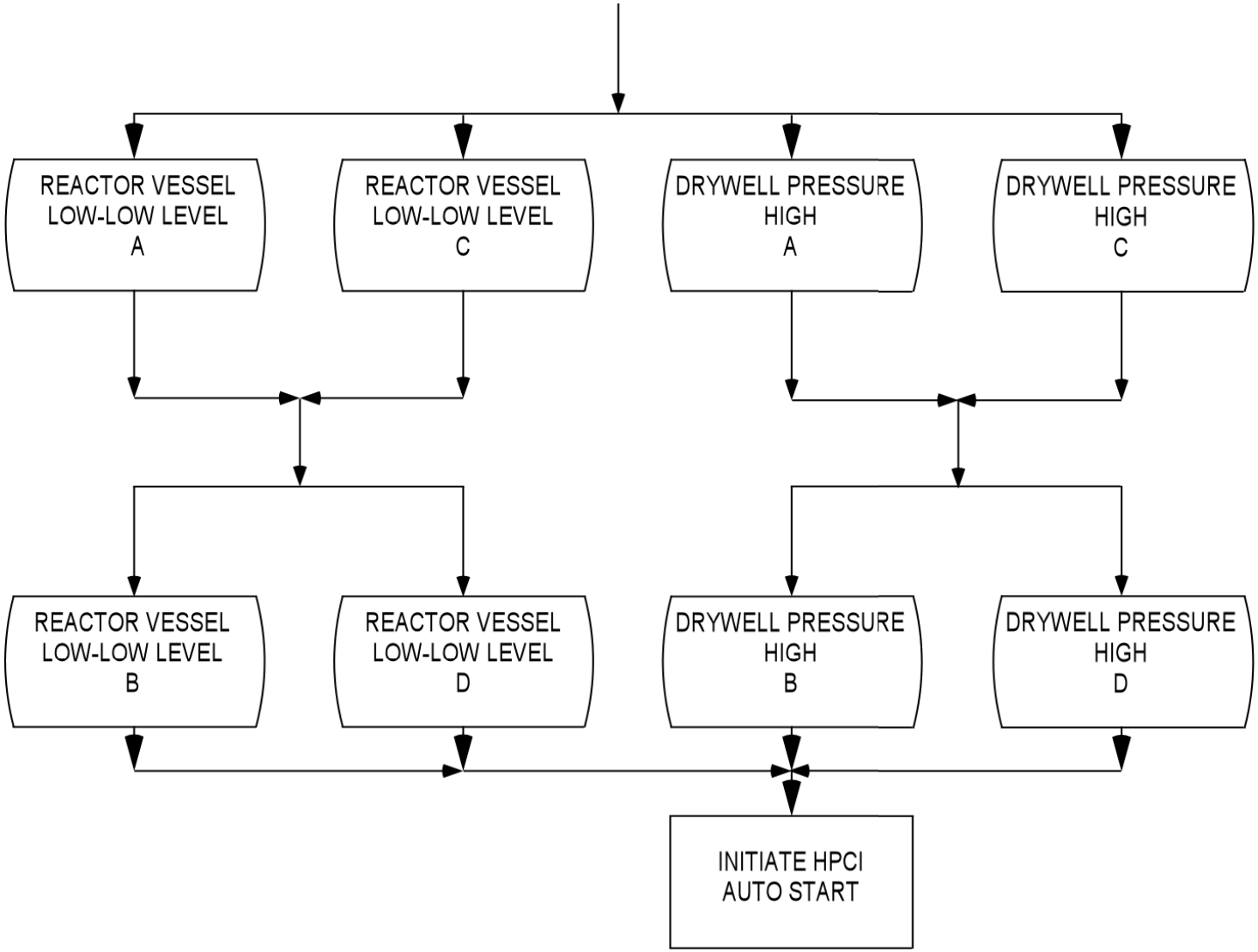

HPCI Isolation

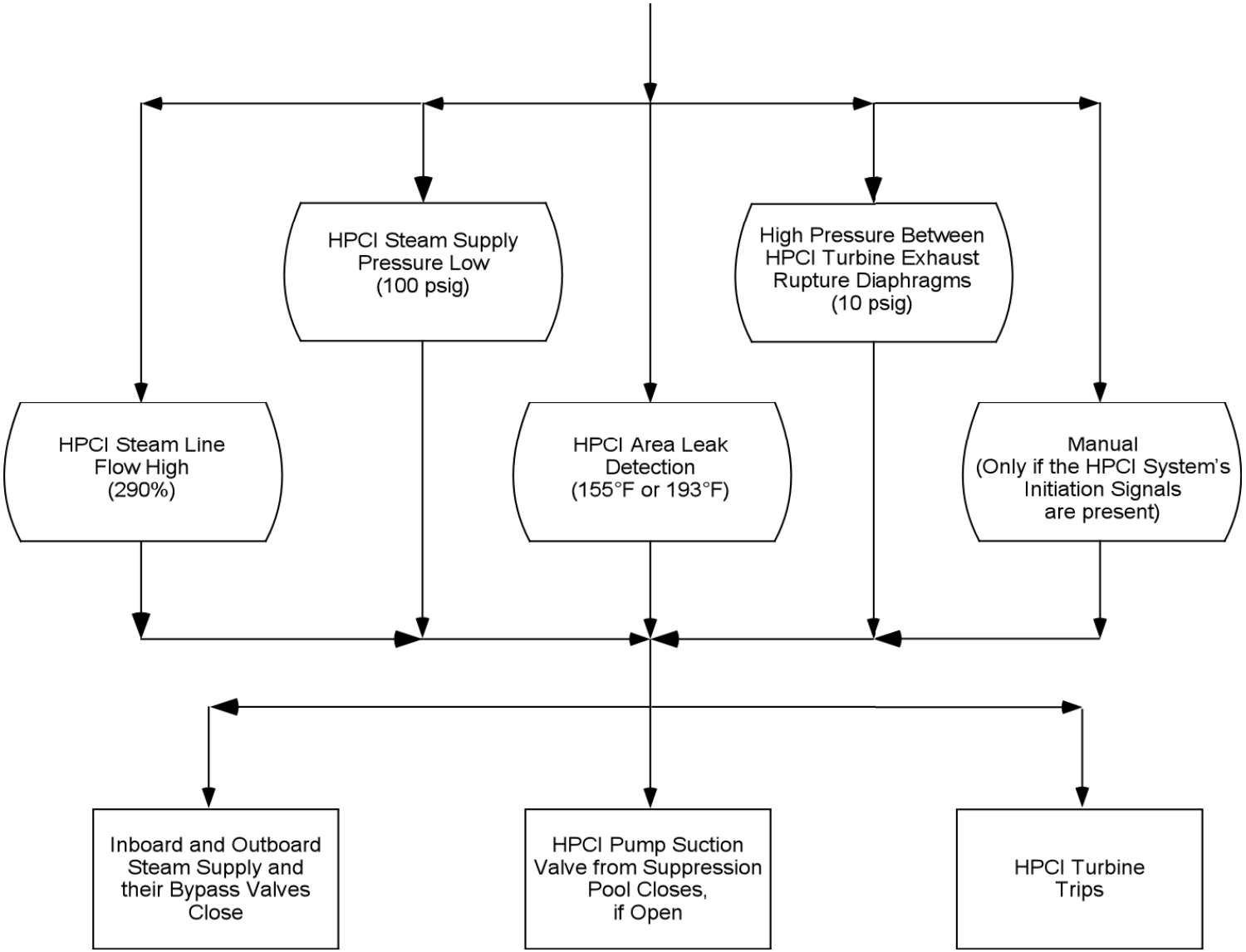

HPCI Turbine Trip

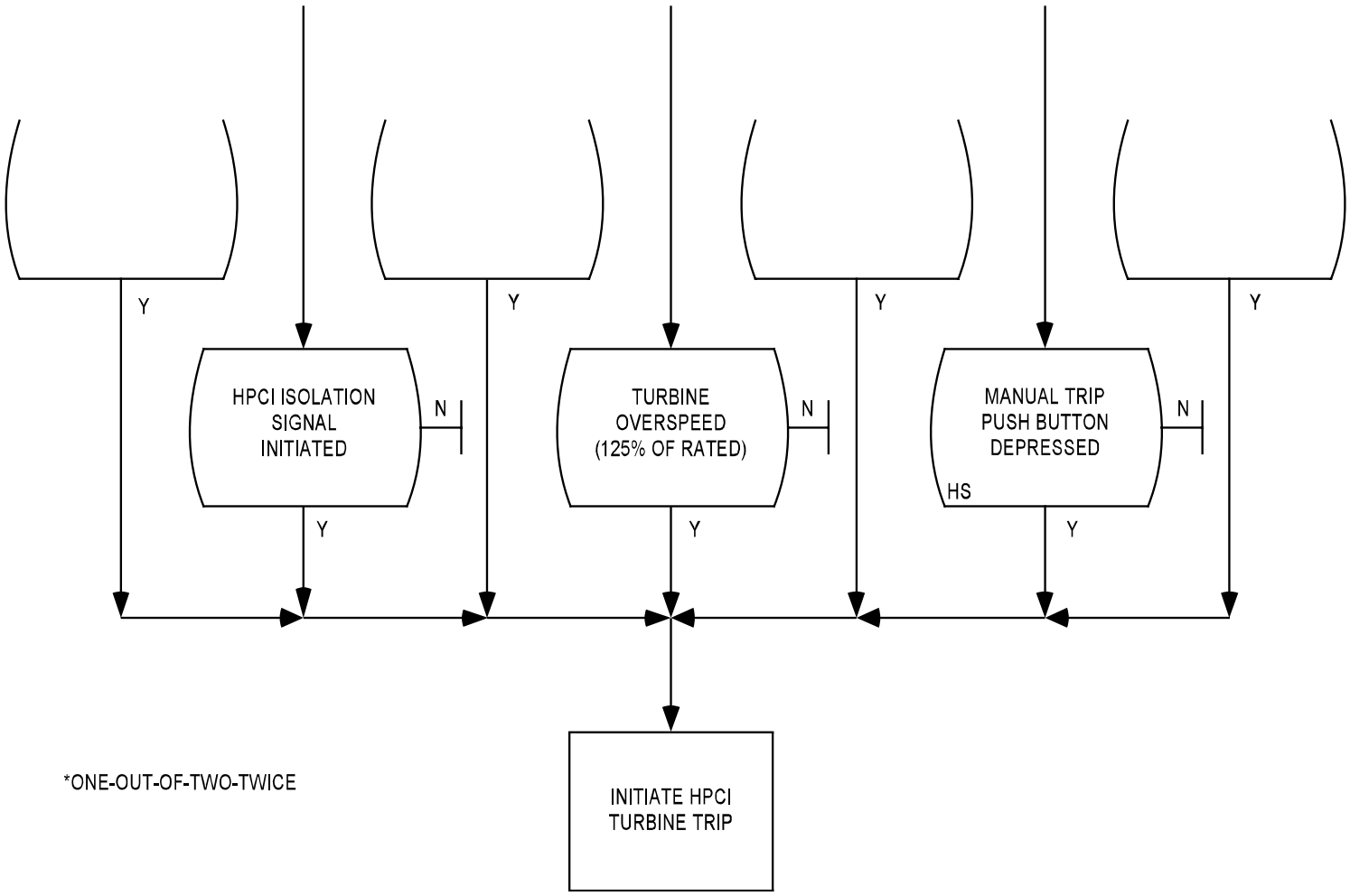

*ONE-OUT-OF-TWO-TWICE

System Interrelations

- Automatic Depressurization System
- Condensate Storage Tank
- Condensate and Feedwater System
- Emergency AC and DC Power Systems
- Main Steam System
- Nuclear Steam Supply Shutoff System
- Reactor Building Standby Ventilation System
- Reactor Core Isolation Cooling System
- Suppression Pool

Objective Review

1. Identify the purposes of the High Pressure Coolant Injection system.
2. Recognize the purpose, function and operation of the following High Pressure Coolant Injection system major components:

- Steam Supply Isolation Valves (Inboard, Outboard)
- Steam Supply Warming Isolation Valves (Inboard, Outboard
- Steam Inlet To Turbine Valve
- Turbine Stop Valve
- Turbine Governor Valve
- Turbine
- Auxiliary Oil Pump
- Main and Booster Pump
- Flow Controller
- Suppression Pool Suction Valve
- Condensate Storage Tank Suction Valve
- Pump Discharge Valves
- Test Bypass to CST Valves
- Line Fill Pump

Objective Review

3. Describe the following flowpaths of the HPCI system:
   - Steam Supply and Exhaust
   - Injection Flow
   - Test Flow
   - Line Fill
4. List the HPCI system setpoints which affect the following:
   - Automatic Initiation
   - Automatic Isolation
   - Automatic Turbine Trip
   - Suction Path Transfer

Objective Review

5. Describe how the HPCI system interrelates with the following system/components:
   - Automatic Depressurization System
   - Condensate Storage Tank
   - Condensate and Feedwater System
   - Emergency AC and DC Power Systems
   - Main Steam System
   - Nuclear Steam Supply Shutoff System
   - Reactor Building Standby Ventilation System
   - Reactor Core Isolation Cooling System
   - Suppression Pool

Questions

- or –

Comments