Power System

Chapters 9.1, 9.2, 9.3, and 9.4

Objectives:

1. Identify the purpose of the Normal AC Power system.

2. Recognize the purpose of the following Normal AC Power system major components:
   - Unit Generator and Auxiliaries
   - Generator Output breakers
   - Main Transformers (MT)
   - Normal Station Supply Transformer (NSST)
   - Reserve Station Supply Transformer (RSST)
   - Gas Turbine
   - 4160v Buses
   - 480v Distribution system
   - Generator Bus Duct Cooling System

Objectives (cont.):

3. Describe the distribution of power to the Normal buses from the:
   - Normal Station Supply Transformer (NSST)
   - Reserve Station Supply Transformer (RSST)
   - Gas Turbine

4. Describe how the Normal AC Power system interrelates with the following systems/components:
   - DC Power System (Section 9.4)
   - Emergency AC Power System (Section 9.1)

Purpose

- The purpose of the Normal AC Power system is to provide adequate power to unit auxiliary loads for normal operation of the plant.
  - Two physically independent off site power supplies are provided to safety related loads supplied from the emergency buses.

Components

- The purpose of the unit generator is to transfer the mechanical energy from the main turbine into electrical energy.
  - The rotating shaft of the main turbine is coupled to the unit generator's rotor.
  - The rotor supplies the rotating magnetic field necessary to produce electricity from the generator.

Components

- Two parallel main generator output breakers.
  - Breakers are installed between the main turbine and the grid.
    - Generator on line - the main transformer provides power to the grid and normal AC power system via the NSST
    - Generator off line - Off site power from the grid is provided to the normal AC power system via the NSST.

- Two Main Transformers
  - Each transformer has 3 single phase windings
  - Step up transformers 24KV (UG) to 138KV (Grid)

- Generator bus duct cooling
  - Supplies cooling for the generator bus bars to the main transformer.
  - Cooled by TBCLC system
  - Max 45% load if O.O.S.

Components

- Normal Station Service Transformer (NSST)
  - **Step-down (138KV/4160V) three phase transformer.**
  - **The NSST supplies:**
    - **preferred power to 4160V normal AC buses 1A and 11**
    - **preferred power to 4160V emergency AC buses 101, 102, and 103**
    - **backup power to the 4160V normal AC buses 1B and 12**

- Reserve Station Service Transformer (RSST)
  - **Step-down (69KV/4160V) three phase transformer**
  - **The RSST supplies:**
    - **preferred power to 4160V normal AC buses 1B and 12**
    - **back up power to 4160V emergency AC buses 101, 102, and 103**
    - **backup power to the 4160V normal AC buses 1A and 11**

- If the preferred power supply breakers from the NSST or RSST trip buses transfer to the backup power supply

Components

- Gas Turbine (third source of AC power)
  - **reserve power supply for the 69KV distribution network**
  - **aligned directly to the RSST**
  - **makes a station blackout a very low probability**

- 4160V AC buses
  - **AC buses supply loads to various large plant components**
    - **4 normal AC system buses (1A, 1B, 11, 12)**
    - **3 emergency AC buses (101, 102, 103)**

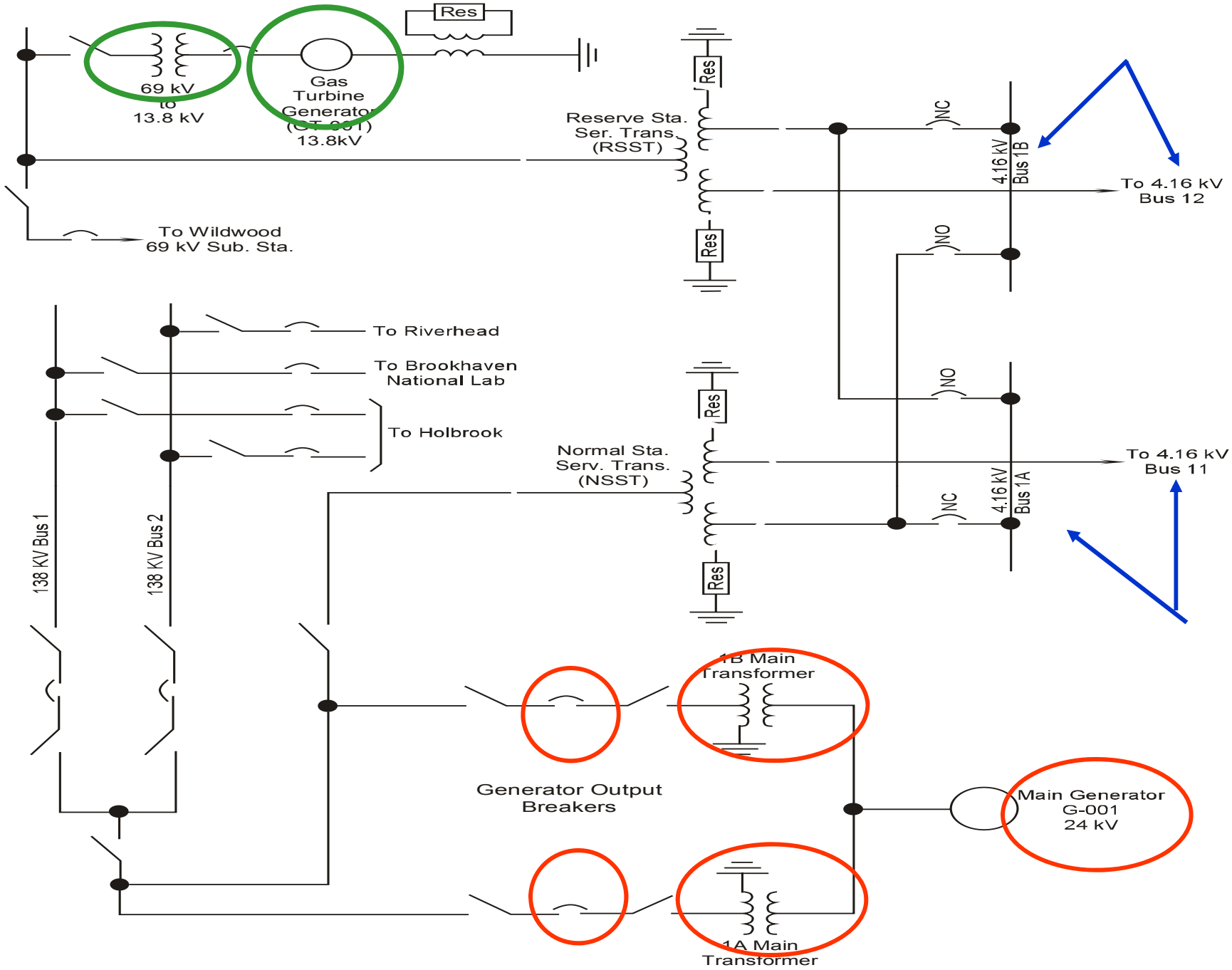
Res
69 kV
to
13.8 kV
Gas
Turbine
Generator
(GT-001)
13.8kV
Res
Reserve Sta.
Ser. Trans.
(RSST)
Res
NC
4.16 kV
Bus 1B
To 4.16 kV
Bus 12
To Wildwood
69 kV Sub. Sta.
NO
To Riverhead
To Brookhaven
National Lab
To Holbrook
Res
NO
Normal Sta.
Serv. Trans.
(NSST)
To 4.16 kV
Bus 11
NC
4.16 kV
Bus 1A
Res
138 KV Bus 1
138 KV Bus 2
1B Main
Transformer
Generator Output
Breakers
Main Generator
G-001
24 kV
1A Main
Transformer

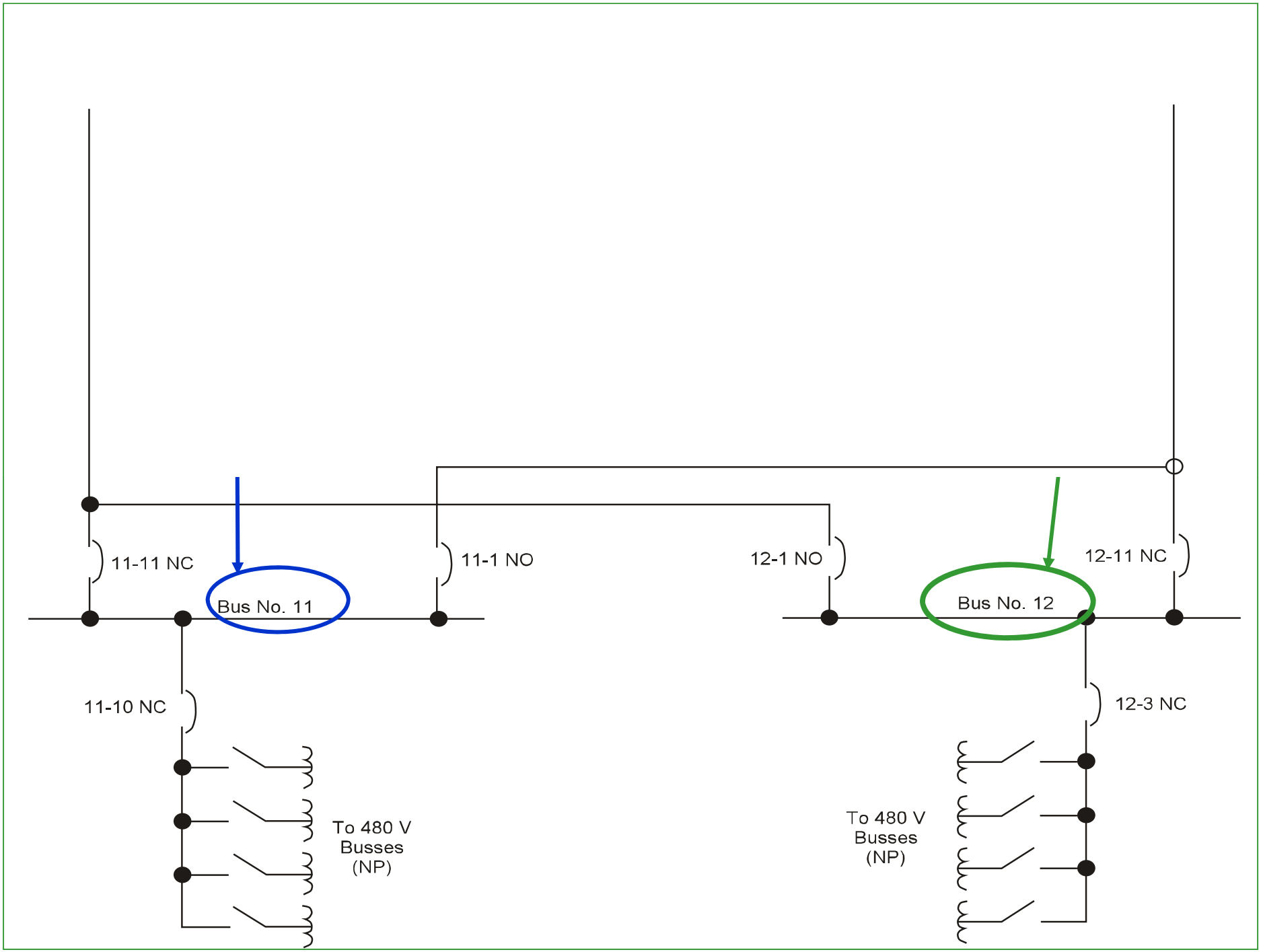
11-11 NC
Bus No. 11
11-1 NO
12-1 NO
12-11 NC
Bus No. 12
11-10 NC
12-3 NC
To 480 V
Busses
(NP)
To 480 V
Busses
(NP)

Bus 1A **"A" Reactor Recirculation MG Set Drive Motor** **"A" Circulating Water Pump** **"A" Condensate Booster Pump**
Bus 11 **"A" Turbine Building Service Water Pump** **"A" and "B" Screen Wash Pumps** **"A" Air Compressor** **"C" Circulating Water Pump** **4160/480 Transformers**
Bus 1B **"B" Reactor Recirculation MG Set** **"B" Circulating Water Pump** **"B" Condensate Booster Pump**
Bus 12 **Motor Driven Fire Pump** **"B" Condensate Pump** **"B" and "C" Air Compressors** **"D" Circulating Water Pump** **4160/480 Transformers**

Components

- The 480V normal AC power system consists of eight metal clad switchgear buses.
  - 480V system buses are fed by 4160V normal AC power system buses 11 and 12
  - The 480V motor control centers supply power to:
    - small motors
    - motor operated valves
    - 120V lighting distribution panels & power panels
    - battery chargers for the non safety 125V DC batteries

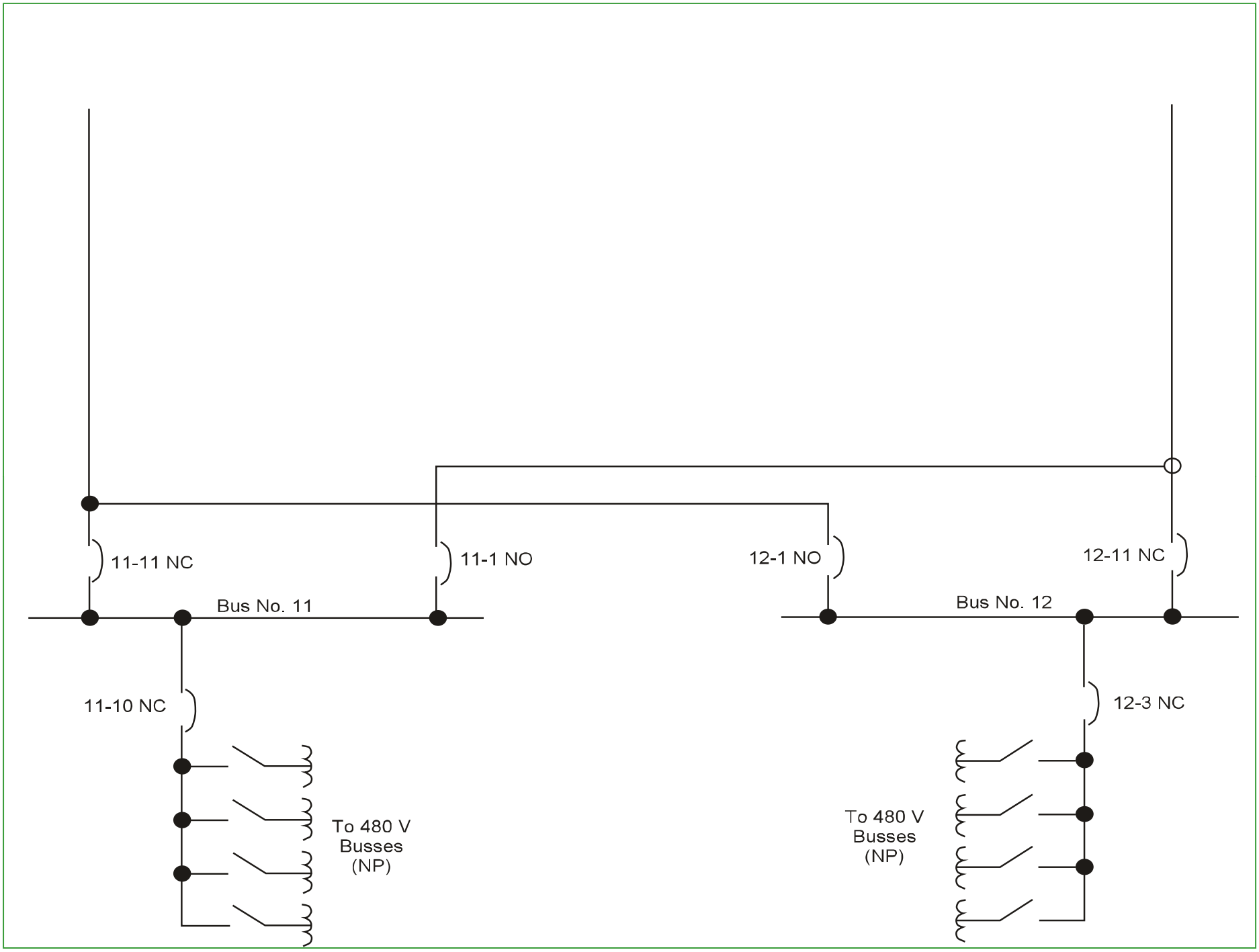
11-11 NC
11-1 NO
12-1 NO
12-11 NC
Bus No. 11
Bus No. 12
11-10 NC
12-3 NC
To 480 V
Busses
(NP)
To 480 V
Busses
(NP)

System Interfaces

- DC Power System (Section 9.4)
- The DC Power System supplies control power to the high and medium voltage AC switchgears and circuit breakers.

- Emergency AC Power System (Section 9.2)
- The Emergency AC Power System is normally energized by the normal AC power System.

OBJECTIVE REVIEW

1. Identify the purpose of the Normal AC Power system.

2. Recognize the purpose of the following Normal AC Power system major components:
   - Unit Generator and Auxiliaries
   - Generator Output breakers
   - Main Transformers (MT)
   - Normal Station Supply Transformer (NSST)
   - Reserve Station Supply Transformer (RSST)
   - Gas Turbine
   - 4160v Buses
   - 480v Distribution system
   - Generator Bus Duct Cooling System

OBJECTIVE REVIEW

3. Describe the distribution of power to the Normal buses from the:
   - Normal Station Supply Transformer (NSST)
   - Reserve Station Supply Transformer (RSST)
   - Gas Turbine

4. Describe how the Normal AC Power system interrelates with the following systems/components:
   - DC Power System (Section 9.4)
   - Emergency AC Power System (Section 9.1)