ENERGYSOLUTIONS

9 September 2011
EL&P-040-11

Mr. Pierre Saverot
Licensing Branch
Division of Spent Fuel Storage and Transportation
Office of Nuclear Material Safety and Safeguards
U.S. Nuclear Regulatory Commission
Washington, DC 20555

SUBJECT: Request for Revision of US Nuclear Regulatory Commission Certificate of Compliance No. 9204 for the Model 10-160B Shipping Cask

Dear Mr. Saverot:

Energy*Solutions* submits the attached addendum to the Model 10-160B Safety Analysis Report and requests the addition of the Source Insert containing up to10,000 Ci of Co-60 as authorized contents in the Model 10-160B package. The addendum to the Model 10-160B Safety Analysis Report demonstrates that the Co-60 when contained in the Source Insert may be transported in the 10-160B package in compliance with 10 CFR 71. The addendum provides discussion and evaluation of the portions of the SAR affected by the inclusion of the Source Insert and Co-60 as contents. Where an SAR chapter has no changes as a result of addition of the Source Insert, the addendum notes the lack of a change. Also included in the submittal are referenced calculations that provide details of the evaluation of compliance.
A CD is provided with this paper submittal, which contains the entire submittal. The CD has four folders, Addendum, Drawings, References, and Data. The Addendum folder contains the entire addendum. The Drawings folder contains the Source Insert Drawing. The References folder contains the Energy*Solutions'* structural (ST-663), thermal (TH-031) and shielding (CALC-SNL-NU-392) calculations. The Data folder contains the thermal finite element analyses and the shielding MCNP analyses data, including the input and output files.
In order to allow time for fabrication of the insert so the initial user, Sandia National Laboratory, can meet their shipping schedule, we request action on this submittal as soon as possible and issue of the revised CoC by Dec. 1, 2011.

Should you or members of your staff have questions about the submittal, please contact Mark Whittaker at (803) 758-1898 (mswhittaker@energysolutions.com).

Sincerely,

Mark Whittaker, CHP
Health Physicist – Radiological Services

Attachments:
1. SAR Addendum
2. SAR Drawing
3. References
4. Data (on CD)

SOURCE INSERT ADDENDUM

FOR

MODEL 10-160B

TYPE B RADWASTE SHIPPING CASK

September 2011

Energy*Solutions*
140 STONERIDGE DRIVE
COLUMBIA, SOUTH CAROLINA 29210

1.0 GENERAL INFORMATION

1.1 Introduction

This Addendum demonstrates that the Model 10-160B package, ID number USA/9204/B(U)F-96, can be used as a shipping package to transport a shield insert containing a large quantity of Co-60 in compliance with regulatory requirements under both normal conditions of transport and hypothetical accident conditions as required by 10CFR71.

1.2 Package Description

1.2.1 Packaging

There are no changes to the 10-160B cask described in Chapter 1 of the SAR. A source insert, used to contain the radioactive sources, is added as an additional component of the packaging.

The source insert provides photon (gamma) shielding in the forms of lead and steel for photon shielding. The photon shield has side walls consisting of lead with a total thickness of 6.0 inches, located between an inner 8.0-inch (nominal) SCH 60 steel pipe and an outer 24.0-inch (nominal) SCH 60 steel pipe. The bottom consists of 6.0 inches of lead supported by a 0.75-inch thick steel base plate. The lid includes a steel encased lead plug (nominal lead thickness 8 7/8 inches), steel bolting plate, and flat silicon rubber gasket.

1.2.2 Operational Features

There are no changes to the Operational Features of the Packaging described in Chapter 1 of the SAR. Refer to the General Arrangement Drawing of the package in SAR Chapter 1, Appendix 1.3.

1.2.3 Contents of Packaging

1.2.3.1 Cask Contents

The radioactive material consists of solid items with a maximum of 10,000 Curies (Ci) of Cobalt-60 (Co-60). The radioactive items will be loaded into the shield insert.

For this Addendum,

The type and form of material will include:

1) Byproduct material as normal form solid metal.

Maximum quantity of material per package:

1) 10,000 Ci of Co-60 contained in a shield insert specified in Drawing C-038-145082-004.
2) The maximum decay heat will not exceed 200 watts.
3) The contents of the source insert have a maximum mass of 500 pounds.
4) The total weight of contents, shoring, and source insert shall not exceed 14,500 pounds.
5) The contents of the source insert shall not include water or organic materials, explosives, corrosives, pyrophorics, or compressed gases.

1.3 Appendix - Source Insert Drawing (C-038-145082-004)

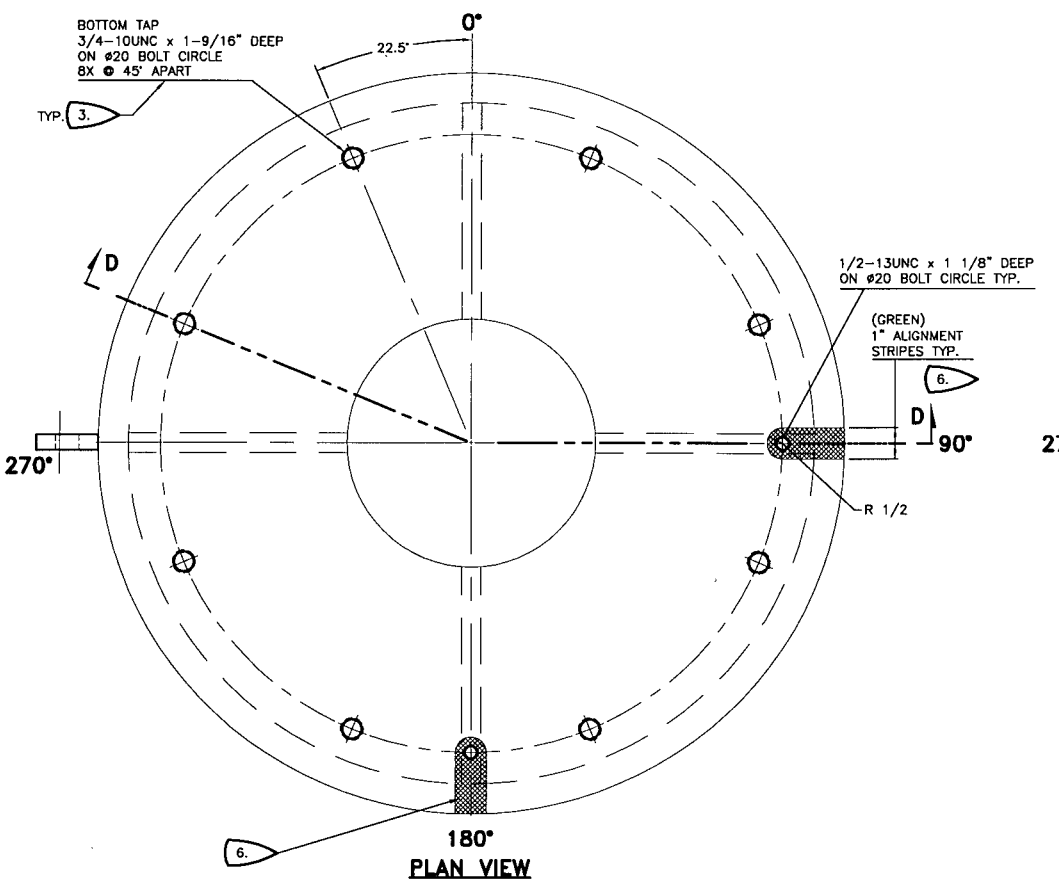

PLAN VIEW

SOURCE INSERT BODY

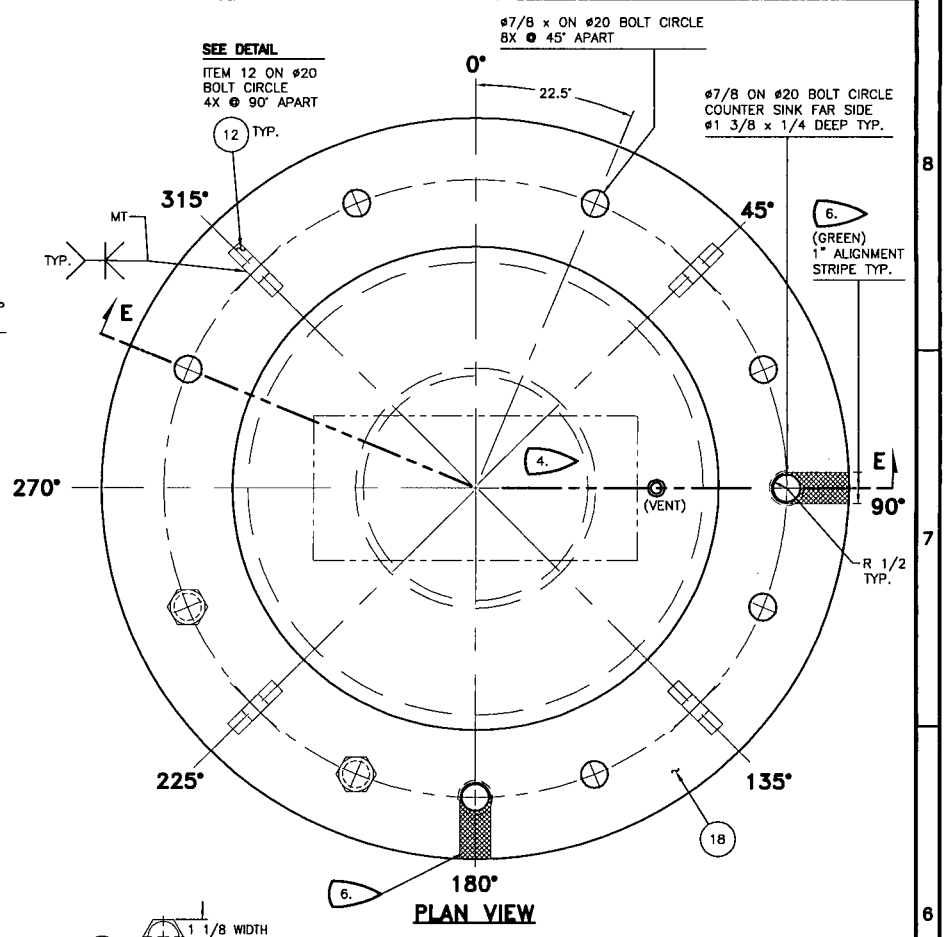

PLAN VIEW

SOURCE INSERT LID

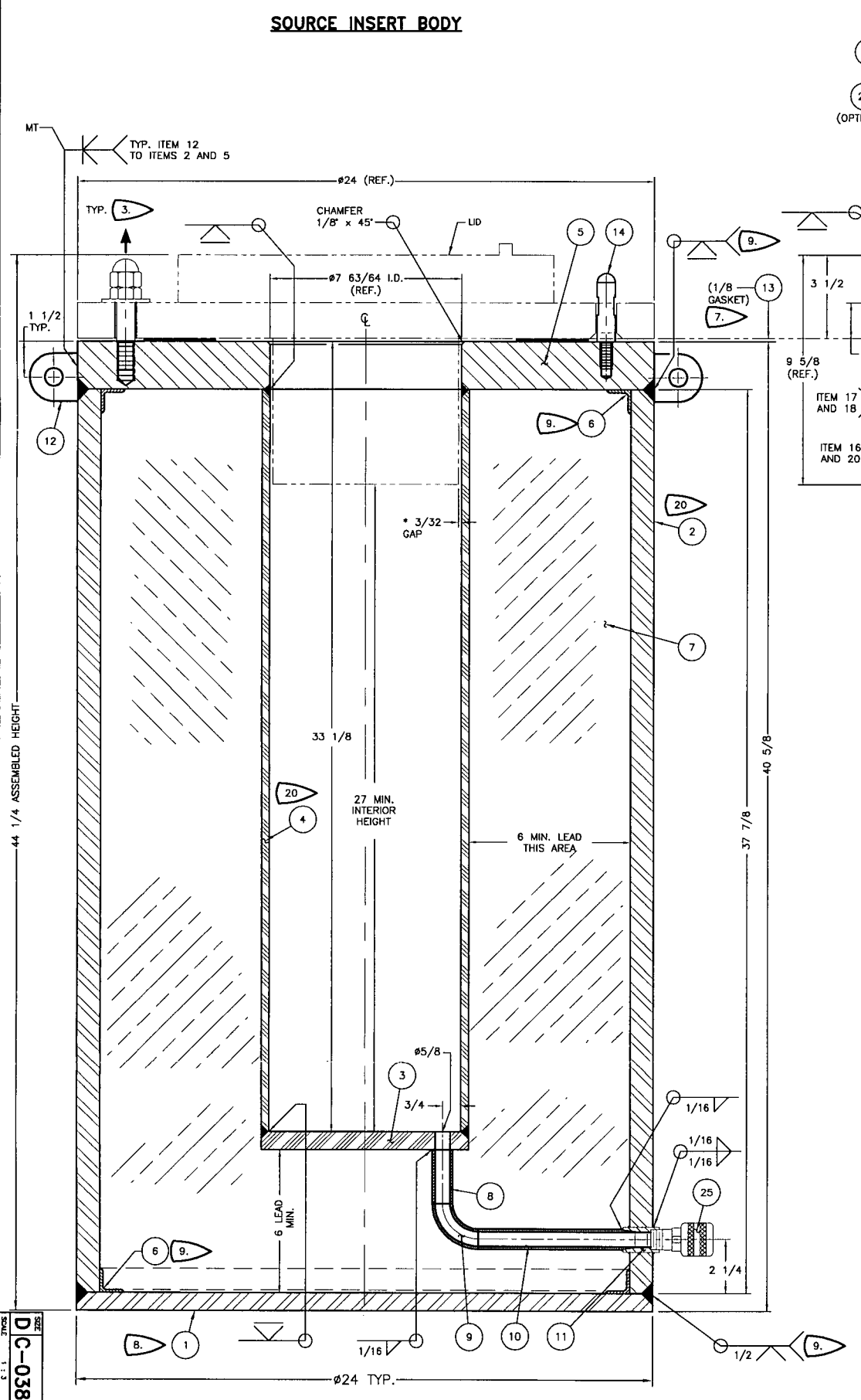

SECTION D-D

SOURCE INSERT BODY

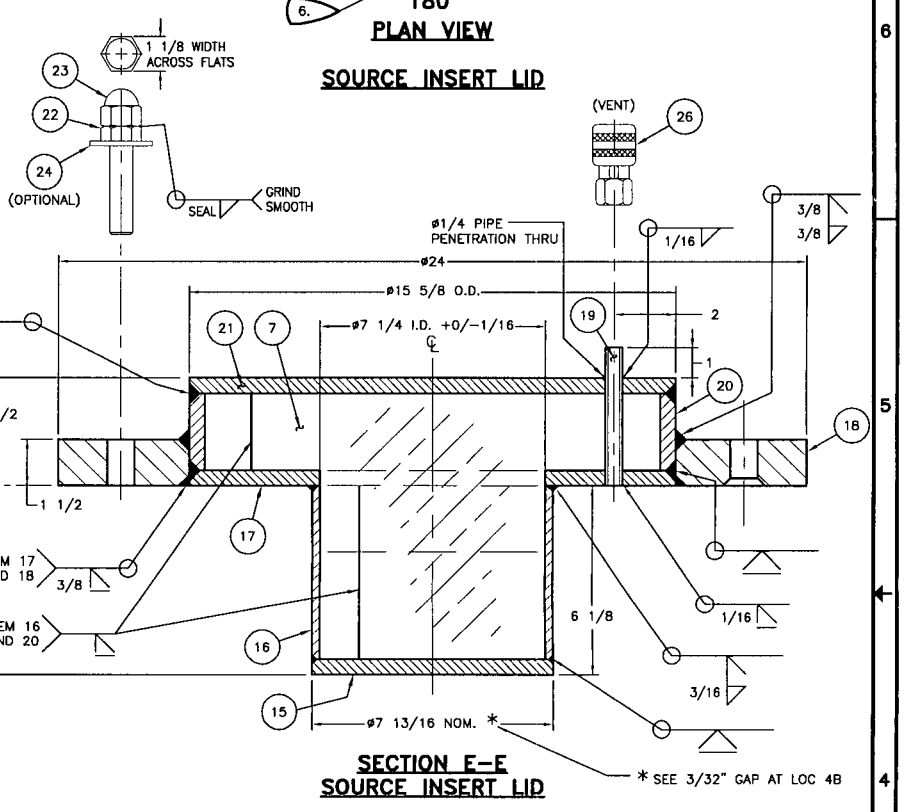

SECTION E-E

SOURCE INSERT LID

-NOTES SHOWN ON SHEET 2 OF 2-

	ITEM	QTY	DESCRIPTION	SPEC. AND / OR PART No.
	26	1	QUICK COUPLING, 3/8" NOM. x 1/4" FNPT, SERIES 30	PARKER No. B35C OR EQUAL
	25	1	QUICK COUPLING, 3/8" NOM. x 1/2" MNPT, SERIES 30	PARKER No. B34F OR EQUAL
	24	8	FLAT WASHER x ø3/4" NOM., ALLOY (OPTIONAL)	COMMERCIAL
	23	8	ACORN NUT x ø3/4" NOM., (1-1/8" ACROSS FLATS)	COMMERCIAL
	22	8	HEX HEAD CAP SCREW 3/4-10UNC x 3" LG., GR. 5 (PARTIALLY THREADED)	SAE J429
	21	1	PLATE 1/2" THK. x ø15-5/8" DIA., C.S.	ASTM A516 GR. 70
	20	1	PLATE 1/2" THK. x 7-1/4" I.D. x ø15-5/8" O.D., C.S.	ASTM A516 GR. 70
	19	1	PIPE ø1/4" SCH. 40 x 4-1/2" LG., T.O.E., C.S.	ASTM A106
	18	1	PLATE 1-1/2" THK. x 15-5/8" I.D. x ø24" O.D., C.S.	ASTM A516 GR. 70
	17	1	PLATE 1/2" THK. x 2-1/2" x ø15-5/8" O.D. (ROLLED), C.S.	ASTM A516 GR. 70
	16	1	PLATE 1/4" THK. x 5-5/8" x ø7-13/16 (REF.) (ROLLED), C.S.	ASTM A516 GR. 70
	15	1	PLATE 1/2" THK. x øA/R" O.D., C.S.	ASTM A516 GR. 70
	14	2	ROUND STOCK ø3/4" x 3-7/8" LG., C.S.	ASTM A36
	13	1	GASKET 1/8" THK. x ø12-1/2" I.D. x 18-1/2" O.D., 50 DURO	NEOPRENE
	12	8	PLATE 1/2" THK. x 2" x 2", C.S.	ASTM A516 GR. 70
	11	1	1/2" FULL COUPLING, CLASS 3000 C.S.	ASTM A182
	10	1	1/2" PIPE SCH. 40 x LENGTH AS REQUIRED, T.O.E., C.S.	ASTM A53
	9	1	1/2" ELBOW 90°, SCH. 40, B.W., L.R., C.S.	ASTM A234
	8	1	1/2" PIPE SCH. 40 x LENGTH AS REQUIRED, C.S.	ASTM A53
	7	A/R	LEAD X THICKNESS AS REQUIRED	ASTM B29
9.	6	1	ANGLE x 1" x 1" x 1/8" THK., C.S. (ROLLED)	ASTM A36
	5	1	PLATE 2" THK. x ø7-63/64" I.D. x ø24" O.D., C.S.	ASTM A516 GR. 70
20.	4	1	SEAMLESS PIPE ø8" SCH. 40 x 31-1/8" LG., C.S.	ASTM A106 GR. C
	3	1	PLATE 3/4" THK. x ø8-5/8" O.D., C.S.	ASTM A516 GR. 70
20.	2	1	SEAMLESS PIPE ø24" SCH. 60 x 37-7/8" LG., C.S.	ASTM A106 GR. C
	1	1	PLATE 3/4" THK. x ø24" O.D., C.S.	ASTM A516 GR. 70

BILL OF MATERIALS

PROPRIETARY
[X] NON-PROPRIETARY

TOLERANCES (UNLESS NOTED)
HOLE DIA. & LOC. ±1/32 DEC. .X ±.1
DEC. .XX ±.01 DEC. .XXX ±.005
ANGLES ±1° FRACTIONS ±1/8
DOES NOT APPLY TO REFERENCE DIMENSIONS

THIS DRAWING IS THE PROPERTY OF ENERGYSOLUTIONS IT IS LOANED UPON THE CONDITION THAT IT IS NOT TO BE REPRODUCED, COPIED OR LOANED TO OTHERS WITHOUT WRITTEN PERMISSION OF ENERGYSOLUTIONS AND IS TO BE RETURNED UPON REQUEST.

FSCM No. 54643

DO NOT SCALE PRINT
DIMENSIONS ARE IN INCHES UNLESS NOTED
CAD FILE No. C0381450830010400
REVIEWERS OF ORIGINAL (REV. 0)

DRAWN BY	P. PREVATTE	08/29/11
CHECKED BY		
ENGINEER		

ENERGYSOLUTIONS

SOURCE INSERT
ASSEMBLY AND DETAILS

SIZE D | DRAWING NUMBER C-038-145083-004 | REV. 0
SCALE 1 : 3 | WT. N / A | SHEET 1 OF 2

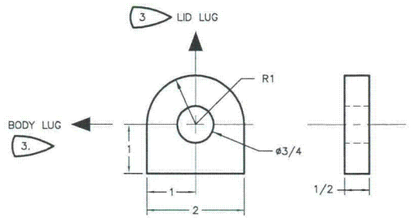

ITEM 12 DETAIL

SCALE: N.T.S.
4 REQUIRED CONTAINER LID
4 REQUIRED ON BODY

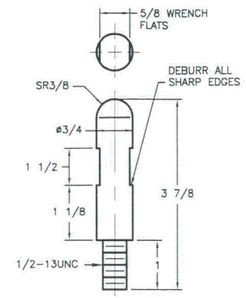

ITEM 14 DETAIL

SCALE: N.T.S.
2 REQUIRED
PAINT (BLACK)

NOTES:

1. NON-DESTRUCTIVE EXAMINATION OF WELDS SHALL MEET THE REQUIREMENTS AND ACCEPTANCE CRITERIA OF ASME CODE SECTION III, DIV. 1 SUBSECTION NF-5000.

2. WELDS ON LIFTING LUGS SHALL BE MT INSPECTED BEFORE AND AFTER 150% LOAD TEST IN ACCORDANCE WITH THE REQUIREMENTS AND ACCEPTANCE CRITERIA OF ASME CODE SECTION III, DIV. 1, SUBSECTION NF-5000.

3. → LOAD TEST DIRECTIONS

4. STAMP OR STENCIL THE FOLLOWING INFORMATION AS SHOWN:

PLACE ON OUTER BODY SHELL APPROX. TYP. 2 PLACES 180° APART AND ON TOP LID AS SHOWN

ENERGYSOLUTIONS
DATE OF MANUFACTURE XX-YY

SERIAL No. _____-XXX
PACKAGE GROSS WEIGHT: ????? lbs.
OUTER LID WEIGHT: _____
INNER LID WEIGHT: _____

5. STENCIL AS SHOWN: → **LID LIFT ONLY!** BLACK, MIN. 1/4" HEIGHT.

6. APPLY ALIGNMENT STRIPE IN-LINE WITH ALIGNMENT PIN AND ADJACENT HOLES TYP.

7. APPLY RTV TYPE ADHESIVE TO SECURE GASKET TO ITEM 13

8. THIS PLATE NOT TO BE WELDED UNTIL ITEM 7 HAS BEEN INSTALLED.

9. WELDS SHALL USE A BACKING RING WITH CONFIGURATION APPROVED BY ENERGYSOLUTIONS.

10. WELDING SHALL BE IN ACCORDANCE WITH ASME CODE SECTION IX. ALL WELDS TO BE FULL PENETRATION UNLESS OTHERWISE SPECIFIED, WELD PREP CHOICE BY FABRICATOR WITH ENERGYSOLUTIONS APPROVAL.

11. GAMMA SHIELDING INTEGRITY EFFECTIVENESS: ALL SHIELDING SHALL BE APPLIED CONTINUOUSLY TO AVOID GAPS OR RADIATION STREAMING PATHS. GAMMA SCAN OR GAMMA PROBE IS REQUIRED TO ENSURE GAMMA SHIELDING INTEGRITY. LOSS OF SHIELDING AT ANY POINT IN EXCESS OF 10% WILL REQUIRE REMEDY. THE PROCEDURES AND EQUIPMENT TO BE USED FOR THE GAMMA SCAN SHALL BE APPROVED BY ENERGYSOLUTIONS PRIOR TO PERFORMANCE OF THE TEST.

12. TORQUE LID BOLTS TO 75 +10/-0 ft-lbs (LUBRICATED).

13. MAX PAYLOAD WEIGHT: 500 lbs. / MAXIMUM PACKAGE WEIGHT: 8,000 lbs.

14. UNLESS OTHERWISE NOTED ALL DIMENSIONS ARE NOMINAL WITH MAXIMUM TOLERANCES OF ± 1/4", ANGLES ARE ±5°.

15. ALL LISTED MATERIAL AS SHOWN OR AN ENERGYSOLUTIONS APPROVED EQUAL.

16. PAINT SHALL BE IN ACCORDANCE WITH ENERGYSOLUTIONS APPROVED PROCEDURES.

17. ALIGNMENT INDICATORS ARE PROVIDED ON LID, BODY FOR PROPER COMPONENTS ORIENTATION AT ASSEMBLY.

18. ALL FASTENERS SHALL BE MANUFACTURED IN U.S.A. HEAD MARKINGS SHALL BE VERIFIED AGAINST LATEST D.O.E. COUNTERFEIT CHART. ENERGYSOLUTIONS SUPPLIED.

19. VENDOR TO WEIGHT COMPONENTS AND STENCIL WEIGHTS.

20. OPTIONALLY THESE COMPONENTS MAY BE FABRICATED FROM A-516 GR. 70 MATERIAL. WHEN USING THIS MATERIAL OPTION - VENDOR SHALL FABRICATE TO DUPLICATE PIPE SIZES. AND PROVIDE A FULL PENETRATION SEAM WELD, GRIND SMOOTH ON I.D.

☐ PROPRIETARY ☒ NON-PROPRIETARY	FSCM No. 54643	ENERGYSOLUTIONS
TOLERANCES (UNLESS NOTED) HOLE DIA. & LOC. ±1/32 DEC. .X ±.1 DEC. .XX ±.01 DEC. .XXX ±.005 ANGLES ±1° FRACTIONS ±1/8 DOES NOT APPLY TO REFERENCE DIMENSIONS	DO NOT SCALE PRINT DIMENSIONS ARE IN INCHES UNLESS NOTED CAD FILE No. C0381450830040200 REVIEWERS OF ORIGINAL (REV. 0)	SOURCE INSERT ASSEMBLY AND DETAILS
THIS DRAWING IS THE PROPERTY OF ENERGYSOLUTIONS IT IS LOANED UPON THE CONDITION THAT IT IS NOT TO BE REPRODUCED, COPIED OR LOANED TO OTHERS WITHOUT WRITTEN PERMISSION OF ENERGYSOLUTIONS AND IS TO BE RETURNED UPON REQUEST.	DRAWN BY P. PREVATTE 08/29/11 CHECKED BY ENGINEER	SIZE D DRAWING NUMBER C-038-145083-004 REV. 0 SCALE 1 : 1 WT. N / A SHEET 2 OF 2

2.0 STRUCTURAL EVALUATION

No changes.

2.1 Structural Design

No changes.

2.2 Weights and Center of Gravity

The 10-160B Cask SAR limits the payload to 14,500 lbs. The weight of the Co-60 source insert is itemized as follows:

Source Insert Body	6,500	lb
Source Insert Lid	500	lb
Source Payload	500	lb
Source Insert	7,500	lb
Design Source Insert Weight	8,000	lb

The wood cribbing that will be used to support the insert inside the 10-160B cask will weigh less than 2,500 lbs. Therefore, the combined maximum load inside the 10-160B cask will be 10,500 lbs – much smaller than the licensed weight of 14,500 lbs.

The Source Insert is placed in the 10-160B cask in such a way that its C.G. is located near the C.G. of the 10-160B Cask. Therefore, the combined C.G. of the 10-160B package will remain at the same location as that analyzed in the SAR.

2.3 Mechanical Properties of Materials

The steel (A-516 Gr. 70) and the lead (B-29) material used for the construction of the source insert are the same as those specified in the SAR. The bolts used for the attachment of the lid to the body are specified to be SAE J-429 Gr.5. The mechanical properties of these bolts are as follows.

Yield Stress, S_y = 92,000 psi

Ultímate Stress, S_u = 120,000 psi

Design Stress Intensity, S_m = 23,000 psi

Under NCT loading the allowable stresses are as follows.

Membrane stress = 46,000 psi

Membrane + bending stress = 69,000 psi

Shear stress = 27,600 psi

Under HAC loading the allowable stresses are as follows.

Membrane stress = 105,000 psi

Membrane + bending stress = 150,000 psi

Shear stress = 50,400 psi

2.4 General Standards for All Packages

No changes.

2.4.1 Chemical and Galvanic Reactions

No changes.

2.4.2 Positive Closure

No changes.

2.4.3 Lifting Devices

The lifting arrangement of the 10-160B Cask package remains the same. No changes in the SAR for lifting analyses of the package are made. The handling of the Co-60 source insert is not directly under the jurisdiction of 10 CFR Part 71 as it is performed in the confines of the controlled area of the shipper. Nonetheless, the lifting arrangement of the Co-60 source insert has been evaluated in Reference 26 based on the requirements of 10 CFR Part 71. It has been shown that the lifting attachments meet those requirements.

2.4.4 Tie-Down Devices

No changes. The tie-down devices of the 10-160B Cask remain the same.

2.5 Standards for Type B and Larger Quantity Packaging

Not applicable.

2.6 Normal Condition of Transport

No changes.

2.6.1 Heat

Evaluation of the temperature distribution in the 10-160B Cask with the Co-60 source insert has been performed in Section 3 Addendum. It has been demonstrated that the temperature distribution in the cask results in temperature values and gradients that are within those analyzed in the SAR. Therefore, no changes in the SAR are needed.

The temperature distribution in the Co-60 source insert is fairly uniform with a little or no temperature gradients (see Figure 10 of Reference 12 in Section 3). Therefore, the stresses in the structural components of the Co-60 source insert will be negligible.

2.6.2 Cold

No changes.

2.6.3 Pressure

The cavity temperature of the 10-160B Cask package, with the Co-60 source insert is conservatively estimated to be 231.2°F. The maximum operating pressure calculated based on this temperature is 3.91 psig (see Section 3.4.4), which is smaller than 8.4 psig used in the SAR.

2.6.4 Vibration

No changes.

2.6.5 Water Spray

No changes.

2.6.6 Free Drop

No changes.

2.6.6.1 End Drop

The effect of 1-ft free drop of the cask package in the end drop orientation on the Co-60 source insert has been analyzed in Section 6.3 of Reference 26 and is shown to meet all the applicable stress allowable values listed in the SAR.

2.6.6.2 Side Drop

The effect of 1-ft free drop of the cask package in the side drop orientation on the Co-60 source insert has been analyzed in Section 6.3 of Reference 26 and is shown to meet all the applicable stress allowable values listed in the SAR.

2.6.6.3 Corner Drop

The effect of 1-ft free drop of the cask package in the corner drop orientation on the Co-60 source insert has been analyzed in Section 6.3 of Reference 26 and is shown to meet all the applicable stress allowable values listed in the SAR.

2.6.7 (Successive) Corner Drop

Not applicable.

2.6.8 Penetration

No changes.

2.7 Hypothetical Accident Conditions

No changes.

2.7.1 Free Drop

The SAR has evaluated the 10-160B Cask package for the hypothetical accident drop test conditions with a generic payload. The specific payload comprising of the Co-60 source insert and the cribbing, meets the payload limits of the SAR. Therefore, there is no change in SAR analyses. The evaluation of the Co-60 source insert during these drop tests are addressed in the following sections.

2.7.1.1 Free Drop Impact – End Drop

The effect of 30-ft free drop of the cask package in the end drop orientation on the Co-60 source insert has been analyzed in Section 6.2.1 of Reference 26 for the impact on the bottom end, and Section 6.2.2 of Reference 26 for the top end impact. It is shown that the stresses in every component of the Co-60 source insert meet all the applicable stress allowable values listed in the SAR.

2.7.1.1.1 End Drop Secondary Lid Bolt Forces

No changes.

2.7.1.1.2 End Drop Primary Lid Bolt Forces

No changes.

2.7.1.1.3 Lead Slump

There are no changes in the lead slump evaluation of the 10-160B Cask body presented in the SAR. The effect of lead slump in the Co-60 source insert has been evaluated in Section 6.4.1 of Reference 26. It has been shown that the lead-shielding used in the insert undergoes a maximum deformation of 0.049 in. Since the stresses in the lead column are much smaller than the plastic flow stress, most of this deformation is recovered resulting in very small lead slump, if any.

2.7.1.2 Free Drop Impact-Side Drop

The effect of 30-ft free drop of the cask package in the side drop orientation on the Co-60 source insert has been analyzed in Section 6.2.3 of Reference 26. It is shown that the stresses in every component of the Co-60 source insert meet all the applicable stress allowable values listed in the SAR.

2.7.1.3 Free Drop Impact-Corner Drop

The effect of 30-ft free drop of the cask package in the corner drop orientation on the Co-60 source insert has been addressed in Section 6.2 of Reference 26. It has been shown that the deceleration loading on the Co-60 source insert during this drop is enveloped by the end drop and side deceleration loadings. No separate evaluation of the Co-60 source insert was needed.

2.7.1.4 Oblique Drop

No changes.

2.7.1.5 Impact Limiter Attachment Forces

No changes.

2.7.2 Puncture

No changes.

2.7.3 Thermal

No changes.

2.7.3.1 Summary of Pressures and Temperatures

The temperature distribution in the 10-160B Cask, with the Co-60 source insert is shown in Reference 26 to envelop the values used in the SAR. No changes in this section are needed.

2.7.3.2 Differential Thermal Expansion

No changes.

2.7.3.3 Stress Calculation

The temperature distribution in the 10-160B Cask, with the Co-60 source container is shown in Reference 26 to envelop the values used in the SAR. No changes in this section are needed.

2.7.4 Water Immersion

No changes.

2.7.5 Summary of Damage

No changes.

2.8 Special Form

Not applicable.

2.9 Fuel Rods

Not applicable.

2.10 Appendix to Section 2.0

2.10.1 Foam Impact Limiter Analytical Methods

No changes.

2.10.2 ANSYS Finite Element Analysis of Cask Body Structure

No changes.

2.10.3 Summarized Results of Cask Structural Calculations

No changes.

2.10.4 References

26. Energy*Solutions* Document ST-663, Rev.0, Structural Evaluation of the Co-60 Source Package for the NCT & HAC Tests.

3.0 THERMAL EVALUATION

No changes.

3.1 Discussion

The 10-160B Cask SAR provides the analyses of the cask package with a generic heat load of 200 Watt. The source container used in the 2-d finite element analyses discussed in Section 3.5.1.3 and Reference 11 was an arbitrary small size container. The thermal analyses of the Co-60 source insert for the NCT and HAC fire test has been performed using 2-d axisymmetric models with the appropriate dimensions and geometry.

The heat load of the Co-60 source is 153.9 Watt. Conservatively 200 Watt of internal heat load is used in the thermal analyses reported in this addendum.

The results of the Co-60 source insert for the NCT are summarized in Table 3.1-3 and for HAC in Table 3.1-4. In these tables it is shown that the summary presented in Tables 3.1-1 and 3.1-2 of the SAR envelop the corresponding results obtained for the Co-60 source package.

3.2 Summary of Thermal Properties of Materials

No new thermal properties have been used in the analyses of the Co-60 source package.

3.3 Technical Specifications of Components

The steel and the lead material used for the construction of the Co-60 source insert are the same as those specified in the SAR.

3.4 Thermal Evaluation for Normal Conditions of Transport

No changes.

3.4.1 Thermal Model

The finite element model used for the thermal analysis of the 10-160B Cask with the Co-60 source insert comprises of 2-dimensional axisymmetric solid and contact elements. The details of the finite element model used in the analyses are provided in Reference 12. The Co-60 source insert model uses some conservative simplifications that are documented in Reference 12.

The boundary conditions used in the analysis of the Co-60 source package are the same as those used in the SAR.

3.4.2 Maximum Temperatures

The maximum temperatures in various parts of the Co-60 source package during NCT are reported in Table 3.1-3. These values are compared with those reported in the SAR.

3.4.3 Minimum Temperature

No changes.

3.4.4 Maximum Internal Pressures

The bulk air temperature of 231.2°F reported in Table 3.1-3 is higher than that reported in the SAR. The maximum internal pressure of the cask with the increased temperature of 231.2°F (rounded to 240°F) is presented below.

The maximum internal pressure of the cask is calculated assuming that the gas within the cask behaves as an ideal gas. To determine the maximum internal pressure under normal conditions in the cask (MNOP) the temperature of the gas mixture within the cask was evaluated. The maximum pressure is due to the increased temperature of the gas in the cavity. The insert and cask cavity are dry and there are no materials in the insert that will generate gas by radiolysis.

1. The cask on loading has an internal pressure equal to ambient, assumed to be 14.7 psi at 70°F.
2. The pressure in the cask at 240°F (T_2, the maximum temperature under normal conditions), P_2, may be calculated by the ideal gas relationship:

   $P_2 = \frac{T_2}{T_1} \times P_1$, where T is in degrees absolute

   $P_2 = 18.3$ psi

Therefore, the calculated maximum normal operating pressure (in gage pressure) is,

MNOP = 18.3 – 14.7 = 3.6 psig

The value used for MNOP is conservatively set at 35.0 psig. Since the MNOP for the Source Insert in the 10-160B is less than the value in the base SAR, no change is required.

3.4.5 Maximum Thermal Stresses

No changes.

3.4.6 Evaluation of Package Performance for Normal Conditions of Transport

No changes.

3.5 Hypothetical Accident Thermal Evaluation

No changes.

3.5.1 Thermal Model

The finite element model used for the thermal analysis of the 10-160B Cask with the Co-60 source insert comprises of 2-dimensional axisymmetric solid and contact elements. The details of the finite element model used in the analyses are provided in Reference 12. The Co-60 source insert model uses some conservative simplifications that are documented in Reference 12.

The boundary conditions used in the analysis of the Co-60 source package are the as those used in the SAR with some conservative modifications that are detailed in Reference 12.

3.5.2 Package Conditions and Environment

No changes.

3.5.3 Package Temperatures

The maximum temperatures in various parts of the Co-60 source package during HAC fire test are reported in Table 3.1-4. These values are compared with those reported in the SAR.

3.5.4 Maximum Internal Pressures

The bulk air temperature of 296°F reported in Table 3.1-4 is higher than that used in the SAR for evaluation of the cask internal pressure (200°F). The maximum internal pressure of the cask with the increased temperature of 296°F (rounded to 300°F) is presented below.

The maximum internal pressure of the cask is calculated assuming that the gas within the cask behaves as an ideal gas.

The temperature of the gas mixture within the cask is evaluated (see Table 3.1-4). The average gas temperature in the cask under HAC is conservatively set at 300°F. Assuming 14.7 psia (see Section 3.3.2) exists inside the cask at 70°F, the pressure in the cask at 300°F, P_2, may be calculated by the ideal gas relationship:

$$P_2 = \frac{T_2}{T_1} \cdot P_1 \text{, where T is in degrees absolute}$$

$$P_2 = 21.8 \text{ psia}$$

Therefore, the maximum pressure during the HAC fire,

$$P_{max} = 21.8 - 14.7 = 6.4 \text{ psig}$$

The value used for P_{max} is conservatively set at 100 psig. Since the P_{max} for the Source Insert in the 10-160B is less than the value in the base SAR, no change is required.

3.5.5 Maximum Thermal Stresses

No changes.

3.5.6 Evaluation of Package Performance for the Hypothetical Accident Thermal Conditions

No changes.

3.6 References

12. Energy*Solutions* Document TH-031, Rev.0, Thermal Analyses of the Co-60 Source Package for NCT & HAC Fire Test.

Table 3.1-3

Summary of NCT Hot Environment Analysis Results

Component	Maximum Temperature °F	
	Calculated Co-60 Source Package Value	SAR Value
Difference across the cask body(1)	0.11	0.2
Difference across the outer shell(2)	0.04	0.0
Difference across the inner shell(3)	0.01	0.0
Average Wall(4)	166.1	173
Lead(5)	166.2	173
Body(6)	168.4	175
Seal(7)	168.1	174
Bulk Air(8)	231.2	188
Payload (Source) (9)	233.1	-

NOTES:

(1) Difference of Node 377 and Node 314 Temperature. See Figure 7 of Reference 12.
(2) Difference of Node 377 and Node 409 Temperature. See Figure 7 of Reference 12.
(3) Difference of Node 283 and Node 314 Temperature. See Figure 7 of Reference 12.
(4) Average of Node 377 and Node 314 Temperature. See Figure 7 of Reference 12.
(5) Average of Node 409 and Node 283 Temperature. See Figure 7 of Reference 12.
(6) Maximum temperature from Figure 8 of Reference 12.
(7) Maximum of Node 153 and Node 80 temperatures. See Figure 7 of Reference 12.
(8) Maximum temperature from Figure 9 of Reference 12.
(9) Maximum temperature from Figure 10 of Reference 12.

Table 3.1-4

Summary of HAC Fire Test Analysis Results

Component	Maximum Temperature °F		
	Calculated Co-60 Source Package Value	Value Calculated in the SAR	Value Used in the Analyses in the SAR
Difference across the cask body(1)	31.7	39.8	45
Difference across the outer shell(2)	15.2	20.2	24
Difference across the inner shell(3)	1.65	2.3	2
Average Wall(4)	294	279	334
Lead(5)	294	274	335
Body(6)	302	289	352
Seal(7)	206	164	352
Bulk Air(8)	296	188	200
Payload (Source) (9)	253	-	-

NOTES:

(1) Difference of Node 377 and Node 314 Temperature. See Appendix 3 of Reference 12.
(2) Difference of Node 377 and Node 409 Temperature. See Appendix 3 of Reference 12.
(3) Difference of Node 283 and Node 314 Temperature. See Appendix 3 of Reference 12.
(4) Average of Node 377 and Node 314 Temperature. See Appendix 3 of Reference 12.
(5) Average of Node 409 and Node 283 Temperature. See Appendix 3 of Reference 12.
(6) Maximum temperature at Node 377. See Figure 7 and Appendix 3 of Reference 12.
(7) Maximum of Node 153 and Node 80 temperatures. See Appendix 3 of Reference 12.
(8) Maximum temperature from Figure 13. See also Appendix 3 of Reference 12.
(9) Maximum temperature from Figure 19. See also Appendix 3 of Reference 12.

4.0 CONTAINMENT

There are no changes to the containment evaluation found in Chapter 4 of the base SAR. The A_2 value of the new content is 909, which is less than the A_2 value used in the containment evaluation, i.e., 3000.

5. SHIELDING EVALUATION

This shielding evaluation supports exclusive use shipment of a shielded source Insert (hereafter referred to as the Insert) containing a maximum 10,000 Curies of Co-60 in the Model 10-160B Transport Cask (hereafter referred to as the Cask). The evaluation results documented in this chapter show that the combined shielding of the Insert and the Cask are adequate to meet the radiological requirements of 10 CFR 71 for exclusive use shipments.

5.1 Description of Shielding Design

5.1.1 Design Features

5.1.1.1 Operating Design

The Cask is designed, constructed, and prepared in accordance with 10 CFR 71.71 so that the maximum external dose rates do not exceed the criteria for NCT. The Cask is authorized by the U.S. Nuclear Regulatory Commission (NRC) to carry a payload of 14,500 pounds (6,577 kilograms) of Type B quantity radioactive byproduct, source, or special nuclear material. Furthermore, since it is a Type B package, it is designed so that the maximum external radiation dose rate will not exceed 1 rem/hr (1000 mrem/hr) at 1 meter from the external surface of the package under HAC. Both normal and accident condition dose rates described below are based on computer models that reflect the post-test package conditions.

The Insert is designed, constructed, and prepared for a one-time shipment as a shielded insert to the Cask. The Insert is comprised of gamma (i.e. photon) shielding that is to be supported and centered in the Cask cavity by wood shoring. The Insert is loaded into the Cask, which is then transported on an 8-foot wide drop-deck trailer.

Tests and analyses have demonstrated the ability of the packaging to maintain its shielding integrity during NCT. However, under HAC, neither the wood shoring nor the Co-60 source are expected to maintain structural integrity. Note that the wood shoring has not been modeled for either configuration. Multiple configurations and positions of the Cask and Insert for HAC are postulated and evaluated.

5.1.1.2. Shielding Design

Representative views of the Cask, Insert, and the Co-60 source are presented in Figures 5-1 through 5-4. A representative view of the shielding model of the Cask and Insert is presented in Figure 5-4 with a corresponding component and material specification summary presented in Table 5-1. Key dimensions are summarized in Table 5-2.

Figure 5-1. 10-160B Cask General Arrangement

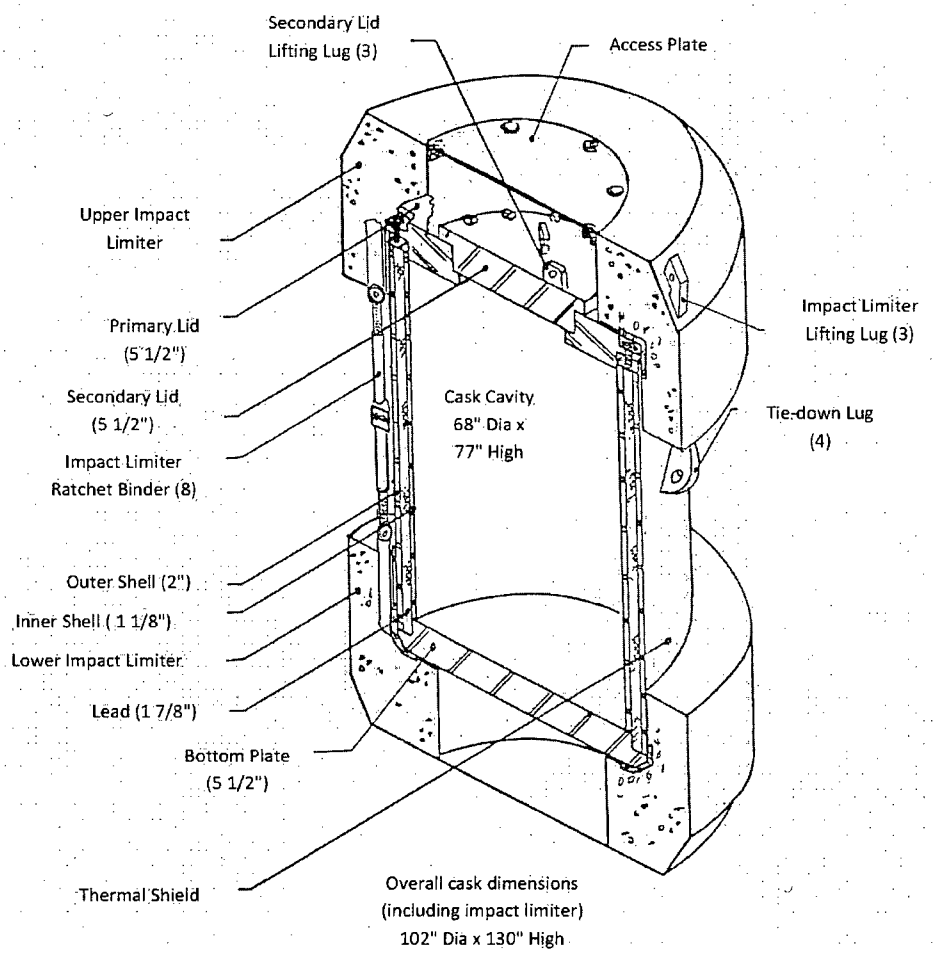

Figure 5-2. Cutaway View of Source Insert

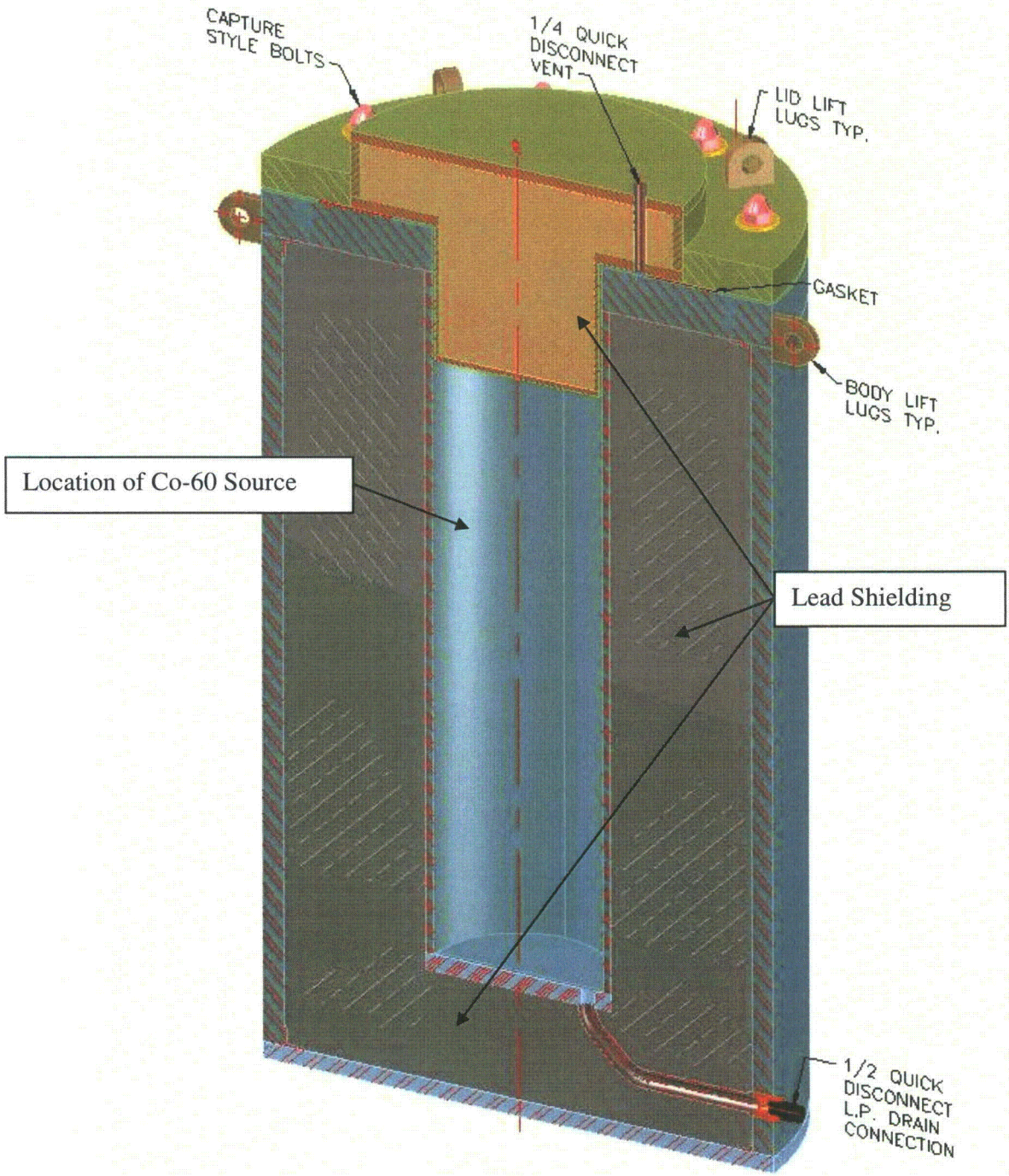

Figure 5-3. Elevation Plan View of Source Insert

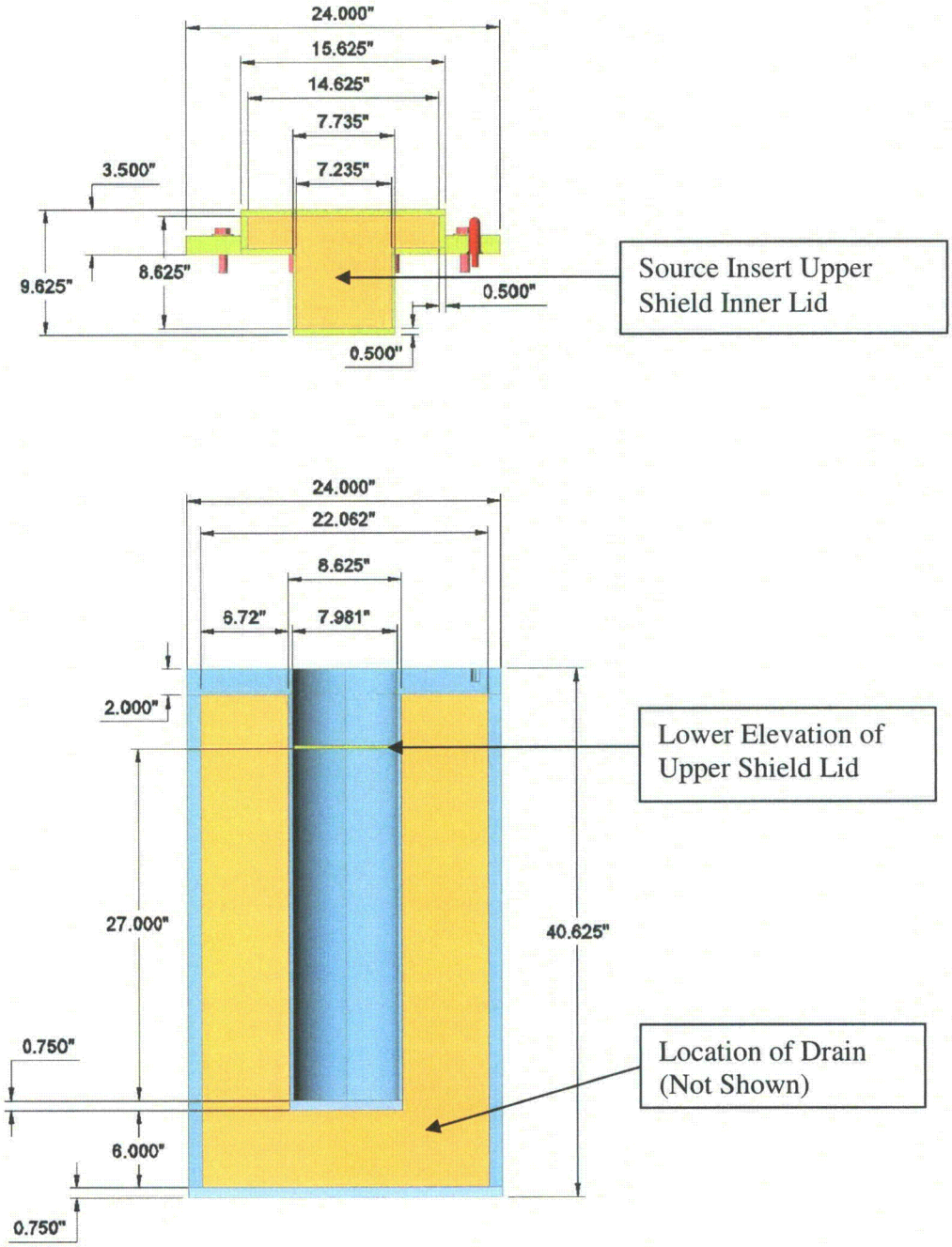

Figure 5-4. Elevation View of Shielding Model for 10-160B Cask with Source Insert Centered for NCT with Some Component Descriptions

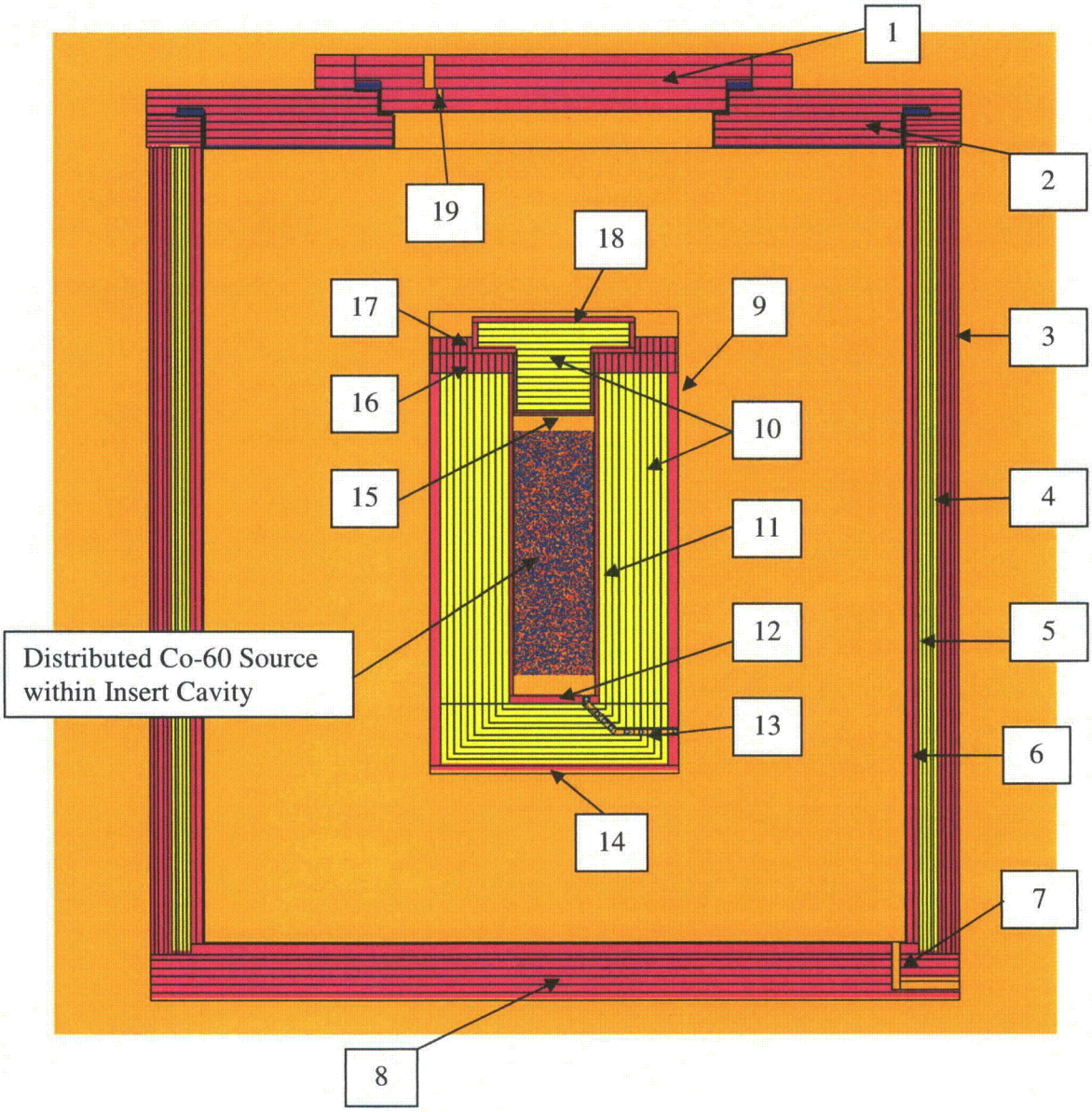

Table 5-1. Component Description and Material Specifications

Item Number (Figure 5-4)	Component Description and Material Specification
1	10-160B Secondary Lid: 5.5-inches thick, ASTM A516 Gr.70
2	10-160B Primary Lid: 5.5-inches thick, ASTM A516 Gr.70
3	10-160B Outer Shell: 2.0-inches thick, ASTM A516 Gr.70
4	Lead Shield: 1.875-inches thick ASTM B29 - Chemical Grade Lead
5	10-160B Inner Shell: 1.125-inches thick, ASTM A516 Gr.70
6	Inner Lining: 11 GA. ASTM 240, Type 304
7	Cask Drain
8	10-160B Base: 5.5-inches thick, ASTM A516 Gr.70
9	Seamless Pipe, 24-in OD, SCH. 60, ASTM A516 Grade B
10	Cast Lead Shield: 6.72-inches thick, ASTM B29 Chemical Grade Lead
11	Seamless Pipe, 8.0-in OD, SCH. 40, ASTM A516 Gr.70
12	Plate: 0.75-inches thick, ASTM A516 Gr.70
13	Insert Drain
14	Plate: 0.75-inches thick, ASTM A516 Gr.70
15	Plate: 0.50-inches thick, ASTM A516 Gr.70
16	Plate: 2.0-inches thick, ASTM A516 Gr.70
17	Plate: 1.5-inches thick, ASTM A516 Gr.70
18	Plate: 05-inches thick, ASTM A516 Gr.70
19	Cask Vents

Table 5-2. 10-160B Cask Dimensions

Component	Diameter (in)	Height (in)	Thickness (in)
Cavity	68	77	-
Liner	67.75 (ID)	76.75	0.125
Inner Shell	68 (ID)	77	1.125
Lead Layer	70.25 (ID)	77	1.875
Outer Shell	74 ID)	77	2
Lid	78 (OD)	-	5.5
Base	78 (OD)	-	5.5

As presented in Table 5-1 (extracted from Reference 10), the Cask side wall consists of an outer 2-inch thick steel shell surrounding 1-$^{7}/_{8}$ inches of lead and an inner containment shell wall of 1 1/8-inch thick steel. The cavity height is 76.75 inches. The Cask bottom, outer and inner lids are all comprised of two layers of steel with a total thickness of 5-½ inches. The Cask is modeled as right circular cylinders to define its geometry of lead and steel walls and lids.

The lid closure is made in an overlapping, stepped configuration to eliminate radiation streaming at the lid/Cask body interface such that either one or both lids can be removed for required access. The outer (primary) lid is removed for any object larger than 31 inches in diameter. The inner (secondary) lid is located at the center of the main lid, covering a 31-inch opening. The

secondary lid is constructed with multiple steps machined in its periphery, matching those in the primary lid, eliminating radiation streaming pathways.

Foam filled impact limiters cover the top and bottom of the vertically oriented Cask as located on the trailer. Although the Cask is modeled at 40-inches above the ground, the impact limiters are conservatively ignored for the purpose of the shielding evaluation. The ground is modeled as soil (see Table 5-6) to allow for photon interaction (reflection).

The Co-60 source is loaded into the Insert cavity, as shown in Figure 5-4. (Insert dimensions and materials are given in Reference 11.) The Insert is then centered inside the Cask both radially and axially for NCT. As presented in Figure 5-2, the Insert inner shell side walls are comprised of cast lead (density of 11.3 g/cm3 and a total thickness of 6.72 inches) located between an inner 8.0-inch (nominal) SCH 40 steel pipe and an outer 24.0-inch (nominal) SCH 60 steel pipe. The base consists of 6.0 inches of lead supported by a 0.75-inch thick steel base plate. The upper shield lid consists of 8.625-inches thick lead encased with steel.

All steel is modeled as ASTM A516 Grade 70 carbon steel, except for the 11 gauge Cask liner, which is modeled as ASTM 240, Type 304 stainless steel.

In addition, the Insert drain line was modeled as a series of vertical, 45-degree, and horizontal cylindrical segments (5/8-inch OD x 0.065-inch wall thickness) positioned near the bottom of the source region and penetrating the lead and steel gamma shielding. (See Figures 5-2 and 5-4). Since the Co-60 source may be stored underwater, the drain line allows water to drain from the Insert before loading into the Cask.

5.1.2 Summary of Maximum Dose Rates

Table 5-3 summarizes the dose rates for Normal Conditions of Transport (NCT) given the Cask loaded with the Insert. The maximum allowable NCT dose rates for exclusive use shipments given in 10 CFR 71.47(b) are also shown in Table 5-3 for comparison.

Table 5-3. Peak NCT Dose Rates for 10-160B Cask with Centered Source Insert

Normal Conditions of Transport	Package Surface mSv/h (mrem/h)			2 Meters from Package Surface mSv/h (mrem/h)		
Radiation	Top	Side	Bottom	Top	Side	Bottom
Gamma	0.029 (2.9)	0.008 (0.8)	0.065 (6.5)	0.002 (0.2)	0.001 (0.1)	NA[1]
Neutron	NA[2]	NA[2]	NA[2]	NA[2]	NA[2]	NA[2]
Total	0.029 (2.9)	0.008 (0.8)	0.065 (6.5)	0.002 (0.2)	0.001 (0.1)	NA[1]
10 CFR 71.47(b) Limit	2 (200)	2 (200)	2 (200)	0.1 (10)	0.1 (10)	0.1 (10)

[1]The Cask is assumed centered on a 8-foot wide conveyance with the outer surface of the Cask approximately 40-inches (101.6 cm) above ground level. A dose rate +2m from the base is not available.
[2]The source consists solely of Co-60 and contains no neutron-emitting radioisotopes.

Table 5-4 summarizes the dose rates for Hypothetical Accident Conditions (HAC) given the Insert and Co-60 source positioned in the worst-case geometric configuration following an accident. The maximum allowable HAC dose rates for Type B packages given in 10 CFR 71.53 are also shown in Table 5-4 for comparison.

Table 5-4. Peak HAC Dose Rates for 10-160B Cask with Centered Source Insert

Hypothetical Accident Conditions	1 Meter from Package Surface mSv/h (mrem/h)		
Radiation	Top[1]	Side[2]	Bottom[2]
Gamma	0.445 (44.5)	0.278 (27.8)	0.275 (27.5)
Neutron	NA[3]	NA[3]	NA[3]
Total	0.445 (44.5)	0.278 (27.8)	0.275 (27.5)
10 CFR 71.51(a)(2) Limit	10 (1000)	10 (1000)	10 (1000)

[1]The bounding top HAC dose rate occurs with the Insert inverted and positioned against the Cask inner top surface.
[2]The bounding side and bottom HAC dose rates occur with the Insert lying sideways on the Cask inner bottom surface.
[3]The source consists solely of Co-60 and contains no neutron-emitting radioisotopes.

5.2 Source Specification

5.2.1 Gamma Source

The decay of Co-60 emits photons (gammas) at specific energies, as summarized in Table 5-5. The photon source activity of 10,000 Curies of Co-60 is determined as follows:

Co-60 Activity = (10,000 Ci) x (3.7E+10 disintegration/s/Ci) x (2 γ/disintegration) = 7.4E+14 γ/s

Photon emission probability versus energy for the decay of Co-60 was obtained from www.nndc.bnl.gov/nudata2/dec_search.jsp. The total activity was conservatively derived assuming two photons per decay.

Table 5-5. Co-60 Decay Photons vs. Energy

Energy (MeV)	Photon Emission Probability
0.347147	7.5E-05
0.826103	7.6E-05
1.1732283	0.9985
1.3324924	0.999826
2.158573	1.2E-05
2.5056925	2.0E-06
Total Photons per Decay	1.998485

5.2.2 Neutron Source

The Co-60 source term contains no neutron emitting radioisotopes.

5.3 Shielding Model

5.3.1 Configuration of Source and Shielding

5.3.1.1 Standalone Insert

Figure 5-5 shows the model of the standalone Insert. Figure 5-6 shows the Insert drain line region in greater detail, including the tally spheres used to conduct the streaming analysis of the drain line.

The Insert consists of a gamma shield surrounding a source cavity, and is designed to house a 10,000 curie gamma source. The Co-60 gamma source is modeled as being distributed over the cavity volume, with a nominal void volume above and below the source to allow for dunnage and/or incomplete filling of the cavity. If no dunnage is used, then the model is conservative because it slightly concentrates the maximum source term.

The composition of the source is conservatively modeled as air. This conservatively eliminates any self-shielding due to the source material.

Figure 5-5. Elevation View of Standalone Shielding Model for the Source Insert

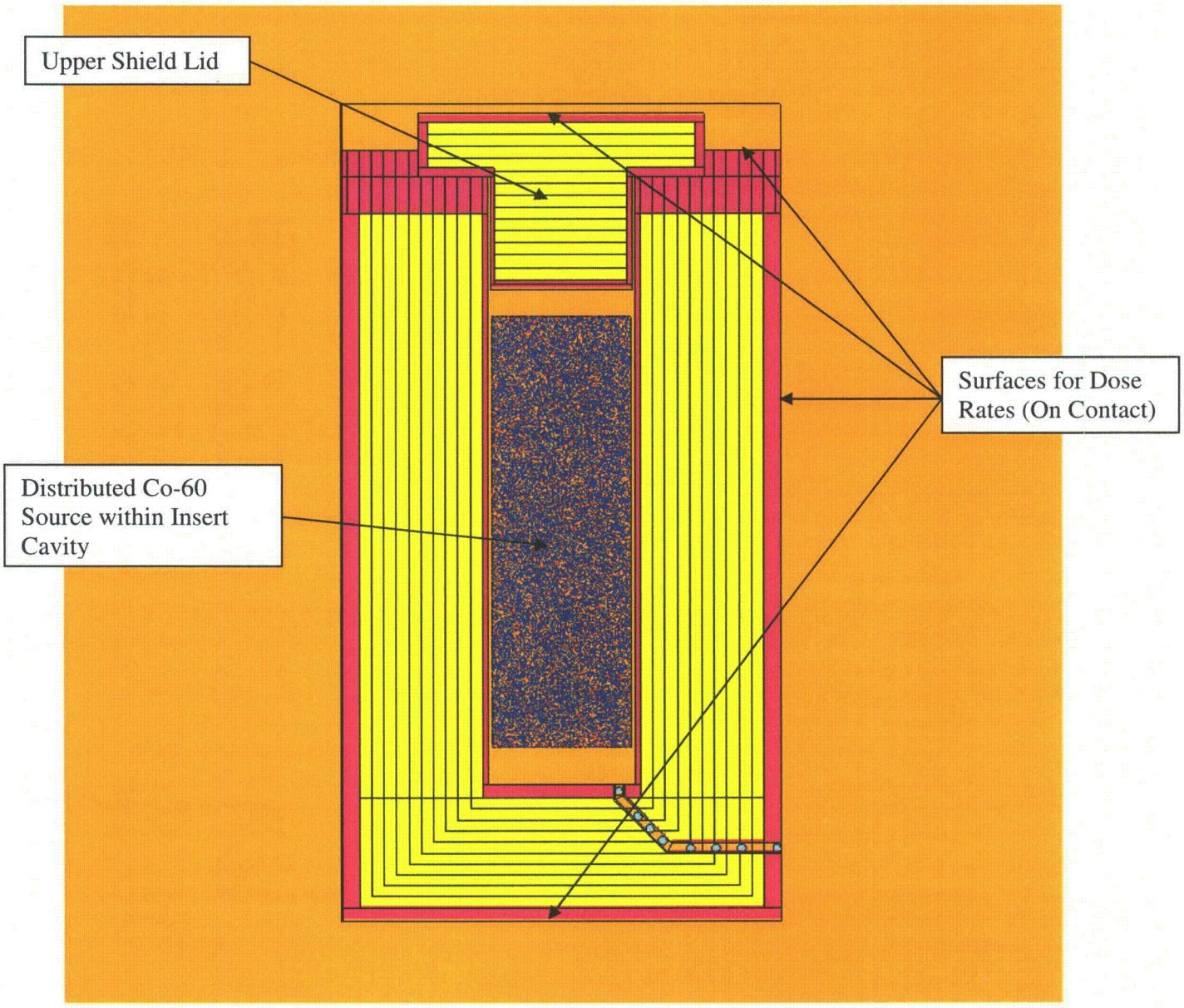

Figure 5-6. Expanded Elevation View of Insert Drain Line Region

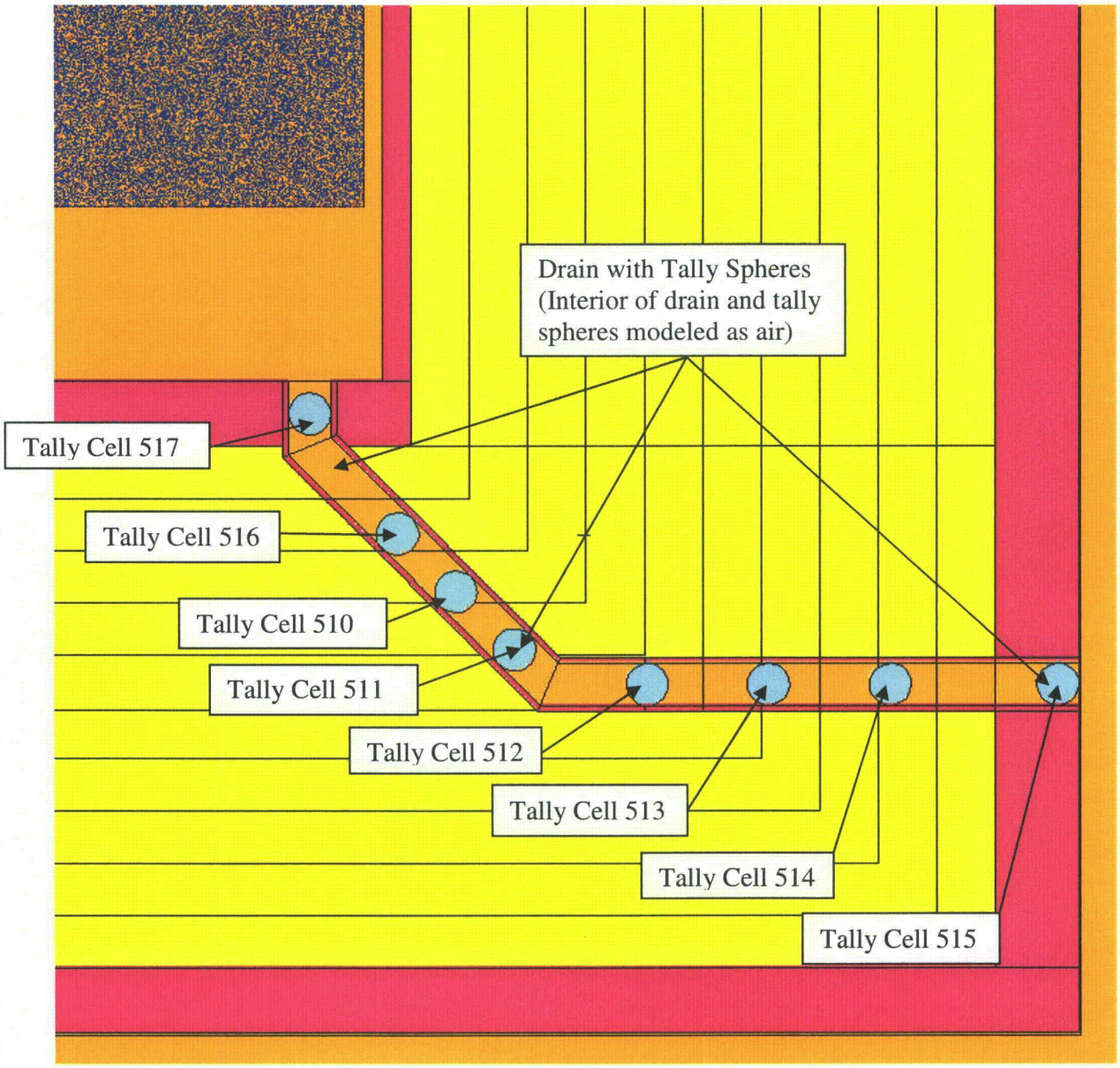

5.3.1.2 NCT Model of Cask and Insert

Figure 5-7 shows the NCT model of the Cask containing the Insert and the associated Co-60 source. The Insert portion of the model is identical to Figure 5-5 above, and is centered in the Cask volume where it will be retained by the wood shoring. The wood shoring is not included in the model to conservatively eliminate the small amount of added internal shielding that the shoring would provide.

Figure 5-7. Elevation View of NCT Model for 10-160B Cask and Centered Source Insert

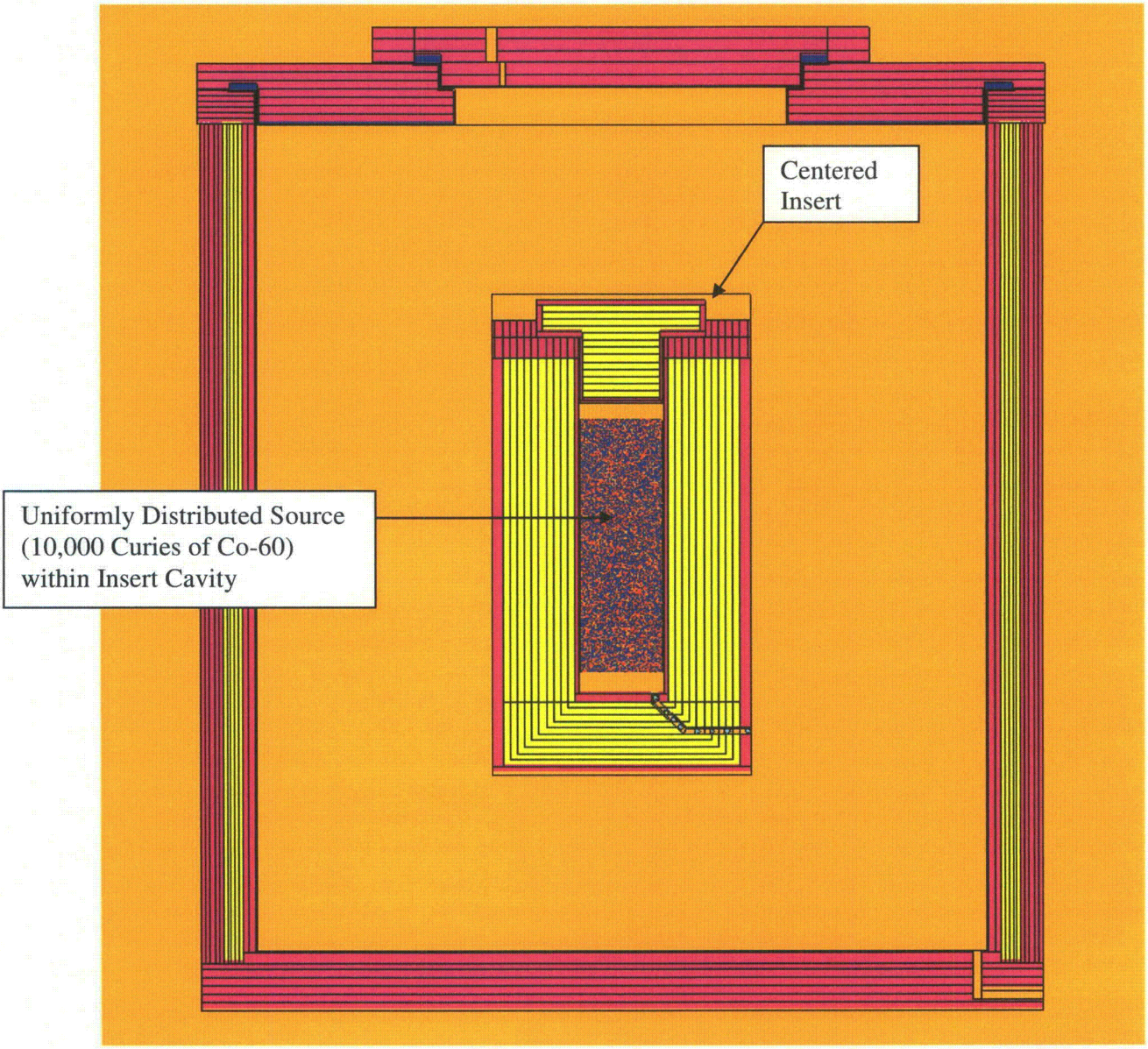

5.3.1.3 HAC Model of Cask and Insert

Figures 5-8 through 5-11 show the four HAC models, labeled as HAC Cases #1 through #4. These four HAC configurations were selected for evaluation as the bounding geometries for maximum HAC dose rates at +1 m from the Cask sidewall, top, and bottom.

Note that for all HAC cases, the Co-60 source term is modeled as a 1-cm sphere positioned against the interior side of the Insert closest to the associated Cask exterior surface. The 1-cm sphere is essentially a point source, which models an extreme collapse of the Co-60 pins and conservatively maximizes the resulting HAC dose rates. As noted in Section 2.7.1.1.3, there is little if any lead slump in the insert, so no lead slump is modeled.

Figure 5-8. Elevation View of 10-160B Cask with Source Insert Vertical Against Cask Interior Sidewall (HAC Case #1)

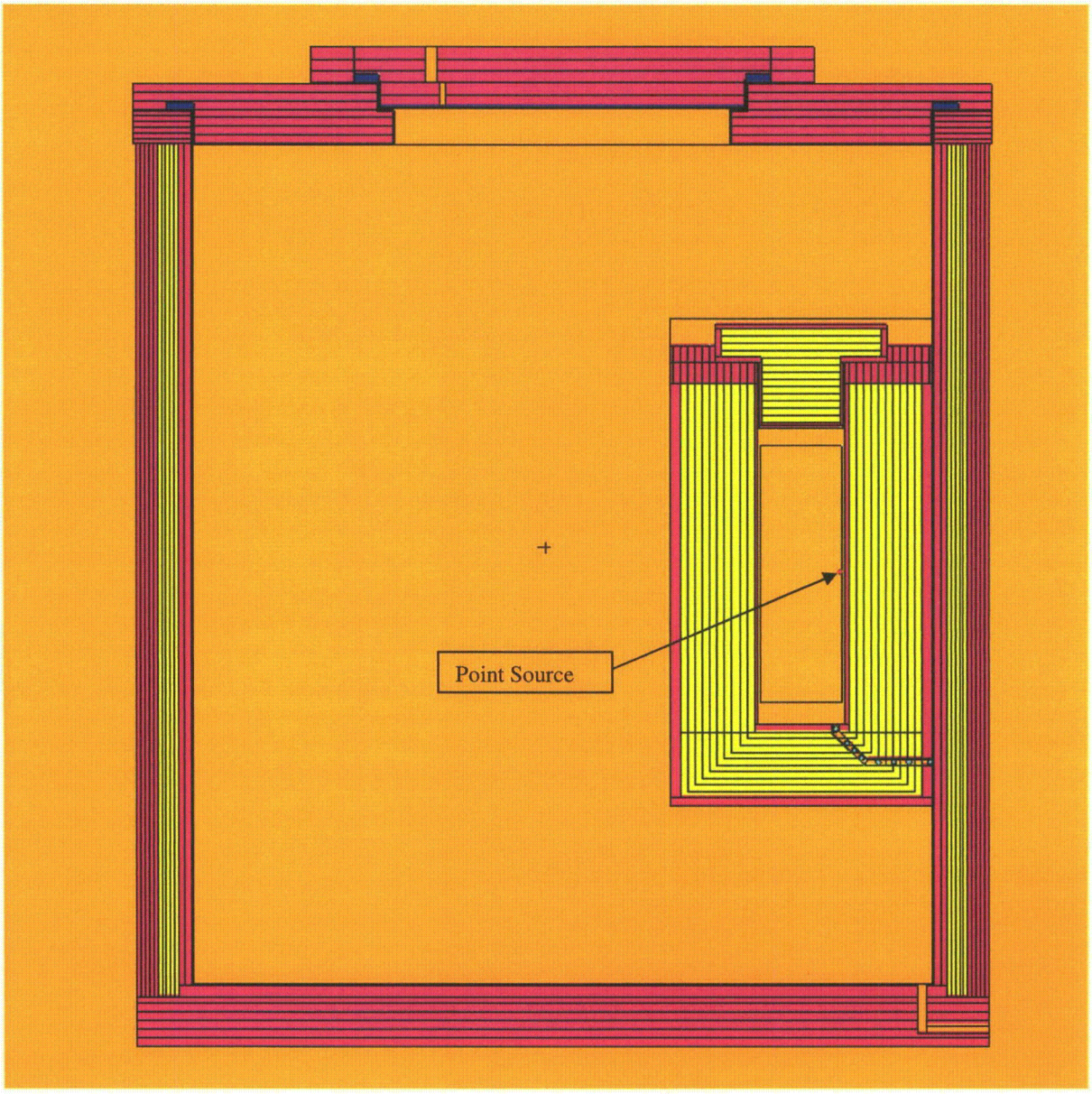

Figure 5-9. Elevation View of 10-160B Cask with Source Insert Rotated 90 Degrees Against Base of Cask Interior (HAC Case #2)

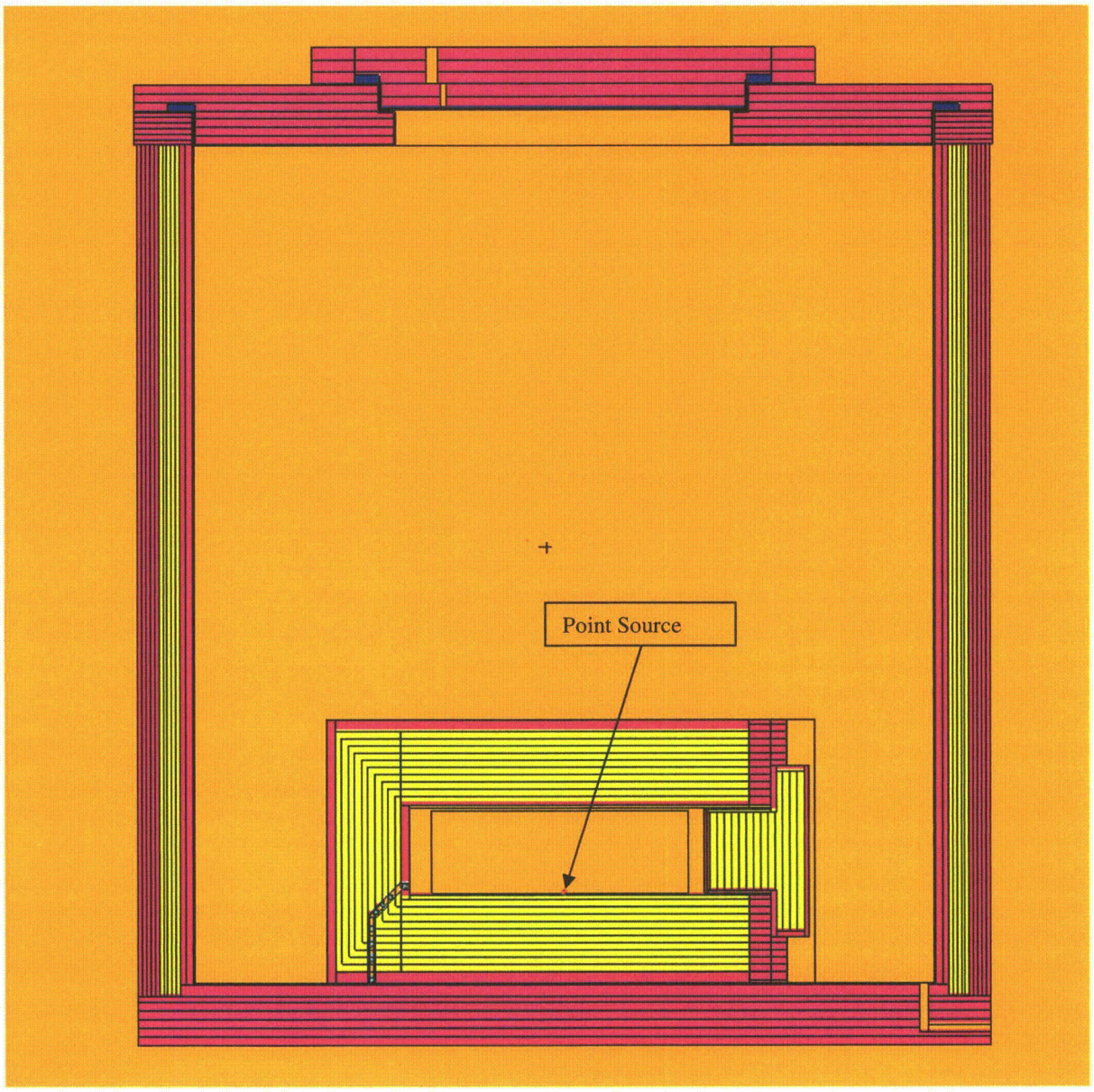

Figure 5-10. Elevation View of 10-160B Cask with Source Insert Rotated 90 Degrees Against Top of Cask Interior (HAC Case #3)

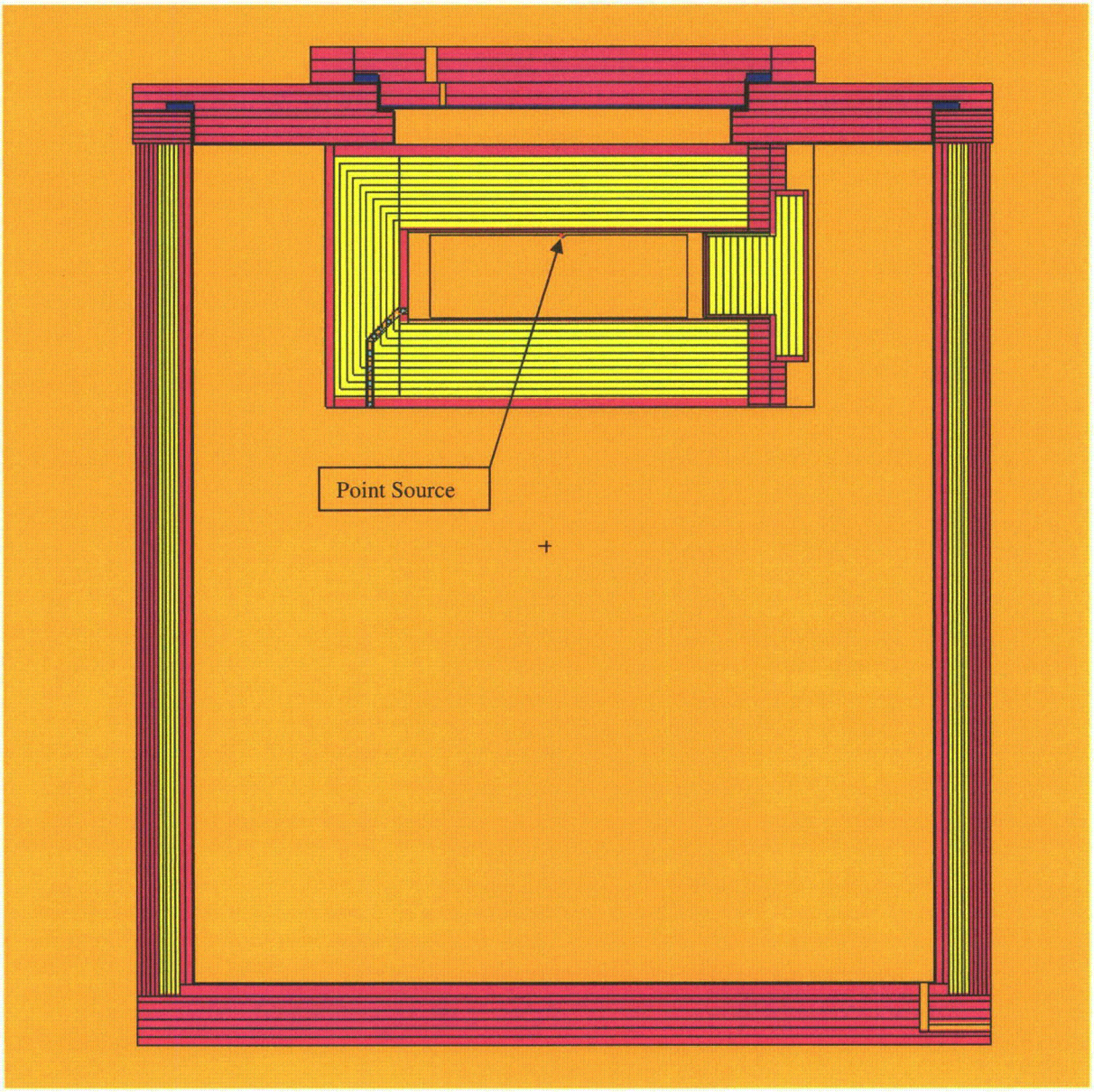

Figure 5-11. Elevation View of 10-160B Cask with Source Insert Rotated 180 Degrees (Inverted) Against Top of Cask Interior (HAC Case #4)

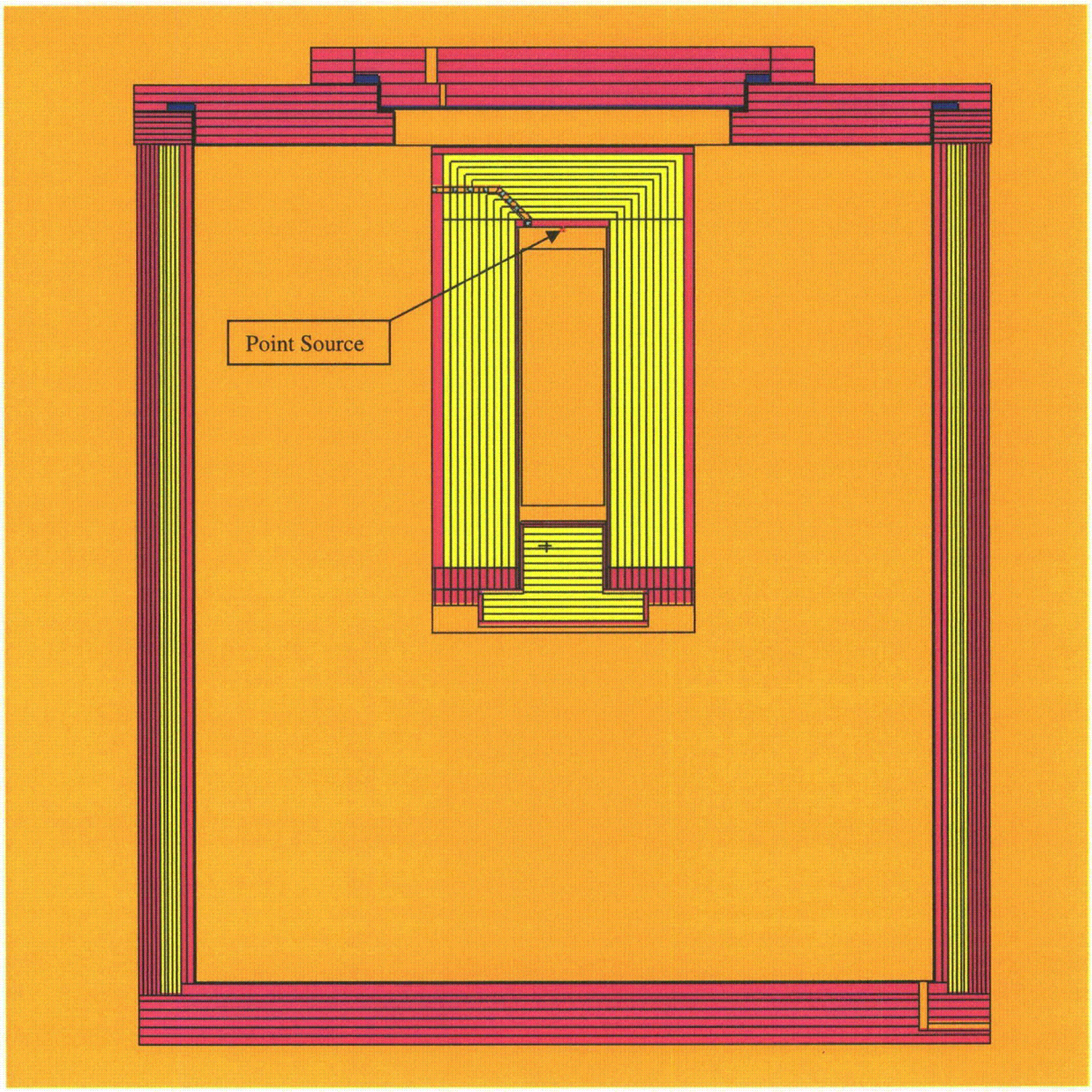

5.3.2 Material Properties

The material descriptions, density elemental compositions, nuclide identification number or ZAID, and mass fractions and used for the shielding were obtained from References 1 through 5, as noted in Table 5-6. Note that the specified lead alloy composition (L51121, commercial grade

lead) was derived from Reference 4 assuming all impurities at maximum values and minimum lead content.

The form of the ZAID is ZZZAAA.nnX where ZZZ is the atomic number of the element or nuclide, AAA is always 000 for photo-atomic data, nn is the unique cross-section table identification number, and X is set to p for continuous-energy. For the subject calculations, the ".04p" data sets were used.

Table 5-6. Material Compositions and Densities

Material	Density (g/cm^3)	Isotope	ZAID	Mass Fraction
Carbon Steel (ASTM A516 Gr. 70) (Ref.1)	7.82	C	6000	0.002800
		Si	14000	0.002900
		P	15000	0.000350
		S	16000	0.000400
		Mn	25000	0.010450
		Fe	26000	0.983100
		Total		1.000000
Air (Ref. 2)	0.001205	C	6000	0.000124
		N	7000	0.755268
		O	8000	0.231781
		Ar	18000	0.012827
		Total		1.000000
Stainless Steel (ASTM-A240 Type 304) (Ref. 3)	7.92	C	6000	0.000300
		N	7000	0.001000
		Si	14000	0.007500
		P	15000	0.000500
		S	16000	0.000300
		Cr	24000	0.190000
		Mn	25000	0.020000
		Fe	26000	0.680400
		Ni	28000	0.100000
		Total		1.000000
Lead (Commercial Grade per ASTM B29-03, UNS # L51121, with impurities at maximum values, and minimum lead content) (Ref. 4)	11.30	Fe	26000	0.000020
		Ni	28000	0.000020
		Cu	29000	0.000800
		Zn	30000	0.000010
		As	33000	0.000010
		Ag	47000	0.000200
		Sn	50000	0.000010
		Sb	51000	0.000010
		Pb	82000	0.998670
		Bi	83000	0.000250
		Total		1.000000

Material	Density (g/cm^3)	Isotope	ZAID	Mass Fraction
Soil (Ref. 5)	1.67	H	1000	0.001220
		O	8000	0.454275
		Na	11000	0.017582
		Mg	12000	0.027318
		Al	13000	0.072401
		Si	14000	0.241898
		P	15000	0.002095
		K	19000	0.010045
		Ca	20000	0.062321
		Ti	22000	0.014384
		Mn	25000	0.001549
		Fe	26000	0.094912
		Total		1.000000

5.4 Shielding Evaluation

5.4.1 Methods

The calculation methodology consists of the following steps:

1) Determine the source activity for 10,000 Curies of Co-60.

2) Determine geometric configuration conditions for both NCT and HAC.

3) Model the NCT and HAC configurations using component and assembly dimensions using the input data given above. Model sufficient component details and photon tally (dose rate) locations to determine the maximum dose rates on the package surfaces and at distances of 1 m (for HAC) and 2 m (for NCT exclusive use) from the package surfaces.

4) Model the drain line and cell tallies in a stand-alone Insert to determine the impact the line will have on reduced shielding (streaming analysis).

5.4.2 Software and Computer Quality Assurance

The Monte-Carlo N-Particle Version 5 (MCNP5) Release 1.51 (Reference 6) computer program were used to perform the analyses documented in this report. The electronic input files associated with the MCNP5 analyses are summarized in Appendix Section 5.5.2.

MCNP5 is a general-purpose, continuous energy, generalized-geometry, time-dependent, coupled neutron/photon/electron Monte Carlo transport code. MCNP5 has been validated and verified for correct installation and functionality in accordance with Reference 8, and approved for use with quality affecting analyses in accordance with Reference 9. The MCNP5 analyses documented in this report were performed on EnergySolutions Engineering and Technology (E&T) Compute Cluster consisting of four Dell Precision T5400 computers. Each computer is

identical with dual quad-core Xenon 2.67 GHz processors, 4 GB of RAM, and Microsoft® Windows® XP Professional x64 Edition.

5.4.3 Input and Output Data

The MCNP input and output files are provided separately from this evaluation on a CD-ROM to avoid a lengthy appendix and to prevent unauthorized access to potentially sensitive computer software. Appendix Section 5.5.2 lists the MCNP input files and the models with which they are associated.

5.4.4 Flux-to-Dose Rate Conversion

User input response functions are required by MCNP to convert photon flux to dose rates. Photon flux-to-dose rate conversion coefficients derived from ANSI/ANS-6.1.1-1977 (Reference 7) were used for this analysis. Table 5-7 summarizes the photon flux-to-dose rate conversion coefficients versus energy.

Table 5-7. Photon Dose Rate Response Functions from ANSI/ANS-6.1.1-1977

Energy [MeV]	Response [mrem/h]/[γ/cm^2-sec]	Energy [MeV]	Response [mrem/h]/[γ/cm^2-sec]
1.00E-02	3.96E-03	1.40E+00	2.51E-03
3.00E-02	5.82E-04	1.80E+00	2.99E-03
5.00E-02	2.90E-04	2.20E+00	3.42E-03
7.00E-02	2.58E-04	2.60E+00	3.82E-03
1.00E-01	2.83E-04	2.80E+00	4.01E-03
1.50E-01	3.79E-04	3.25E+00	4.41E-03
2.00E-01	5.01E-04	3.75E+00	4.83E-03
2.50E-01	6.31E-04	4.25E+00	5.23E-03
3.00E-01	7.59E-04	4.75E+00	5.60E-03
3.50E-01	8.78E-04	5.00E+00	5.80E-03
4.00E-01	9.85E-04	5.25E+00	6.01E-03
4.50E-01	1.08E-03	5.75E+00	6.37E-03
5.00E-01	1.17E-03	6.25E+00	6.74E-03
5.50E-01	1.27E-03	6.75E+00	7.11E-03
6.00E-01	1.36E-03	7.50E+00	7.66E-03
6.50E-01	1.44E-03	9.00E+00	8.77E-03
7.00E-01	1.52E-03	1.10E+01	1.03E-02
8.00E-01	1.68E-03	1.30E+01	1.18E-02
1.00E+00	1.98E-03	1.50E+01	1.33E-02

5.4.5 External Radiation Levels

5.4.5.1 Standalone Insert Shielding Results

Table 5-8 presents the peak dose rates and their locations for the standalone Insert. All dose rates are less than the maximum contractual value of 5 rem/hr (5,000 mrem/hr).

Table 5-8. Peak Dose Rates for Standalone Source Insert

Location of Dose Point	On Contact Peak Dose Rate, mrem/hr (%Relative Error)
Sidewall (Outer Radius)	1,250 (0.7)
Top (Upper Surface of Secondary Lid)	2,540 (2.5)
Top (Upper Surface of Primary Lid)	2,716 (6.3)
Bottom (Lower Outside Surface of Base)	4,260 (1.5)

5.4.5.2 NCT Results

Table 5-9 presents the peak dose rates for NCT, given a Cask with a centered Insert. Note that the maximum dose rate at 2 m from the Cask is less than 2 mrem/hr. Therefore, under normal conditions, the dose rate in any normally occupied space (i.e. driver location) is less than the allowable limit of 2.0 mrem/hr. This demonstrates compliance with 10 CFR 71.47, part (b).

Table 5-9. Peak NCT Dose Rates for 10-160B Cask with Centered Source Insert

Location of Dose Points	Dose Contributor	Peak Dose Rate[4] mrem/hr (%Relative Error)	
		On Contact	+2m
Sidewall (Outer Radius)	Gamma from the Decay of Co-60	0.8 (0.7)	0.1 (2.9)
	LIMIT	200	10
Top (Upper Surface of Secondary Lid)	Gamma from the Decay of Co-60	2.9 (1.3)	0.2 (2.2)
	LIMIT	200	10
Bottom (Lower Outside Surface of Base)	Gamma from the Decay of Co-60	6.5 (0.4)	NA[1]
	LIMIT	200	10

[1]The Cask is assumed centered on a 8-foot wide conveyance with the outer surface of the Cask approximately 40-inches (101.6 cm) above ground level. A dose rate +2m from the base is not available.

5.4.5.3 HAC Results

From Table 5-10, the peak dose rates for HAC given a Cask with a Insert at various locations are 27.8 mrem/hr on contact with the sidewall (outer radius), 44.5 mrem/hr on contact with the upper shield, and 27.5 mrem/hr on contact with the base. The peak dose rate at +1 m from any surface is 3.1 mrem/hr, which is considerably less than the allowable HAC limit of 1000 mrem/hr given in 10 CFR 71.51.

Table 5-10. Peak HAC Dose Rates for 10-160B Cask with Source Insert at Various Locations

Case Description	Location of Dose Point	Peak Dose Rate, mrem/hr (% Relative Error)	
		On Contact	+1m
HAC Case #1 - Source Insert at Sidewall	Outer Radius of Sidewall	10.2 (0.2)	0.5 (0.5)
	Upper Surface of Lid	10.9 (0.6)	1.3 (1.3)
	Lower Surface of Base	6.0 (0.4)	0.8 (0.5)
	LIMIT		1000
HAC Case #2 - Source Insert at Bottom	Outer Radius of Sidewall	27.8 (0.4)	3.1 (0.6)
	Upper Surface of Lid	1.1(1.3)	0.3 (2.6)
	Lower Surface of Base	27.5 (0.1)	1.2 (0.3)
	LIMIT		1000
HAC Case #3 - Source Insert at Top	Outer Radius of Sidewall	16.2 (0.5)	2.2 (0.7)
	Upper Surface of Lid	18.3 (0.2)	1.0 (0.3)
	Lower Surface of Base	0.9 (0.7)	0.3 (0.5)
	LIMIT		1000
HAC Case #4 Source Insert at Top (Inverted)	Outer Radius of Sidewall	1.3 (0.6)	0.2 (1.0)
	Upper Surface of Lid	44.5 (0.1)	2.0 (0.2)
	Lower Surface of Base	0.8 (2.3)	0.2 (2.2)
	LIMIT		1000

5.4.5.4 Insert Drain Line Streaming Analysis

Additional efforts were made to ensure the Insert drain line was adequately designed and would not adversely impact external radiation levels. As shown in Figures 5-5 and 5-6, the drain line was explicitly modeled as a series of vertical, 45-degree, and horizontal cylindrical segments that penetrate the gamma shield and encasing steel. The results presented in Tables 5-8 through 5-10 above include the effect of the drain line.

As shown in Figure 5-6, additional Type 4 cell tallies were modeled as spheres inside and along the drain line to determine the dose rate caused by the penetration through the shielding.

The dose rates presented in Table 5-11 show the dose rates along the drain line as it penetrates the Insert's lead shielding given an uniformly distributed source (NCT Case #1). Tally cells 517, 516, 510 and 511 are located within the 45-dgree segment, with tally cell 517 at the inlet to the drain line. Tally cells 512, 513, 514, and 515 are located within the straight segment, with

tally cell 515 at the discharge of the drain line. See Figure 5-6 for an expanded view of the tally cell locations.

The peak dose rate decreases significantly at the discharge. At the Insert's outside surface, the peak dose rate is approximately 1,058 mrem/hr. This value is less than the peak dose rate of 1,250 mrem/hr (see Table 5-8) on contact with the outer radius at a higher elevation on the side of the Insert. Based on this comparison, the drain line was adequately designed and does not adversely impact external radiation levels.

Table 5-11. Drain Line Dose Rates for Standalone Source Insert with Uniformly Distributed Source

Cell Tally #	Dose Rate, mrem/h (% Relative Error)
517	2.557E+08 (0.2)
516	4.898E+07 (0.4)
510	1.491E+07 (0.5)
511	5.184E+06 (0.9)
512	1.440E+05 (1.3)
513	1.943E+04 (2.4)
514	4.218E+03 (4.5)
515	1.058E+03 (10.4)

5.5 Appendix

5.5.1 References

1. ASTM A516, 2010, "Standard Specification for Pressure Vessel Plates, Carbon Steel, for Moderate and Lower Temperature Service," American Society for Testing and Materials.

2. PNNL-15870, April 2006, "Compendium of Material Composition Data for Radiation Transport Modeling," R. G. Williams, C. J. Gesh and R. T. Pagh, Pacific Northwest National Laboratory, Richland, Washington.

3. ASTM A240, 2011, Rev A, "Standard Specification for Chromium and Chromium Nickel Stainless Steel Plate, Sheet, and Strip for Pressure Vessels and for General Applications," American Society for Testing and Materials.

4. ASTM B29, 2003, "Refined Specification for Lead," American Society for Testing and Materials.

5. *Soil Density and Mass Attenuation Coefficients for Use in Shielding Calculations at the Hanford Waste Vitrification Plant, American Nuclear Society Transactions*, "Topical Meeting on New Horizons in Radiation Protection and Shielding," Pasco, Washington, April 26 - May 1, 1992, pages 144-148, published by American Nuclear Society, La Grange Park, Illinois.

6. MCNP5 – A General Monte Carlo N-Particle Transport Code, Version 5, LA-UR-03-1987, Los Alamos National Laboratory, April 2003.

7. ANSI/ANS-6.1.1-1977, American Nuclear Society, 1977, "Neutron and Gamma-Ray Flux-to-Dose-Rate Factors."

8. ENG-03.30, Rev. 2, "Installation, and Testing of Acquired Software," EnergySolutions, Engineering and Technology, Richland, WA.

9. CSU-ET-NS-0001, MCNP5 Computer Software Installation and In-Use Test Log, Energy*Solutions*.

10. C-110-D-29003-010, Rev. 14, Cask Assembly General Notes/Parts List for 10-160B, Energy*Solutions*.

11. C-038-145083-001, Rev. 0, Gamma Shield Insert, Energy*Solutions*.

5.5.2 Electronic Files

Software	Input File Name	File Description	File Date
MCNP5	Insert1b3.1	Standalone Source Insert (Includes Insert drain line streaming tallies)	08/17/2011
MCNP5	NCT1b3.i	10-160B Cask with Source Insert centered in Cask interior volume	08/19/2011
MCNP5	HAC1b3.i	10-160B Cask with Source Insert vertical against Cask interior sidewall (HAC Case #1)	08/19/2011
MCNP5	HAC2b3.i	10-160B Cask with Source Insert rotated 90 degrees against base of Cask interior (HAC Case #2)	08/20/2011
MCNP5	HAC3b3.i	10-160B Cask with Source Insert rotated 90 degrees against top of Cask interior (HAC Case #3)	08/21/2011
MCNP5	HAC4b3.i	10-160B Cask with Source Insert rotated 180 degrees (inverted) against top of Cask interior (HAC Case #4)	08/22/2011

6.0 CRITICALITY

There is no fissile material in the contents addressed by this addendum. Thus, a criticality evaluation is not applicable.

7.0 OPERATING PROCEDURE

Chapter 7 of the SAR describes the general procedure for loading and unloading of the 10-160B cask. Use of the Source Insert requires no change to the SAR procedure. The procedure listed below is for loading the Insert. The loaded Insert will be loaded into the cask and unloaded from the cask per Chapter 7 of the base SAR. The Source Insert will not be unloaded.

7.1 Procedure for Loading the Source Insert

NOTE CONFIRM THE SOURCES TO BE LOADED MEET THE LIMITATIONS SPECIFIED IN THE COC.

NOTE CONFIRM THE SHORING TO BE USED MEETS THE REQUIREMENTS OF THE COC.

7.1.1 Loosen and remove the eight (8) ¾-inch bolts which secure the Source Insert lid to the insert body.

7.1.2 Remove the Source Insert lid using the four lifting lugs on the lid. Inspect the gasket for damage and confirm gasket position is in accordance with Drawing C-038-145082-004. Care should be taken during lid handling operations to prevent damage.

7.1.3 Visually inspect accessible areas of the shield cavity for damage, loose materials, or moisture and repair/remove as necessary.

7.1.4 Place sources into cavity.

7.1.5 Replace the Source Insert lid.

7.1.6 Assure bolt threads are adequately lubricated and secure the Source Insert lid by installing the eight (8) ¾-inch lid bolts. Torque the bolts to 75 ± 10 ft-lbs using a star pattern.

7.1.7 If the insert is loaded underwater:

- 7.1.7.1 drain water from the insert cavity
- 7.1.7.2 vacuum dry the cavity (hold cavity pressure at or below 1 torr for 30 minutes)
- 7.1.7.3 close the vent and drain ports

8.0 ACCEPTANCE TESTS AND MAINTENANCE

There are no changes to the acceptance test or maintenance instruction found in Chapter 8 of the SAR for the 10-160B cask. The acceptance tests and maintenance for the Source Insert are given below.

8.1 Acceptance Test

Prior to the first use of the Source Insert, the following tests and evaluations will be performed:

8.1.1 Visual Examination

The container will be examined visually for any adverse conditions in materials or fabrication.

All ferromagnetic material welds are inspected per ASME Code, Section III, Div. I, Subsection NF, NF-5230 for Class 3 support attachments, and Section V Article 7 for magnetic particle (MT) examinations, and Section V Article 6 for liquid penetrant (PT) examinations. Acceptance standards are per ASME Section III, Div. I, Subsection NF, NF-5340 and NF-5350, as appropriate.

Welds on lifting lugs are inspected before and after 150% load test in accordance with the ASME Code requirements for MT examination as specified above.

8.1.2 Structural Tests

Lifting attachments (Lift Lugs) and load carrying components (Lid Fasteners) will be tested equal to 150% of maximum service load.

8.1.3 Leak Tests

No leak tests will be performed on the Source Insert.

8.1.4 Component Tests

The Source Insert will be subjected to Load Testing and Shielding Integrity Testing.

8.1.5 Test for Shielding Integrity

Shielding integrity of the Source Insert will be verified by gamma scan to assure package is free of stream paths in the shield. All gamma scanning will be performed on a 4-inch square or less grid system. The acceptance criteria will be that voids resulting in shield loss in excess of 10% of the normal lead thickness in the direction measured shall not be acceptable.

8.1.6 Thermal Acceptance Tests

No thermal acceptance testing will be performed on the Source Insert.

8.1.7 Impact Limiter Foam

There is no foam in the Source Insert.

8.1.8 Pressure Test

No pressure testing will be performed on the Source Insert.

8.2 Maintenance Program

The Source Insert is a single use container. There are no routine or periodic maintenance activities.