KEY NO.: E

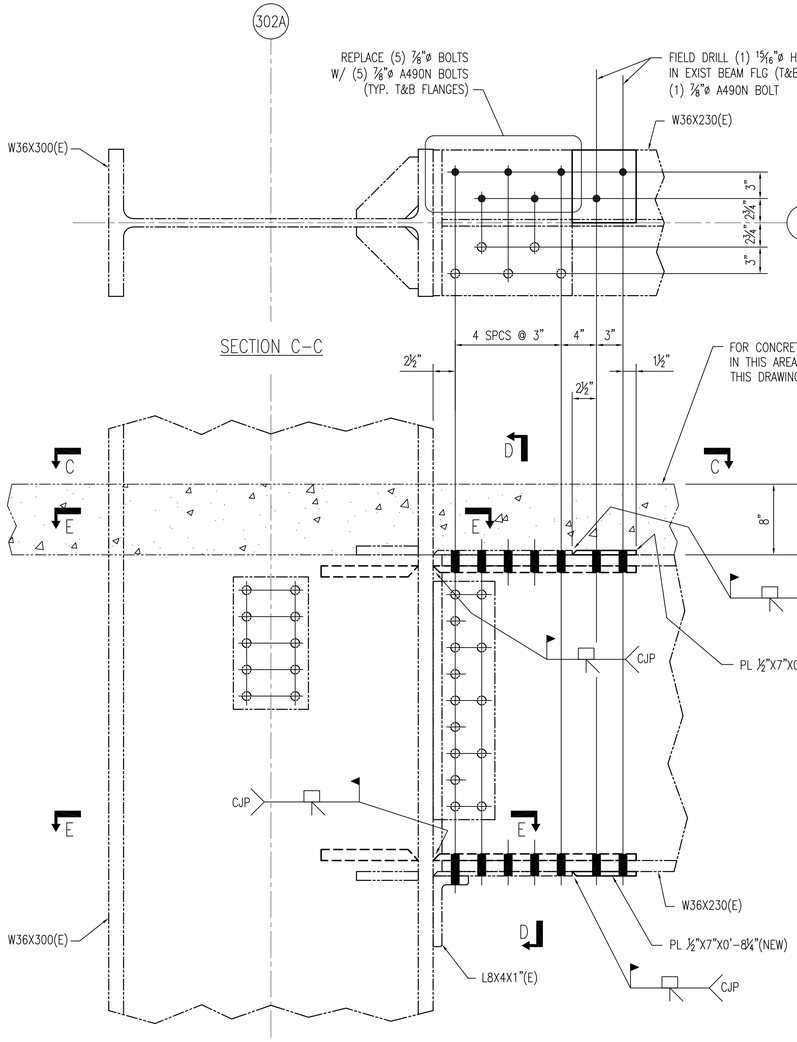

SECTION A-A
SCALE: 1½"=1'-0"
DWG. 522-041-010

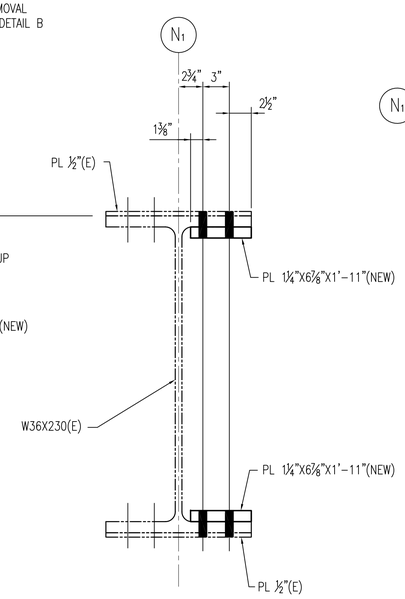

SECTION D-D

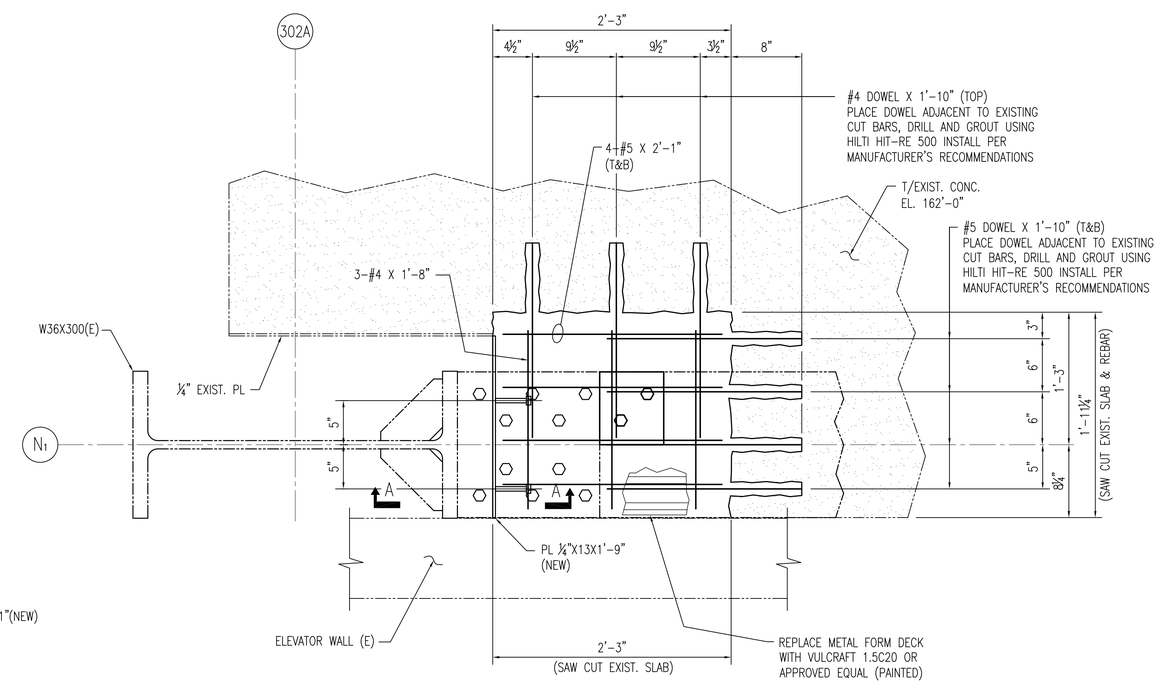

DETAIL B
SCALE: 1½"=1'-0"

NOTE:
REPLACE CONCRETE SLAB WITH 4000PSI CONCRETE. FINISH TO MATCH EXISTING.

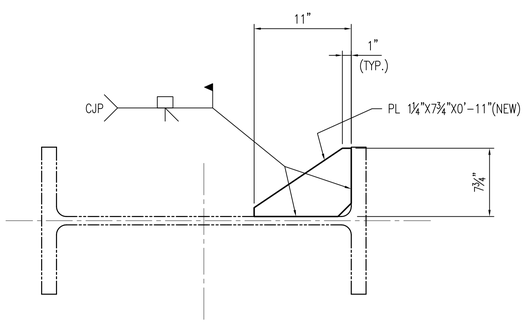

SECTION E-E

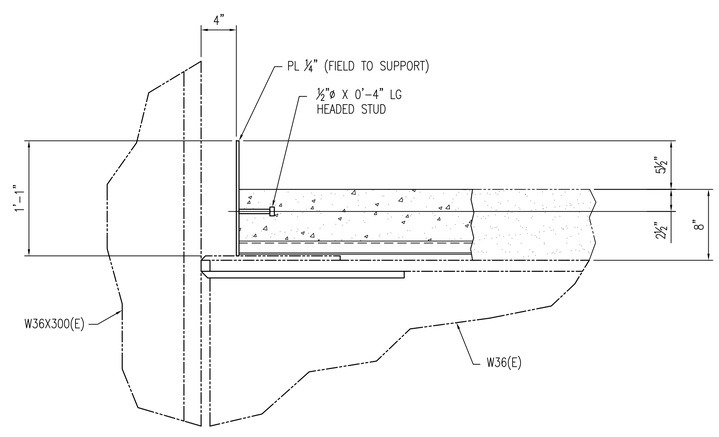

SECTION A-A
SCALE: 1½"=1'-0"

NOTES:
1. FOR GENERAL NOTES SEE DWG. 522-041-001.

REFERENCES:
522-041-010

EC70139 REV. 0
ATTACHMENT Z121R0
DWG. NO. 522-041-023

0' 1'
GRAPHIC SCALE

NO.	DESCRIPTION	DRAWN

REVISIONS

Progress Energy

NUCLEAR ENGINEERING

CRYSTAL RIVER UNIT 3

AUXILIARY BUILDING – SOUTH STEEL FRAMING MODIFICATIONS DETAILS

EWN	MPB	X	12/9/10	NONE
DRAWN	CHKD.	APRVD.	DATE	SCALE
C	023		522-041	0
DISCP.	SHEET	DWG.		REV.

FILE: