KEY NO.: E

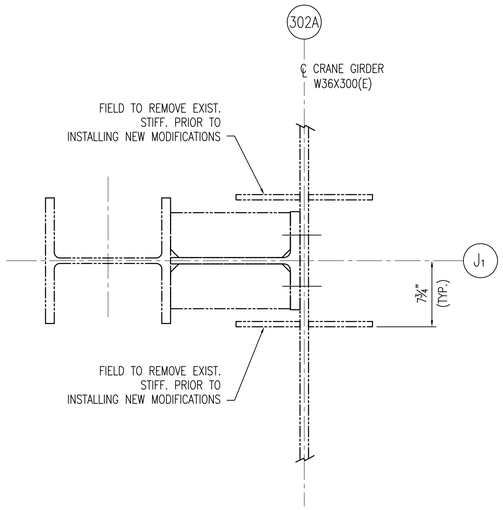

SECTION A–A
SCALE: 1½"=1'–0"
DWG. 521–142–005

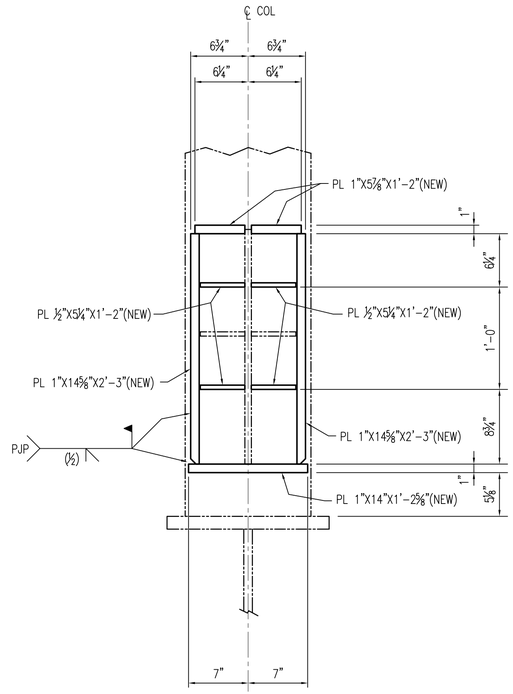

SECTION B–B
SCALE: 1½"=1'–0"
DWG. 521–142–005

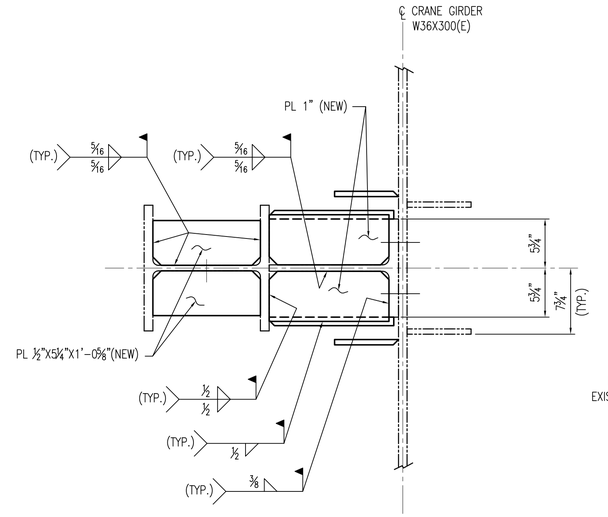

SECTION C–C
SCALE: 1½"=1'–0"
DWG. 521–142–005

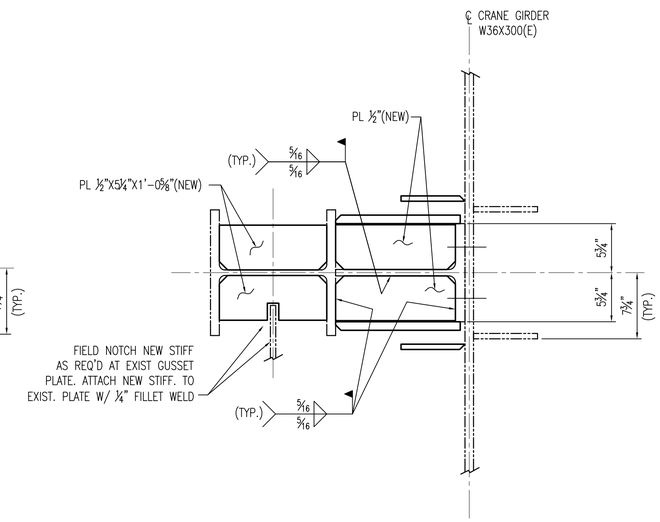

SECTION D–D
SCALE: 1½"=1'–0"
DWG. 521–142–005

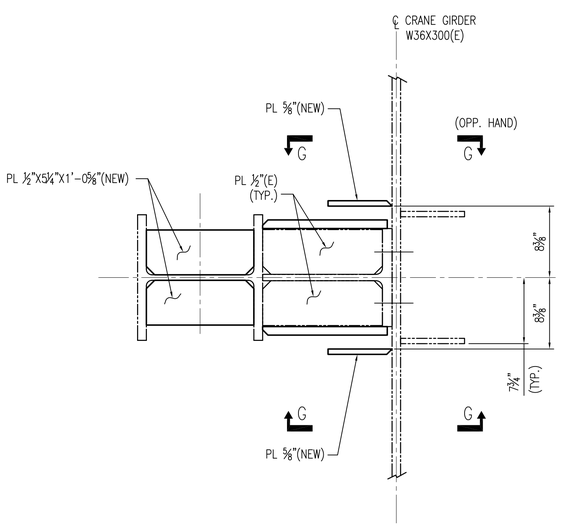

SECTION E–E
SCALE: 1½"=1'–0"
DWG. 521–142–005

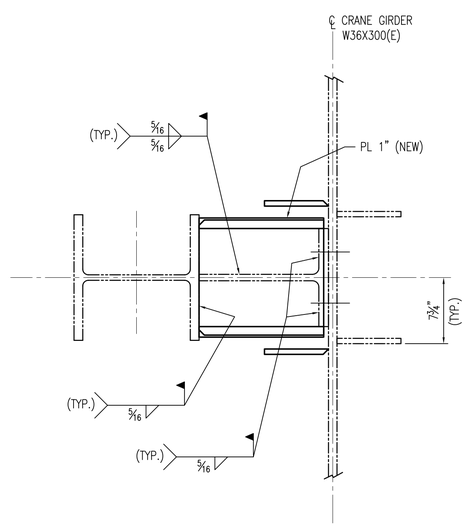

SECTION F–F
SCALE: 1½"=1'–0"
DWG. 521–142–005

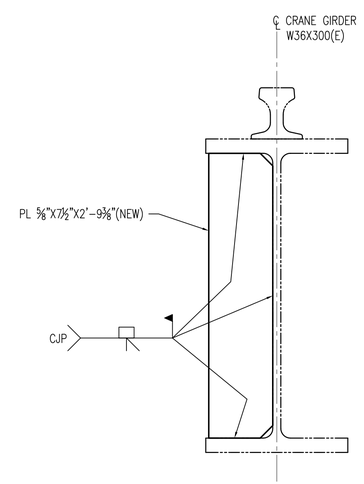

SECTION G–G
SCALE: 1½"=1'–0"

NOTES:
1. FOR GENERAL NOTES SEE DWG. 522–041–001.

REFERENCES:
521–142–005

EC70139 REV. 0
ATTACHMENT Z118R0
DWG. NO. 521–142–006

0" 1'
GRAPHIC SCALE

NO.	DESCRIPTION	DRAWN

REVISIONS

Progress Energy

NUCLEAR ENGINEERING

CRYSTAL RIVER
UNIT 3

AUXILIARY BUILDING – NORTH STEEL
FRAMING MODIFICATIONS
DETAILS

EWN	JGC	X	1/6/11	NONE
DRAWN	CHKD.	APRVD.	DATE	SCALE

C	006	521–142	0
DISCP.	SHEET	DWG.	REV.

FILE: