E Notification Methods and Procedures

This section of the Plan describes the methods and procedures that are established for notification by the Station, to Federal, State and County response organizations and for activation of the Station Emergency Response Organization.

E.1 Offsite Agency Notifications

The content of initial and follow-up messages to offsite response organizations is coordinated with State and County by Station Representatives. The forms for messages sent from the Station to offsite agencies are contained in the Emergency Response Procedure 0ERP01-ZV-IN02, Notifications to Offsite Agencies, the State of Texas Emergency Management Plan, and the Matagorda County Emergency Management Plan. More information on notification procedures is provided in Emergency Response Procedure 0ERP01-ZV-IN02, Notifications to Offsite Agencies. Plant Operations Procedure 0POP04-ZO-0004, Personnel Emergencies defines the communication links with offsite medical facilities.

E.2 Communication Links and Notifications

The Station has established communication links among the Station emergency response facilities and the Federal, State, and County emergency response organizations. The notification of response organizations is based on the response criteria developed for each emergency classification as discussed in Section D. The process for contacting Station Emergency Response Organization personnel contacted for each emergency classification is provided in Emergency Response Procedure 0ERP01-ZV-IN03, Emergency Response Organization Notification. Addendum E-1 shows the various communication links and the redundant communication equipment available to assure that communication channels are maintained. Emergency Response Facility telephone numbers are maintained in the Emergency Communications Directory. A description of the communications equipment is provided in Addendum E-1.

Initial notification is made simultaneously to the State and County via the Department of Public Safety Disaster District Office in Pierce, Texas and the Matagorda County Sheriff's Office within fifteen minutes of the declaration of the emergency classification by the Emergency Director. This notification is made via dedicated automatic ringdown lines that connect to the Matagorda County Sheriff's Office and Department of Public Safety in Pierce, Texas. The Nuclear Regulatory Commission is notified as soon as possible following notification of State and County agencies of the declared event, not to exceed one hour. The affected Unit shall activate the Emergency Response Data System for any condition that requires the declaration of an Alert, Site Area Emergency, or General Emergency at the time the NRC Operations Center is notified of the emergency classification.

If a declared event is based on a fire, security, or radiological initiating condition, then appropriate Station emergency responders, and appropriate local support services will be notified. Local support services include those organizations listed in Section B of this Plan. These local services will activate other services in their individual areas if additional support is required.

E.2.1 Unusual Event

For an Unusual Event, emergency classification, the Shift Supervisor serving as Emergency Director, will initiate notifications in accordance with Emergency Response Procedure 0ERP01-ZV-IN02, Notifications to Offsite Agencies, and 0ERP01-ZV-IN03, Emergency Response Organization Notification. These procedures are prepared to meet the requirements of Code of Federal Regulations, Title 10, Part 20.2202 or 50.72.

E.2.2 Alert

For an Alert emergency classification, the Emergency Director will initiate notifications in accordance with Emergency Response Procedure 0ERP01-ZV-IN02, Notifications to Offsite Agencies, and augment the onshift duty complement using 0ERP01-ZV-IN03, Emergency Response Organization Notification. The Station Emergency Response Organization will be notified and requested to report to their respective Emergency Response Facilities. The Operations Support Center and the Technical Support Center will be activated. The Emergency Operations Facility and Joint Information Center are staffed as a precautionary action, and may be activated at the discretion of the Emergency Director. Dose projection capability is provided in the Emergency Operations Facility at an Alert. Personnel in the Emergency Operations Facility act in a support role to the Technical Support Center. The purpose of this emergency classification is to provide early and prompt notification of minor events which could lead to more serious consequences given operator error or equipment failure, or which may be indicative of more serious conditions that are not yet fully realized.

E.2.3 Site Area Emergency

For a Site Area Emergency classification, the Emergency Director will initiate notifications in accordance with Emergency Response Procedure 0ERP01-ZV-IN02, Notifications to Offsite Agencies, and augment the activated ERO staff utilizing 0ERP01-ZV-IN03, Emergency Response Organization Notification. Members of the Station Emergency Response Organization are notified and requested to report to their respective emergency response facilities which are activated at the Site Area Emergency. The emergency classification reflects conditions where full mobilization of emergency personnel is indicated, as well as, the dispatch of Offsite Field Teams with associated communications.

The Department of State Health Services, shall establish communications with the Matagorda County Emergency Management Organization, the Texas Department of Public Safety, the Governor's Division of Emergency Management, and the Station.

The Department of State Health Services, may activate its Radiological Response Organization and dispatch Radiological Response Teams to the site environs to perform radiological monitoring and environmental impact assessment. The Emergency Management Council is activated upon notification of the declared event by the Station. The Department of State Health Services may dispatch a mobile environmental analysis and sampling vehicle to the Staging Area at the Bay City Civic Center to assist the Radiological Response Teams.

E.2.4 General Emergency

For a General Emergency classification, the Emergency Director will initiate notifications in accordance with Emergency Response Procedure 0ERP01-ZV-IN02, Notifications to Offsite Agencies, and notify Emergency Response Organization personnel utilizing 0ERP01-ZV-IN03, Emergency Response Organization Notification. The entire Station Emergency Response Organization is notified and directed to report to their respective emergency response facilities. The emergency classification reflects conditions requiring immediate implementation of appropriate predetermined protective actions.

The Department of State Health Services, shall establish communications with the Matagorda County Emergency Management Organization, the Texas Department of Public Safety, the Governor's Division of Emergency Management, and the Station.

The Department of State Health Services, may activate its Radiological Response Organization and dispatch Radiological Response Teams to the site environs to perform radiological monitoring and environmental impact assessment. The Department of Public Safety may provide escort for the Department of State Health Services, Radiological Response Team personnel. The Emergency Management Council is activated upon notification of the declared event by the Station. The Department of State Health Services will dispatch a mobile environmental analysis and sampling vehicle to the Staging Area at the Bay City Civic Center to assist the Radiological Response Teams.

E.3 Notification of the General Public

The general public (resident and transient population) will be notified of an Unusual Event through press releases, radio broadcasts, and other news media. The general public will be notified of Alert or higher declarations through news advisories and/or Emergency Alert System messages prepared by Matagorda County Emergency Management officials. During emergencies that may require the implementation of protective actions, the general public will be alerted by the Prompt Notification System, which consists of alert radios, warning sirens, and news advisories and/or Emergency Alert System messages. This system is designed to enable the County authorities to notify essentially all of the population within the Emergency Planning Zone within about fifteen minutes.

Sirens are utilized to alert the more densely populated areas identified on Figure E-1. This system was designed considering the Federal Emergency Management Agency's Outdoor Warning System Guide (CPG-17), Federal Emergency Management Agency - Report-10, and the Nuclear Regulatory Commission's guidance presented in NUREG-0654/FEMA-REP-1, Rev. 1. All sirens have a single tone, two signal capability with a required signal duration of at least three minutes. The siren system is activated from the Matagorda County Sheriff's Office, or from the Station Emergency Operations Facility; individual sirens can be activated singularly at the individual siren location. The Station is responsible for the maintenance and routine testing of the siren system in accordance with NUREG 0654/Federal Emergency Management Agency Report-1 and the siren manufacturer's technical manual.

Deficiencies that are identified in the routine testing of the siren subsystem shall be corrected in an expedient manner not to exceed four months [10CFR50.54(s)(2)]. During this period of time, alternate notification methods shall be provided for residents within the siren's coverage, if the deficiency renders a siren out-of-service. This service is described in Matagorda County Emergency Management Plan Procedures.

The warning sirens and alert radios are activated by radio signal. The primary activation point is the Matagorda County Sheriff's Office. The sirens are activated by radio directly from the Sheriff's Office. The alert radios are activated by an Emergency Alert System signal from KMKS FM Radio Station in Bay City based on direction from Matagorda County Emergency Management officials. This service to the general public is provided 24 hours per day to accommodate day or night activation's. The secondary control point for the siren system is the Station Emergency Operations Facility. The siren system will be activated at the secondary control point only as directed by the Matagorda County Emergency Management officials and as approved by the Emergency Director.

Reasonable efforts shall be made to provide alert radios to residences within the ten mile emergency planning zone that are outside the effective coverage area of the siren system, as well as to major businesses, recreational areas and schools within the ten mile emergency planning zone. The alert radios are tested on a regular basis with activation of the test signal for the Emergency Alert System. Radios have a battery backup provision in the event of power failure. Instructions for use accompany the radio package. Maintenance and documentation is the responsibility of the Station.

The public receives instructions periodically that they are to tune to their local Emergency Alert System radio station, KMKS FM Radio, for emergency instructions whenever the sirens or alert radios are activated. The Emergency Alert Messages originate from Matagorda County officials.

E.4 Matagorda County Instructions to the Public

Matagorda County Emergency Management officials may use preformatted messages which give instructions to the public regarding specific protective actions to be taken by occupants of affected areas, if protective actions become necessary. Typical text for the messages are provided in the Matagorda County Emergency Management Plan Procedures. The Station has established notification methods and will provide information to Matagorda County that will allow officials of Matagorda County to make decisions on the appropriate public warning messages to be broadcast via the Emergency Alert System.

Addendum E-1 Emergency Response Facilities Communications
Page 1 of 3

1.0 Function

The communications systems are designed to provide rapid and efficient communications required for operation and administration of the plant under all operating and emergency conditions. The diverse subsystems provided assure that adequate onsite and offsite communications are available to support orderly plant operation, shutdown, firefighting, and evacuation. In addition, attention is given to maintaining contact with the Matagorda County Sheriff's Office, the Department of Public Safety Disaster District in Pierce, Texas, and the Nuclear Regulatory Commission.

2.0 Design Bases

The communications systems are not safety related and have no safety design bases. Failure of these systems shall not compromise any safety-related system nor require a plant shutdown.

The communications systems are designed to provide effective onsite and offsite communications. It allows operation and administration of the plant during all modes of operation.

3.0 Description

3.1 The following typical subsystems are provided:

- *Telephone System*
- *Public Address (paging/alarm system)*
- *Maintenance Jack System*
- *Two-way Radio System*
- *Radio Paging System (beeper)*
- *Communications Console*
- *Satellite Telephone*
- *Emergency Notification & Response System (ENRS)*

3.1.1 Onsite Communications Systems

3.1.1.1 Telephone System

The telephone system is a Public Branch Exchange system that provides dial access to General Telephone Company of the Southwest in the Palacios central office, and microwave circuits to Bay City and Houston. The system has an independent, automatic starting and switching, backup power source. Additionally, dial

Addendum E-1 Emergency Response Facilities Communications
Page 2 of 3

access to the plant voice paging system, the radio paging system (beeper) and telecopiers is provided.

3.1.1.2 Public Address (Paging/Alarm System)

The voice paging and alarm system is provided to transmit routine messages, and emergency signals, such as fire, plant evacuation, and radiation emergency alarms. Flashing lights are provided in high noise areas inside plant buildings.

3.1.1.3 Maintenance Jack System

Telephone jack stations are provided throughout the plant for operating convenience during repair, operation, and maintenance of equipment required for safe shutdown.

Two-Way Radio System Radio repeater base stations provide communication between control base stations, mobile units and hand-held portable radios within the plant area. Self-contained batteries power hand-held portables.

3.1.1.4 Radio Paging System (Beeper)

The radio paging system includes a fixed transmitter and receives only portable units. The pager system is a tone system that may be activated from plant telephones or from offsite touch-tone telephones.

3.1.1.5 Communications Consoles

The communications consoles provide plant operators with access to the telephone system, two-way radio channels, radio paging systems, and the public address systems. Plant emergency and fire alarm signals are activated from designated communications consoles.

3.1.1.6 Emergency Notification & Response System (ENRS)

ENRS is an offsite automated computer operated system used for ERO pager activation and AutoDial Telephone notification of declared emergencies. This system maintains a redundant system in case of a primary system failure. A backup to the offsite automated computer system consists of activation of all STPNOC ERO pagers.

3.1.2 Offsite Communications Systems

Access to the nationwide dial telephone network is through the local telephone exchange at Palacios, Texas. The exchange is owned and operated by General Telephone Company of the Southwest. The Center Point Energy microwave system also provides communication circuits into Houston. Offsite communication with the commercial telephone network is established via these circuits and can be accessed from both the Control Rooms, both Technical Support Centers, and the Emergency Operations Facility.

Addendum E-1 Emergency Response Facilities Communications
Page 3 of 3

Dedicated automatic ringdown lines allow immediate and direct contact with the Matagorda County Sheriff's Office and the Texas Department of Public Safety, Disaster District Sub 2C in Pierce.

The Federal Telephone System (FTS) 2001 is a dedicated telephone system for establishing contact with the Nuclear Regulatory Commission Operations Center in Rockville, Maryland. This telephone circuit is also known as the Emergency Notification System.

The Health Physics Network, another Federal Telephone System (FTS) 2001 dedicated telephone system, is designed to provide communications with the NRC Health Physics Section and/or other nuclear power plants during a declared emergency or drill/exercise.

Special telephone service circuits allow immediate and direct contact with the STP Coordinator.

A satellite telephone is maintained in the Control Rooms. This telephone can be operated on Alternating Current or Direct Current power and provides worldwide access via satellite in case of a total loss of all telephone capability to the Station and/or surrounding area.

3.2 Operation

The communications systems are designed to allow contact among plant personnel, and plant-to-offsite communications during normal and emergency conditions.Station procedure 0PGP05-ZV-0011, Emergency Communications, provides guidance regarding the operation of the Emergency Communication systems when responding to an emergency or drill/exercise. Station procedures 0PGP05-ZV-0002, Emergency Response Activities Schedule, and 0PGP07-ZA-0011, Communication Systems, provide details on the maintenance and testing requirements for the communication systems.

3.3 Systems Interface

The telephone system provides interface between incoming telephone lines, the microwave system, plant voice paging system, radio-paging system, communications consoles and other associated equipment. The communications consoles interface with the telephone system, the radio system, and the plant voice paging system. Radio and telephone equipment used in the Technical Support Centers and Emergency Operations Facility are powered from separate non-Class 1E diesel generator-backed busses. Refer to Figure E-2, Typical Emergency Response Facilities Communications Pathway.

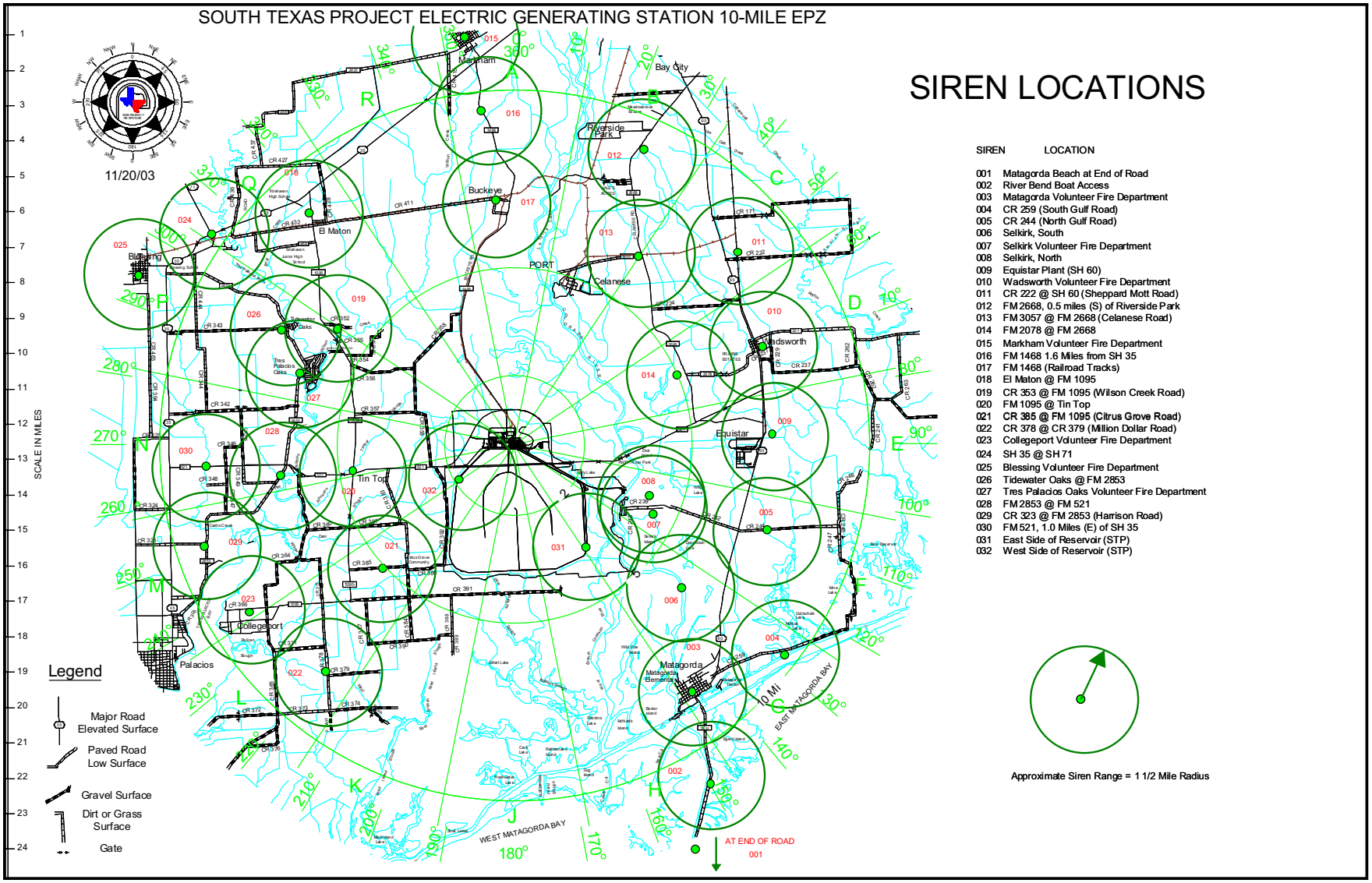

Figure E-1 Siren Locations

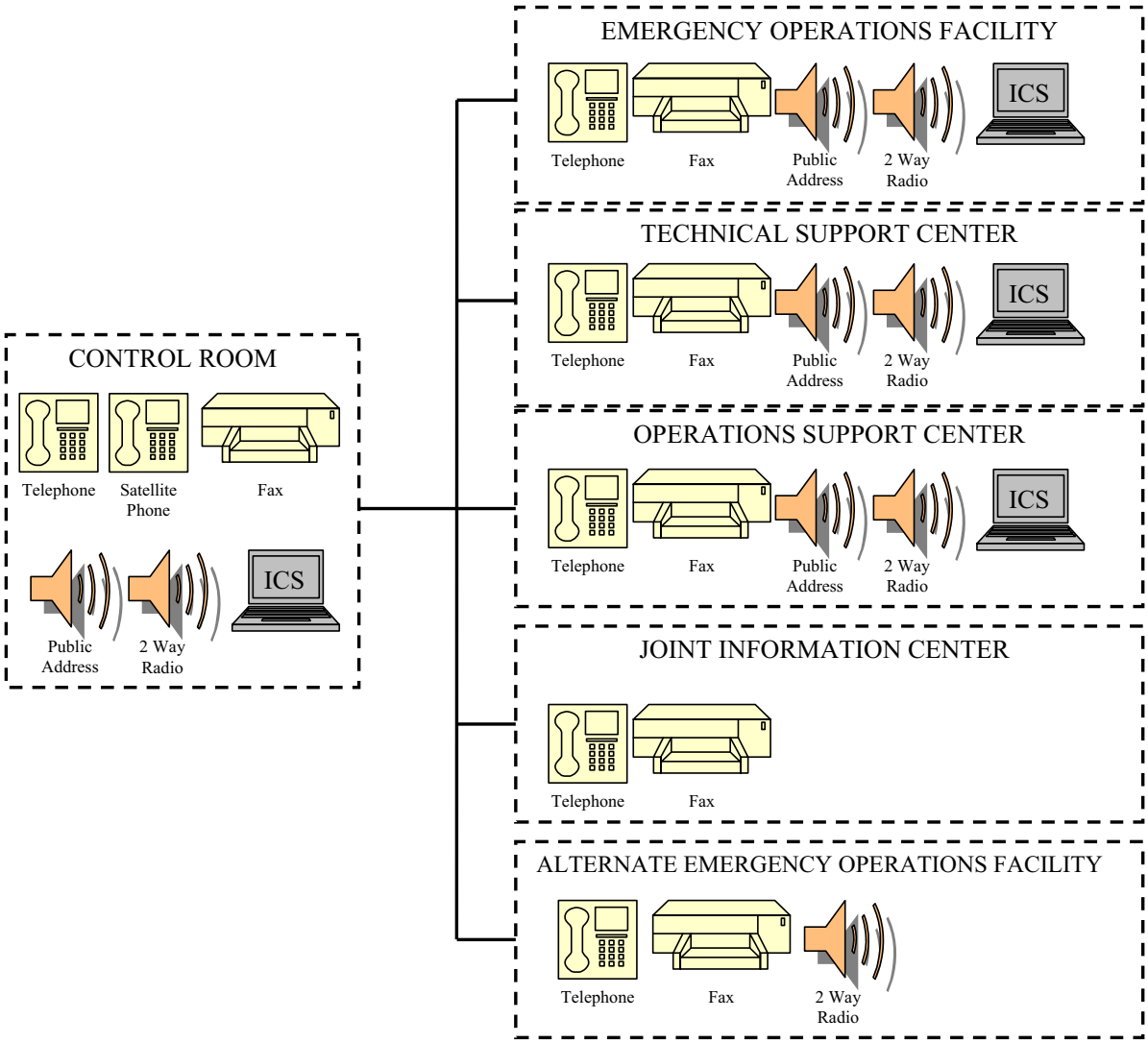

Figure E-2 Typical Emergency Response Facilities Communications Pathway

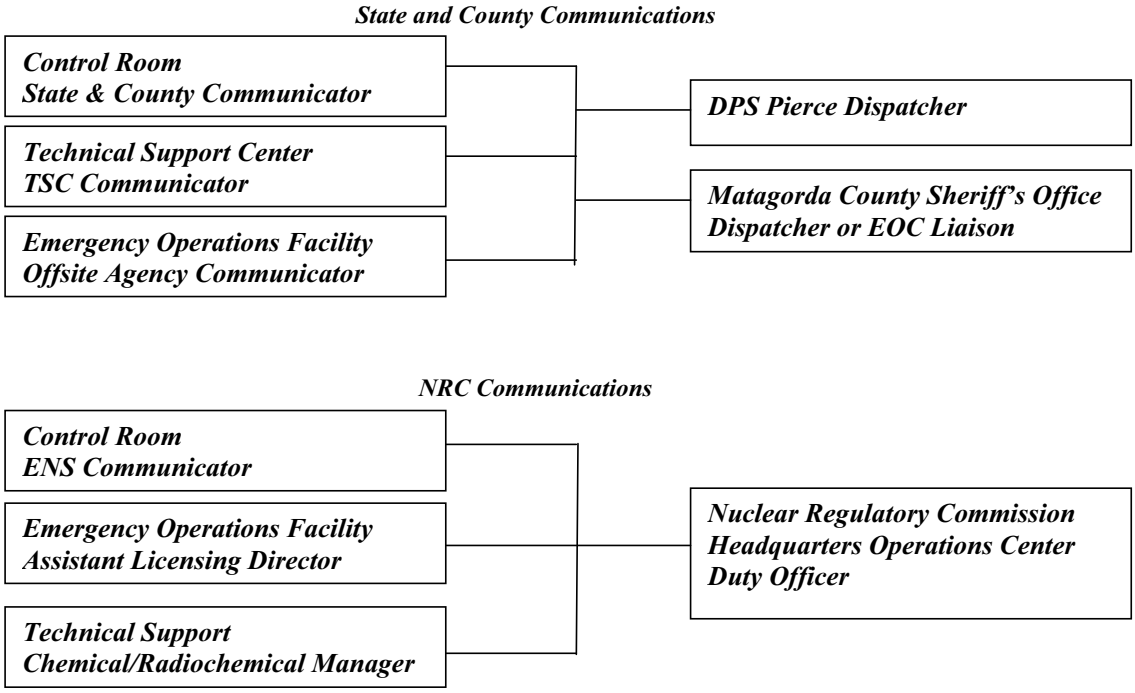

Figure E-3 Emergency Communications Links