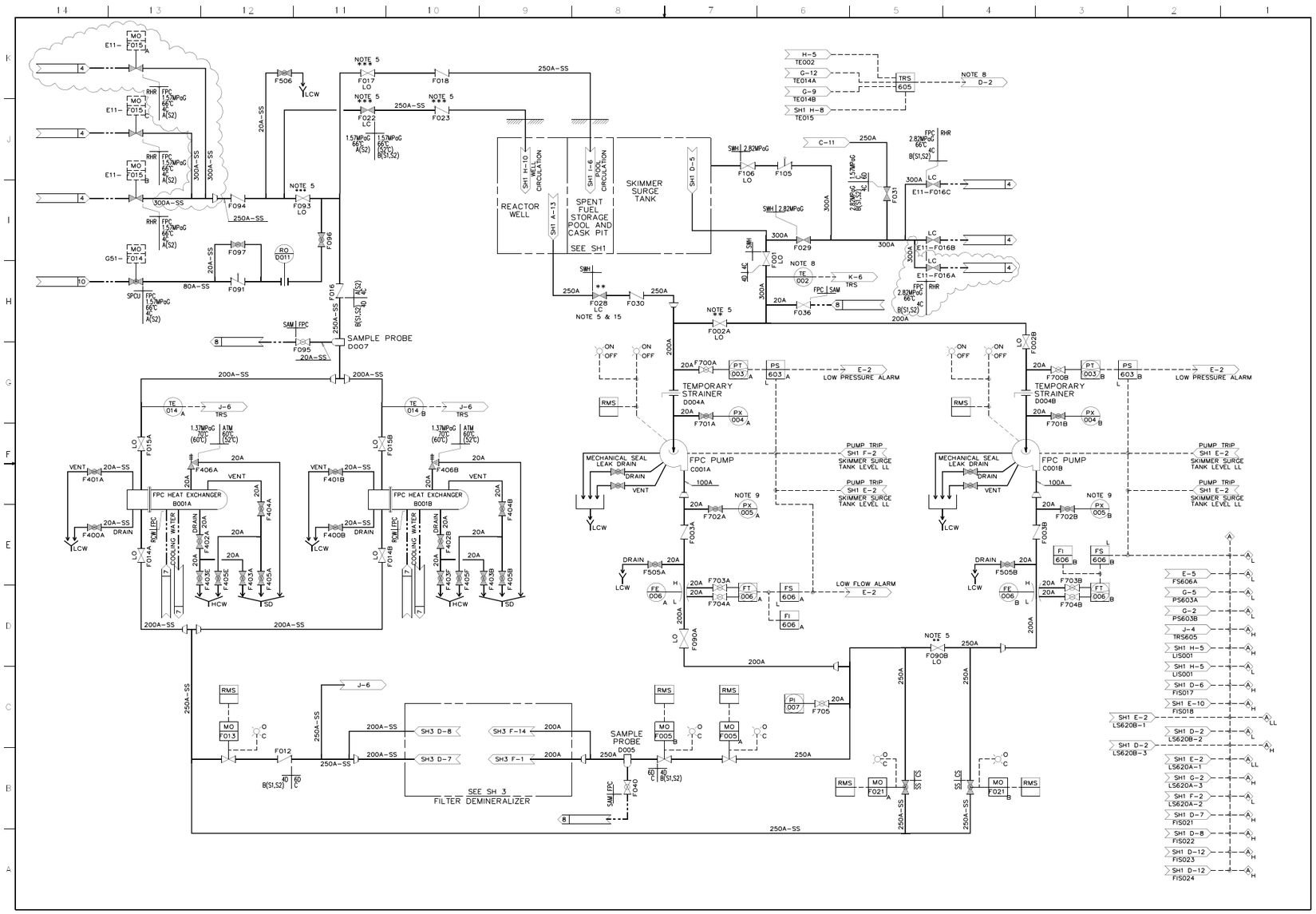

Figure 9.1-1 – Fuel Pool Cooling and Cleanup System P&ID (Sheet 2 of 3)

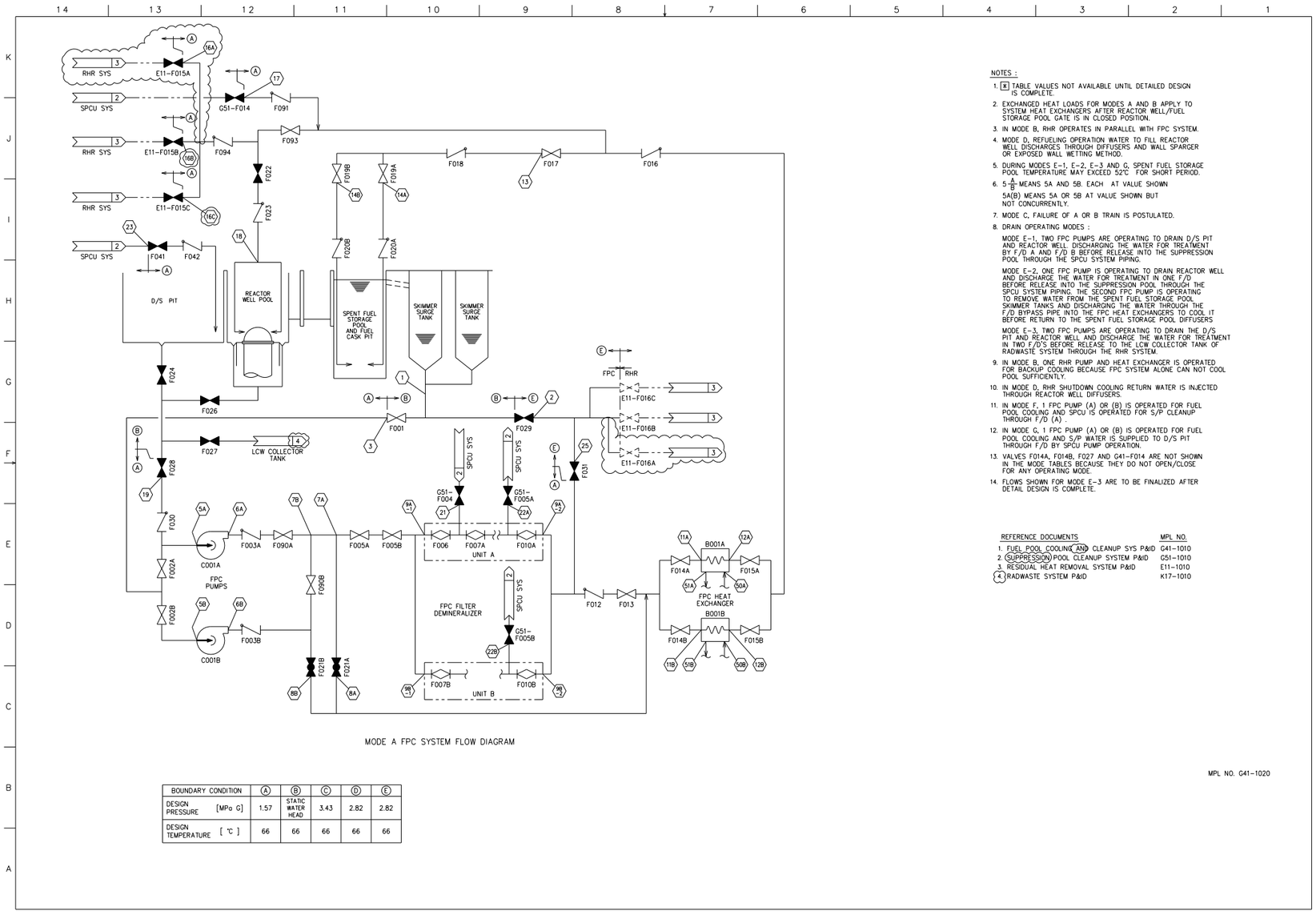

MODE A FPC SYSTEM FLOW DIAGRAM

BOUNDARY CONDITION	Ⓐ	Ⓑ	Ⓒ	Ⓓ	Ⓔ
DESIGN PRESSURE [MPa G]	1.57	STATIC WATER HEAD	3.43	2.82	2.82
DESIGN TEMPERATURE [℃]	66	66	66	66	66

NOTES :

1. ⊠ TABLE VALUES NOT AVAILABLE UNTIL DETAILED DESIGN IS COMPLETE.
2. EXCHANGED HEAT LOADS FOR MODES A AND B APPLY TO SYSTEM HEAT EXCHANGERS AFTER REACTOR WELL/FUEL STORAGE POOL GATE IS IN CLOSED POSITION.
3. IN MODE B, RHR OPERATES IN PARALLEL WITH FPC SYSTEM.
4. MODE D, REFUELING OPERATION WATER TO FILL REACTOR WELL DISCHARGES THROUGH DIFFUSERS AND WALL SPARGER OR EXPOSED WALL WETTING METHOD.
5. DURING MODES E-1, E-2, E-3 AND G, SPENT FUEL STORAGE POOL TEMPERATURE MAY EXCEED 52℃ FOR SHORT PERIOD.
6. 5 $\frac{A}{B}$ MEANS 5A AND 5B. EACH AT VALUE SHOWN

   5A(B) MEANS 5A OR 5B AT VALUE SHOWN BUT NOT CONCURRENTLY.
7. MODE C, FAILURE OF A OR B TRAIN IS POSTULATED.
8. DRAIN OPERATING MODES :

   MODE E-1, TWO FPC PUMPS ARE OPERATING TO DRAIN D/S PIT AND REACTOR WELL. DISCHARGING THE WATER FOR TREATMENT BY F/D A AND F/D B BEFORE RELEASE INTO THE SUPPRESSION POOL THROUGH THE SPCU SYSTEM PIPING.

   MODE E-2, ONE FPC PUMP IS OPERATING TO DRAIN REACTOR WELL AND DISCHARGE THE WATER FOR TREATMENT IN ONE F/D BEFORE RELEASE INTO THE SUPPRESSION POOL THROUGH THE SPCU SYSTEM PIPING. THE SECOND FPC PUMP IS OPERATING TO REMOVE WATER FROM THE SPENT FUEL STORAGE POOL SKIMMER TANKS AND DISCHARGING THE WATER THROUGH THE F/D BYPASS PIPE INTO THE FPC HEAT EXCHANGERS TO COOL IT BEFORE RETURN TO THE SPENT FUEL STORAGE POOL DIFFUSERS

   MODE E-3, TWO FPC PUMPS ARE OPERATING TO DRAIN THE D/S PIT AND REACTOR WELL AND DISCHARGE THE WATER FOR TREATMENT IN TWO F/D'S BEFORE RELEASE TO THE LCW COLLECTOR TANK OF RADWASTE SYSTEM THROUGH THE RHR SYSTEM.
9. IN MODE B, ONE RHR PUMP AND HEAT EXCHANGER IS OPERATED FOR BACKUP COOLING BECAUSE FPC SYSTEM ALONE CAN NOT COOL POOL SUFFICIENTLY.
10. IN MODE D, RHR SHUTDOWN COOLING RETURN WATER IS INJECTED THROUGH REACTOR WELL DIFFUSERS.
11. IN MODE F, 1 FPC PUMP (A) OR (B) IS OPERATED FOR FUEL POOL COOLING AND SPCU IS OPERATED FOR S/P CLEANUP THROUGH F/D (A).
12. IN MODE G, 1 FPC PUMP (A) OR (B) IS OPERATED FOR FUEL POOL COOLING AND S/P WATER IS SUPPLIED TO D/S PIT THROUGH F/D BY SPCU PUMP OPERATION.
13. VALVES F014A, F014B, F027 AND G41-F014 ARE NOT SHOWN IN THE MODE TABLES BECAUSE THEY DO NOT OPEN/CLOSE FOR ANY OPERATING MODE.
14. FLOWS SHOWN FOR MODE E-3 ARE TO BE FINALIZED AFTER DETAIL DESIGN IS COMPLETE.

REFERENCE DOCUMENTS	MPL NO.
1. FUEL POOL COOLING AND CLEANUP SYS P&ID	G41-1010
2. SUPPRESSION POOL CLEANUP SYSTEM P&ID	G51-1010
3. RESIDUAL HEAT REMOVAL SYSTEM P&ID	E11-1010
4. RADWASTE SYSTEM P&ID	K17-1010

MPL NO. G41-1020

Figure 9.1-2 – Fuel Pool Cooling and Cleanup System PFD (Sheet 1 of 2)

MODE A: NORMAL HEAT LOAD OPERATING MODE

POSITION ◯	1	3	5 A/B	6 A/B	7A	7B	9 A-1/B-1	9 A-2/B-2	11 A/B	12 A/B	13	14 A/B	50 A/B	51 A/B
FLOW (m³/h)	500	500	250	250	500	500	250	250	250	250	500	250		
PRESS (MPa G)	*	*	*	*	*	*	*	*	*	*	*	*		
TEMP (℃)	52	←						→	52	45.4	45.4	45.4		
Max ALLOWABLE PRESS LOSS (m)			TDH = 80				ΔP = 41		ΔP = 7					

EXCHANGED HEAT/UNIT 6.9 X 10⁶ kJ/h (21 DAYS AFTER SHUTDOWN) NOTE 2

MODE B: MAXIMUM HEAT LOAD OPERATING MODE NOTE 9

POSITION ◯	1	2	3	5 A/B	6 A/B	7A	7B	9 A-1/B-1	9 A-2/B-2	11 A/B	12 A/B	13	16A(B,C)	14 A/B	50 A/B	51 A/B
FLOW (m³/h)	850	350	500	250	250	500	500	250	250	250	250	850	350	425		
PRESS (MPa G)	*	*	*	*	*	*	*	*	*	*	*	*	*	*		
TEMP (℃)	60	←							→	60	53.4	51.5	48.9	51.5		

EXCHANGED HEAT/UNIT 30.14 X 10⁶ kJ/h (21 DAYS AFTER SHUTDOWN) NOTE 2
FPC Hx/UNIT 6.9 X 10⁶ kJ/h AND RHR Hx 16.32 X 10⁶ kJ/h

MODE C: COOLING MODE AFTER EARTHQUAKE (POSTULATED SINGLE FAILURE) NOTE 7

POSITION ◯	1	3	5A	6A	7A	8A	11A	12A	13	14 A/B	50A	51A
FLOW (m³/h)	250	250	250	250	250	250	250	250	250	125		
PRESS (MPa G)	*	*	*	*	*	*	*	*	*	*		
TEMP (℃)	62.7	←					→	62.7	51.9	51.9	51.9	

EXCHANGED HEAT 11.22 X 10⁶ kJ/h (45 DAYS AFTER SHUTDOWN)

MODE D: REFUELING OPERATING MODE NOTE 10

POSITION ◯	1	3	5 A/B	6 A/B	7A	7B	9 A-1/B-1	9 A-2/B-2	11 A/B	12 A/B	13	50 A/B	51 A/B	16A(B,C)	18
FLOW (m³/h)	500	500	250	250	500	500	250	250	250	250	500			954	954
PRESS (MPa G)	*	*	*	*	*	*	*	*	*	*	*			*	*
TEMP (℃)	Max 52	←						→	Max 52	Max 45.4	Max 45.4			Max 52	Max 52

MODE E1: DRAIN OPERATING MODE NOTES 5 & 8

POSITION ◯	19	5 A/B	6 A/B	7A	7B	9 A-1/B-1	22 A/B
FLOW (m³/h)	500	250	250	500	500	250	250
PRESS (MPa G)	*	*	*	*	*	*	*
TEMP (℃)	Max 52	←					→ Max 52

MODE E3: DRAIN OPERATING MODE NOTES 5,8 & 14

POSITION ◯	19	5 A/B	6 A/B	7A	7B	9 A-1/B-1	9 A-2/B-2	25
FLOW (m³/h)	500	250	250	500	500	250	250	500
PRESS (MPa G)	*	*	*	*	*	*	*	*
TEMP (℃)	Max 52	←						→ Max 52

MODE E2: DRAIN OPERATING MODE NOTES 5 & 8

POSITION ◯	19	5A	6A	7A	7B	9A-1 (B-1)	22A(B)	1	3	4	5B	6B	8A	11 A/B	12 A/B	13	14 A/B	50 A/B	51 A/B
FLOW (m³/h)	250	250	250	250	250	250	250	250	250	250	250	250	250	125	125	250	125		
PRESS (MPa G)	*	*	*	*	*	*	*	*	*	*	*	*	*	*	*	*	*		
TEMP (℃)	Max 52	←											→	Max 52	Max 42.2	Max 42.2	Max 42.2		

MODE F: SUPPRESSION POOL CLEANUP OPERATING MODE NOTE 11

POSITION ◯	1	3	5A(B)	6A(B)	7A	7B	9B-1	9B-2	11 A/B	12 A/B	13	14 A/B	50 A/B	51 A/B	21	22A
FLOW (m³/h)	250	250	250	250	250	250	250	250	125	125	250	125			250	250
PRESS (MPa G)	*	*	*	*	*	*	*	*	*	*	*	*			*	*
TEMP (℃)	53.7	←						→	53.7	42.9	42.9	42.9			Max 35	Max 35

EXCHANGED HEAT 11.22 X 10⁶ kJ/h (45 DAYS AFTER SHUTDOWN)

MODE G: D/S PIT AND REACTOR WELL FILL OPERATING MODE NOTES 5 & 12

POSITION ◯	1	3	5A(B)	6A(B)	7A	7B	9B-1	9B-2	11 A/B	12 A/B	13	14 A/B	50 A/B	51 A/B	21	22A	23
FLOW (m³/h)	250	250	250	250	250	250	250	250	125	125	250	125			250	250	250
PRESS (MPa G)	*	*	*	*	*	*	*	*	*	*	*	*			*	*	*
TEMP (℃)	Max 52	←									→	Max 52			Max 35	Max 35	Max 35

VALVE OPENING/CLOSING CONDITION NOTE 13

	F001	F002A	F002B	F090A	F090B	F021A	F021B	F005 A,B	F013	F014A	F014B	F015A	F015B	F017	F022	F024	F026	F028	F029	F041	F093	F006	F010A	G51-F004	G51-F005A	F007B	F010B	G51-F005B	E11-F015A	E11-F015B	E11-F015C	E11-F016A	E11-F016B	E11-F016C	F031
MODE A	O	O	O	O	O	X	X	O	O	O	O	O	O	O	X	X	X	X	X	X	O	O	O	X	X	O	O	X	X	X	X	X	X	X	X
MODE B	O	O	O	O	O	X	X	O	O	O	O	O	O	O	X	X	X	X	O	X	O	O	O	X	X	O	O	X	O X X	O X X	O O X	O X X	O X X	O X X	O
MODE C	O	O/X	X/O	O	O	P/X	X/P	X	X	O/X	X/O	O/X	X/O	O	X	X	X	X	X	X	O	O	O	X	X	O	O	X	X	X	X	X	X	X	X
MODE D	O	O	O	O	O	X	X	O	O	O	O	O	O	O	O	X	X	X	X	X	X	O	O	X	X	O	O	X	O X X	O X X	O X X	O	X	X	X
MODE E1	X	O	O	O	O	X	X	O	O	O	O	O	O	O	X	O	O	O	X	X	O	O	X	X	O	O	X	O	X	X	X	X	X	X	X
MODE E2	O	X	O	O	X	X	P	O	O	O	O	O	O	O	X	X	O	O	X	X	O	O/X	X	X	O/X	X/O	X	X/O	X	X	X	X	X	X	X
MODE E3	X	O	O	O	O	X	X	O	X	O	O	O	O	O	X	O	O	O	X	X	O	O	O	X	X	O	O	X	X	X	X	O X X	O X X	O X X	O
MODE F	O	O/X	X/O	O	O	X	X	O	O	O	O	O	O	O	X	X	X	X	X	X	O	X	X	O	O	O	O	X	X	X	X	X	X	X	X
MODE G	O	O/X	X/O	O	O	X	X	O	O	O	O	O	O	O	X	X	X	X	X	O	O	X	X	O	O	O	O	X	X	X	X	X	X	X	X

O : OPEN P : PARTIALLY OPEN X : CLOSE

Figure 9.1-2 – Fuel Pool Cooling and Cleanup System PFD (Sheet 2 of 2)

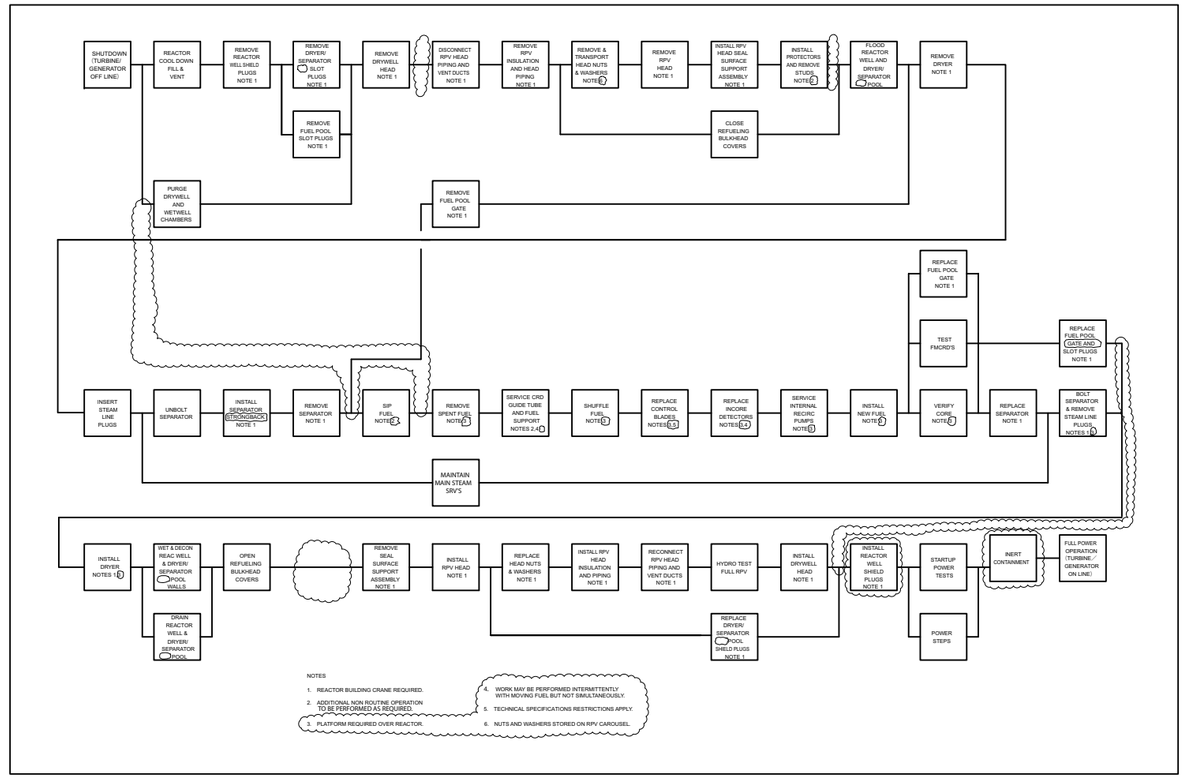

Figure 9.1-12 – Plant Refueling And Servicing Sequence

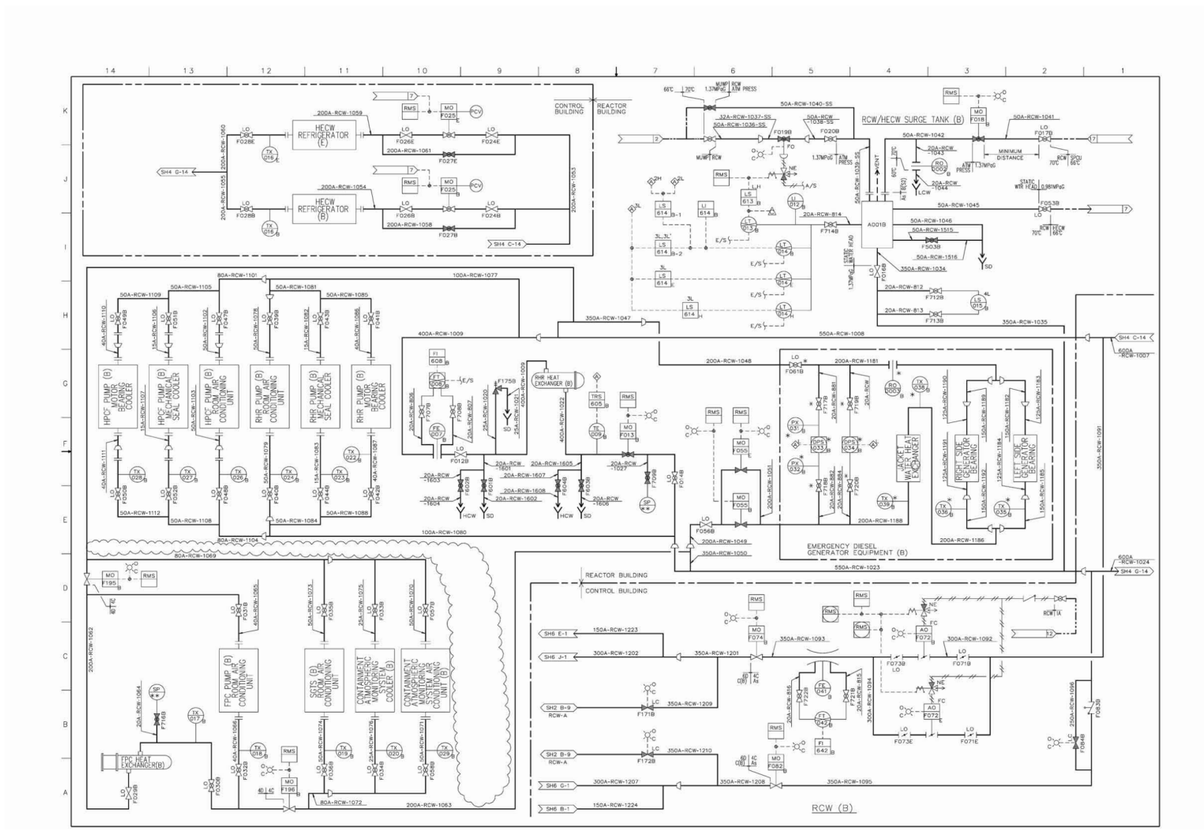

Figure 9.2-1 – Reactor Building Cooling Water System P&ID (Sheet 5 of 9)

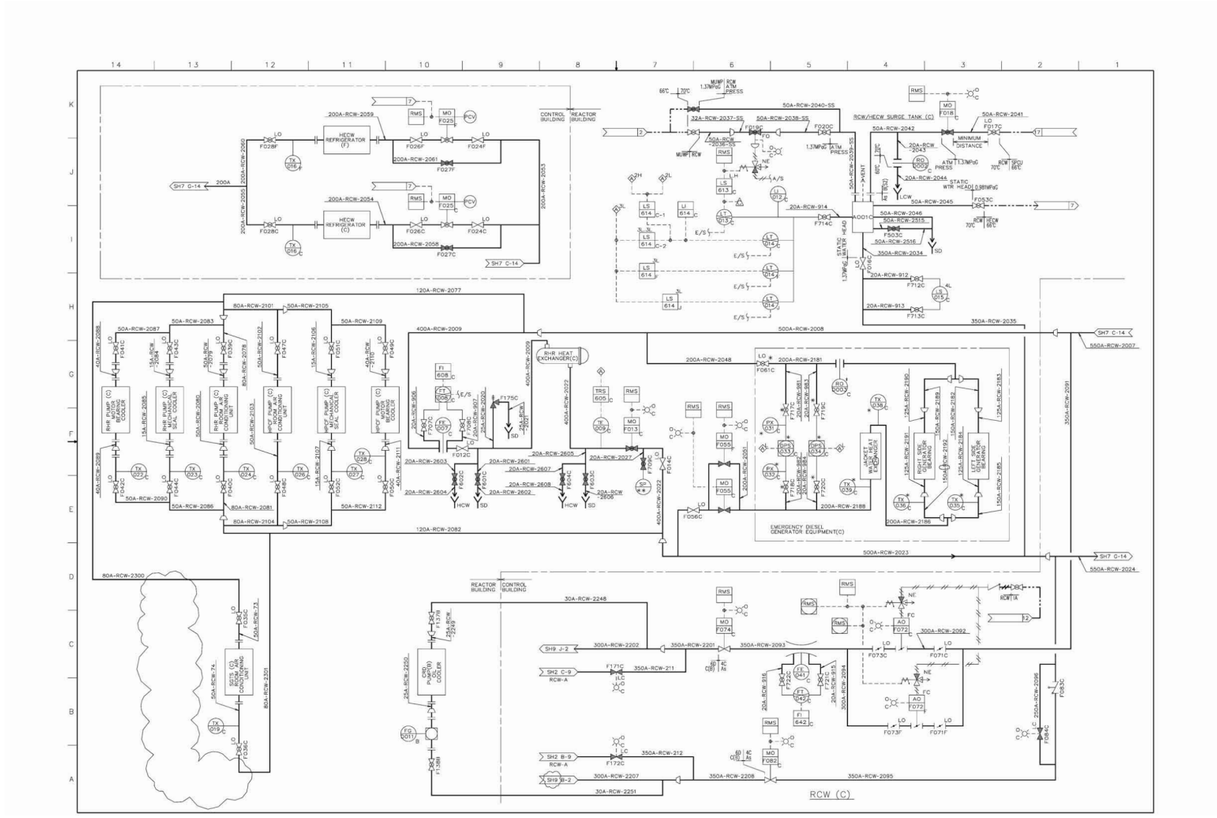

Figure 9.2-1 – Reactor Building Cooling Water System P&ID (Sheet 8 of 9)

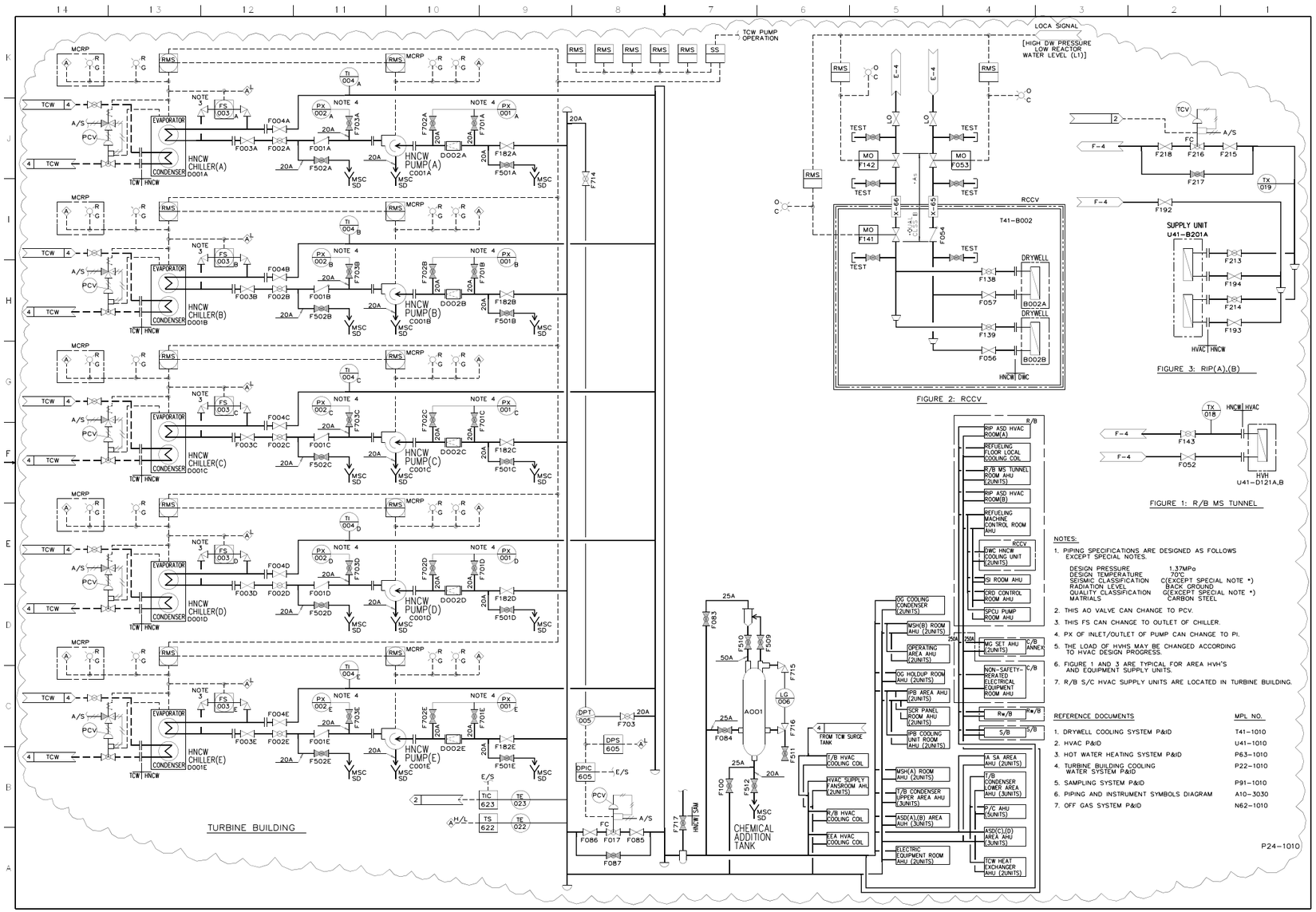

Figure 9.2-2 – Hvac Normal Cooling Water System P&ID

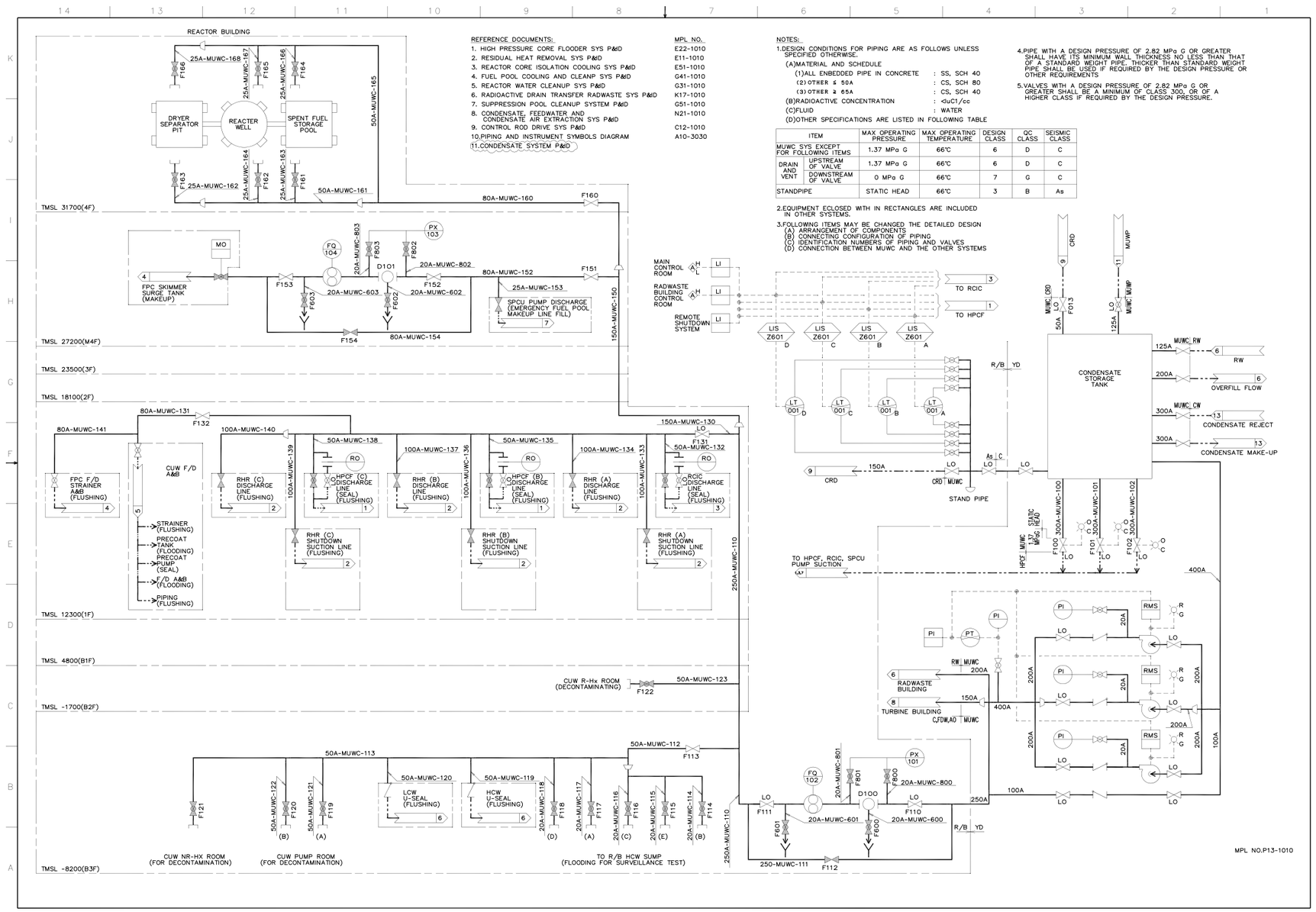

Figure 9.2-4 – Makeup Water System (Condensate) P&ID (Sheet 1 of 1)

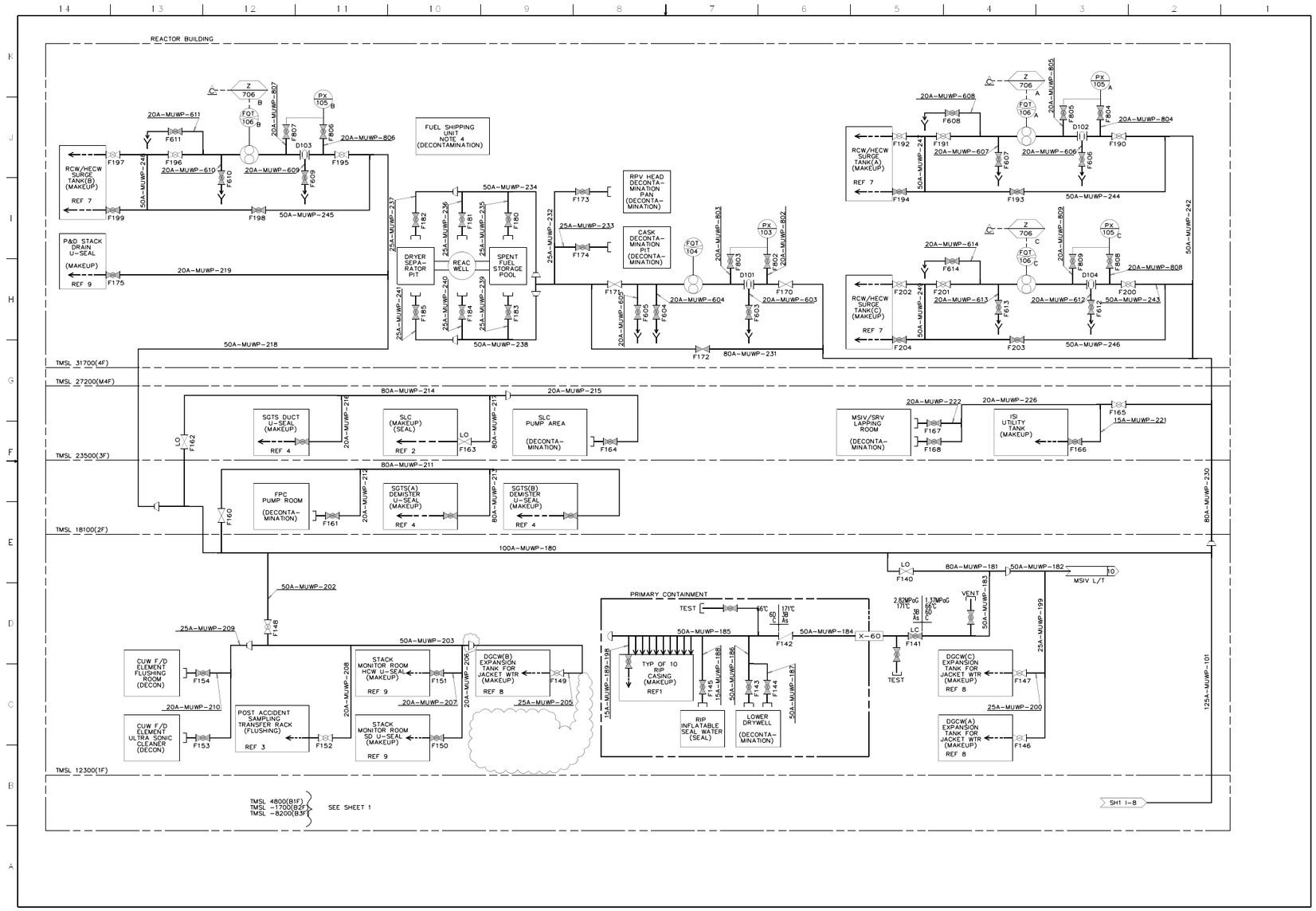

Figure 9.2-5 – Makeup Water System (Purified) P&ID (Sheet 2 of 3)

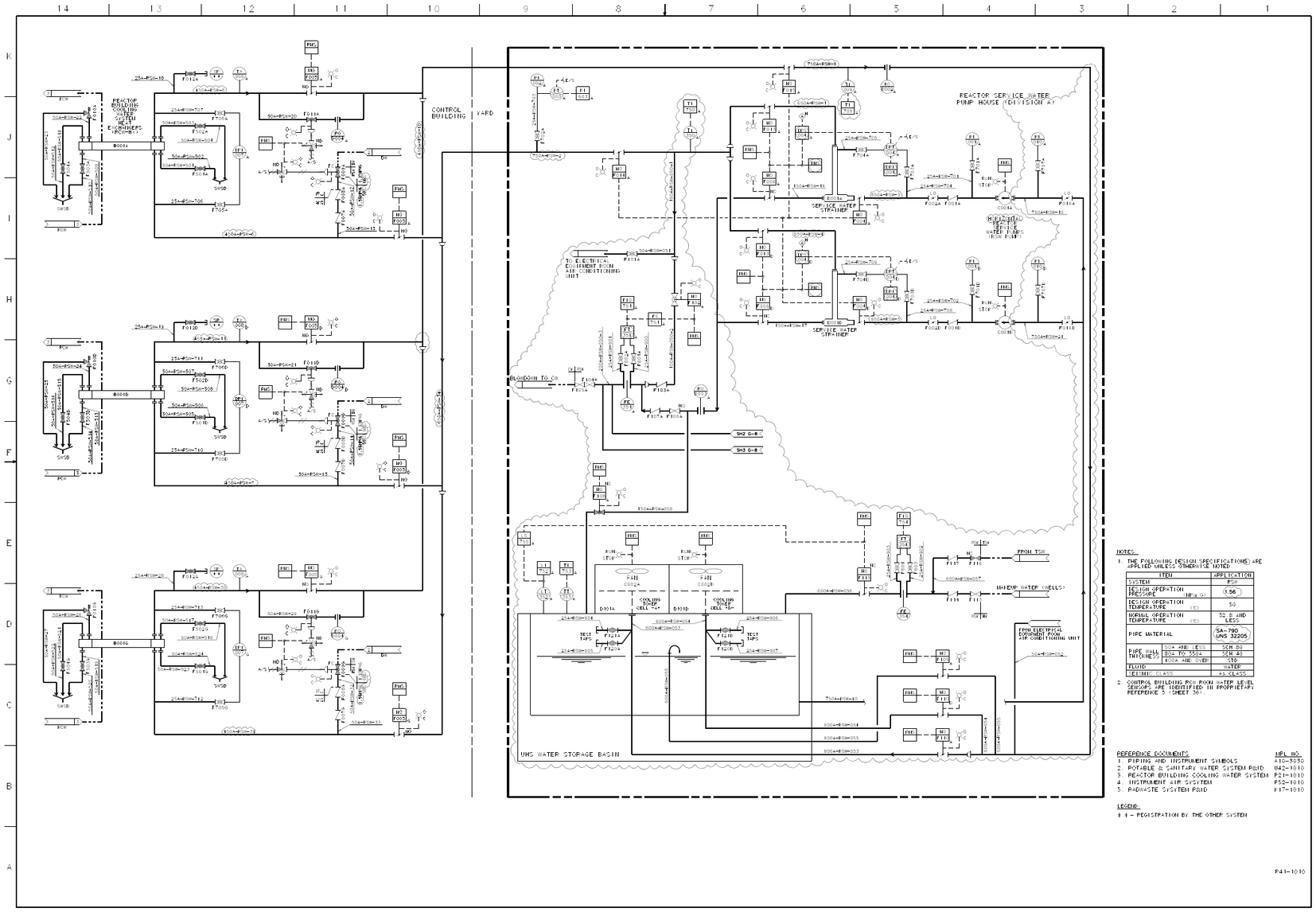

Figure 9.2-7 – Reactor Service Water System P&ID (Sheet 1 of 3)

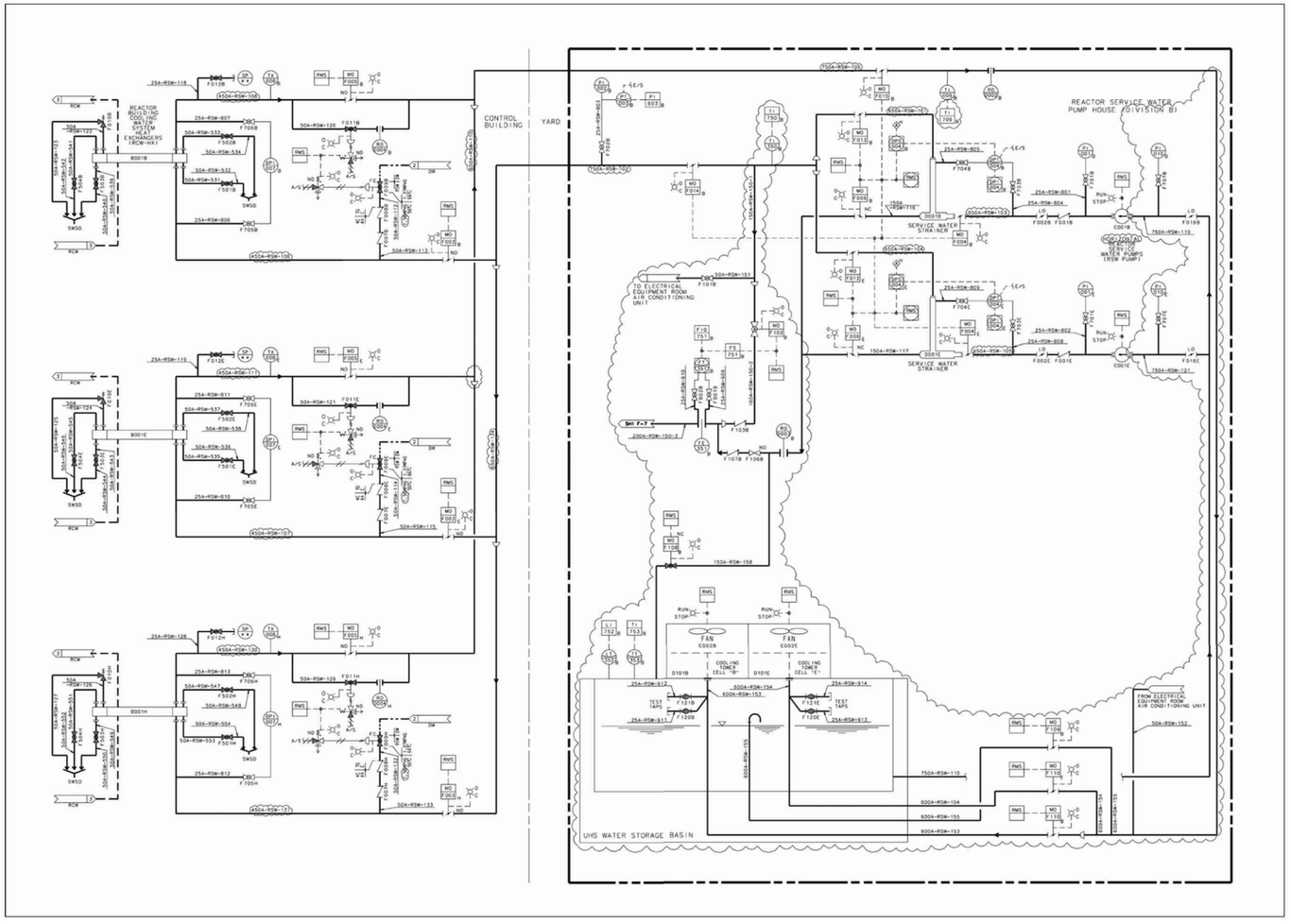

Figure 9.2-7 – Reactor Service Water System P&ID (Sheet 2 of 3)

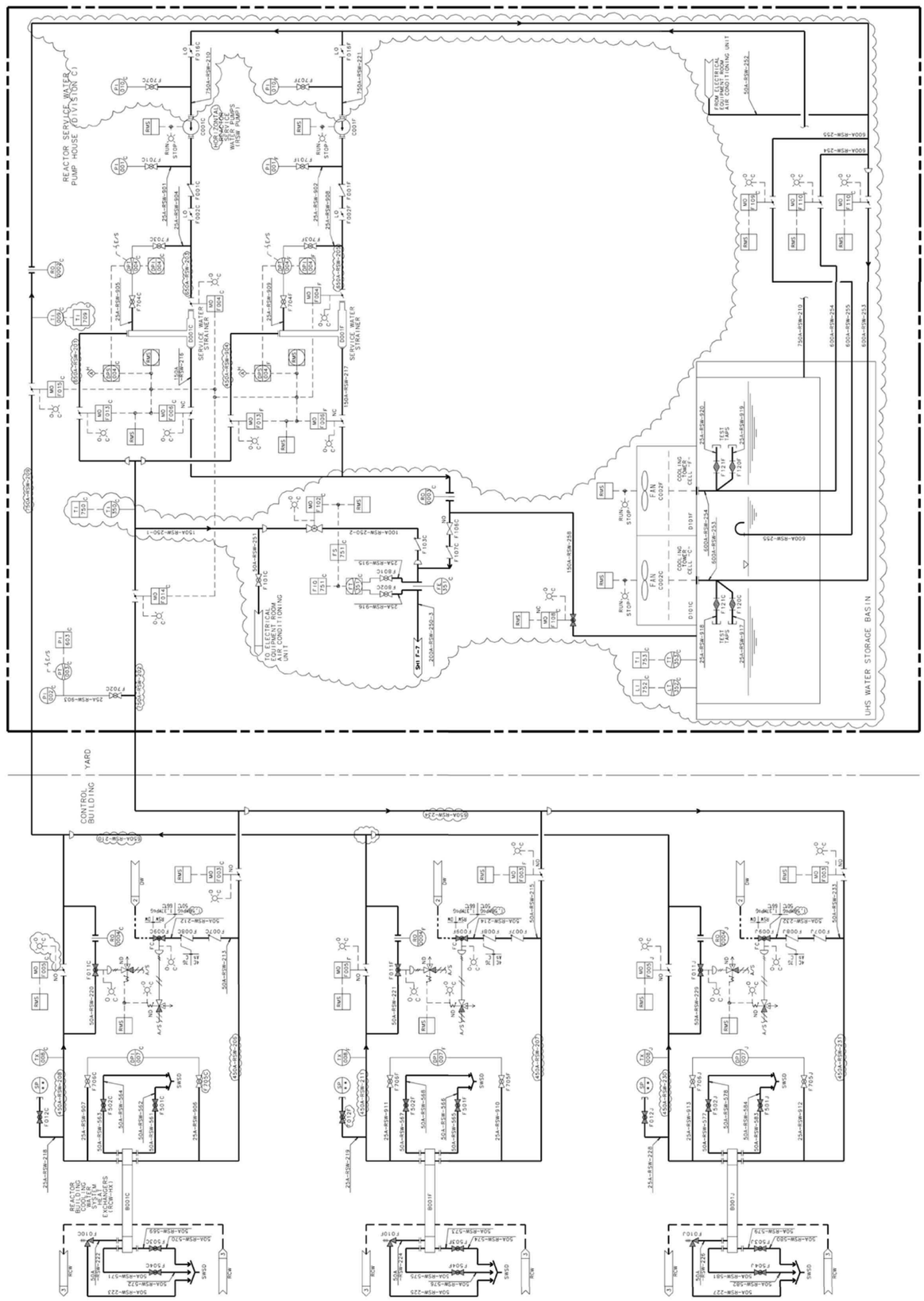

Figure 9.2-7 – Reactor Service Water System P&ID (Sheet 3 of 3)

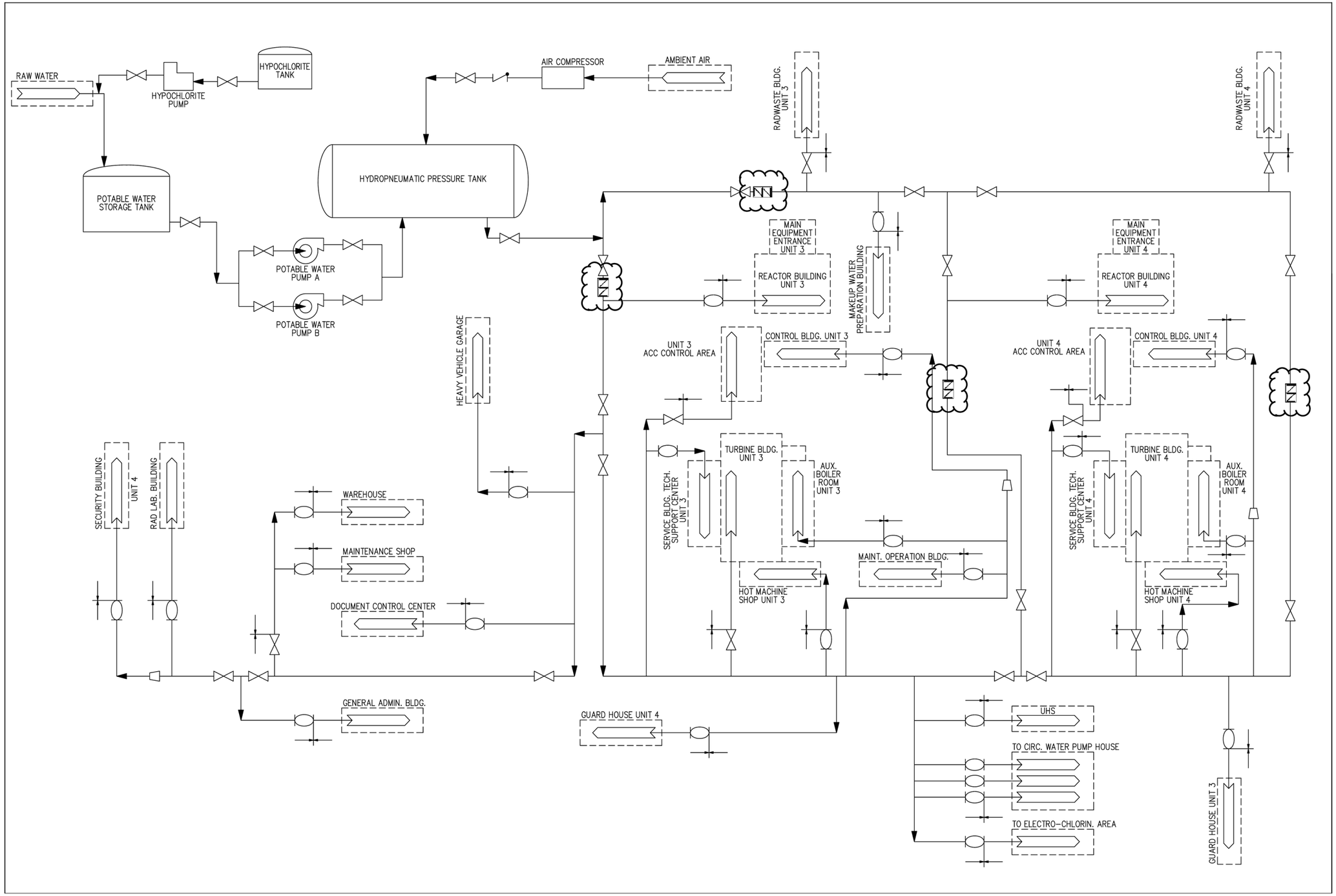

Figure 9.2-9 – Potable and Sanitary Water System P&ID (Sheet 2 of 2)