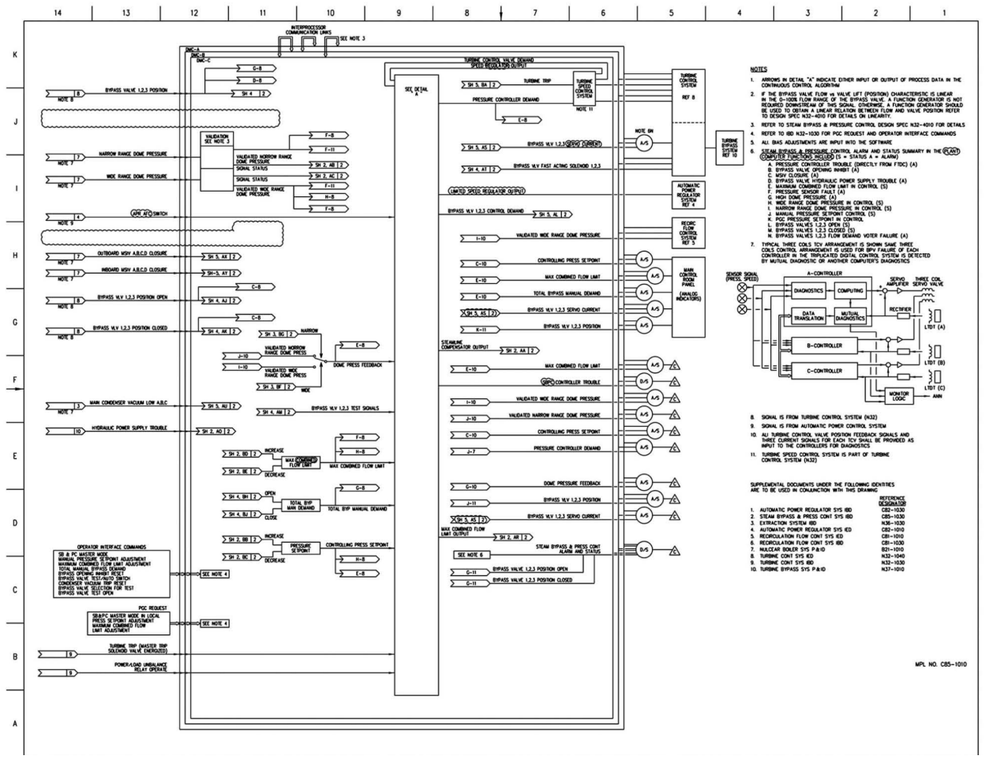

Figure 7.7-12 – Steam Bypass and Pressure Control System IED (Sheet 1 of 2)

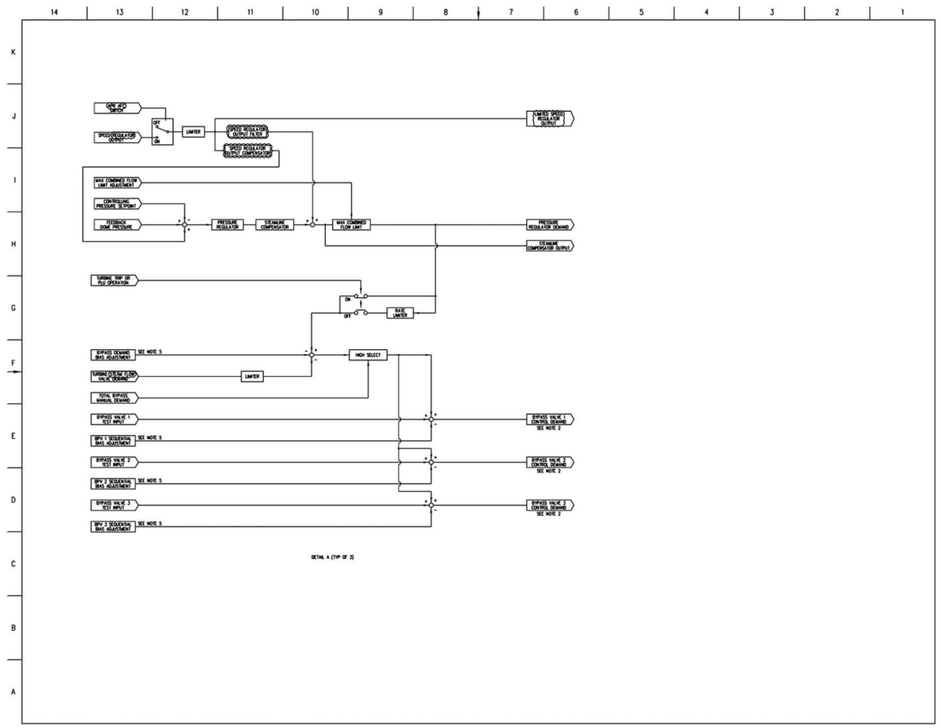

Figure 7.7-12 – Steam Bypass and Pressure Control System IED (Sheet 2 of 2)

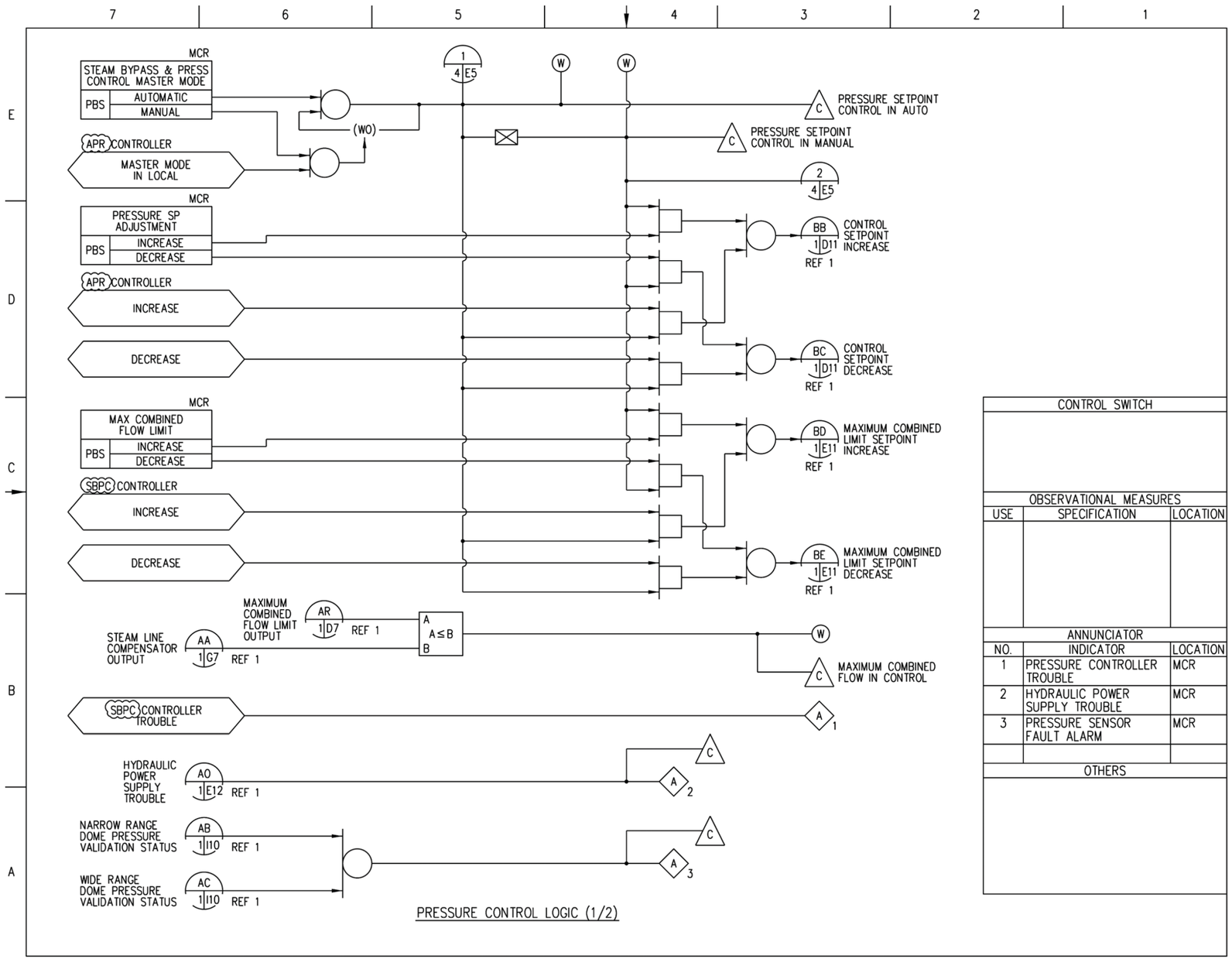

Figure 7.7-13 – Steam Bypass and Pressure Control System IBD (Sheet 2 of 5)

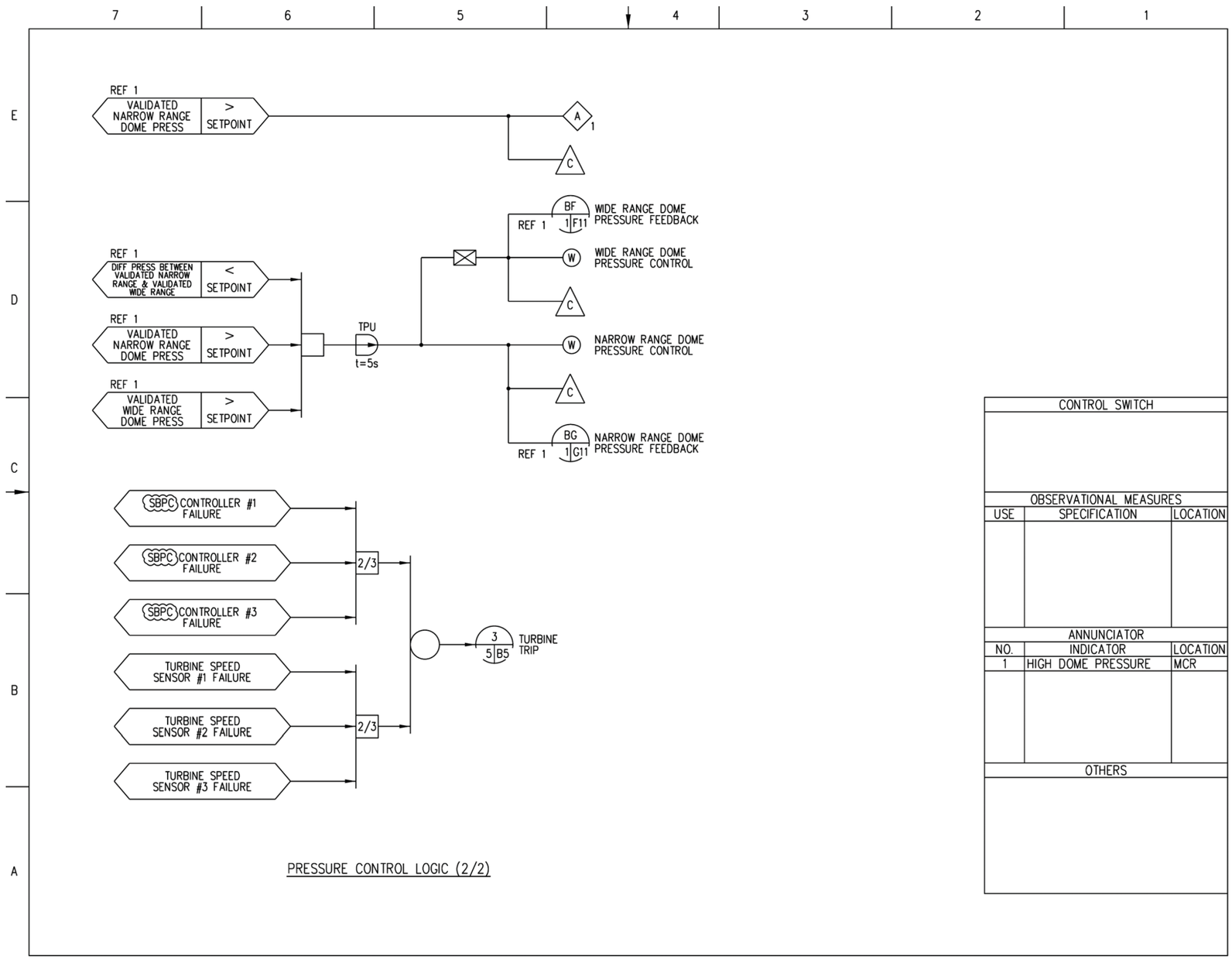

Figure 7.7-13 – Steam Bypass and Pressure Control System IBD (Sheet 3 of 5)

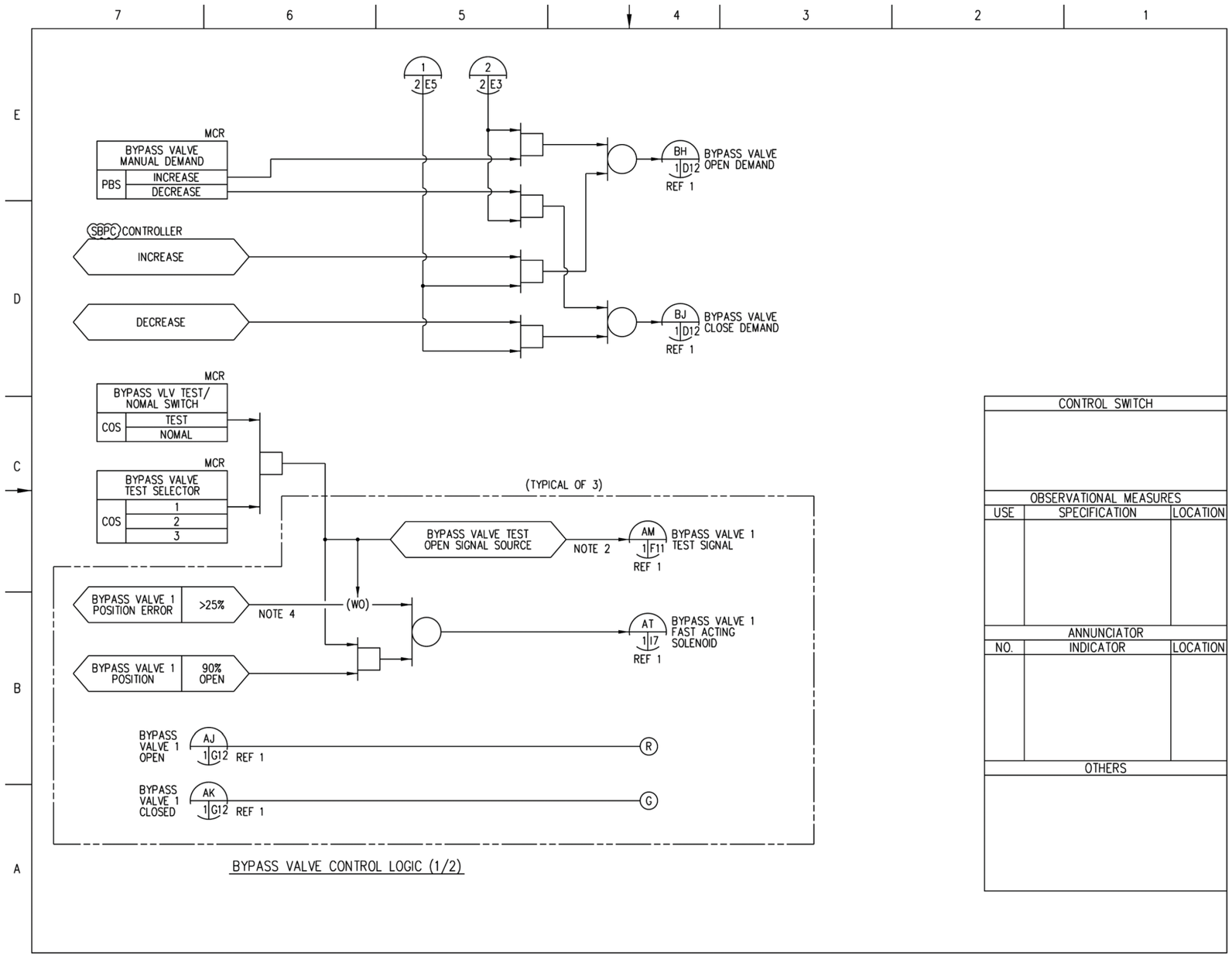

Figure 7.7-13 – Steam Bypass and Pressure Control System IBD (Sheet 4 of 5)

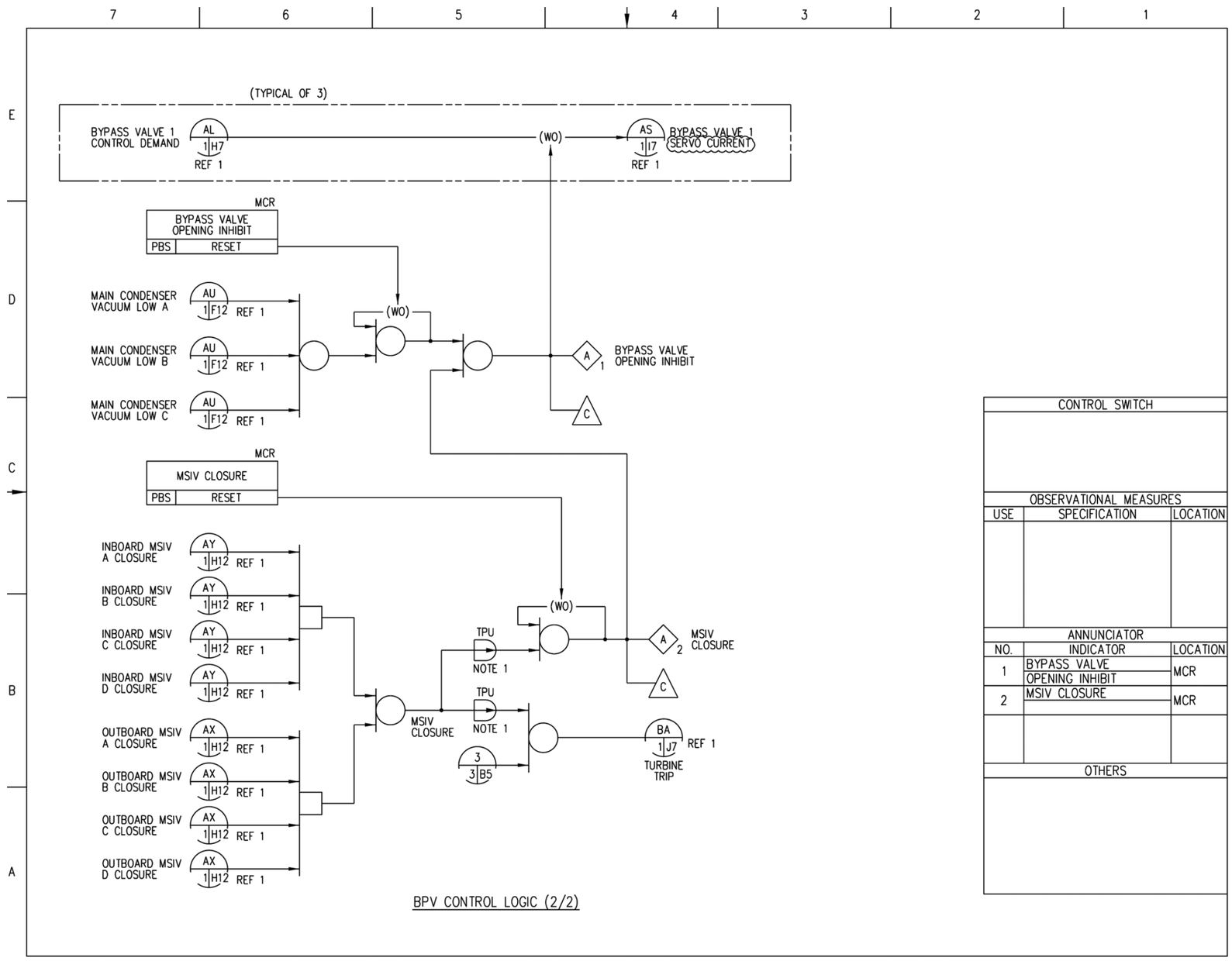

Figure 7.7-13 – Steam Bypass and Pressure Control System IBD (Sheet 5 of 5)

[redacted]

PROPRIETARY INFORMATION

Figure 8.2-1 – Power Distribution Routing Diagram (Sheet 1 of 7)

PROPRIETARY INFORMATION

Figure 8.2-1 – Power Distribution Routing Diagram (Sheet 2 of 7)

[redacted]

PROPRIETARY INFORMATION

Figure 8.2-1 – Power Distribution Routing Diagram (Sheet 3 of 7)

[redacted]

PROPRIETARY INFORMATION

Figure 8.2-1 – Power Distribution Routing Diagram (Sheet 4 of 7)

[redacted]

PROPRIETARY INFORMATION

Figure 8.2-1 – Power Distribution Routing Diagram (Sheet 5 of 7)

[redacted]

PROPRIETARY INFORMATION

Figure 8.2-1 – Power Distribution Routing Diagram (Sheet 6 of 7)

PROPRIETARY INFORMATION

Figure 8.2-1 – Power Distribution Routing Diagram (Sheet 7 of 7)

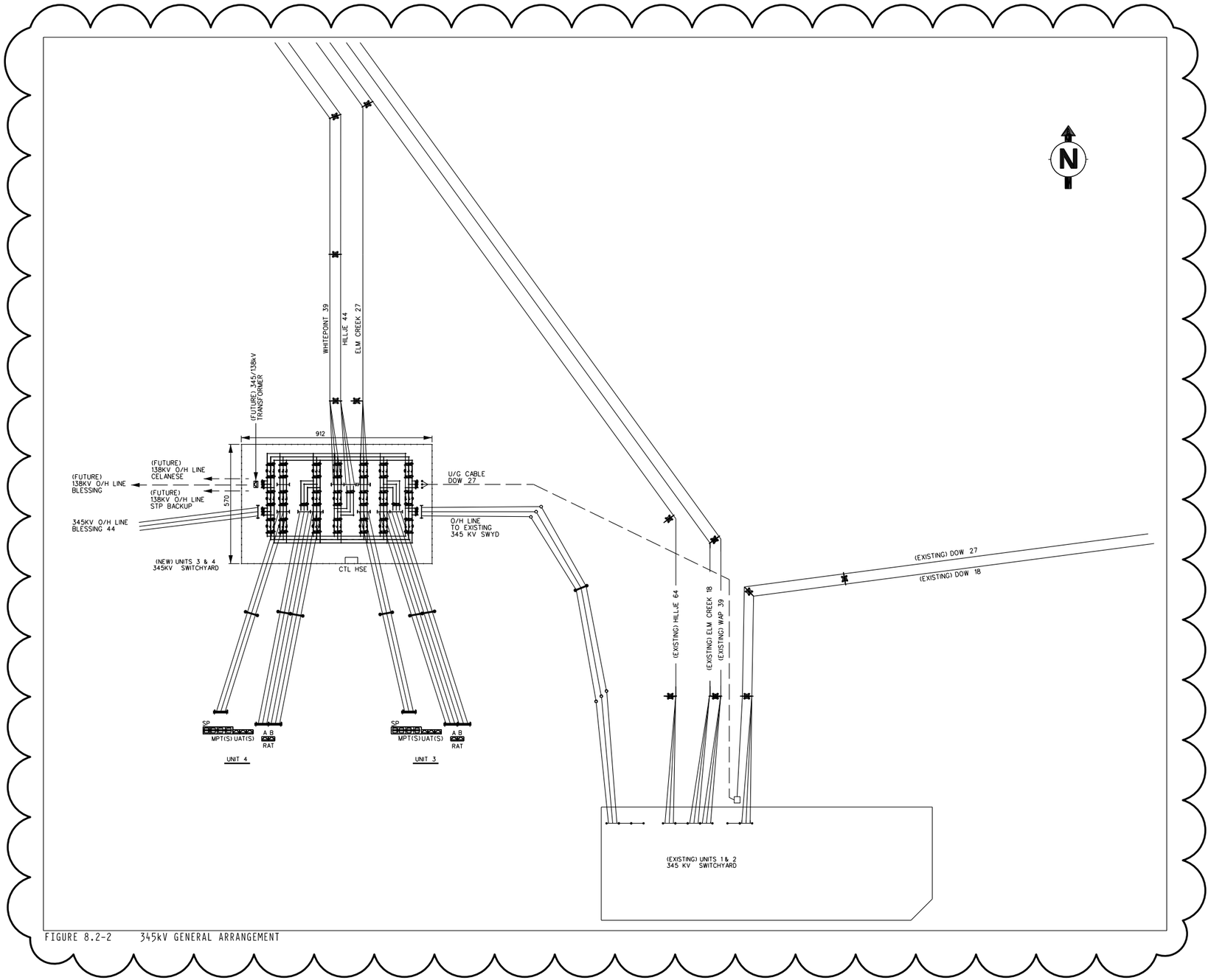

Figure 8.2-2 – 345 kV General Arrangement

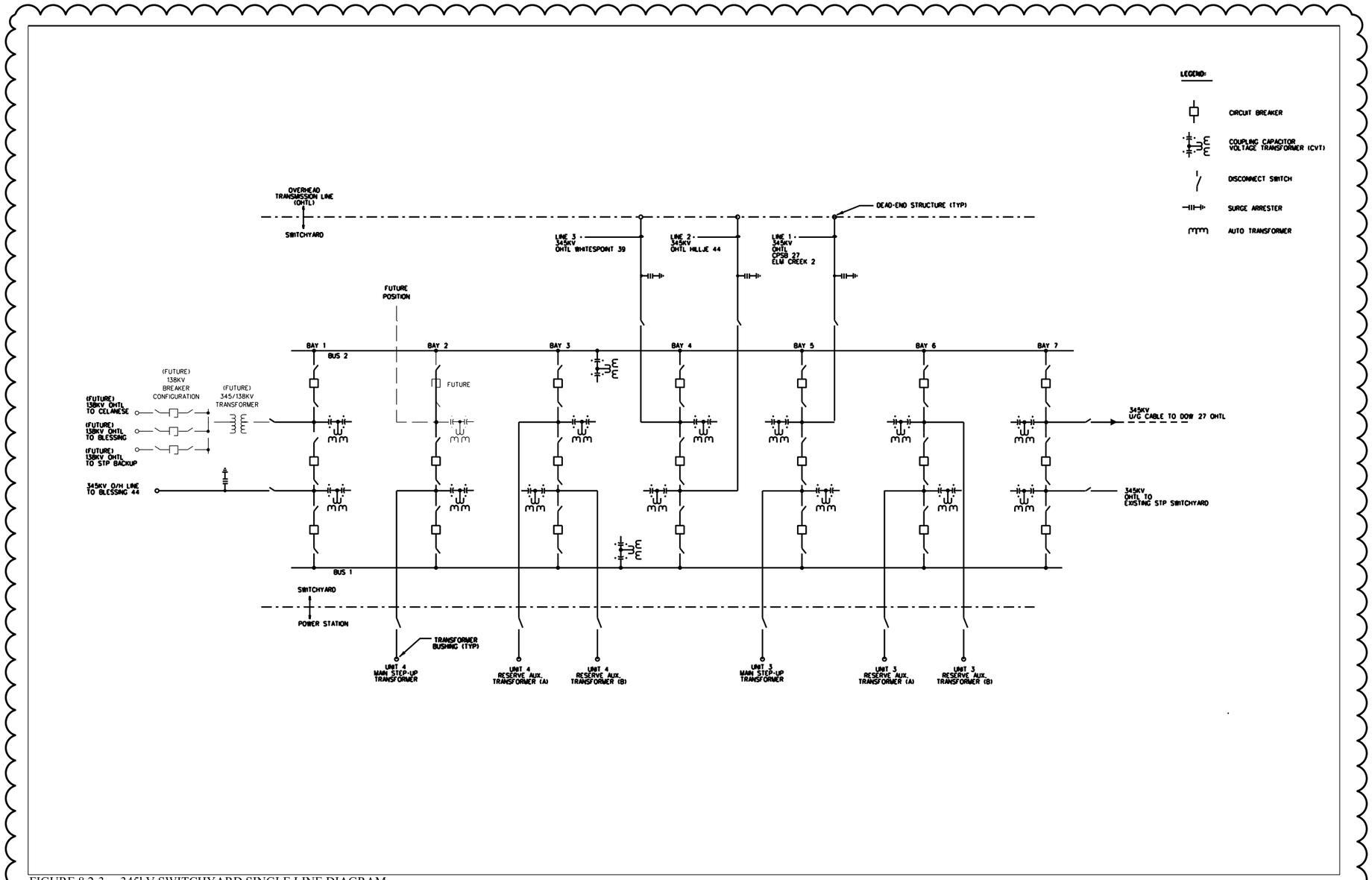

FIGURE 8.2-3 345kV SWITCHYARD SINGLE LINE DIAGRAM

Figure 8.2-3 – 345 kV Switchyard Single Line Diagram

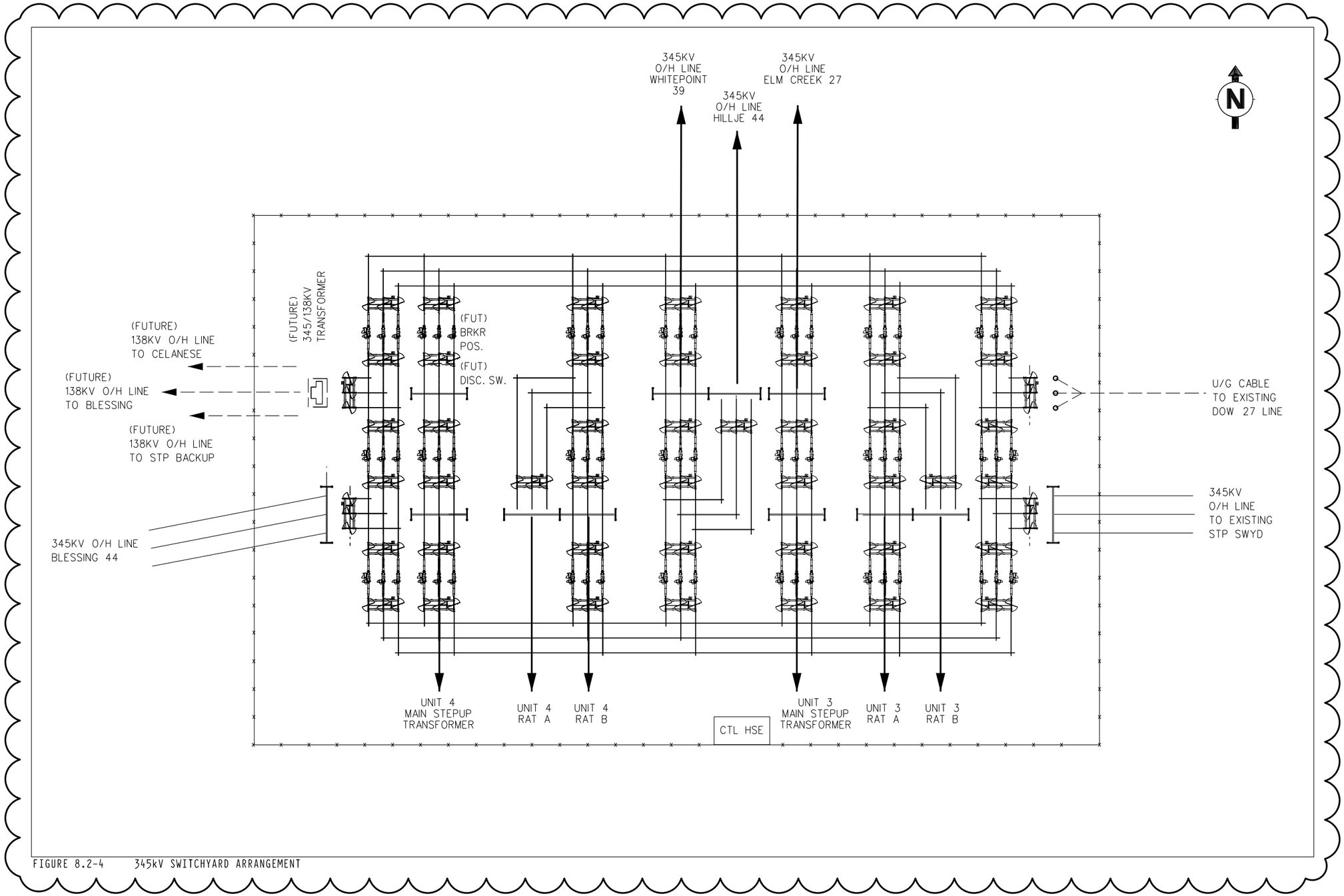

Figure 8.2-4 – 345 kV Switchyard Arrangement

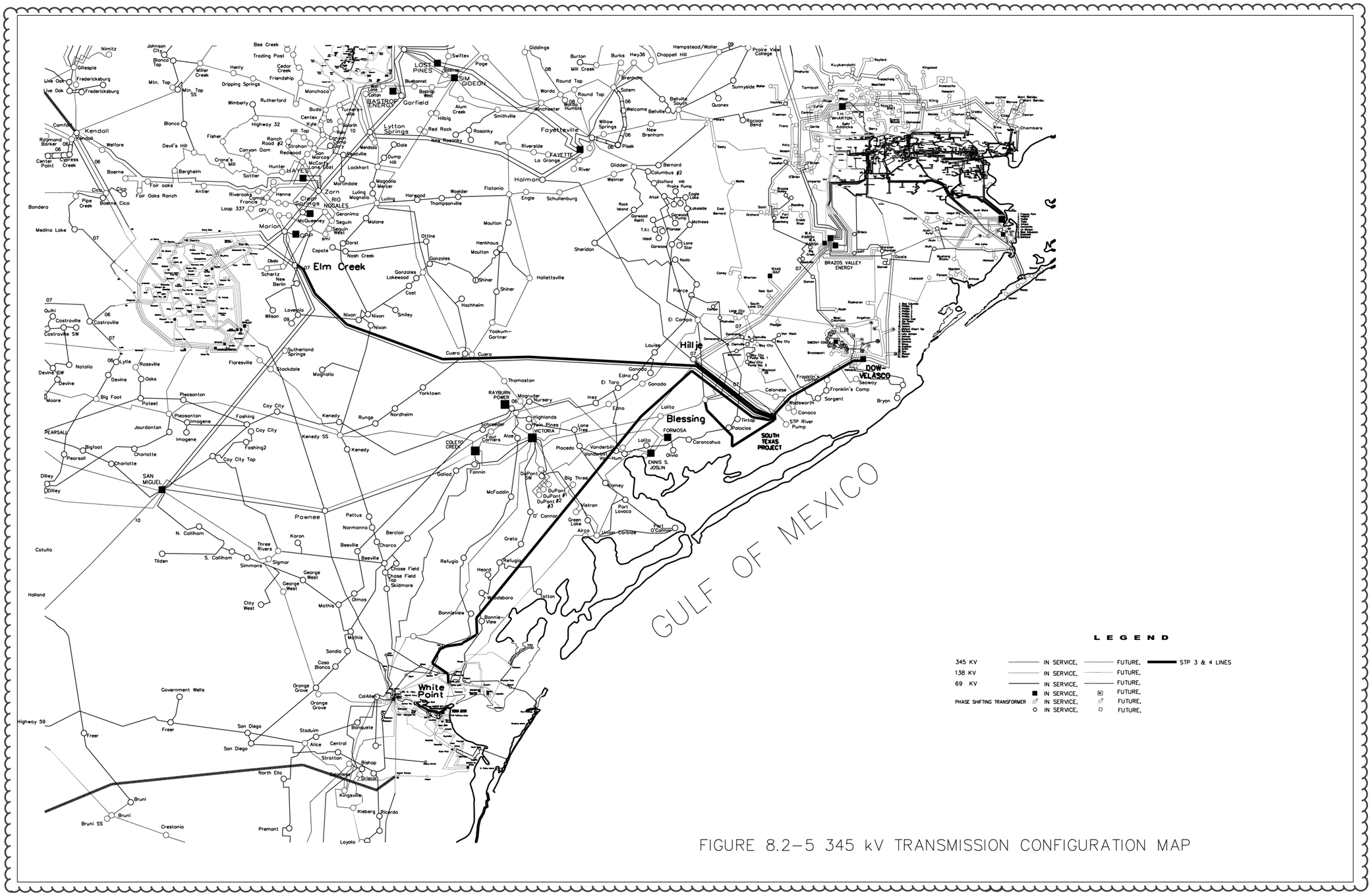

Figure 8.2-5 – 345 kV Transmission Configuration Map

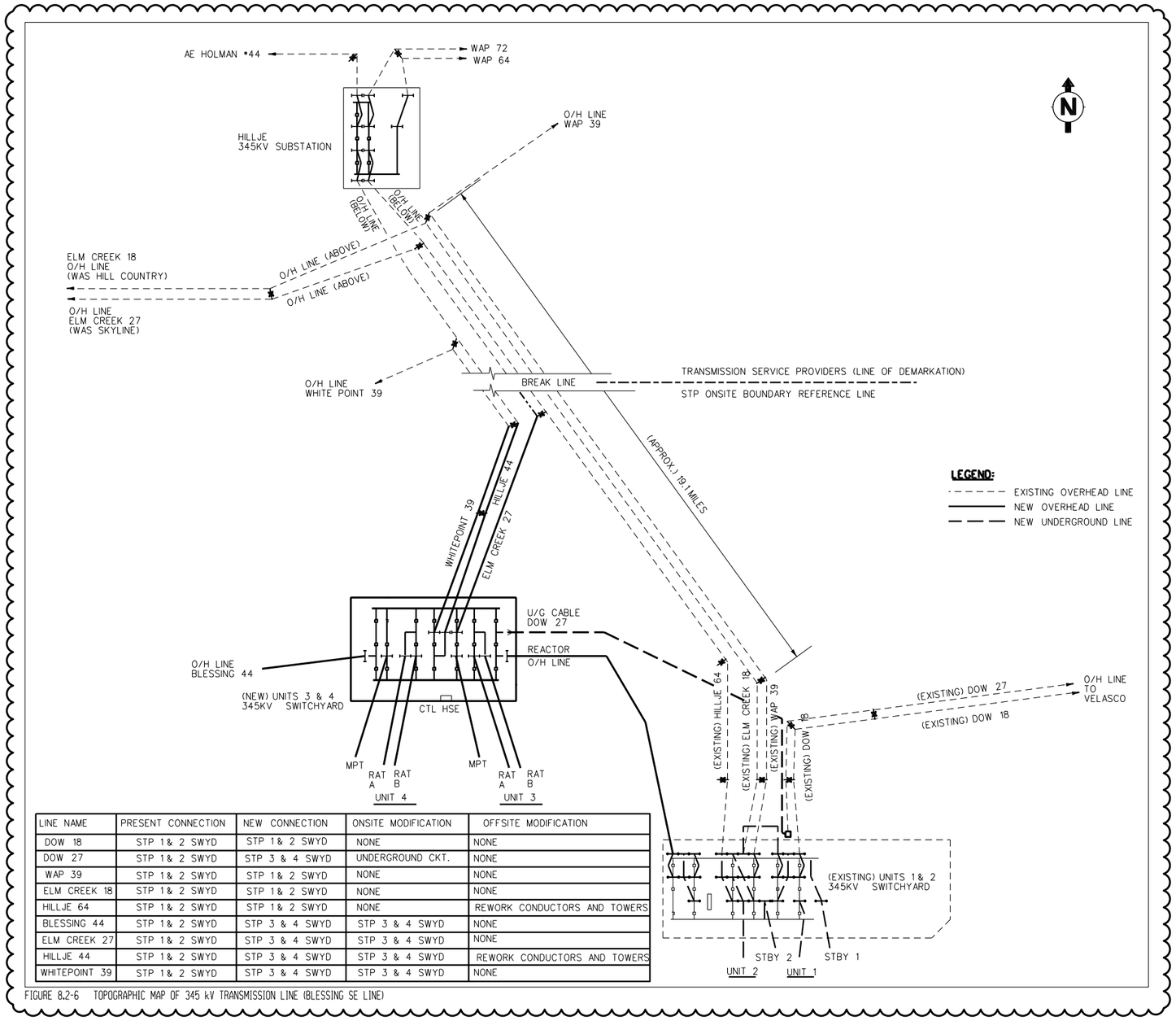

LINE NAME	PRESENT CONNECTION	NEW CONNECTION	ONSITE MODIFICATION	OFFSITE MODIFICATION
DOW 18	STP 1& 2 SWYD	STP 1& 2 SWYD	NONE	NONE
DOW 27	STP 1& 2 SWYD	STP 3 & 4 SWYD	UNDERGROUND CKT.	NONE
WAP 39	STP 1& 2 SWYD	STP 1& 2 SWYD	NONE	NONE
ELM CREEK 18	STP 1& 2 SWYD	STP 1& 2 SWYD	NONE	NONE
HILLJE 64	STP 1& 2 SWYD	STP 1& 2 SWYD	NONE	REWORK CONDUCTORS AND TOWERS
BLESSING 44	STP 1& 2 SWYD	STP 3 & 4 SWYD	STP 3 & 4 SWYD	NONE
ELM CREEK 27	STP 1& 2 SWYD	STP 3 & 4 SWYD	STP 3 & 4 SWYD	NONE
HILLJE 44	STP 1& 2 SWYD	STP 3 & 4 SWYD	STP 3 & 4 SWYD	REWORK CONDUCTORS AND TOWERS
WHITEPOINT 39	STP 1& 2 SWYD	STP 3 & 4 SWYD	STP 3 & 4 SWYD	NONE

FIGURE 8.2-6 TOPOGRAPHIC MAP OF 345 kV TRANSMISSION LINE (BLESSING SE LINE)

Figure 8.2-6 – Topographic Map of 345 kV Transmission Line (Blessing SE Line)

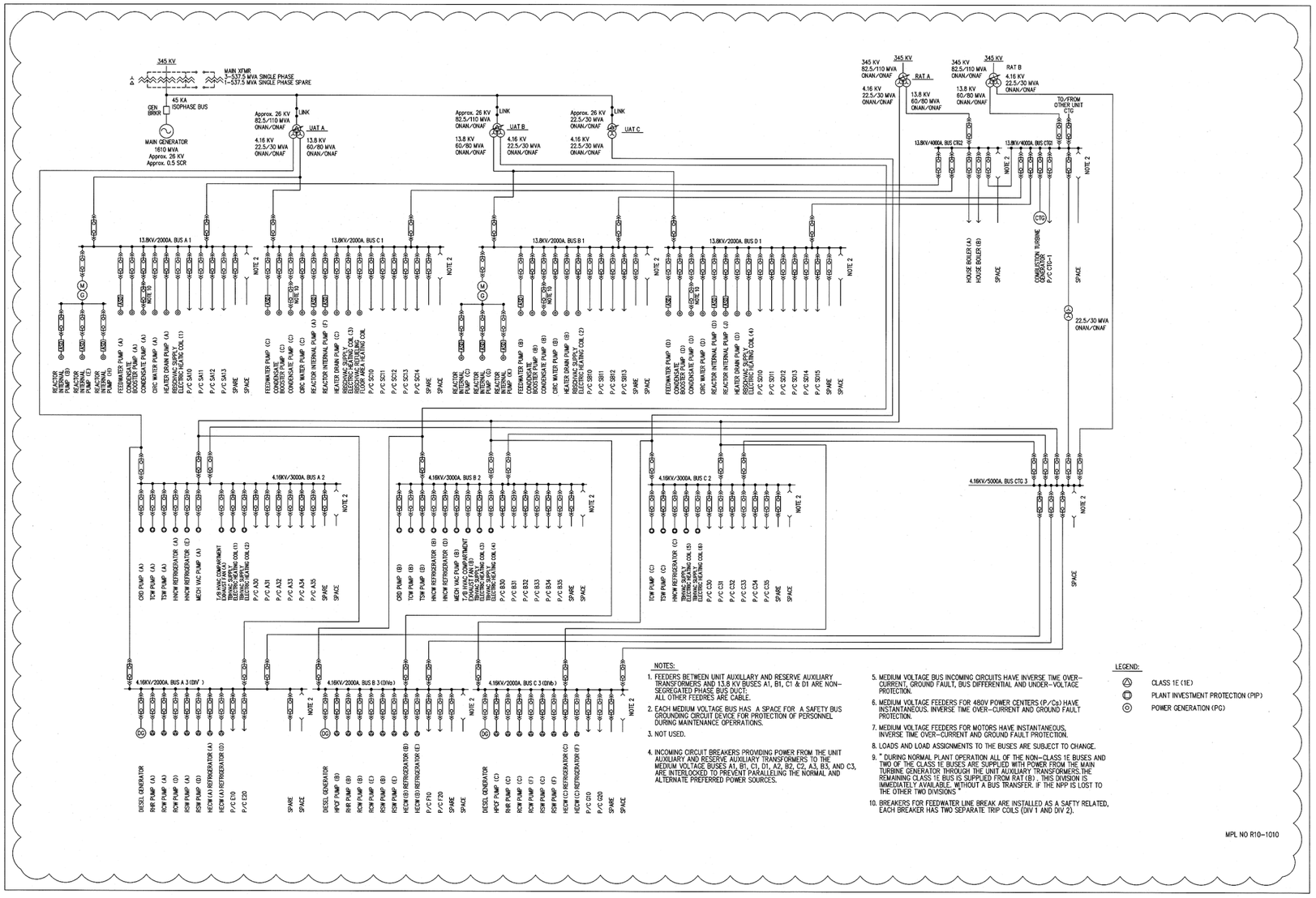

Figure 8.3-1 – Electrical Power Distribution System Single Line Diagram (Sheet 1 of 4)

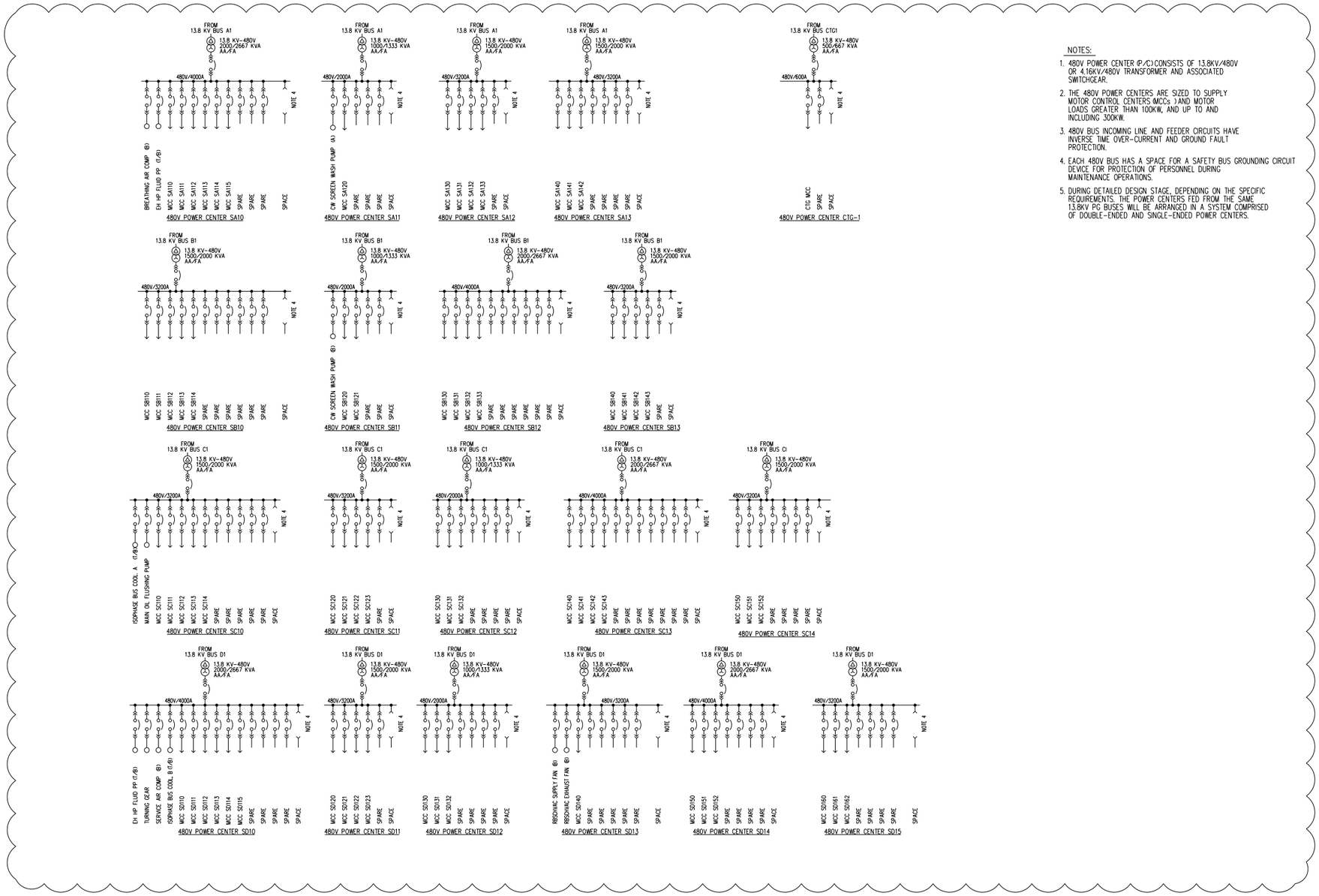

Figure 8.3-1 – Electrical Power Distribution System Single Line Diagram (Sheet 2 of 4)

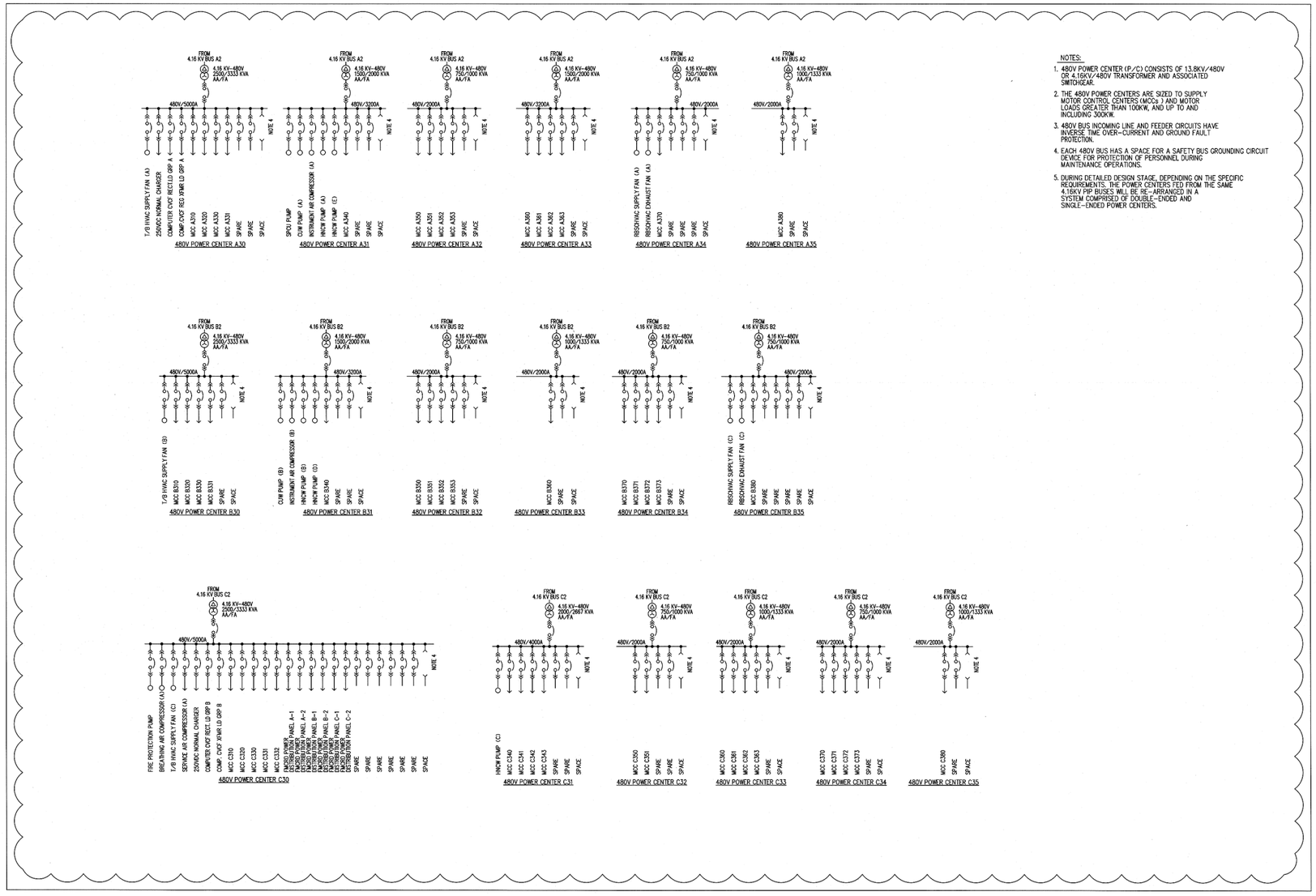

Figure 8.3-1 – Electrical Power Distribution System Single Line Diagram (Sheet 3 of 4)

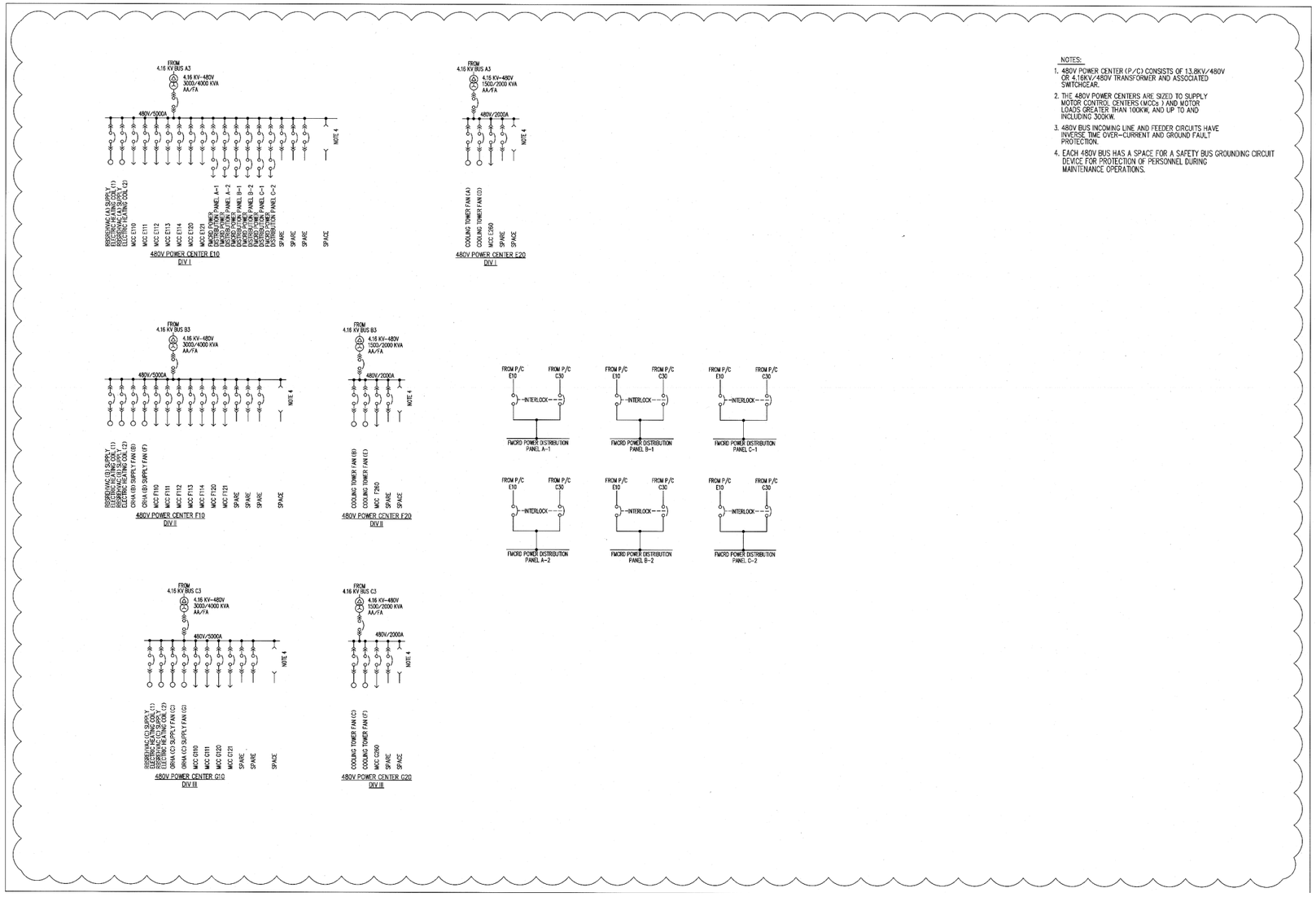

Figure 8.3-1 – Electrical Power Distribution System Single Line Diagram (Sheet 4 of 4)

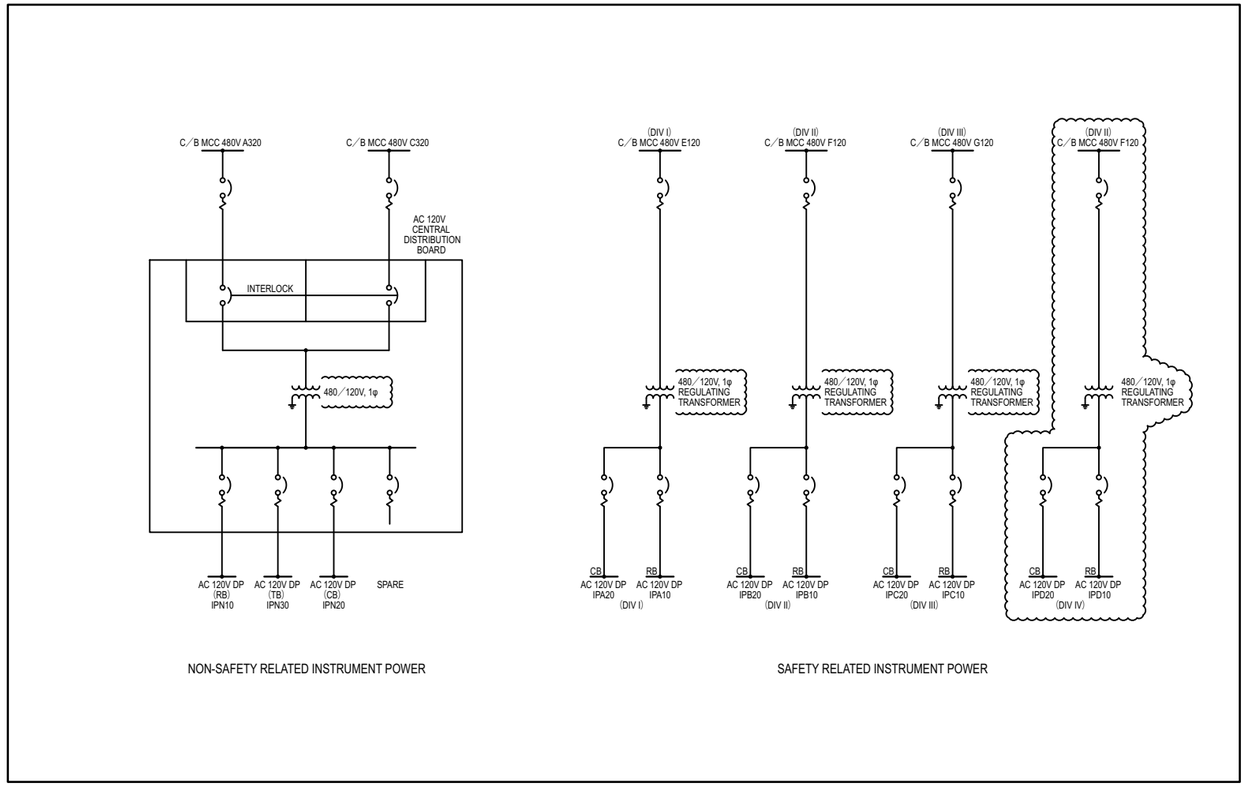

Figure 8.3-2 – Instrument and Control Power Supply System Single Line Diagram (Sheet 1 of 1)