TABLE 1: ANNUNCIATORS/ALARM LIGHTS

INDICATION	FUNCTION	SOURCE OF SIGNAL
ALARM	LOW REACTOR WATER LEVEL 1.5	LOGIC OUTPUT
ALARM	HIGH DRYWELL PRESSURE	LOGIC OUTPUT
ALARM	HPCF PUMP MOTOR OVERLOAD LOOP B	M/C HPCF PUMP B POWER FAILURE
ALARM	HPCF PUMP MOTOR OVERLOAD LOOP C	M/C HPCF PUMP C POWER FAILURE
ALARM	OVERLOAD ANY HPCF VLV MOTOR LOOP B	MOTOR CONTROL CENTER
ALARM	OVERLOAD ANY HPCF VLV MOTOR LOOP C	MOTOR CONTROL CENTER
ALARM	HPCF LOOP B MANUAL INITIATION ARMED	PBS
ALARM	HPCF LOOP C MANUAL INITIATION ARMED	PBS
ALARM	HIGH REACTOR WATER LEVEL 8	LOGIC OUTPUT
ALARM	HPCF LOOP B INITIATED	LOGIC OUTPUT
ALARM	HPCF LOOP C AUTO INITIATION	LOGIC OUTPUT
ALARM	HPCF LOOP B OUT OF SERVICE	LOGIC OUTPUT, COS
ALARM	HPCF LOOP C OUT OF SERVICE	LOGIC OUTPUT, COS
ALARM	HPCF PUMP B LOW-LOW SUCTION PRESSURE	PSZ603B
ALARM	HPCF PUMP C LOW-LOW SUCTION PRESSURE	PSZ603C (NOT HARDWIRED)
ALARM	HPCF PUMP B DISCHARGE LINE NOT FILLED	PSZ602B-2
ALARM	HPCF PUMP B HIGH SUCTION PRESSURE	PSZ602B-1
ALARM	HPCF PUMP C DISCHARGE LINE NOT FILLED	PSZ602C-2
ALARM	HPCF PUMP C HIGH SUCTION PRESSURE	PSZ602C-1
WHITE LIGHT	HPCF PUMP B MANUAL OVERRIDE	LOGIC OUTPUT, CS
WHITE LIGHT	HPCF PUMP C MANUAL OVERRIDE OF AUTO INITIATION	LOGIC OUTPUT, CS
WHITE LIGHT	HPCF INJECTION VALVE F003B MANUAL OVERRIDE	LOGIC OUTPUT, CS
WHITE LIGHT	HPCF INJECTION VALVE F003C MANUAL OVERRIDE OF AUTO INITIATION	LOGIC OUTPUT, CS
WHITE LIGHT	HPCF LOOP B INITIATION SEALED-IN	LOGIC OUTPUT
WHITE LIGHT	HPCF LOOP C AUTO INITIATION SEALED-IN	LOGIC OUTPUT
ALARM	HPCF C MANUAL INITIATION (DIVERSE)	LOGIC OUTPUT
ALARM	HPCF C PUMP C LOW-LOW SUCTION PRESSURE	PS603C (HARDWIRED)
WHITE LIGHT	HPCF C MANUAL INITIATION SEALED-IN	LOGIC OUTPUT
WHITE LIGHT	HPCF C INJECTION VALVE F003C MANUAL OVERRIDE OF (DIVERSE) MANUAL INITIATION	LOGIC OUTPUT, CS (DIVERSE)

TABLE 1: ANNUNCIATORS/ALARM LIGHTS (CONT'D)

INDICATION	FUNCTION	SOURCE OF SIGNAL
ALARM	HPCF LOOP B LOW CST WATER LEVEL	LOGIC OUTPUT
ALARM	HPCF LOOP B HIGH SUPPR POOL WATER LEVEL	LOGIC OUTPUT
ALARM	HPCF LOOP C LOW CST WATER LEVEL	LOGIC OUTPUT
ALARM	HPCF LOOP C HIGH SUPPR POOL WATER LEVEL	LOGIC OUTPUT
WHITE LIGHT	HPCF LOOP B HIGH REACTOR WATER LEVEL 8 SEALED-IN	LOGIC OUTPUT
WHITE LIGHT	HPCF LOOP C HIGH REACTOR WATER LEVEL 8 SEALED-IN	LOGIC OUTPUT
ALARM	HPCF LOOP B PUMP CONTROL SW IN PULL LOCK	PULL LOCK
ALARM	HPCF LOOP C PUMP CONTROL SW IN PULL LOCK	PULL LOCK
ALARM	HPCF LOOP B LOSS OF LOGIC POWER SOURCE	LOGIC OUTPUT
ALARM	HPCF LOOP C LOSS OF LOGIC POWER SOURCE	LOGIC OUTPUT
ALARM	HPCF LOOP B TESTING	CS
ALARM	HPCF LOOP C TESTING	CS
ALARM	HPCF PUMP B TRIP	LOGIC OUTPUT
ALARM	HPCF PUMP C TRIP	LOGIC OUTPUT
ALARM	EMERGENCY CONTAINMENT FLOODING-CST/SP SUCTION TRANSFER OVERRIDE LOOP B	KOS
ALARM	EMERGENCY CONTAINMENT FLOODING-CST/SP SUCTION TRANSFER OVERRIDE LOOP C	KOS
ALARM	MCC EQUIPMENT IN TEST MODE (THERMAL RELAY NOT BYPASSED) FOR LOOP B	KOS
ALARM	MCC EQUIPMENT IN TEST MODE (THERMAL RELAY NOT BYPASSED) FOR LOOP C	KOS
ALARM	HPCF LOOP B FLOW LOW	FIS-Z608B, PS-Z607B
ALARM	HPCF LOOP C FLOW LOW	FIS-Z608C, PS-Z607C

Figure 7.3-1 – High Pressure Core Flooder System IBD (Sheet 2 of 17)

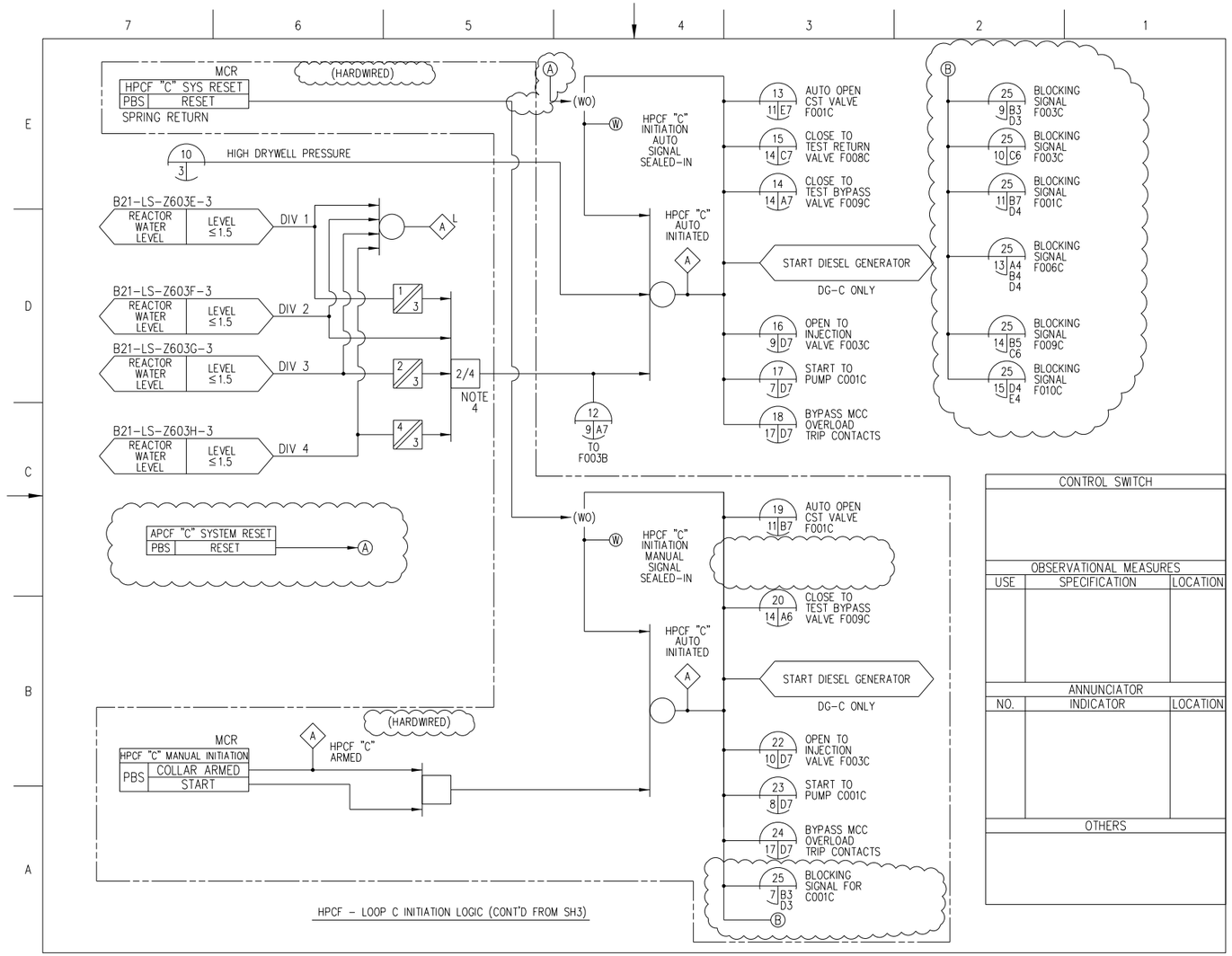

Figure 7.3-1 High Pressure Core Flooder System IBD (Sheet 5 of 17)

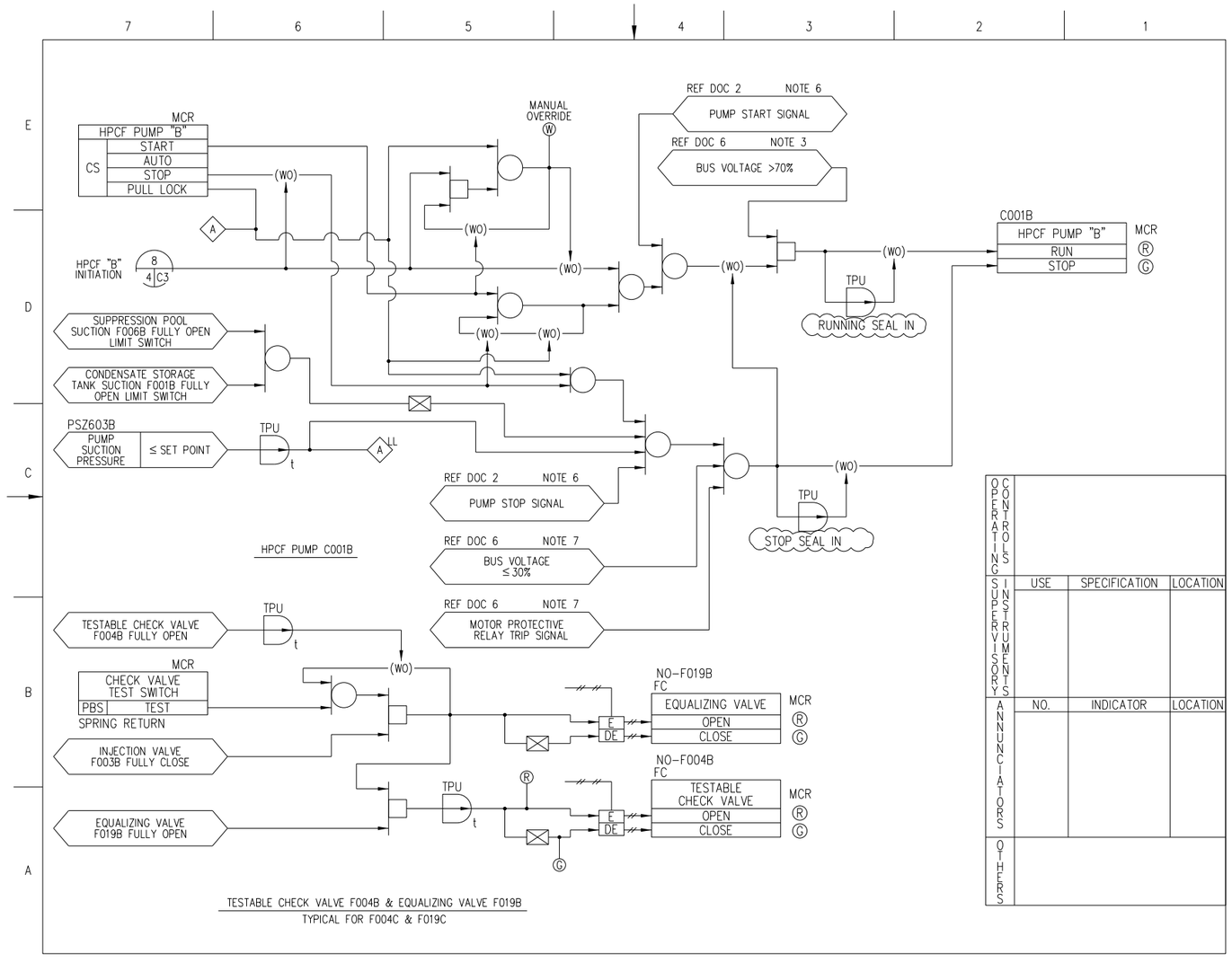

Figure 7.3-1 – High Pressure Core Flooder System IBD (Sheet 6 of 17)

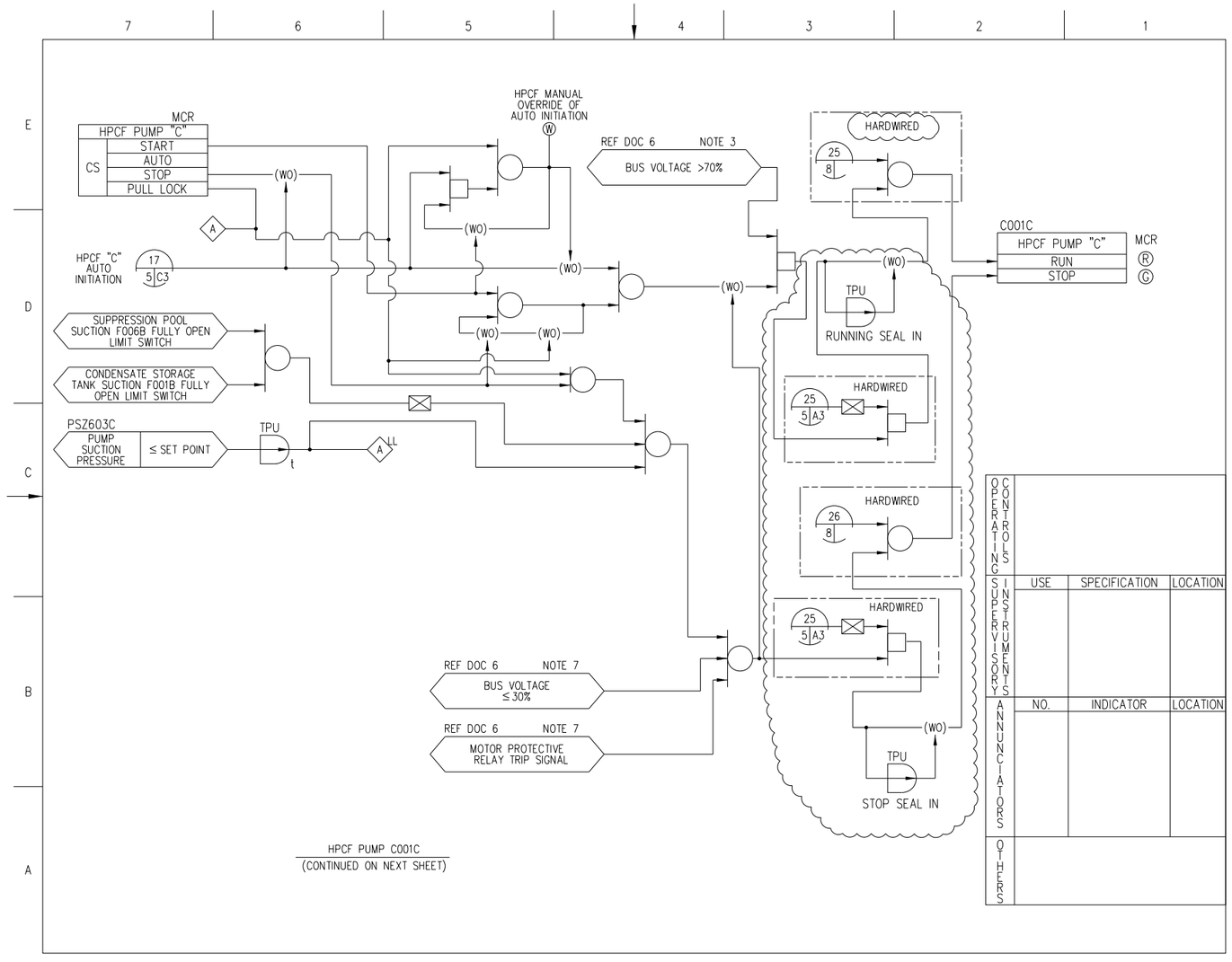

Figure 7.3-1 – High Pressure Core Flooder System IBD (Sheet 7 of 17)

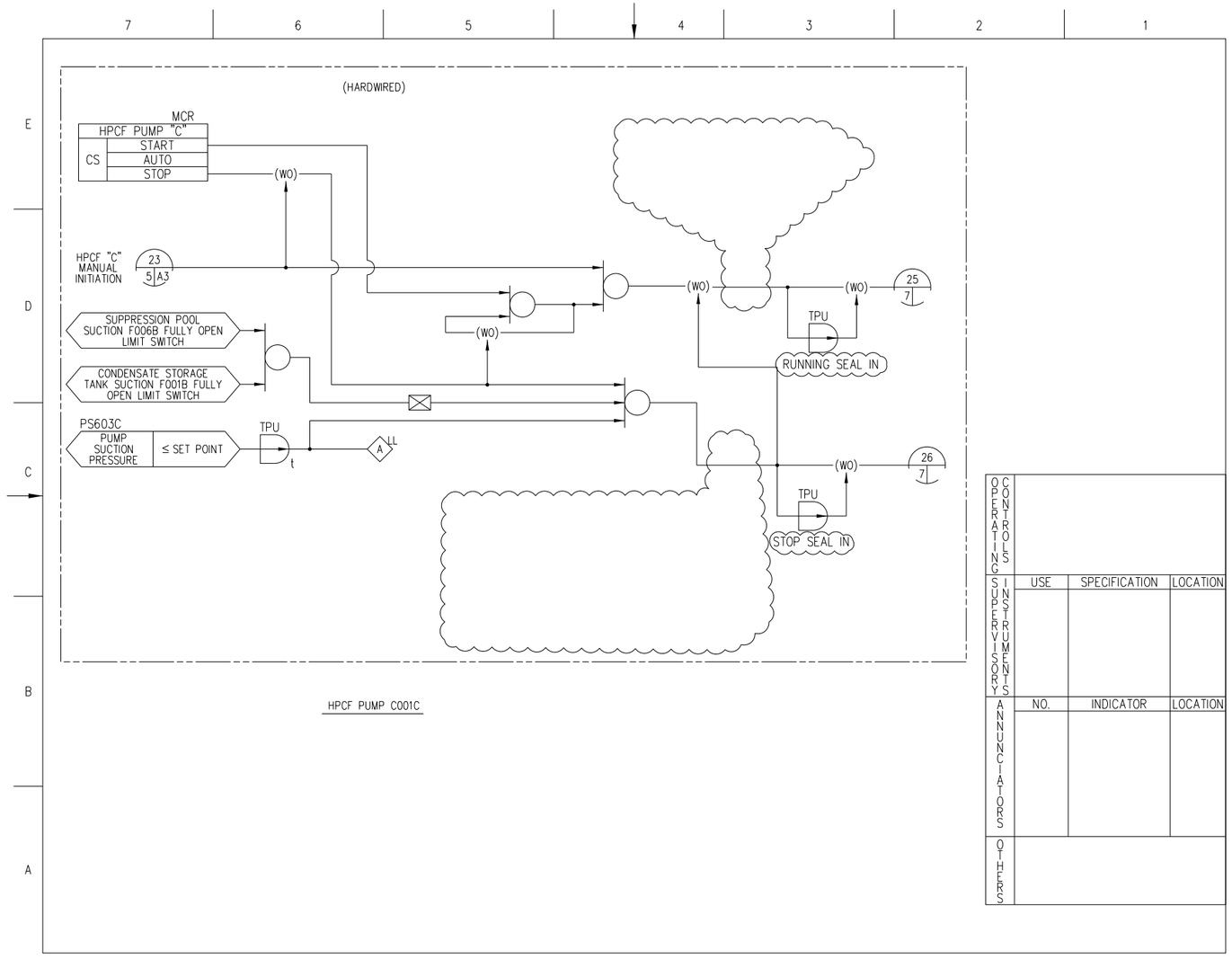

Figure 7.3-1 – High Pressure Core Flooder System IBD (Sheet 8 of 17)

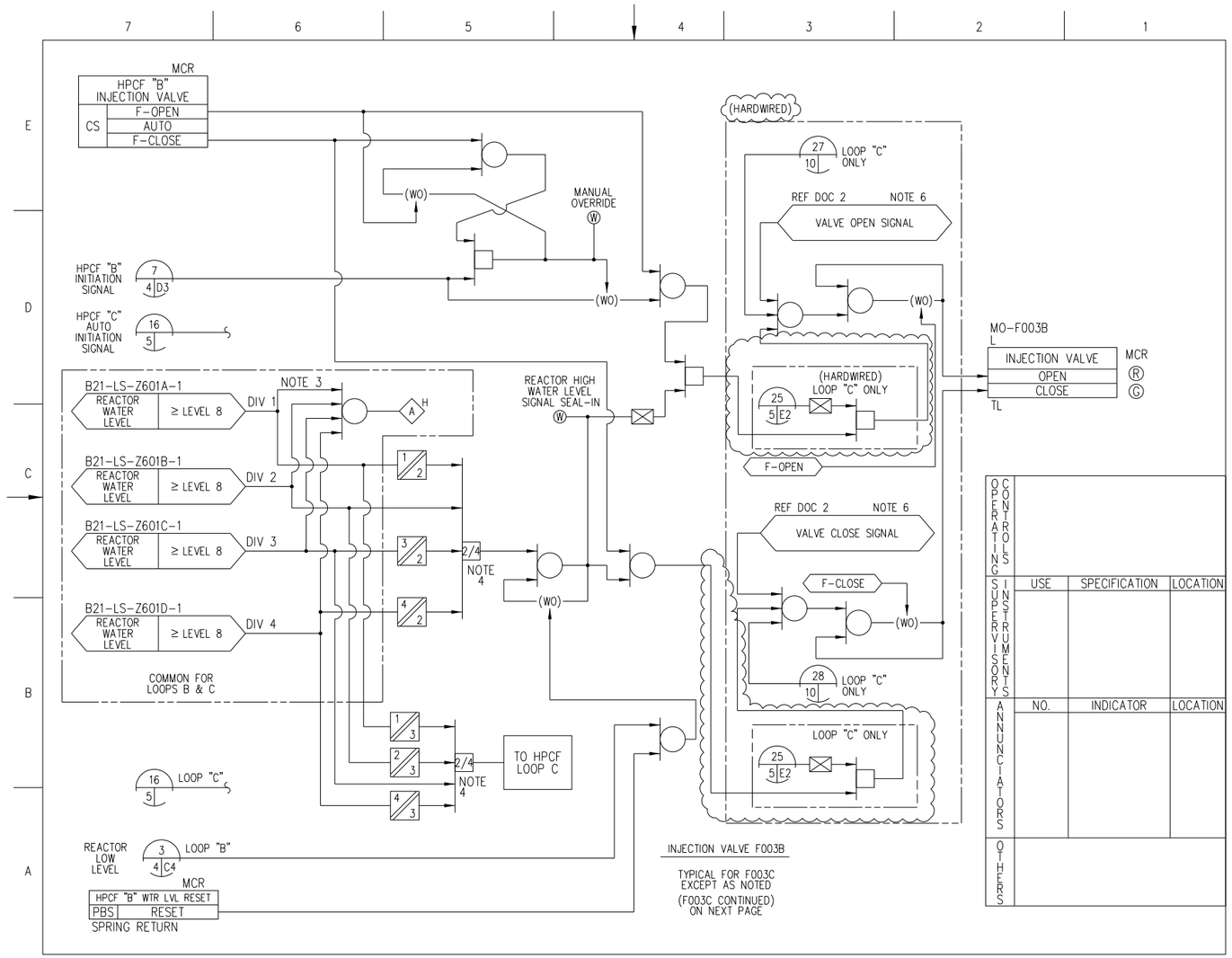

Figure 7.3-1 – High Pressure Core Flooder System IBD (Sheet 9 of 17)

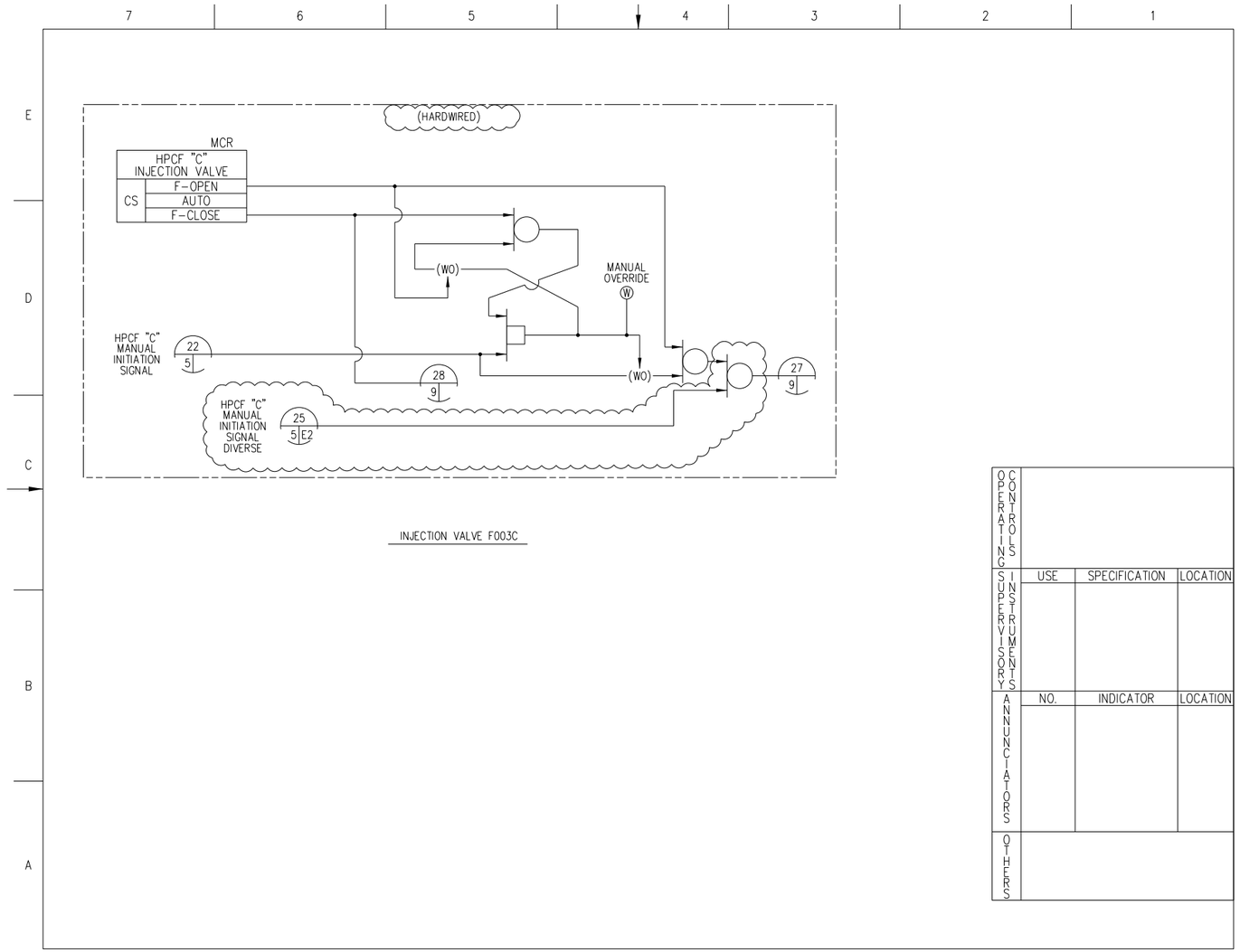

Figure 7.3-1 – High Pressure Core Flooder System IBD (Sheet 10 of 17)

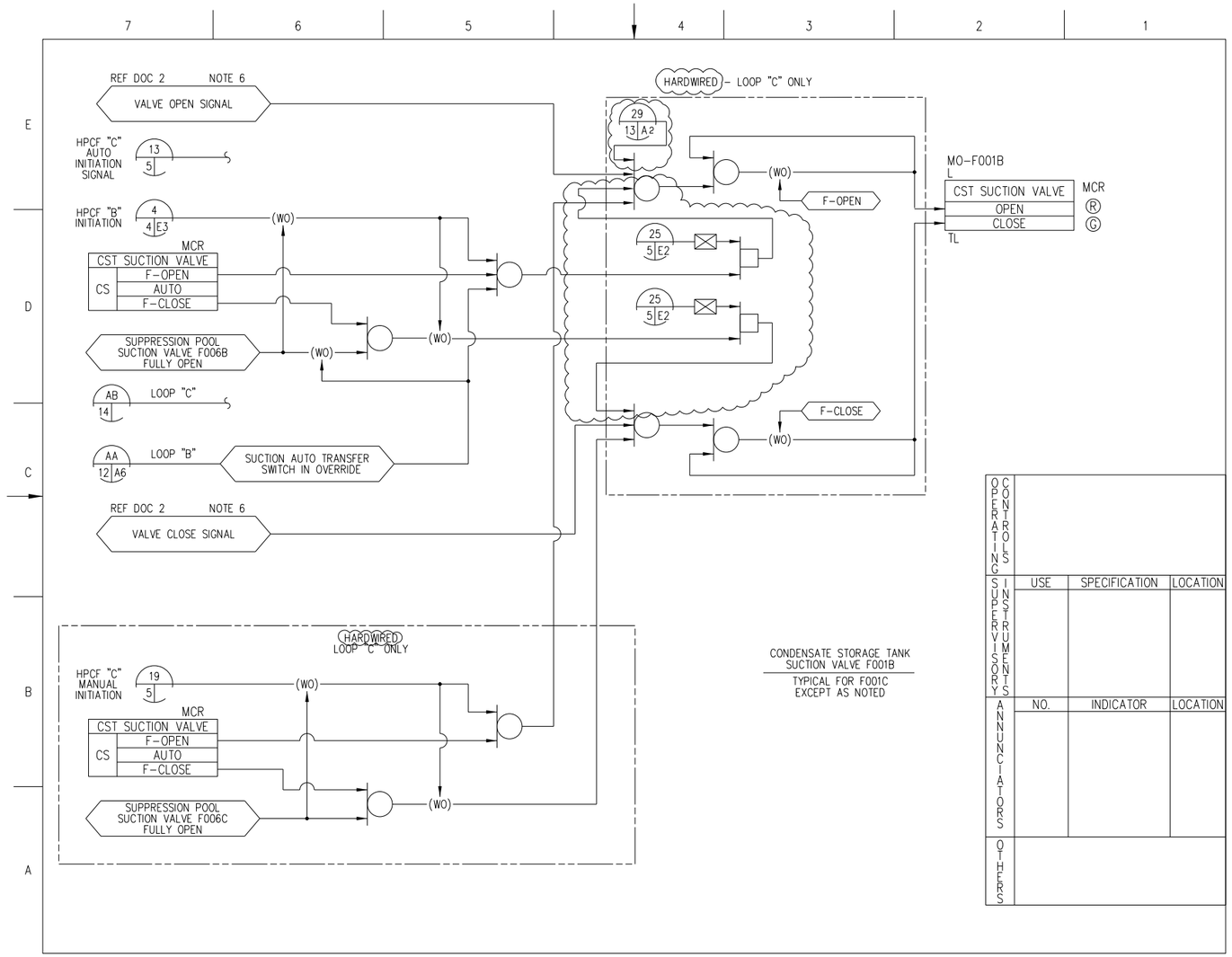

Figure 7.3-1 – High Pressure Core Flooder System IBD (Sheet 11 of 17)

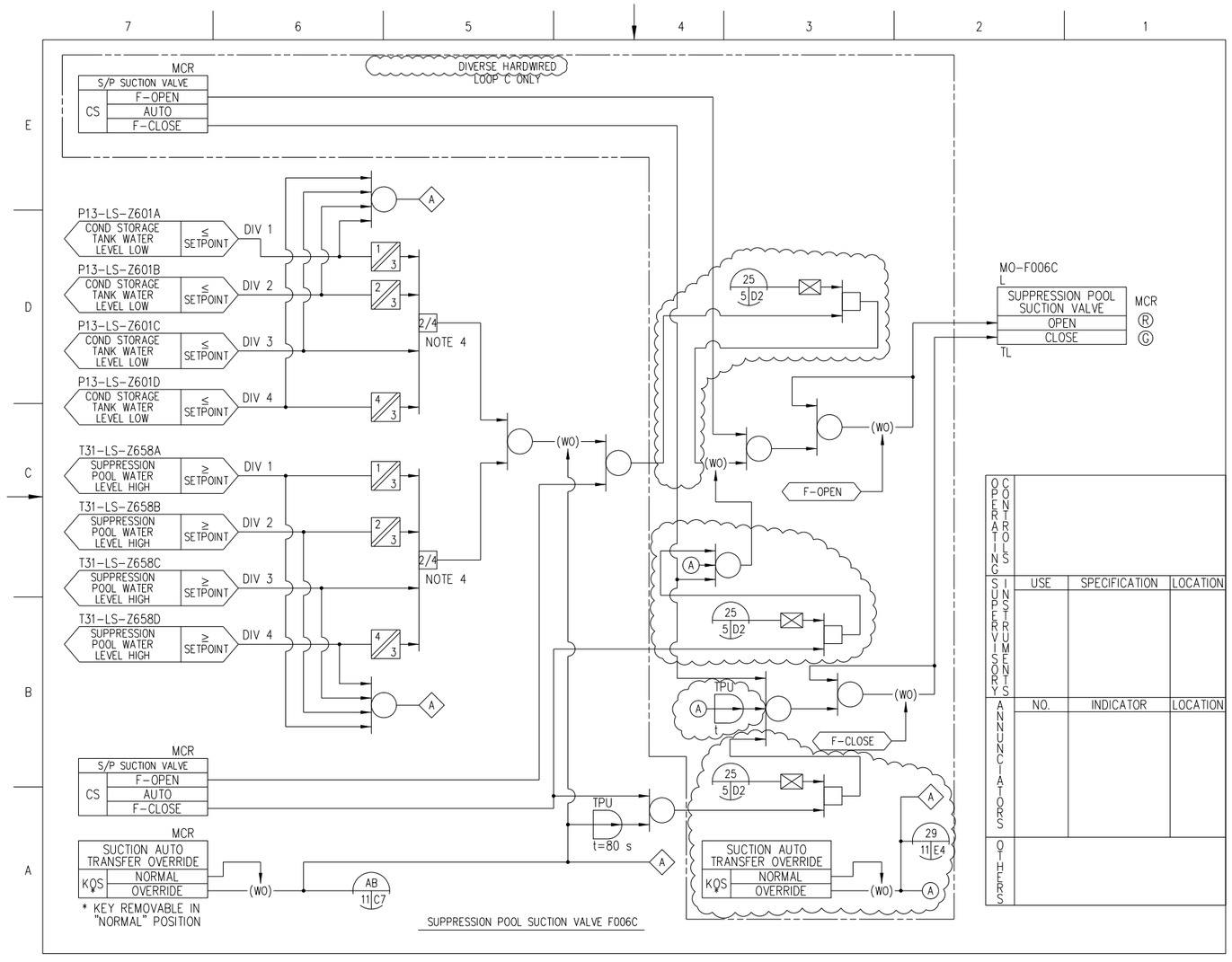

Figure 7.3-1 – High Pressure Core Flooder System IBD (Sheet 13 of 17)

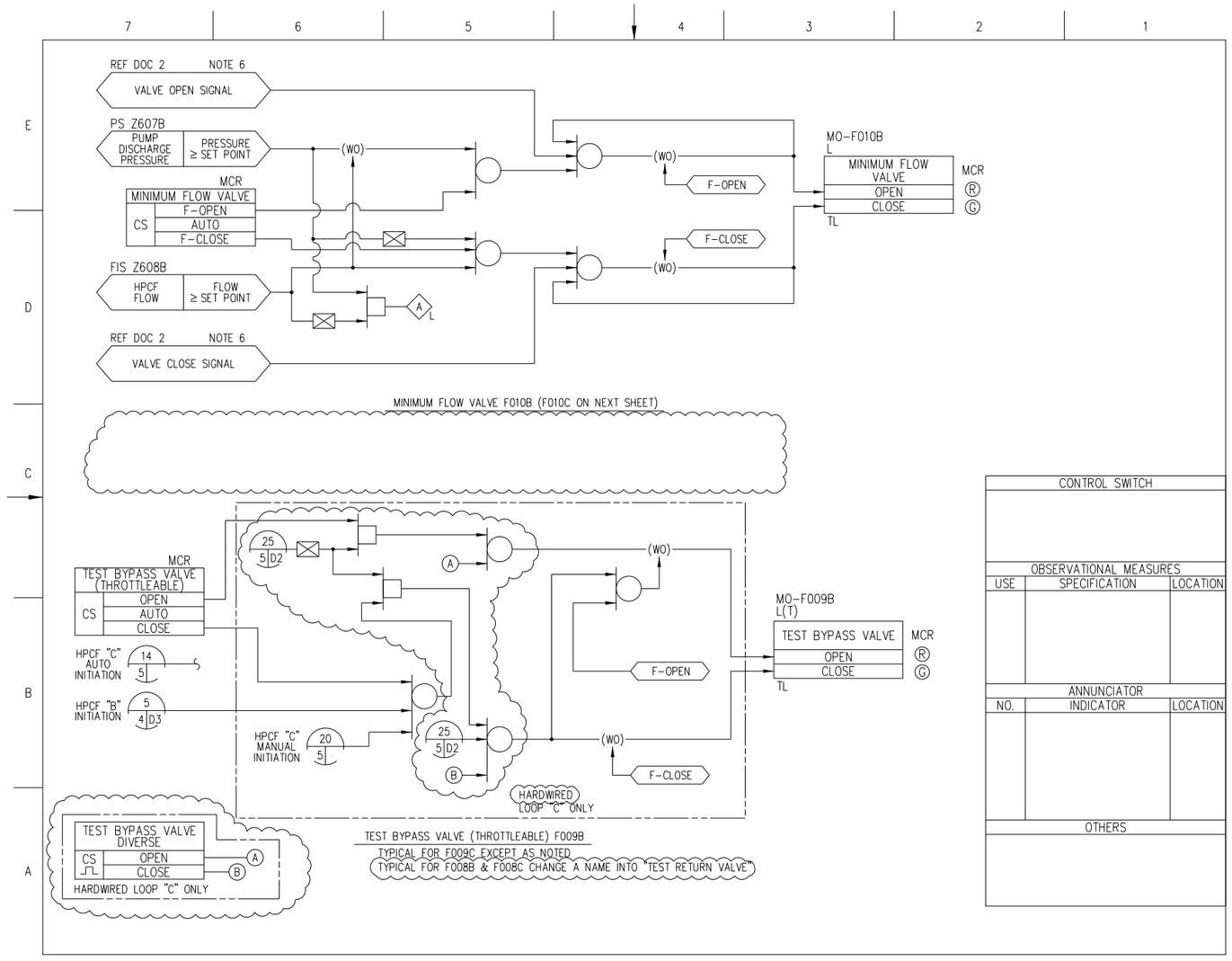

Figure 7.3-1 – High Pressure Core Flooder System IBD (Sheet 14 of 17)

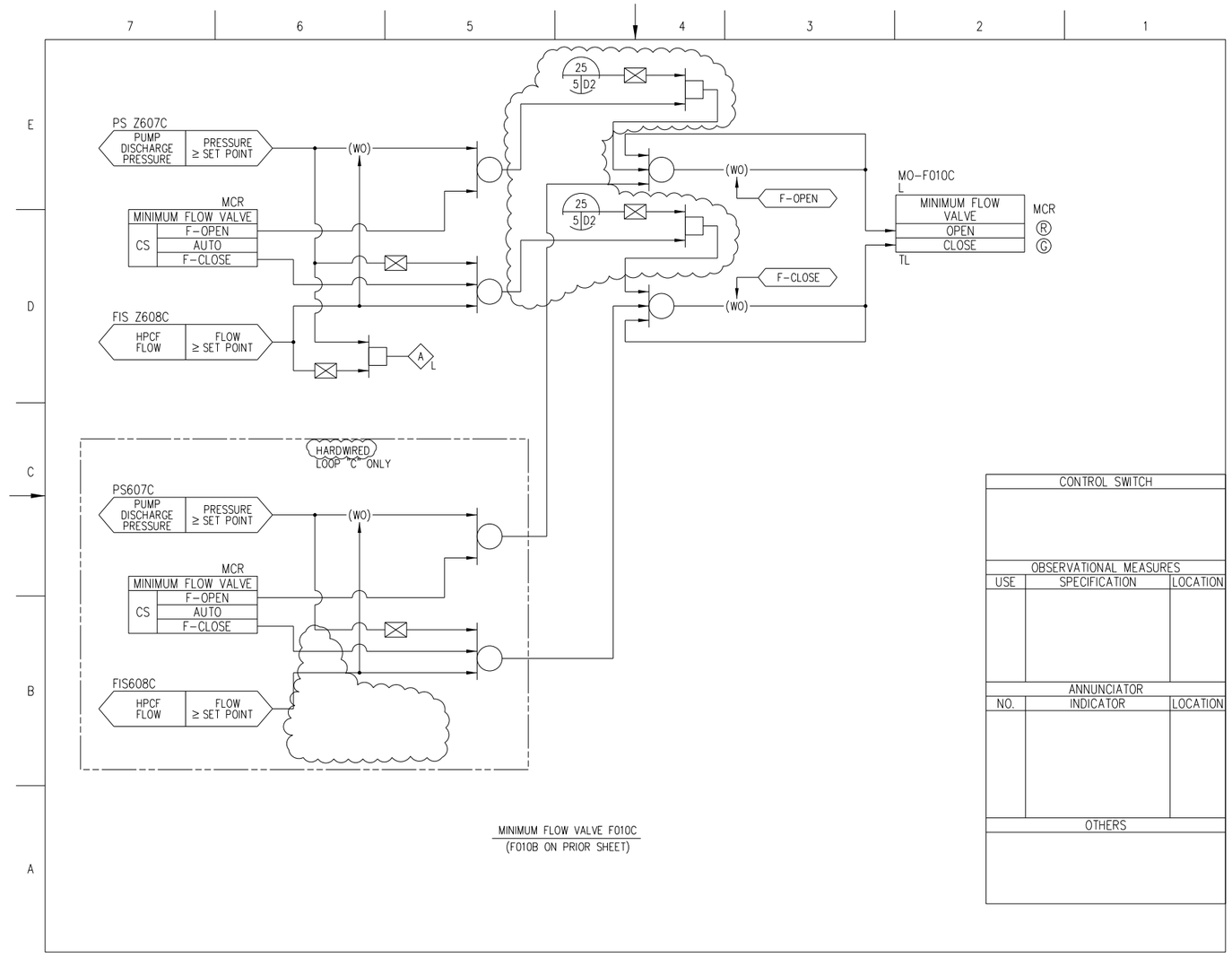

Figure 7.3-1 – High Pressure Core Flooder System IBD (Sheet 15 of 17)

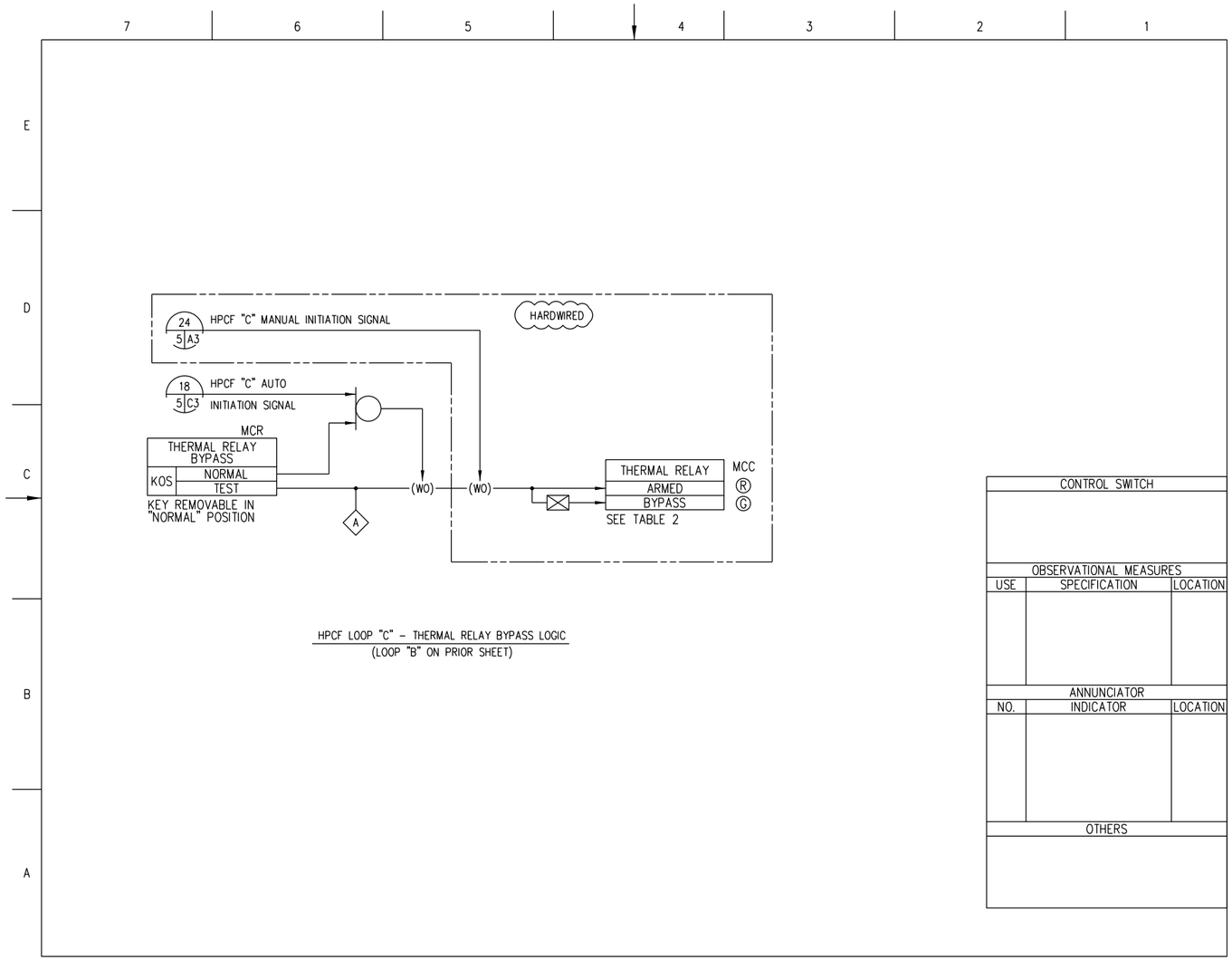

FIGURE 7.3–1 HIGH PRESSURE CORE FLOODER SYSTEM IBD (Sheet 17 of 17)
STP 3 & 4 Rev.2

Figure 7.3-1 – High Pressure Core Flooder System IBD (Sheet 17 of 17)

SH. NO.	TITLES
1	CONTENTS
2	NOTES AND REFERENCES
3	SRV LOGIC AND CONTROL DIVISION 1 FOR SRV F010P
4	SRV LOGIC AND CONTROL DIVISION 2 FOR SRV F010J
5	SRV LOGIC AND CONTROL DIVISION 3(2,3) FOR SRV'S F010M(F010S, F010B)
6	SRV LOGIC AND CONTROL DIVISION 1 FOR SRV F010G
7	SRV LOGIC AND CONTROL DIVISION 1 FOR SRV F010K
8	SRV LOGIC AND CONTROL DIVISIONS 2(3,1) FOR SRV'S F010E(F010U, F010D)
9	SRV LOGIC AND CONTROL DIVISIONS 2(3,1,2) FOR SRV'S F010N(F010H, F010T, F010C)
10	SRV LOGIC AND CONTROL DIVISIONS 3(1,2,3) FOR SRV'S F010L(F010F, F010R, F010A)
11	ADS LOGIC AND CONTROL
12	ADS LOGIC AND CONTROL (CONTINUED)
13	ADS LOGIC AND CONTROL (CONTINUED)
14	ADS LOGIC AND CONTROL (CONTINUED)
15	ADS LOGIC AND CONTROL (CONTINUED)
16	ADS LOGIC AND CONTROL (CONTINUED)
17	ADS LOGIC AND CONTROL (CONTINUED)
18	ADS LOGIC AND CONTROL (CONTINUED)
19	FEEDWATER VALVES F001A(F001B)
20	FEEDWATER CHECK VALVES F003A(F003B)
21	FEEDWATER GATE VALVES F005A(F005B)
22	CUW RETURN FW LOOP SELECTOR VALVES F007A(F007B)
23	MAIN STEAM BYPASS/DRAIN ISOLATION VALVE F011(F012)
24	STEAM LINE DRAIN VALVES F013(F014, F016)
25	MAIN STEAM DRAIN LINE AOV'S F015(F017)
26	RPV HEAD VENT VALVES F018(F019, F020)
27	RPV WATER LEVEL ALARMS AND INDICATORS
28	LOW RPV METAL & BOTTOM DRAIN TEMPERATURE ALARM & RECORDER
29	HIGH DRYWELL PRESSURE ALARMS AND INDICATORS
30	SRV VALVE STEM POSITION ALARM
31	SRV DISCHARGE LINE AND RPV VENT DISCHARGE LINE HIGH TEMP ALARM
32	MSIV VALVE STEM POSITION SWITCHES
33	RPV HEAD SEAL LEAKOFF HIGH PRESSURE ALARM
34	ANNUNCIATOR LIST
35	ANNUNCIATOR LIST (CONTINUED)
36	ELCS (LDS/ECCS) BLOCK DIAGRAM DIV 1 (TYPICAL FOR DIV 2 & DIV 3)
37	ELCS (LDS/ECCS) BLOCK DIAGRAM (CONTINUED)

MPL NO. B21-1030

CONTENTS

Figure 7.3-2 – Nuclear Boiler System IBD (Sheet 1 of 37)

NOTES:

1. PRESSURES SHALL BE IN MPa g.
2. THE ADS LOAD DRIVERS SHALL BE CONNECTED SO THAT IT IS NECESSARY TO ENERGIZE BOTH ADS CHANNELS TO ACTUATE THE ADS VALVES.
3. PARTS OF THE LOGIC AND CONTROL SYSTEM FOR THE OPERATION OF THE SRV'S IN THE RELIEF MODE ARE CLASSIFIED AS NON-SAFETY RELATED BUT THE TOTAL SYSTEM IS DESIGNED AS A SAFETY RELATED SYSTEM.
4. DIVISION 2 IS THE SAME AS DIVISION 1 EXCEPT THAT DIVISION 2 SUFFIX LETTERS ARE THOSE IDENTIFIED IN PARENTHESES.
5. NUMBERS OR LETTERS IN PARENTHESES DESIGNATE THOSE APPLICABLE TO THE SRV'S WHICH FOLLOW IN SEQUENCE AFTER THE FIRST IN THE GROUP OF 3 OR 4 SRV'S.
6. THE LOGIC SHALL INCORPORATE PROVISIONS TO REVERT 2/4 LOGIC TO 2/3 LOGIC DURING BYPASS OF A SINGLE DIVISION OF SENSORS. ALSO, THE LOGIC DIAGRAM SHALL NOT PERMIT THE BYPASS OF MORE THAN ONE DIVISION OF SENSORS AT A TIME. THE PROVISIONS ARE ILLUSTRATED IN THE ELCS BLOCK DIAGRAM, SH 36, ZONES B4 & C4.
7. ISOLATORS ARE NOT REQUIRED WHERE THE SAME DIVISIONAL LOGIC IS USED FOR BOTH INPUT SIGNALS AND LOGIC.
8. (A) FO IS "FAIL OPEN", FOR EXAMPLE, VALVE OPENS ON LOSS OF POWER AND/OR LOSS OF PNEUMATIC OR HYDRAULIC PRESSURE.

   (B) FC IS "FAIL CLOSED", FOR EXAMPLE, VALVE CLOSES ON LOSS OF POWER AND/OR LOSS OF PNEUMATIC OR HYDRAULIC PRESSURE.
9. SEE TABLE 1 FOR ANNUNCIATOR/ALARM LIGHT INFORMATION, SH 34 & 35.
10. ALL ANNUNCIATORS ARE LOCATED IN THE MAIN CONTROL ROOM UNLESS OTHERWISE NOTED.
12. ADS OUTPUT LOGIC SHALL NOT INCLUDE PROVISIONS TO BYPASS THE DUAL OUTPUTS. SINGLE CHANNEL FAILURE IN ONE ADS DIVISION SHALL CAUSE LOSS OF OUTPUT FUNCTION IN THAT ADS DIVISION ONLY AS SHOWN ON SH 37.
13. MONITOR THE CONTINUITY OF THE SRV ADS SOLENOIDS BY APPLICATION OF A NON-ENERGIZING CURRENT TO EACH SOLENOID.
14. INTERMEDIATE PROCESSOR WHICH PREVENTS THE FAILURE OF THE NON-SAFETY RELATED DATA FROM AFFECTING THE SAFETY RELATED LOGIC.
15. THIS SIGNAL LINE SHALL BE HARDWIRED. INDICATORS REQUIRED TO BE HARDWIRED ARE SHOWN ON THIS DRAWING.
16. SIGNALS TO ANNUNCIATORS AND NON-SAFETY INDICATORS SHALL BE OPTICALLY ISOLATED FROM THE SAFETY RELATED INPUT SIGNAL.

REFERENCE DOCUMENTS UNDER THE FOLLOWING IDENTITIES ARE TO BE USED IN CONJUNCTION WITH THIS DRAWING.

		MPL NO.
1.	NUCLEAR BOILER SYSTEM, P&ID	B21-1010
2.	REMOTE SHUTDOWN SYS, IBD	C61-1030
3.	RESIDUAL HEAT REMOVAL SYSTEM, P&ID	E11-1010
4.	HIGH PRESSURE CORE FLOODER, P&ID	E22-1010
5.	LEAK DETECTION SYSTEM, IBD	E31-1030
6.	REACTOR PROTECTION SYSTEM, IED	C71-1040
7.	TURBINE CONTROL SYSTEM, IBD	N32-1030

SUPPORTING DOCUMENTS		MPL NO.
1.	INTERLOCK BLOCK DIAGRAM (IBD) STANDARD	A10-3070

NOTES AND REFERENCES

Figure 7.3-2 – Nuclear Boiler System IBD (Sheet 2 of 37)

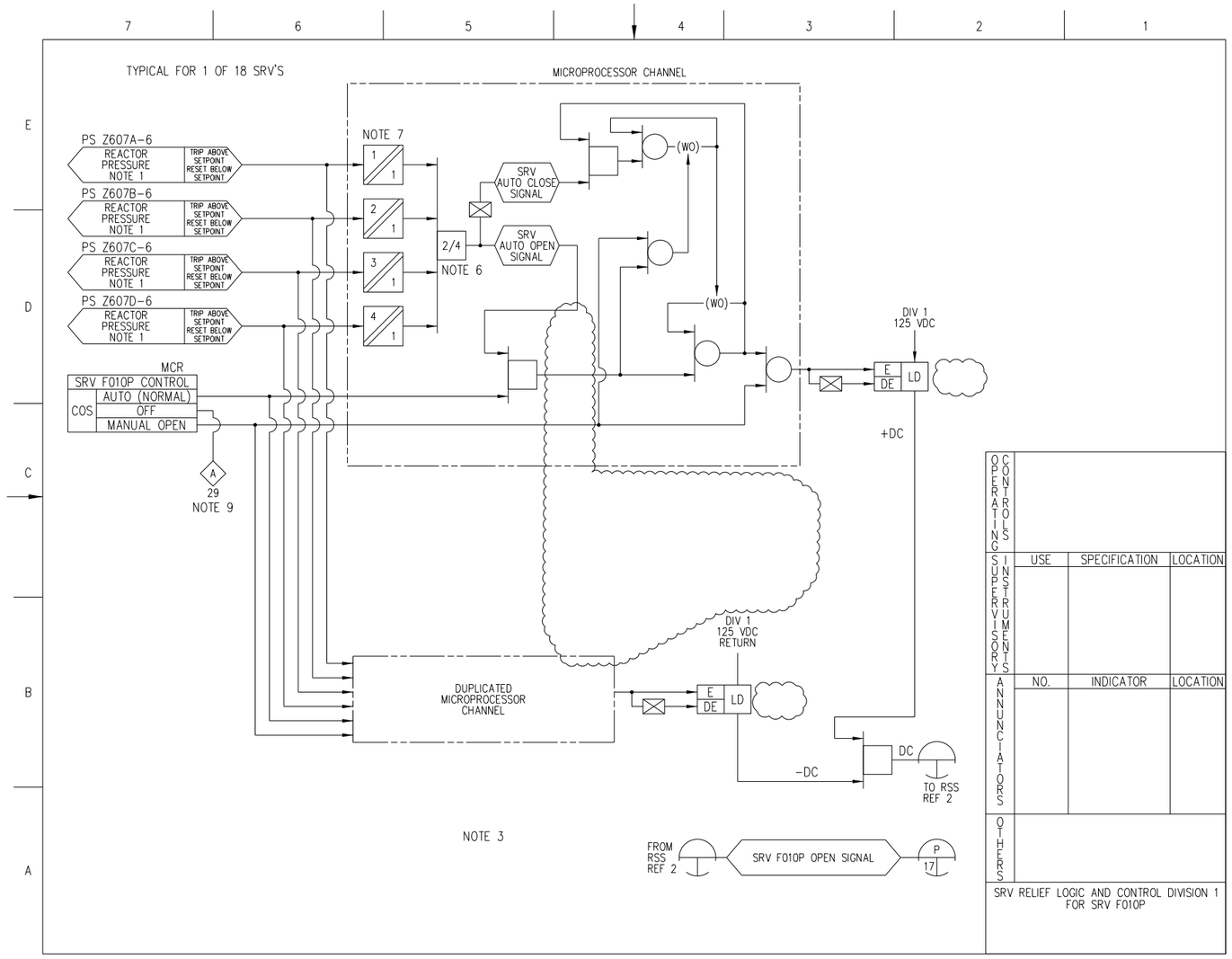

Figure 7.3-2 – Nuclear Boiler System IBD (Sheet 3 of 37)

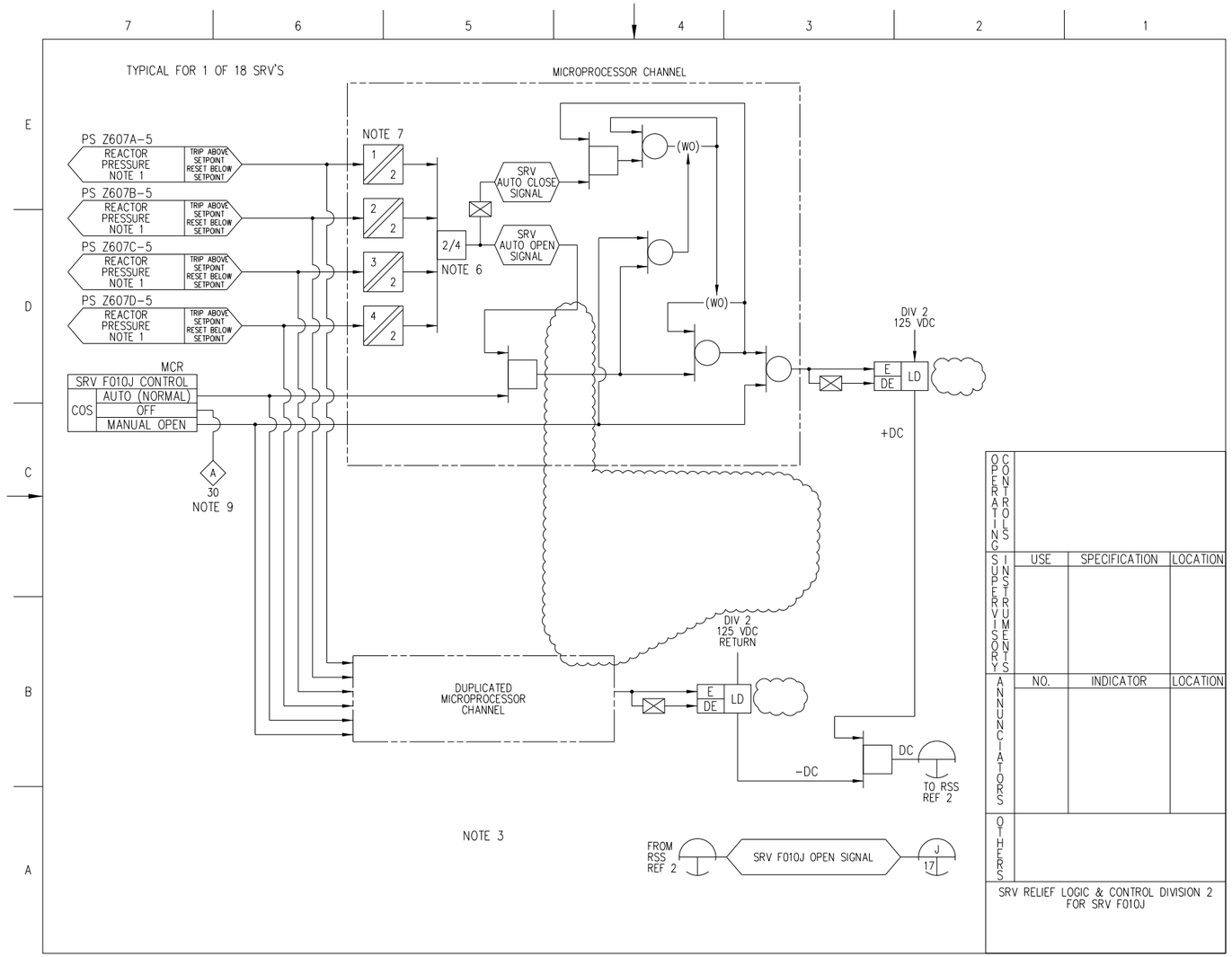

Figure 7.3-2 – Nuclear Boiler System IBD (Sheet 4 of 37)

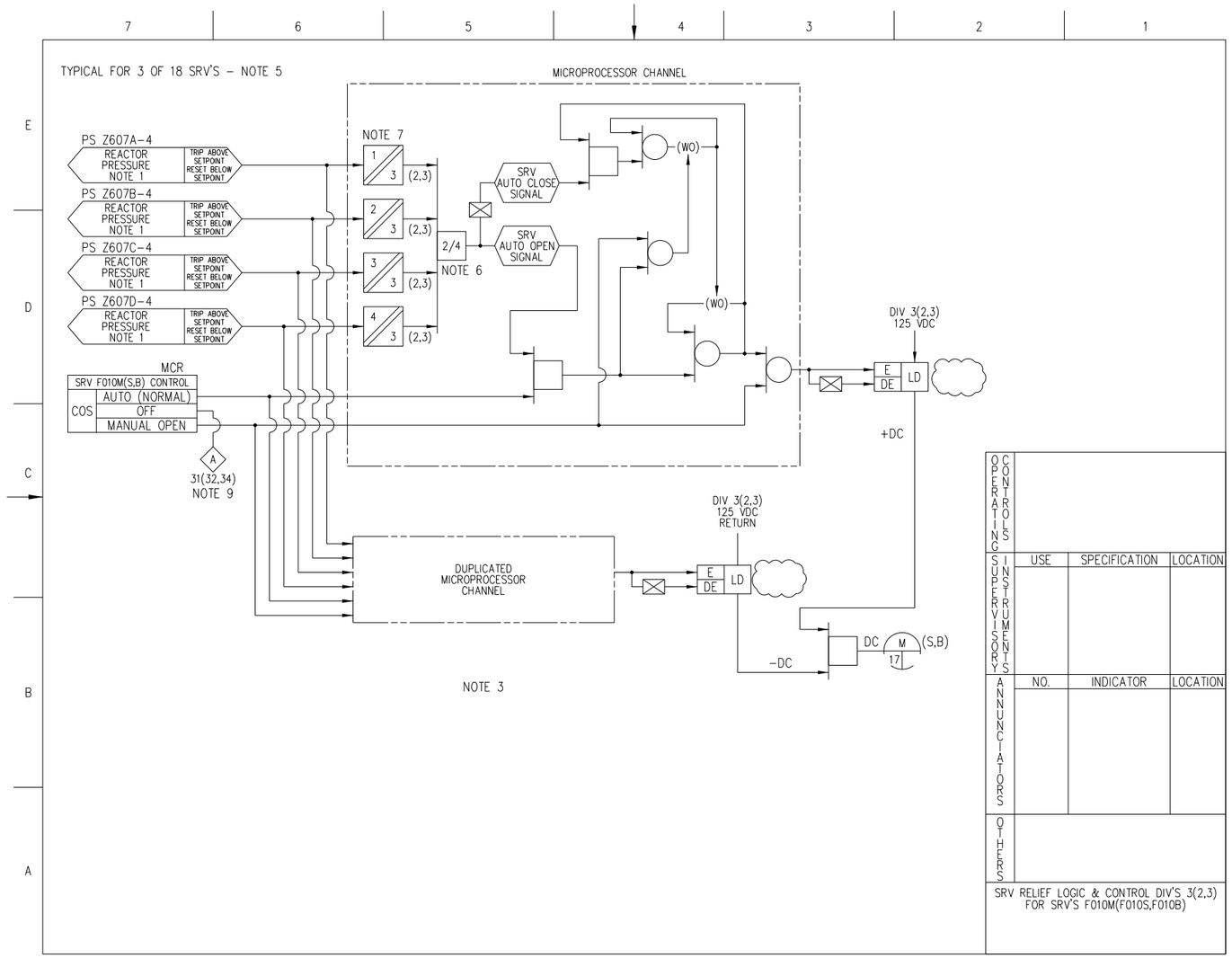

Figure 7.3-2 – Nuclear Boiler System IBD (Sheet 5 of 37)

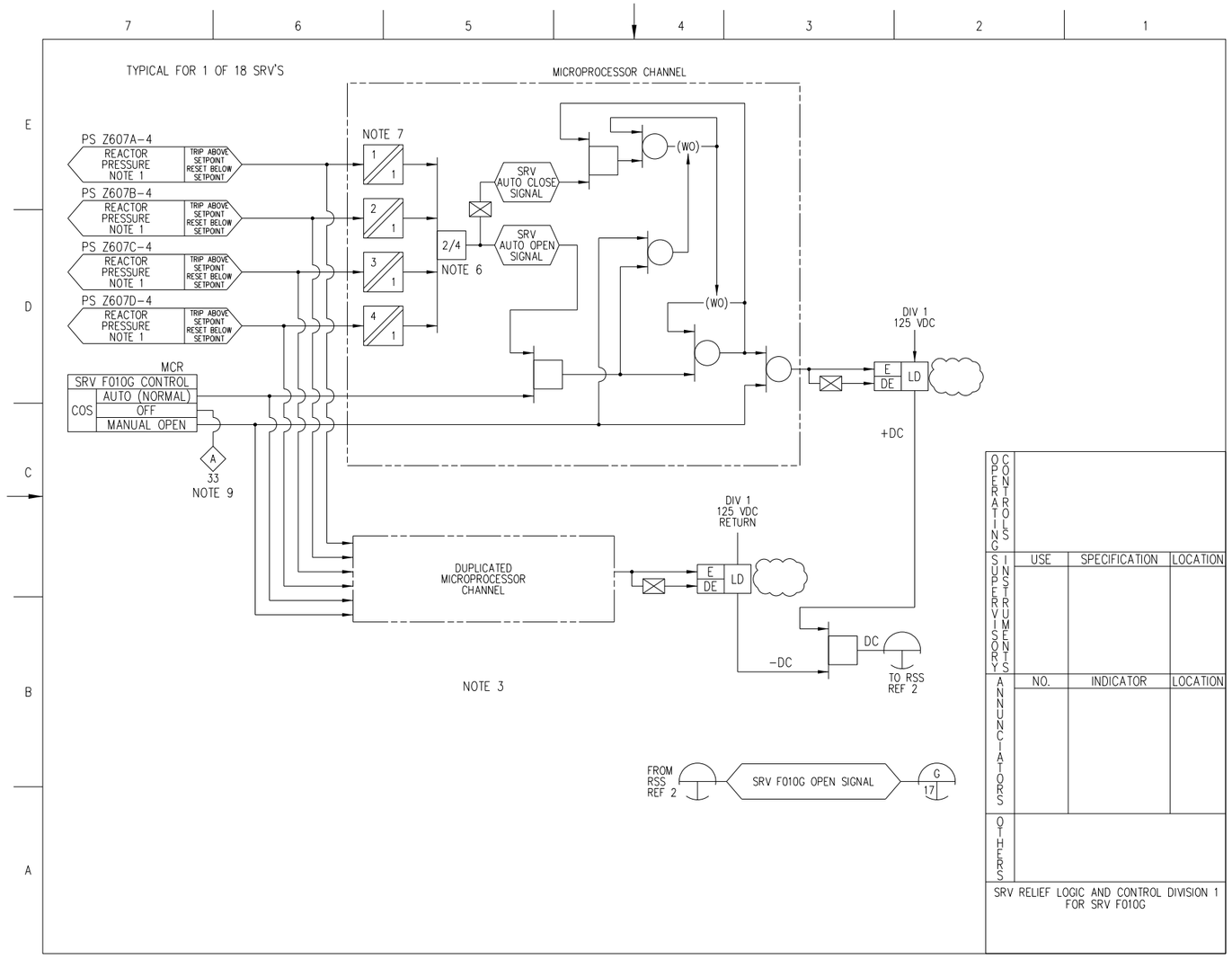

Figure 7.3-2 – Nuclear Boiler System IBD (Sheet 6 of 37)

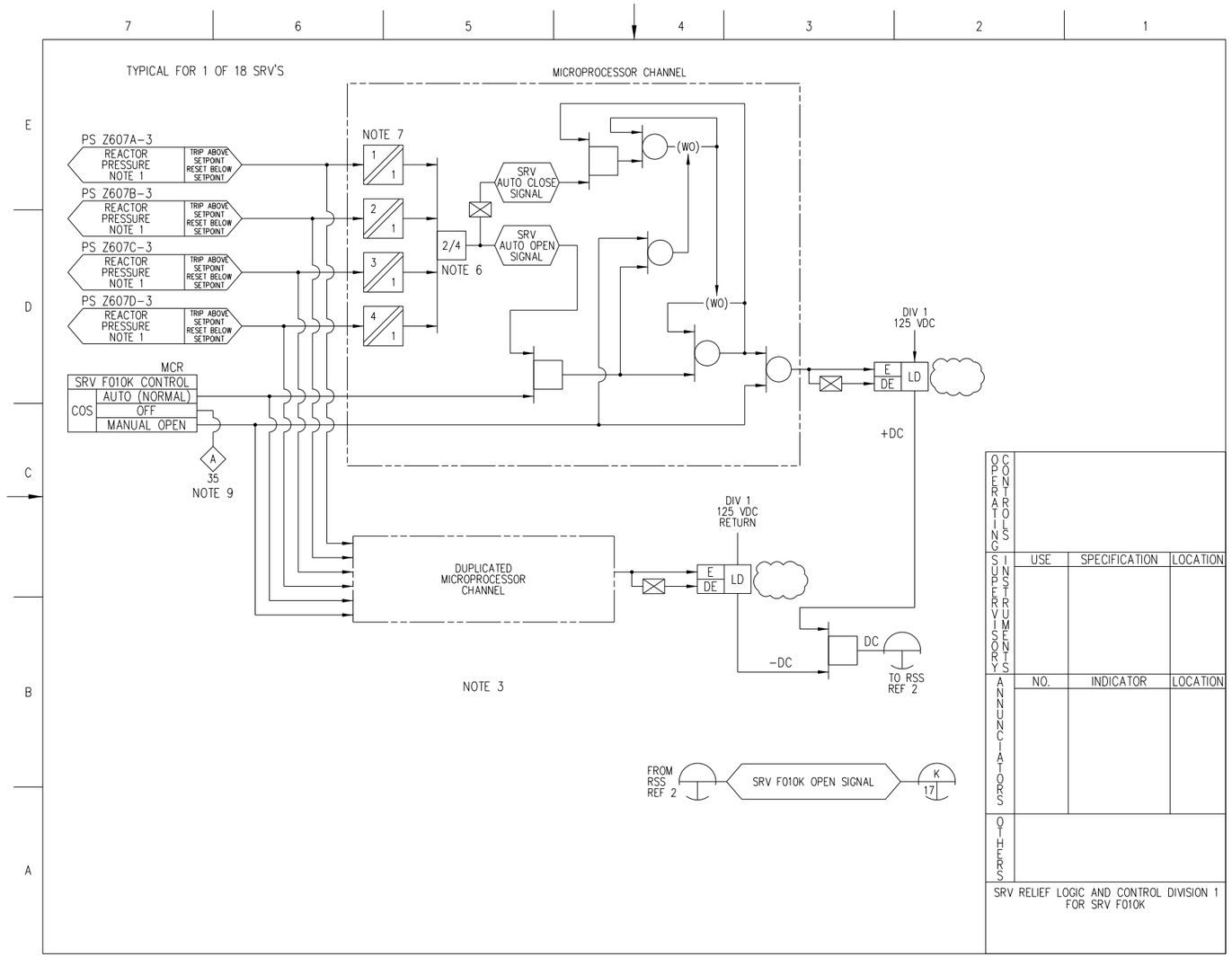

Figure 7.3-2 – Nuclear Boiler System IBD (Sheet 7 of 37)

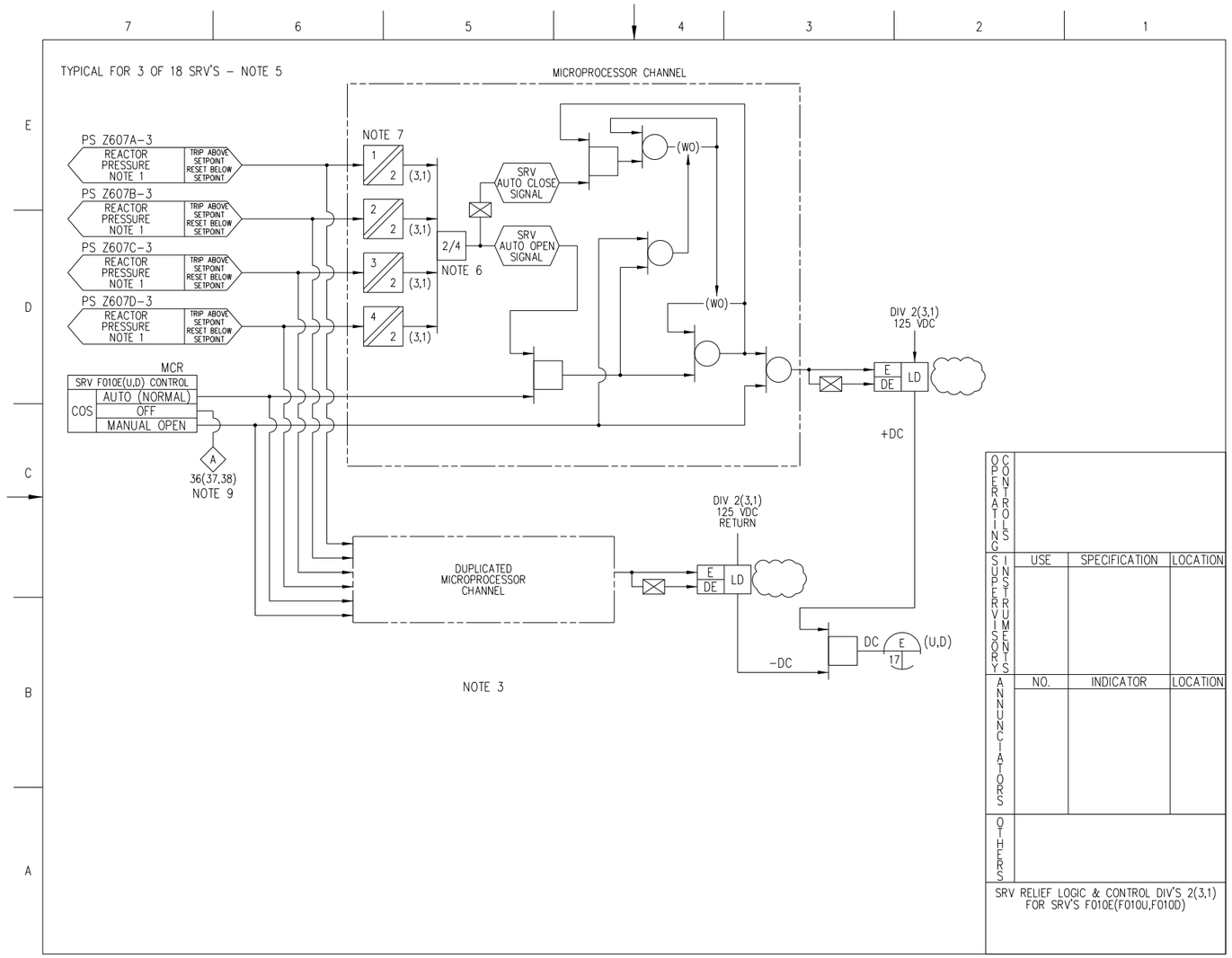

Figure 7.3-2 – Nuclear Boiler System IBD (Sheet 8 of 37)

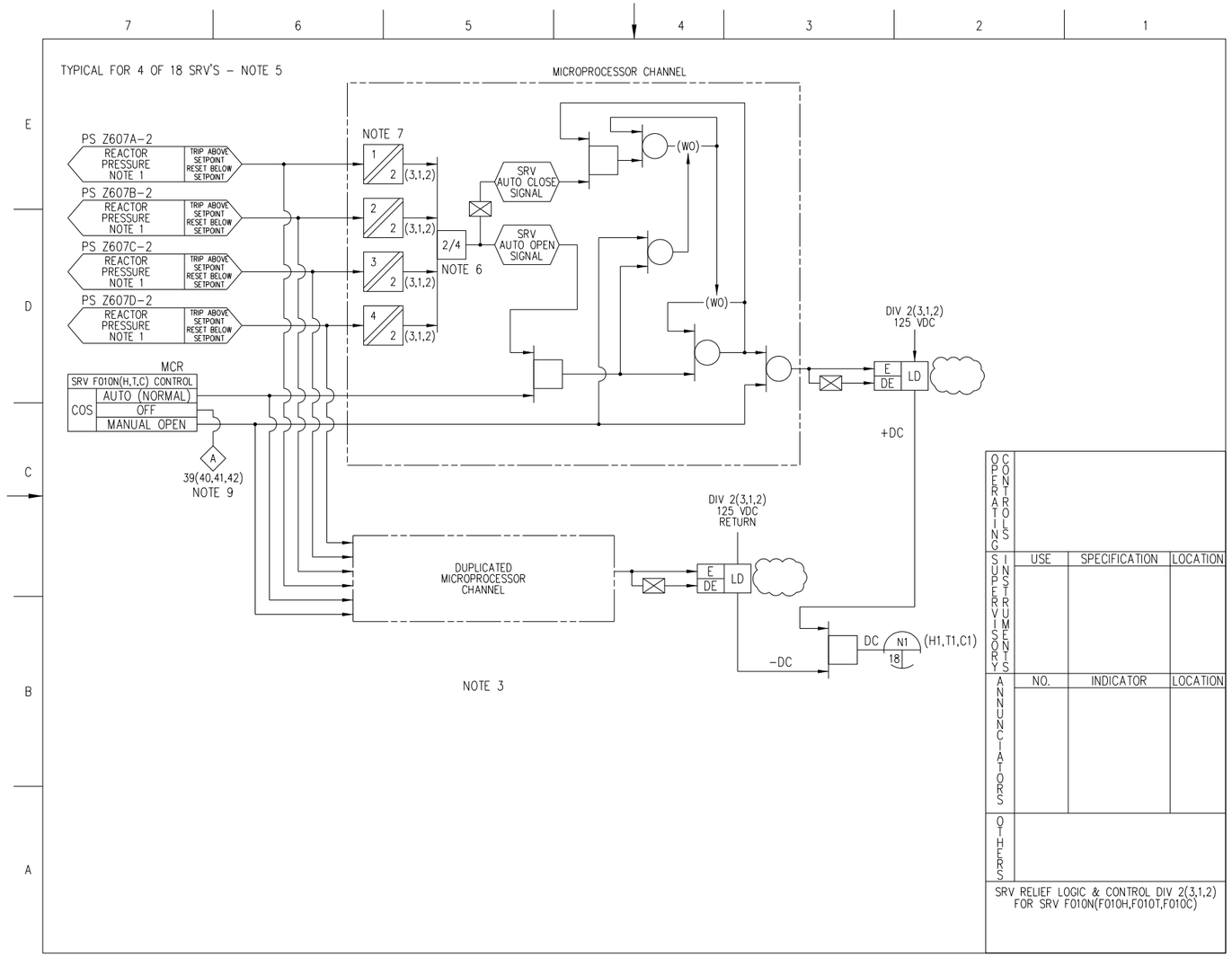

Figure 7.3-2 – Nuclear Boiler System IBD (Sheet 9 of 37)

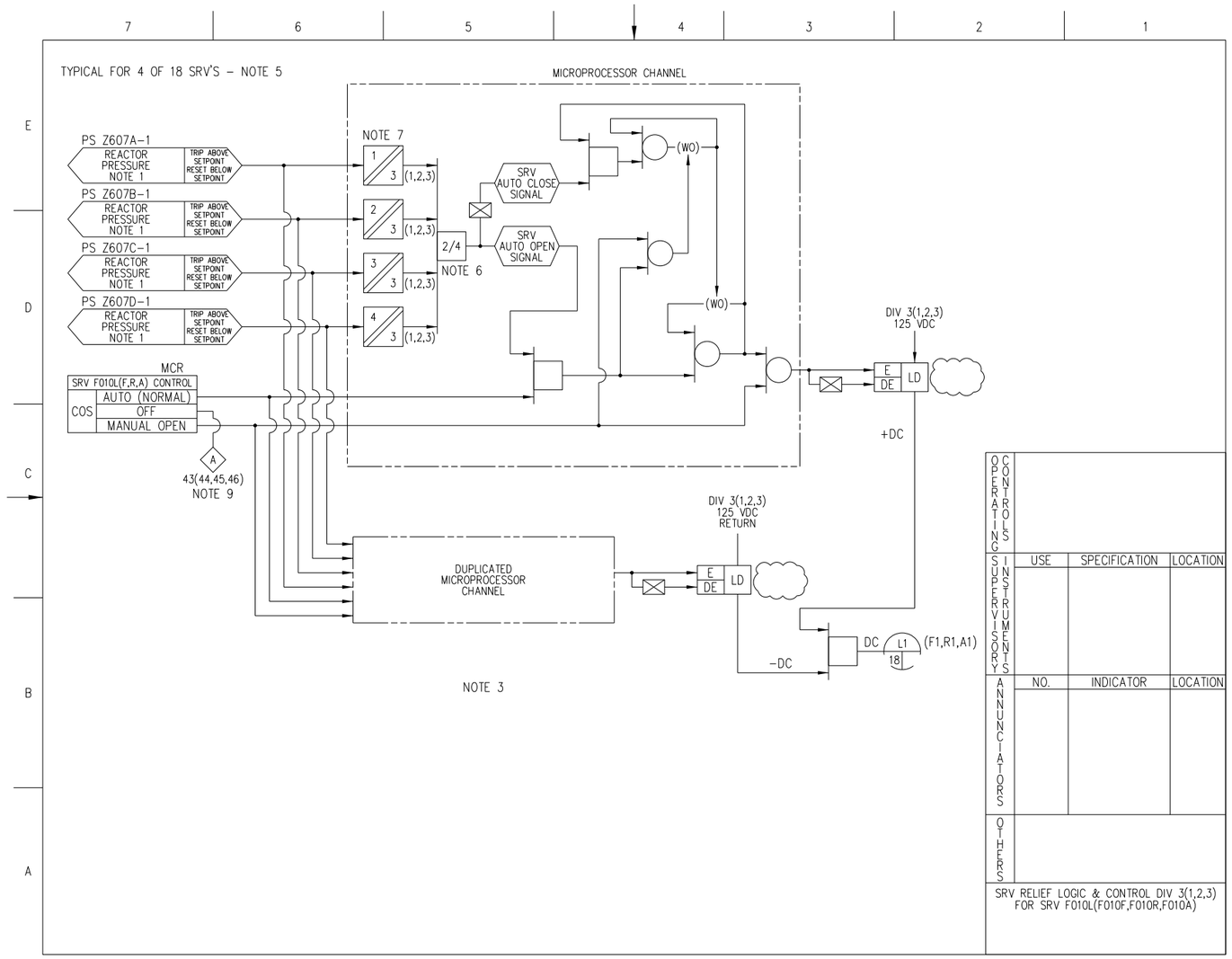

Figure 7.3-2 – Nuclear Boiler System IBD (Sheet 10 of 37)

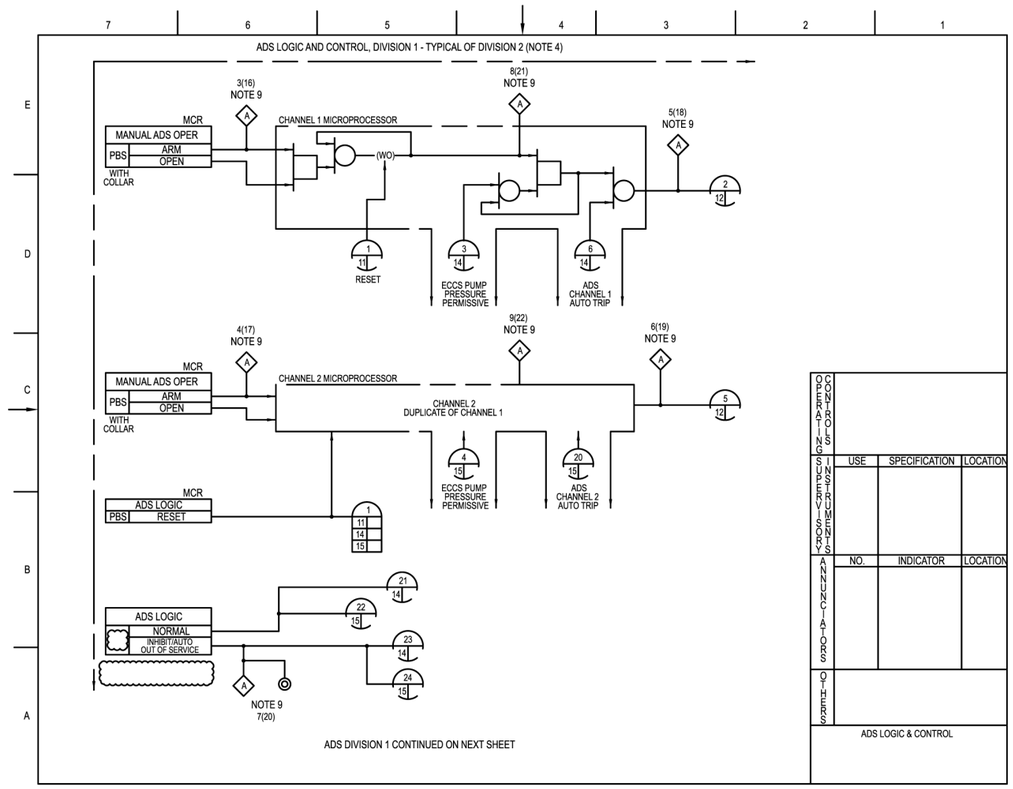

Figure 7.3-2 – Nuclear Boiler System IBD (Sheet 11 of 37)

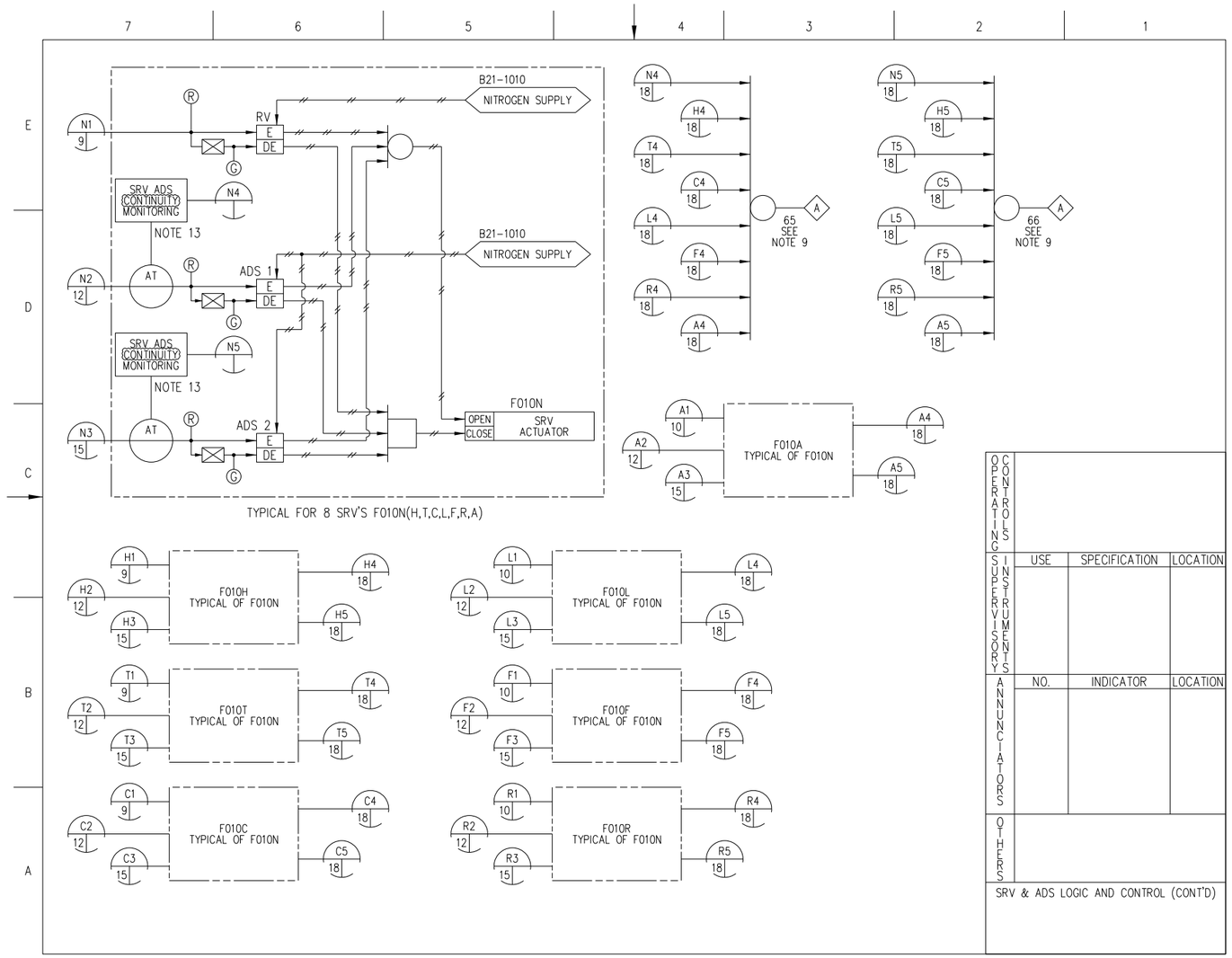

Figure 7.3-2 – Nuclear Boiler System IBD (Sheet 18 of 37)

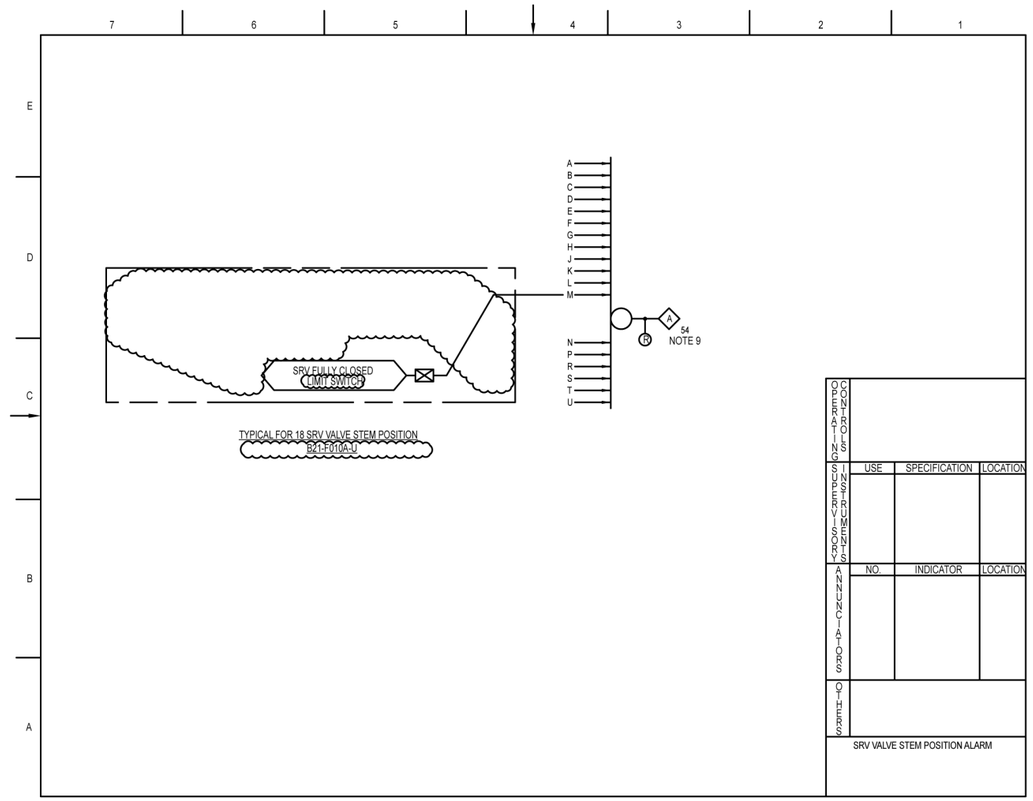

Figure 7.3-2 – Nuclear Boiler System IBD (Sheet 30 of 37)

TABLE 1: ANNUNCIATOR/ALARM LIGHTS - NOTE 10

ALARM NO.	INDICATION	FUNCTION	SOURCE OF SIGNAL
3	ALARM	ADS CHANNEL 1 ARMED DIVISION 1	LOGIC OUTPUT SHEET 11
4	ALARM	ADS CHANNEL 2 ARMED DIVISION 1	LOGIC OUTPUT SHEET 11
5	ALARM	ADS CHANNEL 1 TRIP DIVISION 1	LOGIC OUTPUT SHEET 11
6	ALARM	ADS CHANNEL 2 TRIP DIVISION 1	LOGIC OUTPUT SHEET 11
7	ALARM/ORANGE LIGHT	ADS INHIBIT SWITCH IN INHIBIT POSITION DIVISION 1	LOGIC OUTPUT SHEET 11
8	ALARM	ADS CHANNEL 1 MANUAL PERMISSIVE DIVISION 1	LOGIC OUTPUT SHEET 11
9	ALARM	ADS CHANNEL 2 MANUAL PERMISSIVE DIVISION 1	LOGIC OUTPUT SHEET 11
10	ALARM	ADS 29 SECOND TIMER RUNNING CHANNEL 1 DIVISION 1	LOGIC OUTPUT SHEET 14
11	ALARM	ADS 29 SECOND TIMER RUNNING CHANNEL 2 DIVISION 1	LOGIC OUTPUT SHEET 15
12	ALARM	ADS HIGH DRYWELL PRESSURE PERMISSIVE CHANNEL 1 DIV 1	LOGIC OUTPUT SHEET 14
13	ALARM	ADS HIGH DRYWELL PRESSURE PERMISSIVE CHANNEL 2 DIV 1	LOGIC OUTPUT SHEET 15
14	ALARM	ADS ECCS PUMP DISC PRESS PERMISSIVE CHANNEL 1 DIV 1	LOGIC OUTPUT SHEET 14
15	ALARM	ADS ECCS PUMP DISC PRESS PERMISSIVE CHANNEL 2 DIV 1	LOGIC OUTPUT SHEET 15
16	ALARM	ADS CHANNEL 1 ARMED DIVISION 2	LOGIC OUTPUT SHEET 11
17	ALARM	ADS CHANNEL 2 ARMED DIVISION 2	LOGIC OUTPUT SHEET 11
18	ALARM	ADS CHANNEL 1 TRIP DIVISION 2	LOGIC OUTPUT SHEET 11
19	ALARM	ADS CHANNEL 2 TRIP DIVISION 2	LOGIC OUTPUT SHEET 11
20	ALARM/ORANGE LIGHT	ADS INHIBIT SWITCH IN INHIBIT POSITION DIVISION 2	LOGIC OUTPUT SHEET 11
21	ALARM	ADS CHANNEL 1 MANUAL PERMISSIVE DIVISION 2	LOGIC OUTPUT SHEET 11
22	ALARM	ADS CHANNEL 2 MANUAL PERMISSIVE DIVISION 2	LOGIC OUTPUT SHEET 11
23	ALARM	ADS 29 SECOND TIMER RUNNING CHANNEL 1 DIVISION 2	LOGIC OUTPUT SHEET 14
24	ALARM	ADS 29 SECOND TIMER RUNNING CHANNEL 2 DIV 2	LOGIC OUTPUT SHEET 15
25	ALARM	ADS HIGH DRYWELL PRESS PERMISSIVE CHANNEL 1 DIV 2	LOGIC OUTPUT SHEET 14
26	ALARM	ADS HIGH DRYWELL PRESS PERMISSIVE CHANNEL 2 DIV 2	LOGIC OUTPUT SHEET 15
27	ALARM	ADS ECCS PUMP DISCH PRESS PERMISSIVE CHANNEL 1 DIV 2	LOGIC OUTPUT SHEET 14
28	ALARM	ADS ECCS PUMP DISCH PRESS PERMISSIVE CHANNEL 2 DIV 2	LOGIC OUTPUT SHEET 15
29	ALARM	SRV RELIEF "P" SWITCHED OFF	SWITCH OUTPUT SHEET 3

TABLE 1: (CONT)

ALARM NO.	INDICATION	FUNCTION	SOURCE OF SIGNAL
30	ALARM	SRV RELIEF "J" SWITCHED OFF	SWITCH OUTPUT SHEET 4
31	ALARM	SRV RELIEF "M" SWITCHED OFF	SWITCH OUTPUT SHEET 5
32	ALARM	SRV RELIEF "S" SWITCHED OFF	SWITCH OUTPUT SHEET 5
33	ALARM	SRV RELIEF "G" SWITCHED OFF	SWITCH OUTPUT SHEET 6
34	ALARM	SRV RELIEF "B" SWITCHED OFF	SWITCH OUTPUT SHEET 5
35	ALARM	SRV RELIEF "K" SWITCHED OFF	SWITCH OUTPUT SHEET 7
36	ALARM	SRV RELIEF "E" SWITCHED OFF	SWITCH OUTPUT SHEET 8
37	ALARM	SRV RELIEF "U" SWITCHED OFF	SWITCH OUTPUT SHEET 8
38	ALARM	SRV RELIEF "D" SWITCHED OFF	SWITCH OUTPUT SHEET 8
39	ALARM	SRV RELIEF "N" SWITCHED OFF	SWITCH OUTPUT SHEET 9
40	ALARM	SRV RELIEF "H" SWITCHED OFF	SWITCH OUTPUT SHEET 9
41	ALARM	SRV RELIEF "T" SWITCHED OFF	SWITCH OUTPUT SHEET 9
42	ALARM	SRV RELIEF "C" SWITCHED OFF	SWITCH OUTPUT SHEET 9
43	ALARM	SRV RELIEF "L" SWITCHED OFF	SWITCH OUTPUT SHEET 10
44	ALARM	SRV RELIEF "F" SWITCHED OFF	SWITCH OUTPUT SHEET 10
45	ALARM	SRV RELIEF "R" SWITCHED OFF	SWITCH OUTPUT SHEET 10
46	ALARM	SRV RELIEF "A" SWITCHED OFF	SWITCH OUTPUT SHEET 10
47	ALARM/RED LIGHT	ENHANCED RPV WATER LEVEL LOW DIV 1	LOGIC OUTPUT SHEET 27
48	ALARM/RED LIGHT	ENHANCED RPV WATER LEVEL LOW DIV 2	LOGIC OUTPUT SHEET 27
49	ALARM/ORANGE LIGHT	LOW RPV METAL OR BOTTOM DRAIN TEMP	LOGIC OUTPUT SHEET 28
50	ALARM/RED LIGHT	HIGH DRYWELL PRESSURE DIVISION 1	LOGIC OUTPUT SHEET 29

ANNUNCIATOR LIST

Figure 7.3-2 – Nuclear Boiler System IBD (Sheet 34 of 37)

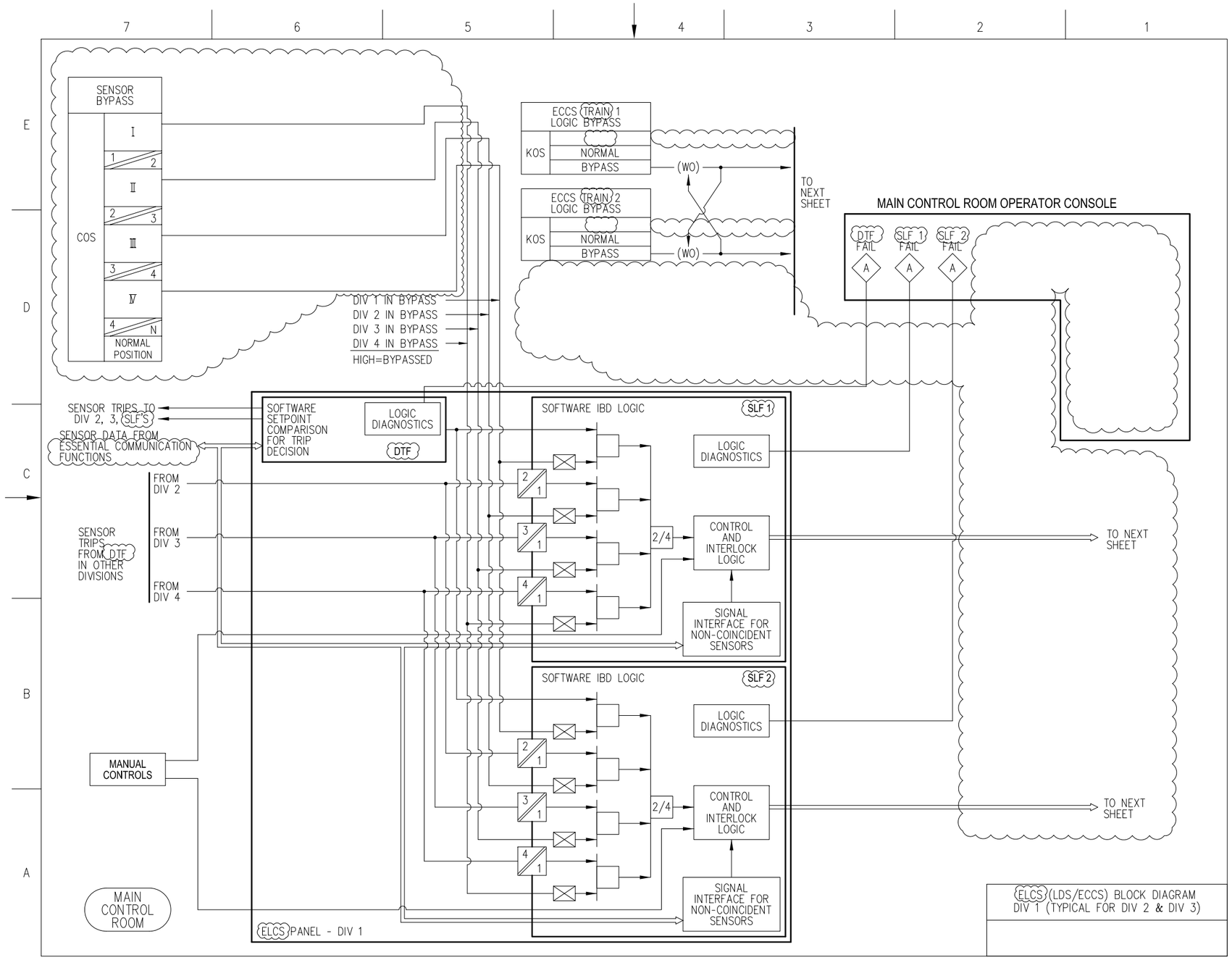

Figure 7.3-2 – Nuclear Boiler System IBD (Sheet 36 of 37)

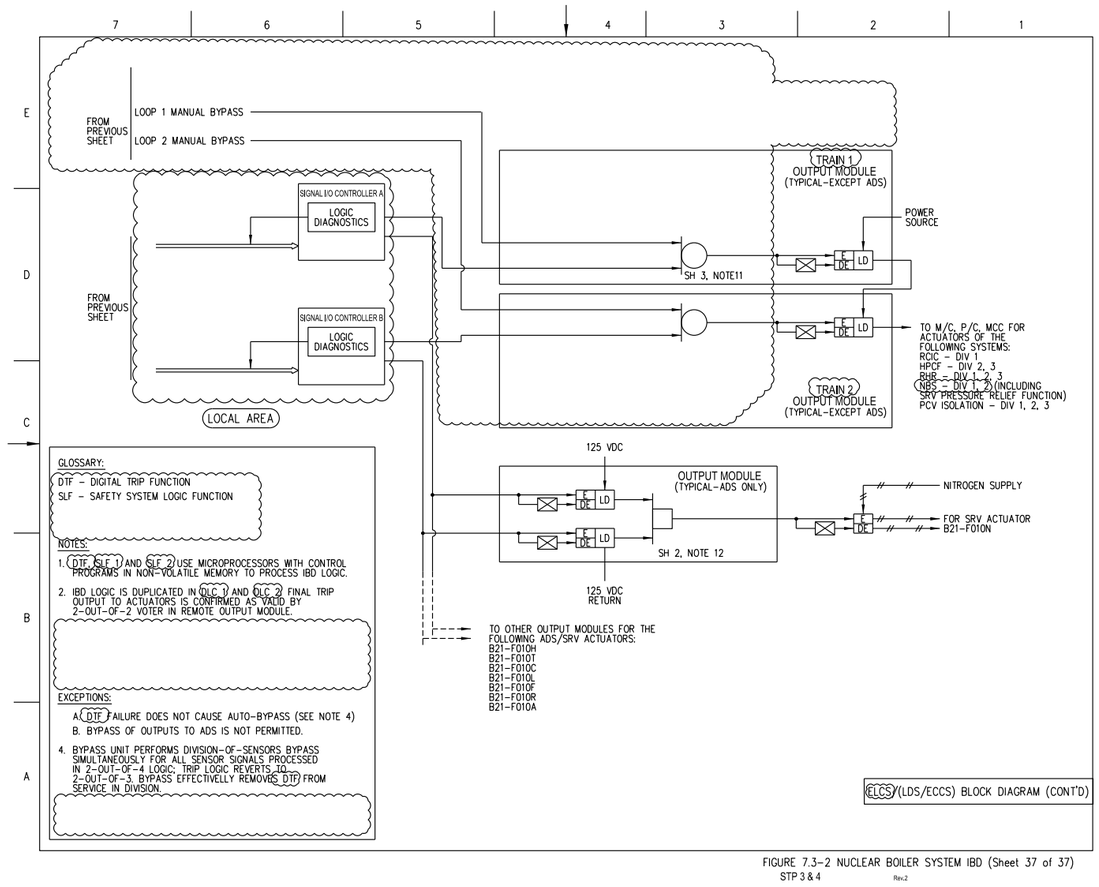

FIGURE 7.3-2 NUCLEAR BOILER SYSTEM IBD (Sheet 37 of 37)
STP 3 & 4 Rev.2

Figure 7.3-2 – Nuclear Boiler System IBD (Sheet 37 of 37)