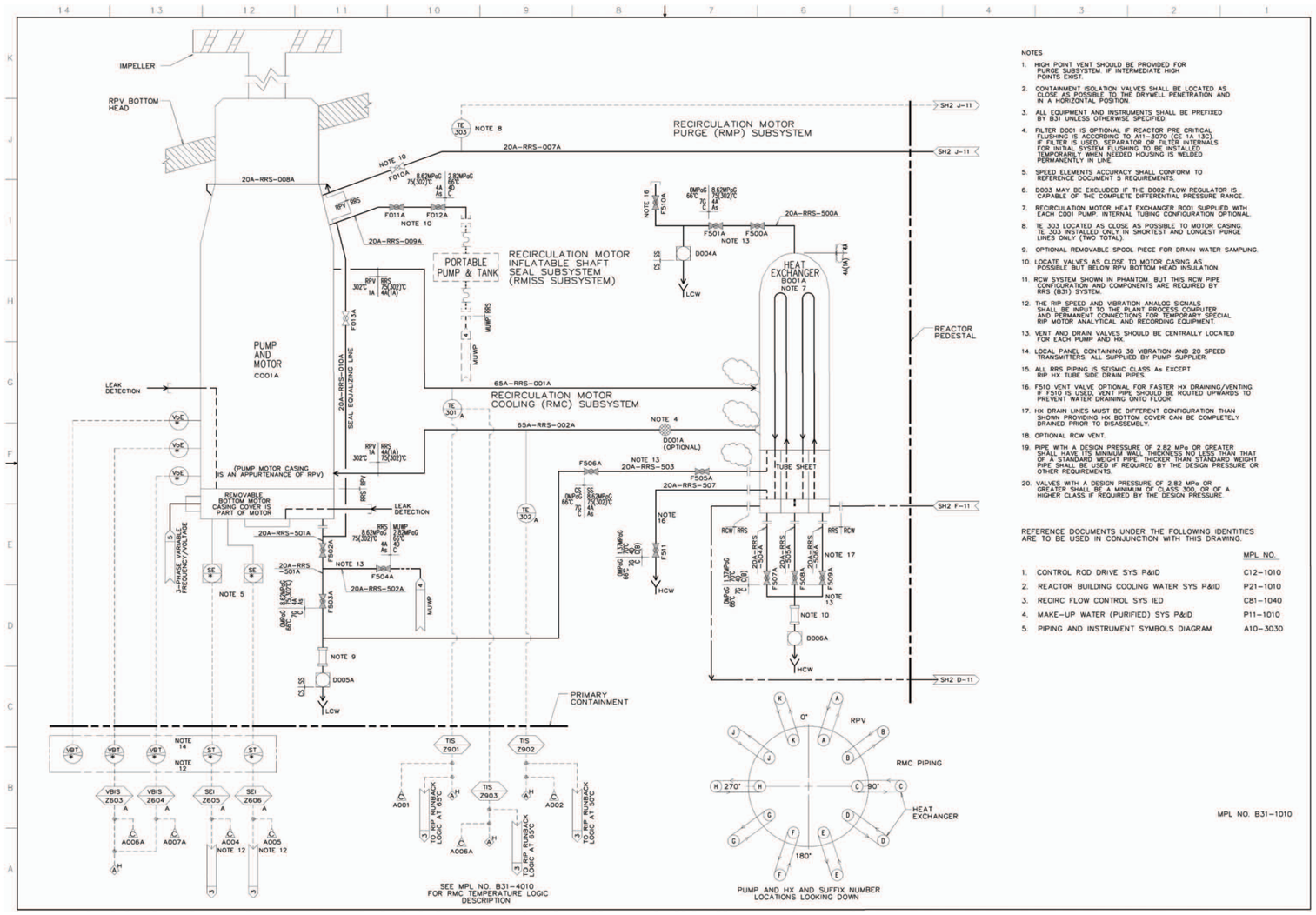

NOTES

1. HIGH POINT VENT SHOULD BE PROVIDED FOR PURGE SUBSYSTEM. IF INTERMEDIATE HIGH POINTS EXIST.
2. CONTAINMENT ISOLATION VALVES SHALL BE LOCATED AS CLOSE AS POSSIBLE TO THE DRYWELL PENETRATION AND IN A HORIZONTAL POSITION.
3. ALL EQUIPMENT AND INSTRUMENTS SHALL BE PREFIXED BY B31 UNLESS OTHERWISE SPECIFIED.
4. FILTER D001 IS OPTIONAL IF REACTOR PRE CRITICAL FLUSHING IS ACCORDING TO A11-3070 (CE 1A 13C). IF FILTER IS USED, SEPARATOR OR FILTER INTERNALS FOR INITIAL SYSTEM FLUSHING TO BE INSTALLED TEMPORARILY WHEN NEEDED HOUSING IS WELDED PERMANENTLY IN LINE.
5. SPEED ELEMENTS ACCURACY SHALL CONFORM TO REFERENCE DOCUMENT 5 REQUIREMENTS.
6. D003 MAY BE EXCLUDED IF THE D002 FLOW REGULATOR IS CAPABLE OF THE COMPLETE DIFFERENTIAL PRESSURE RANGE.
7. RECIRCULATION MOTOR HEAT EXCHANGER B001 SUPPLIED WITH EACH C001 PUMP. INTERNAL TUBING CONFIGURATION OPTIONAL.
8. TE 303 LOCATED AS CLOSE AS POSSIBLE TO MOTOR CASING. TE 303 INSTALLED ONLY IN SHORTEST AND LONGEST PURGE LINES ONLY (TWO TOTAL).
9. OPTIONAL REMOVABLE SPOOL PIECE FOR DRAIN WATER SAMPLING.
10. LOCATE VALVES AS CLOSE TO MOTOR CASING AS POSSIBLE BUT BELOW RPV BOTTOM HEAD INSULATION.
11. RCW SYSTEM SHOWN IN PHANTOM, BUT THIS RCW PIPE CONFIGURATION AND COMPONENTS ARE REQUIRED BY RRS (B31) SYSTEM.
12. THE RIP SPEED AND VIBRATION ANALOG SIGNALS SHALL BE INPUT TO THE PLANT PROCESS COMPUTER AND PERMANENT CONNECTIONS FOR TEMPORARY SPECIAL RIP MOTOR ANALYTICAL AND RECORDING EQUIPMENT.
13. VENT AND DRAIN VALVES SHOULD BE CENTRALLY LOCATED FOR EACH PUMP AND HX.
14. LOCAL PANEL CONTAINING 30 VIBRATION AND 20 SPEED TRANSMITTERS. ALL SUPPLIED BY PUMP SUPPLIER.
15. ALL RRS PIPING IS SEISMIC CLASS As EXCEPT RIP HX TUBE SIDE DRAIN PIPES.
16. F510 VENT VALVE OPTIONAL FOR FASTER HX DRAINING/VENTING. IF F510 IS USED, VENT PIPE SHOULD BE ROUTED UPWARDS TO PREVENT WATER DRAINING ONTO FLOOR.
17. HX DRAIN LINES MUST BE DIFFERENT CONFIGURATION THAN SHOWN PROVIDING HX BOTTOM COVER CAN BE COMPLETELY DRAINED PRIOR TO DISASSEMBLY.
18. OPTIONAL RCW VENT.
19. PIPE WITH A DESIGN PRESSURE OF 2.82 MPa OR GREATER SHALL HAVE ITS MINIMUM WALL THICKNESS NO LESS THAN THAT OF A STANDARD WEIGHT PIPE. THICKER THAN STANDARD WEIGHT PIPE SHALL BE USED IF REQUIRED BY THE DESIGN PRESSURE OR OTHER REQUIREMENTS.
20. VALVES WITH A DESIGN PRESSURE OF 2.82 MPa OR GREATER SHALL BE A MINIMUM OF CLASS 300, OR OF A HIGHER CLASS IF REQUIRED BY THE DESIGN PRESSURE.

REFERENCE DOCUMENTS UNDER THE FOLLOWING IDENTITIES ARE TO BE USED IN CONJUNCTION WITH THIS DRAWING.

		MPL NO.
1.	CONTROL ROD DRIVE SYS P&ID	C12-1010
2.	REACTOR BUILDING COOLING WATER SYS P&ID	P21-1010
3.	RECIRC FLOW CONTROL SYS IED	C81-1040
4.	MAKE-UP WATER (PURIFIED) SYS P&ID	P11-1010
5.	PIPING AND INSTRUMENT SYMBOLS DIAGRAM	A10-3030

Figure 5.4-4 – Reactor Recirculation System P&ID (Sheet 1 of 2)

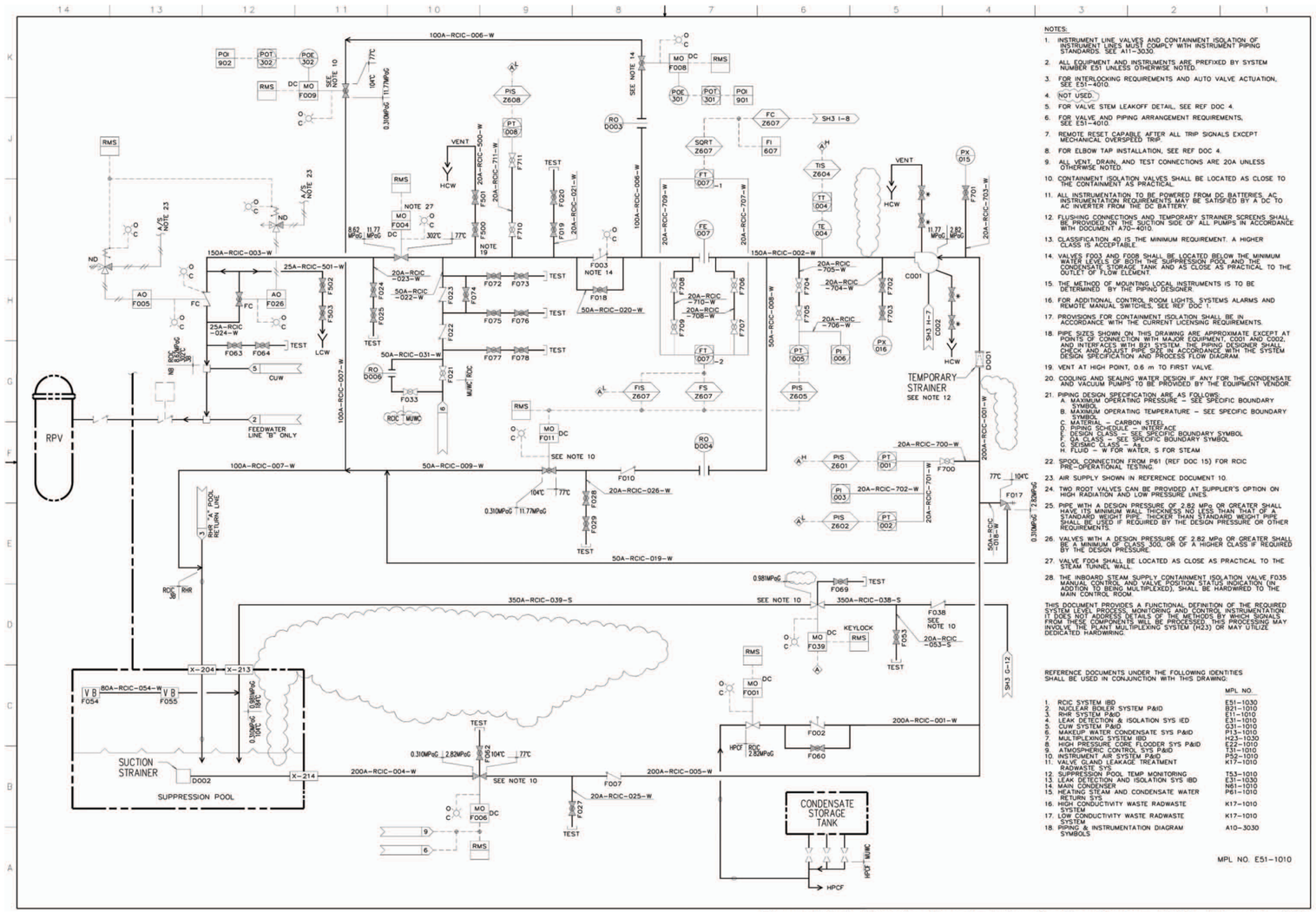

Figure 5.4-8 – Reactor Core Isolation Cooling System P&ID (Sheet 1 of 3)

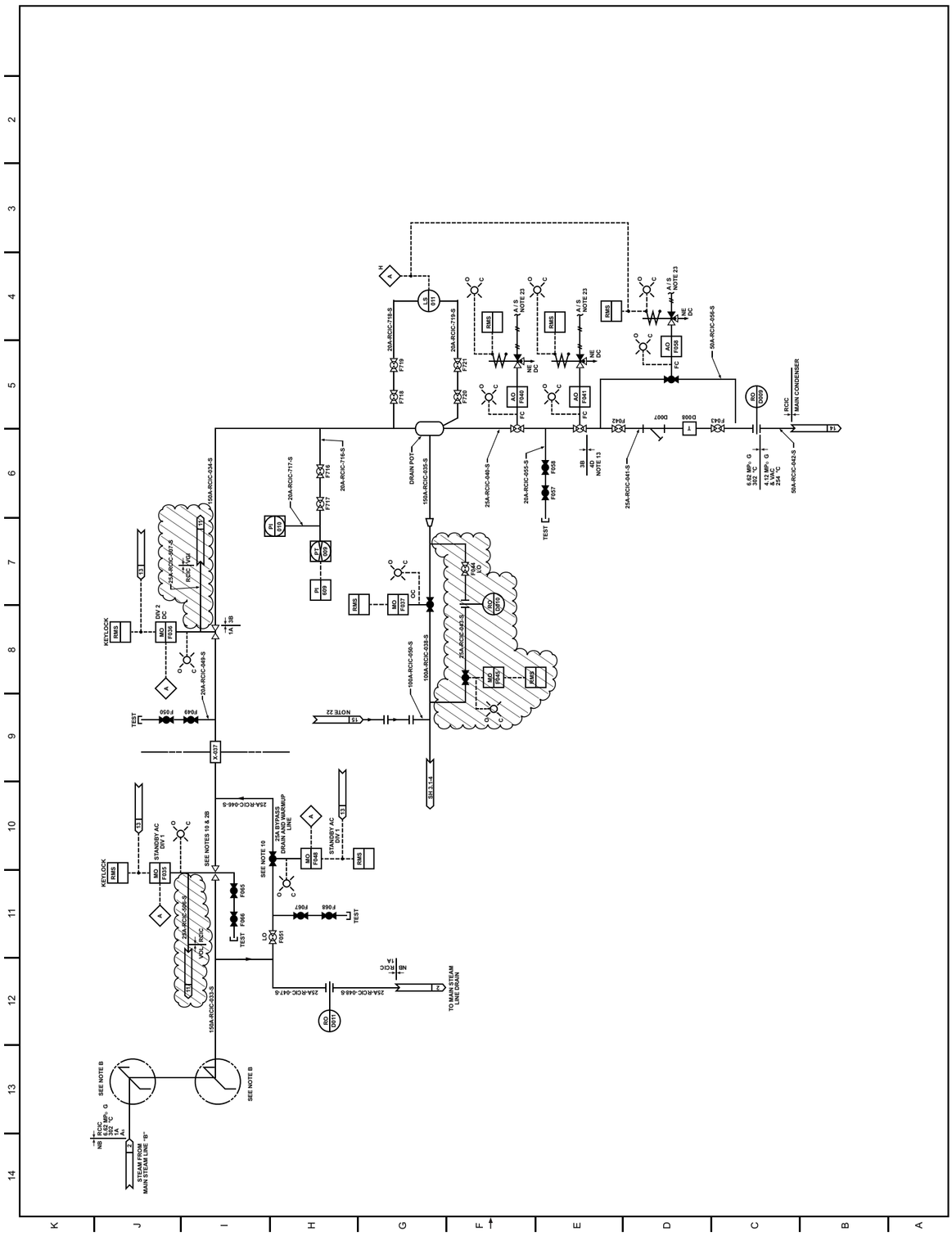

Figure 5.4-8 – Reactor Core Isolation Cooling System P&ID (Sheet 2 of 3)

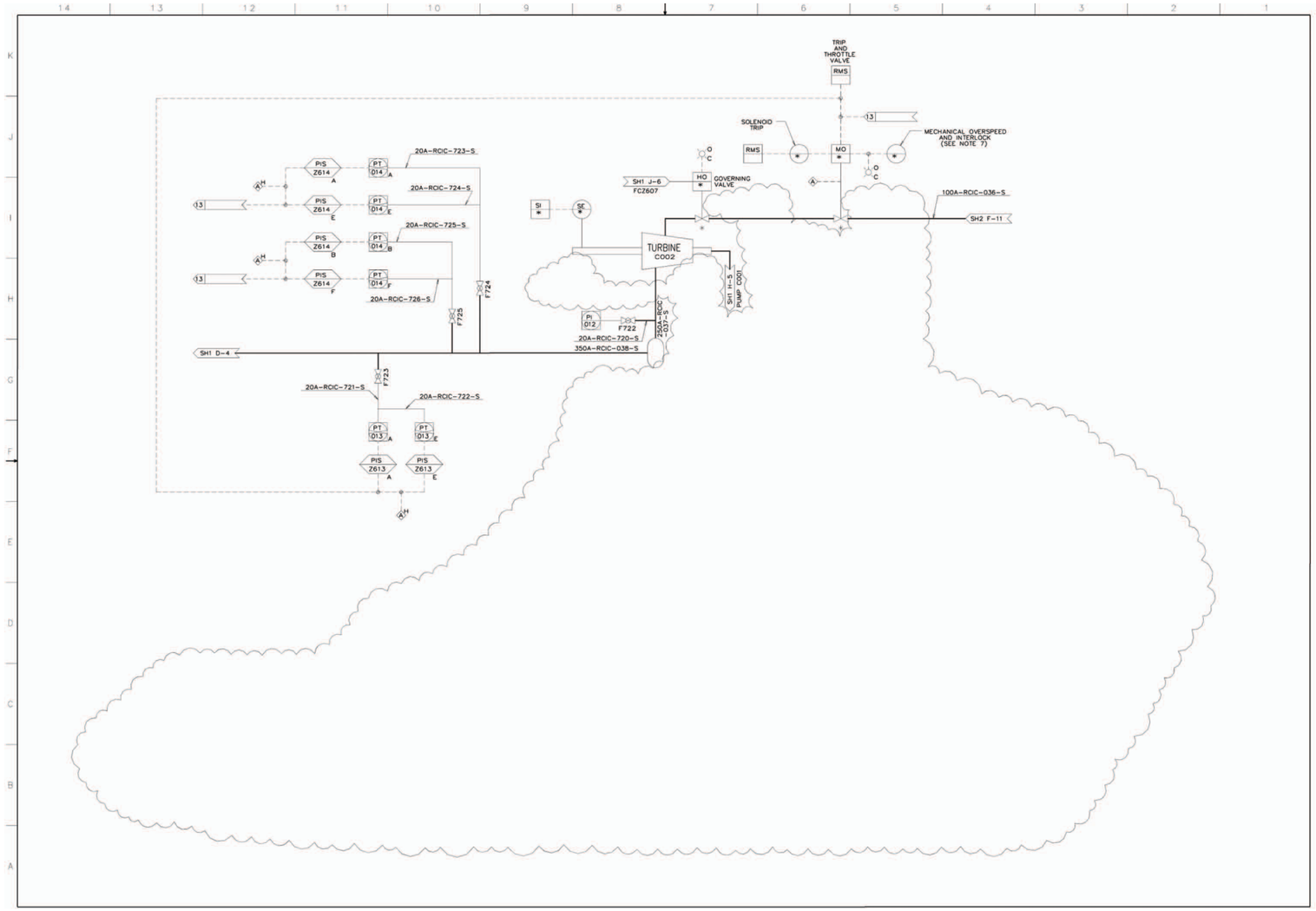

Figure 5.4-8 – Reactor Core Isolation Cooling System P&ID (Sheet 3 of 3)

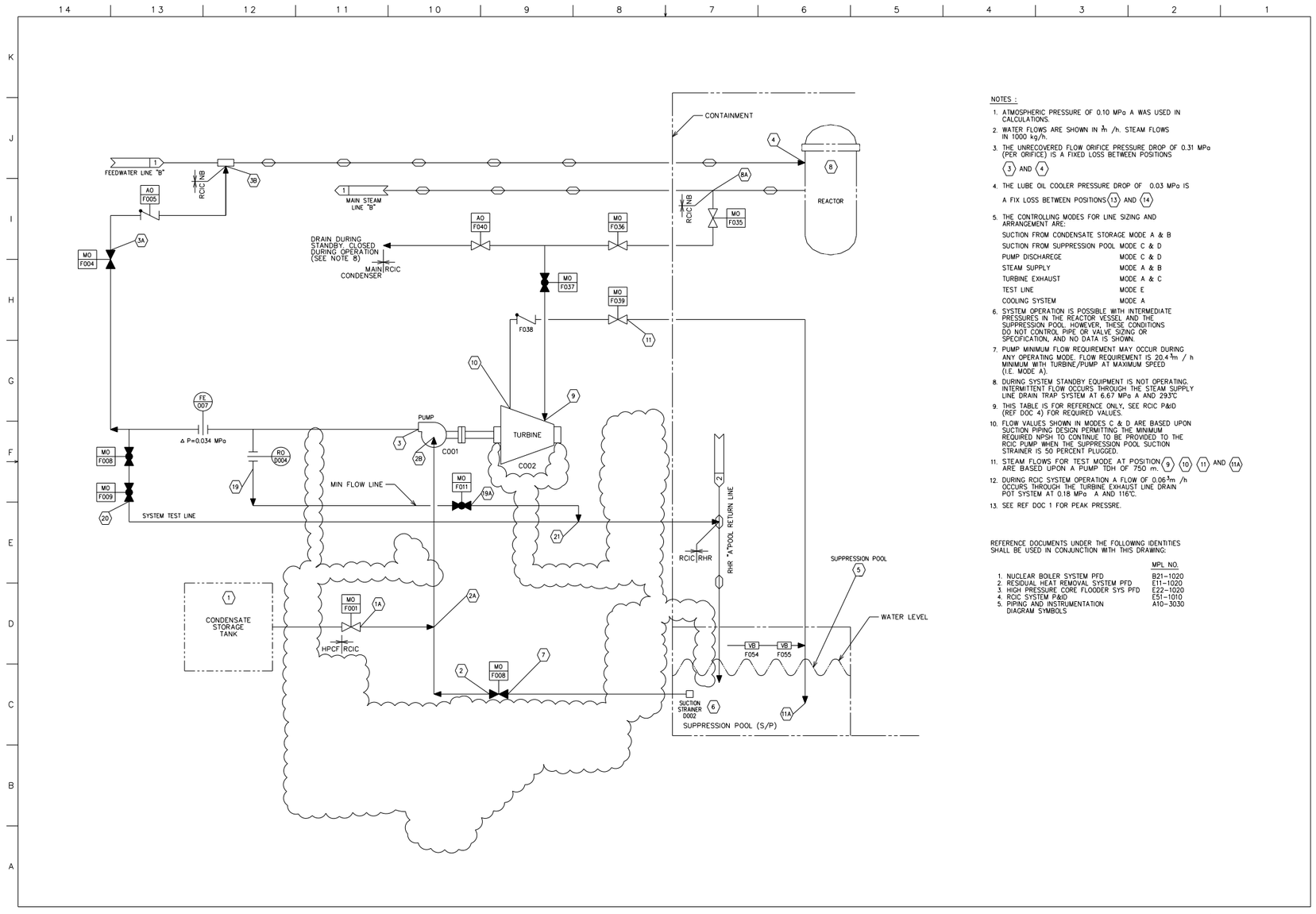

NOTES :

1. ATMOSPHERIC PRESSURE OF 0.10 MPa A WAS USED IN CALCULATIONS.
2. WATER FLOWS ARE SHOWN IN ^{3}m /h. STEAM FLOWS IN 1000 kg/h.
3. THE UNRECOVERED FLOW ORIFICE PRESSURE DROP OF 0.31 MPa (PER ORIFICE) IS A FIXED LOSS BETWEEN POSITIONS (3) AND (4)
4. THE LUBE OIL COOLER PRESSURE DROP OF 0.03 MPa IS A FIX LOSS BETWEEN POSITIONS (13) AND (14)
5. THE CONTROLLING MODES FOR LINE SIZING AND ARRANGEMENT ARE:

SUCTION FROM CONDENSATE STORAGE	MODE A & B
SUCTION FROM SUPPRESSION POOL	MODE C & D
PUMP DISCHAREGE	MODE C & D
STEAM SUPPLY	MODE A & B
TURBINE EXHAUST	MODE A & C
TEST LINE	MODE E
COOLING SYSTEM	MODE A

6. SYSTEM OPERATION IS POSSIBLE WITH INTERMEDIATE PRESSURES IN THE REACTOR VESSEL AND THE SUPPRESSION POOL, HOWEVER, THESE CONDITIONS DO NOT CONTROL PIPE OR VALVE SIZING OR SPECIFICATION, AND NO DATA IS SHOWN.
7. PUMP MINIMUM FLOW REQUIREMENT MAY OCCUR DURING ANY OPERATING MODE. FLOW REQUIREMENT IS 20.4 ^{3}m / h MINIMUM WITH TURBINE/PUMP AT MAXIMUM SPEED (I.E. MODE A).
8. DURING SYSTEM STANDBY EQUIPMENT IS NOT OPERATING. INTERMITTENT FLOW OCCURS THROUGH THE STEAM SUPPLY LINE DRAIN TRAP SYSTEM AT 6.67 MPa A AND 293°C
9. THIS TABLE IS FOR REFERENCE ONLY. SEE RCIC P&ID (REF DOC 4) FOR REQUIRED VALUES.
10. FLOW VALUES SHOWN IN MODES C & D ARE BASED UPON SUCTION PIPING DESIGN PERMITTING THE MINIMUM REQUIRED NPSH TO CONTINUE TO BE PROVIDED TO THE RCIC PUMP WHEN THE SUPPRESSION POOL SUCTION STRAINER IS 50 PERCENT PLUGGED.
11. STEAM FLOWS FOR TEST MODE AT POSITION (9) (10) (11) AND (11A) ARE BASED UPON A PUMP TDH OF 750 m.
12. DURING RCIC SYSTEM OPERATION A FLOW OF 0.06 ^{3}m /h OCCURS THROUGH THE TURBINE EXHAUST LINE DRAIN POT SYSTEM AT 0.18 MPa A AND 116°C.
13. SEE REF DOC 1 FOR PEAK PRESSRE.

REFERENCE DOCUMENTS UNDER THE FOLLOWING IDENTITIES SHALL BE USED IN CONJUNCTION WITH THIS DRAWING:

	MPL NO.
1. NUCLEAR BOILER SYSTEM PFD	B21-1020
2. RESIDUAL HEAT REMOVAL SYSTEM PFD	E11-1020
3. HIGH PRESSURE CORE FLOODER SYS PFD	E22-1020
4. RCIC SYSTEM P&ID	E51-1010
5. PIPING AND INSTRUMENTATION DIAGRAM SYMBOLS	A10-3030

Figure 5.4-9 – Reactor Core Isolation Cooling System PFD (Sheet 1 of 2)

MODE A — SUCTION FROM CONDENSATE STORAGE, REACTOR AT HIGH PRESSURE, SUPPRESSION POOL AT ELEVATED PRESSURE

POSITION	1	2A	3	4	5	6	7	8	9	10	11	N/A	N/A	N/A	N/A	N/A	N/A	N/A	19	20	21
FLOW	–	182	188	182	–	–	0	–	16.4	16.4	16.4	N/A	N/A	N/A	N/A	N/A	N/A	N/A	–	0	0
PRESS MPa A	0.10	*	*	8.24	0.13	–	–	8.24	*	*	0.14	N/A	N/A	N/A	N/A	N/A	N/A	N/A	*	–	–
TEMP °C	40	40	40	40	60	–	–	296	SAT	SAT	109	N/A	N/A	N/A	N/A	N/A	N/A	N/A	40	–	–
Max /Min TEMP °C	40/10	40/10	40/10	40/10	77/10	–	–	296/16	296/16	121/16	121/10	N/A	N/A	N/A	N/A	N/A	N/A	N/A	40/10	–	–

MODE B — SUCTION FROM CONDENSATE STORAGE, REACTOR AT LOW PRESSURE, SUPPRESSION POOL AT ELEVATED PRESSURE

POSITION	1	2A	3	4	5	6	7	8	9	10	11	N/A	N/A	N/A	N/A	N/A	N/A	N/A	19	20	21
FLOW	–	182	188	182	–	–	0	–	5.4	5.3	5.3	N/A	N/A	N/A	N/A	N/A	N/A	N/A	–	0	0
PRESS MPa A	0.10	*	*	1.18	0.13	–	–	1.18	*	*	0.14	N/A	N/A	N/A	N/A	N/A	N/A	N/A	*	–	–
TEMP °C	40	40	40	40	60	–	–	185	SAT	SAT	109	N/A	N/A	N/A	N/A	N/A	N/A	N/A	40	–	–
Max /Min TEMP °C	40/10	40/10	40/10	40/10	77/10	–	–	186/16	186/16	121/16	121/16	N/A	N/A	N/A	N/A	N/A	N/A	N/A	40/10	–	–

MODE C — SUCTION FROM SUPPRESSION POOL, REACTOR AT HIGH PRESSURE, SUPPRESSION POOL AT LOW PRESSURE

POSITION	1	2	3	4	5	6	7	8	9	10	11	N/A	N/A	N/A	N/A	N/A	N/A	N/A	19	20	21
FLOW SEE NOTE 2	–	182	188	182	–	–	182	–	16.4	16.4	16.4	N/A	N/A	N/A	N/A	N/A	N/A	N/A	–	0	0
PRESS MPa A	–	*	*	8.24	0.10	0.14	0.14	8.24	*	*	0.12	N/A	N/A	N/A	N/A	N/A	N/A	N/A	*	–	–
TEMP °C	–	60	60	60	60	60	60	296	SAT	SAT	103	N/A	N/A	N/A	N/A	N/A	N/A	N/A	60	–	–
Max /Min TEMP °C	–	77/10	77/10	77/10	77/10	77/10	77/10	296/16	296/16	121/16	121/10	N/A	N/A	N/A	N/A	N/A	N/A	N/A	77/10	–	–

MODE D — SUCTION FROM SUPPRESSION POOL, REACTOR AT LOW PRESSURE, SUPPRESSION POOL AT LOW PRESSURE

POSITION	1	2	3	4	5	6	7	8	9	10	11	N/A	N/A	N/A	N/A	N/A	N/A	N/A	19	20	21
FLOW SEE NOTE 2	–	182	188	182	–	–	182	–	5.4	5.3	5.3	N/A	N/A	N/A	N/A	N/A	N/A	N/A	–	0	0
PRESS MPa A	–	*	*	1.18	0.10	0.14	0.13	1.18	*	*	0.12	N/A	N/A	N/A	N/A	N/A	N/A	N/A	*	–	–
TEMP °C	–	60	60	60	60	60	60	185	SAT	SAT	103	N/A	N/A	N/A	N/A	N/A	N/A	N/A	60	–	–
Max /Min TEMP °C	–	77/10	77/10	77/10	77/10	77/10	77/10	186/16	186/16	121/16	121/16	N/A	N/A	N/A	N/A	N/A	N/A	N/A	77/10	–	–

MODE E — TEST MODE: SUCTION FROM SUPPRESSION POOL, REACTOR AT HIGH PRESSURE, SUPPRESSION POOL AT LOW PRESSURE

POSITION	1	2	3	4	5	6	7	8	9	10	11	N/A	N/A	N/A	N/A	N/A	N/A	N/A	19	20	21
FLOW SEE NOTE 2	–	182	188	–	–	–	182	–	14.15	14.1	14.1	N/A	N/A	N/A	N/A	N/A	N/A	N/A	–	182	182
PRESS MPa A	–	*	*	–	0.10	0.14	0.14	7.17	*	*	0.12	N/A	N/A	N/A	N/A	N/A	N/A	N/A	*	*	*
TEMP °C	–	35	35	–	35	35	35	285	SAT	SAT	103	N/A	N/A	N/A	N/A	N/A	N/A	N/A	35	35	35
Max /Min TEMP °C	–	77/10	77/10	–	77/10	77/10	77/10	285/16	285/16	121/16	121/16	N/A	N/A	N/A	N/A	N/A	N/A	N/A	77/10	77/10	77/10

(SEE NOTE 9)

POSITION	1A–2A	2–2B	3–3A	3A–3B	6–7	8A–9	10–11	11–11A	N/A	N/A	N/A	N/A	N/A	N/A	3–19	19–19A	19A–21	3–20	20–21
PEAK PRESS MPa G	N/A	N/A	12.65	NOTE 13	N/A	10.35	N/A	N/A	N/A	N/A	N/A	N/A	N/A	N/A	12.65	12.65	N/A	12.65	N/A
DESIGN MPa G	2.82	2.82	11.77	8.62	0.31	8.62	8.62	0.98	N/A	N/A	N/A	N/A	N/A	N/A	11.77	11.77	0.31	11.77	0.31
DESIGN TEMP °C	77	77	77	302	77	302	302	104	N/A	N/A	N/A	N/A	N/A	N/A	77	77	104	77	104
ESTIMATED LINE SIZE mmA	200	200	150	150	200	200	350	350	N/A	N/A	N/A	N/A	N/A	N/A	50	50	50	100	100

PEAK PRESSURE– IS THE MAXIMUM PRESSURE ANTICIPATED DURING A TRANSIENT PERIOD WITH ALL OF THE CONTRIBUTING ELEMENTS AT A MAXIMUM. IT WOULD BE EXPECTED TO OCCUR LESS THAN 1% OF SYSTEM OPERATING TIME.

* THE PRESSURE AT THIS POSITION DEPENDS ON PIPING ARRANGEMENT AND MAY BE VARIED WITHIN THE FOLLOWING LIMITS.

POSITION

- 1A — INLET TO PUMP FROM CONDENSATE STORAGE TANK
- 2 — MINIMUM NPSH = 7.0 m (1 METER ABOVE PUMP FLOOR)
- 3 — MAXIMUM PUMP TOTAL DYNAMIC HEAD 900 m FOR MODES A & C 186 m FOR MODES B & D
- 9 — MAXIMUM PRESSURE DROP BETWEEN POSITION 8 AND 9 = 0.11 MPa (SEE NOTE 5)
- 10 — MAXIMUM PRESSURE ALLOWED FOR RATED SYSTEM PERFORMANCE = 0.18 MPa A
- 19 — SUFFICIENT PRESSURE TO RETURN TO SUPPRESSION POOL
- 20, 21 — SUFFICIENT PRESSURE TO RETURN TO SUPPRESSION POOL

TABLE 1 VALVE POSITION CHART

VALVE	F004	F006	F001	F035	F036	F037	F039	F011	F009	F008
MODE A	O	C	O	O	O	O	O	C	C	C
MODE B	O	C	O	O	O	O	O	C	C	C
MODE C	O	O	C	O	O	O	O	C	C	C
MODE D	O	O	C	O	O	O	O	C	C	C
MODE E	C	O	C	O	O	O	O	C	T	T

O = OPEN C = CLOSE T = THROTTLE

E51–1020

Figure 5.4-9 – Reactor Core Isolation Cooling System PFD (Sheet 2 of 2)

NOTES:

1. PIPING HIGH POINT VENTS AND LOW POINT DRAINS ARE TO BE ADDED AS NECESSARY.
2. INSTRUMENT LINE DESIGN AND VALVING SHALL BE IN ACCORDANCE WITH INSTRUMENT PIPING SPECIFICATION A11-3030.
3. VALVE F028 IS REQUIRED IF THERE IS POTENTIAL FOR OVERPRESSURE.
4. FOR ADDITIONAL CONTROL ROOM LIGHTS, SYSTEM ALARMS AND REMOTE MANUAL SWITCHES, SEE THE RHR IBD E11-1030.
5. PROVISIONS FOR CONTAINMENT ISOLATION SHALL BE IN ACCORDANCE WITH CURRENT LICENSING REQUIREMENTS.
6. VALVE F002 SHALL BE LOCATED AT AN ELEVATION LOWER THAN THE SUPPRESSION POOL MINIMUM WATER LEVEL.
7. PUMP C001 COOLING WATER, IF REQUIRED, IS SPECIFIED IN P21-1010.
8. ALL PRIMARY CONTAINMENT ISOLATION VALVES SHALL BE LOCATED AS CLOSE AS POSSIBLE TO THE CONTAINMENT PENETRATION.
9. ALL MOTOR OPERATED VALVES ARE AC OPERATED UNLESS OTHERWISE NOTED.
10. EQUIPMENT IN SUBSYSTEMS A, B AND C SHALL HAVE THE SUFFIX LETTER A, B AND C RESPECTIVELY AFTER THE EQUIPMENT NUMBER.
11. FLUSHING CONNECTIONS AND TEMPORARY STRAINER SCREENS ON THE SUCTION SIDE OF ALL PUMPS SHALL BE PROVIDED.
12. DRYWELL PIPING RUNS SHALL BE HORIZONTAL OR VERTICAL UPWARDS FROM THE DRYWELL WALL TO THE POINT OF ATTACHMENT WITH THE REACTOR VESSEL.
13. THIS HIGH POINT VENT SHALL BE LOCATED AT THE HIGHEST POINT IN THE PIPING OUTSIDE THE DRYWELL BETWEEN VALVES F017 AND F018.
14. SUBSYSTEM "A" RETURNS TO RPV THROUGH FEEDWATER LINE "A".
15. DISCHARGE LINES FOR COOLING WATER TO BE ROUTED UPSTREAM OF SERVICE WATER RADIATION MONITORS.
16. VALVE F014 SHALL BE AS CLOSE AS POSSIBLE TO THE CONNECTIONS TO THE MAIN LINE.
17. DESIGN LINE SIZE WILL BE FINALIZED AT THE DETAILED DESIGN PHASE. ACTUAL LINE SIZES DETERMINED BY THE PIPING DESIGNER SHALL MEET THE PROCESS DATA HYDRAULIC REQUIREMENTS.
18. CHECK VALVE F006B(C) SHALL BE LOCATED AS CLOSE AS PRACTICAL TO THE REACTOR VESSEL NOZZLE.
19. VALVES F011A, F011B AND F011C ARE IN ELECTRICAL DIVISIONS 2, 3 AND 1 RESPECTIVELY. THE MANUAL CONTROL SWITCHES FOR VALVES F011A, F011B AND F011C ARE IN ELECTRICAL DIVISIONS 1,2 AND 3 RESPECTIVELY.
20. PIPING DESIGN SPECIFICATIONS ARE AS FOLLOWS:
    A. MAXIMUM OPERATING PRESSURE – SEE SPECIFIC BOUNDARY SYMBOL
    B. MAXIMUM OPERATING TEMPERATURE – SEE SPECIFIC BOUNDARY SYMBOL
    C. MATERIAL – CARBON STEEL
    D. PIPING SCHEDULE – INTERFACE
    E. DESIGN CLASS – SEE SPECIFIC BOUNDARY SYMBOL
    F. QC CLASS – SEE SPECIFIC BOUNDARY SYMBOL
    G. SEISMIC CLASS – RHR – As
    H. FLUID – WATER
21. AIR SUPPLY IS FROM INSTRUMENT AIR SYSTEM, SUPPL DOC 15. NITROGEN SUPPLY IS FROM HIGH PRESSURE NITROGEN GAS SUPPLY SYSTEM, SUPPL DOC 4.
22. STRAINER TYPE AS SUPPLIED WITH PUMP C002.
23. FLANGE CONNECTION USED FOR OCCASSIONAL SUPPRESSION POOL DRAINING.
24. DRAIN AND VENT PIPING DESIGN CONDITIONS ARE:

    MAXIMUM OPERATING PRESSURE – SAME AS MAIN LINE UPSTREAM OF VALVE (ATMOSPHERIC PRESSURE FROM LAST VALVE TO FUNNEL).

    MAXIMUM OPERATING TEMPERATURE – SAME AS MAIN LINE UPSTREAM OF VALVE (66°C FROM LAST VALVE TO FUNNEL).
25. UNIQUE PIPE NUMBERS ARE ASSIGNED SEQUENTIALLY FOR EACH RHR LOOP. RANGES OF NUMBERS ARE ALLOCATED FOR EACH LOOP AND TYPE OF PIPE AS FOLLOWS:

	LOOP A	LOOP B	LOOP C
PROCESS PIPING	001–100	101–200	201–300
DRAIN AND VENT PIPING	500–529	530–559	560–589
INSTRUMENT PIPING	700–729	730–759	760–789

26. THE VALVE TYPE FOR F043 AND F044 WILL BE DECIDED IN THE FINAL DESIGN.
27. THE RECORDING FUNCTION IS ACCOMPLISHED THROUGH MICROPROCESSOR CHANNEL OUTPUT TO PRINTER.
28. TWO ROOT VALVES CAN BE PROVIDED AT THE SUPPLIERS OPTION ON HIGH RADIATION/LOW PRESSURE DRAIN AND VENT LINES.
29. BYPASS VALVES F036A,B,C SHALL BE UTILIZED FOR WARMING UP THE RHR PIPING SYSTEM. THE FLOW WILL BE FROM THE REACTOR SIDE. THESE VALVES ARE ALSO USED DURING OPERABILITY TESTING OF TESTABLE CHECK VALVE F006.
30. PIPE WITH A DESIGN PRESSURE OF 2.82 MPa OR GREATER SHALL HAVE ITS MINIMUM WALL THICKNESS NO LESS THAN THAT OF A STANDARD WEIGHT PIPE. THICKER THAN STANDARD WEIGHT PIPE SHALL BE USED IF REQUIRED BY THE DESIGN PRESSURE OR OTHER REQUIREMENTS.
31. VALVES WITH A DESIGN PRESSURE OF 2.82 MPa OR GREATER SHALL BE A MINIMUM OF CLASS 300, OR OF A HIGHER CLASS IF REQUIRED BY THE DESIGN PRESSURE.
32. [LOCATE THE GATE VALVE OF THIS SPRING SECTION AT A DISTANCE GREATER THAN OR EQUAL TO 25 PIPE DIAMETERS FROM THE RPV NOZZLE. OTHERWISE, PERFORM STRESS ANALYSIS TO SHOW THAT STRESSES AND FATIGUE ARE ACCEPTABLE PER THE ASME CODE FROM THE CONCERN OF NRC BULLETIN 88-08, SUPPLEMENT 3(APRIL 11,1989) ON POTENTIAL THERMAL STRATIFICATION AND STRIPING DUE TO PERIODIC EXTERNAL LEAKAGE OF THE GATE VALVE.] *
33. THE THREE RETURN LINES BRINGING FLOW INTO THE SUPPRESSION POOL (S/P) SHALL HAVE AN EXIT DESIGN THAT PROMOTES S/P CIRCULATION AND MIXING FOR EFFICIENT COOLING. CONSIDERATIONS SHALL INCLUDE: (1) DIRECTING THE FLOW HORIZONTALLY WITH THE THREE LINES WORKING TOGETHER TO ACHIEVE CIRCULATION AROUND THE S/P'S ANNULAR SHAPE, (2) DIRECTING THE RETURN FLOW TO AVOID DIRECTLY ENTERING A SUCTION INLET, AND (3) SEPARATE THE RETURN LINES FROM THE SUCTION STRAINERS IN THE ELEVATION PLANE TO THE GREATEST EXTENT PRACTICAL, WITH THE RETURN LINES LOCATED NEAR THE S/P TOP AND THE SUCTION STRAINERS NEAR THE S/P BOTTOM.
34. VALVE TO HAVE MANUAL HAND WHEEL OPERABLE AT LOW DELTA PRESSURE FOR POTENTIAL NEED DURING FIRE WATER ADDITION MODE (NOTE VALVES F005C, F017C, AND F018C).
35. VALVE F005A SHALL BE LOCATED AS CLOSE AS PRACTICAL TO THE STEAM TUNNEL WALL.

* SEE SUBSECTION 3.9.1.7.

SUPPLEMENTAL DOCUMENTS UNDER THE FOLLOWING IDENTITIES ARE TO BE USED IN CONJUNCTION WITH THIS DRAWING.

	MPL NO.
1. RESIDUAL HEAT REMOVAL SYSTEM PFD	E11-1020
2. RESIDUAL HEAT REMOVAL SYSTEM IBD	E11-1030
3. SAMPLING SYSTEM P&ID	P91-1010
4. HIGH PRESSURE NITROGEN GAS SUPPLY SYSTEM P&ID	P54-1010
5. REACTOR WATER CLEANUP SYSTEM P&ID	G31-1010
6. FUEL POOL COOLING AND CLEANUP SYSTEM P&ID	G41-1010
7. VALVE GLAND LEAKAGE TREATMENT, RADWASTE SYSTEM P&ID	K17-1010
8. MAKE-UP WATER SYSTEM (CONDENSATE) P&ID	P13-1010
9. REMOTE SHUTDOWN SYSTEM IED	C61-1040
10. HIGH PRESSURE CORE FLOODER P&ID	E22-1010
11. REACTOR CORE ISOLATION COOLING SYSTEM P&ID	E51-1010
12. NUCLEAR BOILER SYSTEM P&ID	B21-1010
13. HIGH CONDUCTIVITY WASTE, RADWASTE SYSTEM P&ID	K17-1010
14. REACTOR BUILDING COOLING WATER SYSTEM P&ID	P21-1010
15. INSTRUMENT AIR SYSTEM P&ID	P52-1010
16. NOT USED	
17. NUCLEAR BOILER SYSTEM IBD	B21-1030
18. SAMPLING SYSTEM P&ID (INCLUDES PASS)	P91-1010
19. FIRE PROTECTION SYSTEM P&ID	U43-1010
20. LOW CONDUCTIVITY WASTE, RADWASTE SYSTEM P&ID	K17-1010
21. REACTOR ICD	B11-2020

SUPPORTING DOCUMENTS

1. PIPING AND INSTRUMENT SYMBOLS	A10-3030

LEGEND:

—|-|-|— LEAK TESTABLE DOUBLE DISC GATE VALVE

MPL NO. E11-1010

Figure 5.4-10 – Residual Heat Removal System P&ID (Sheet 1 of 7)

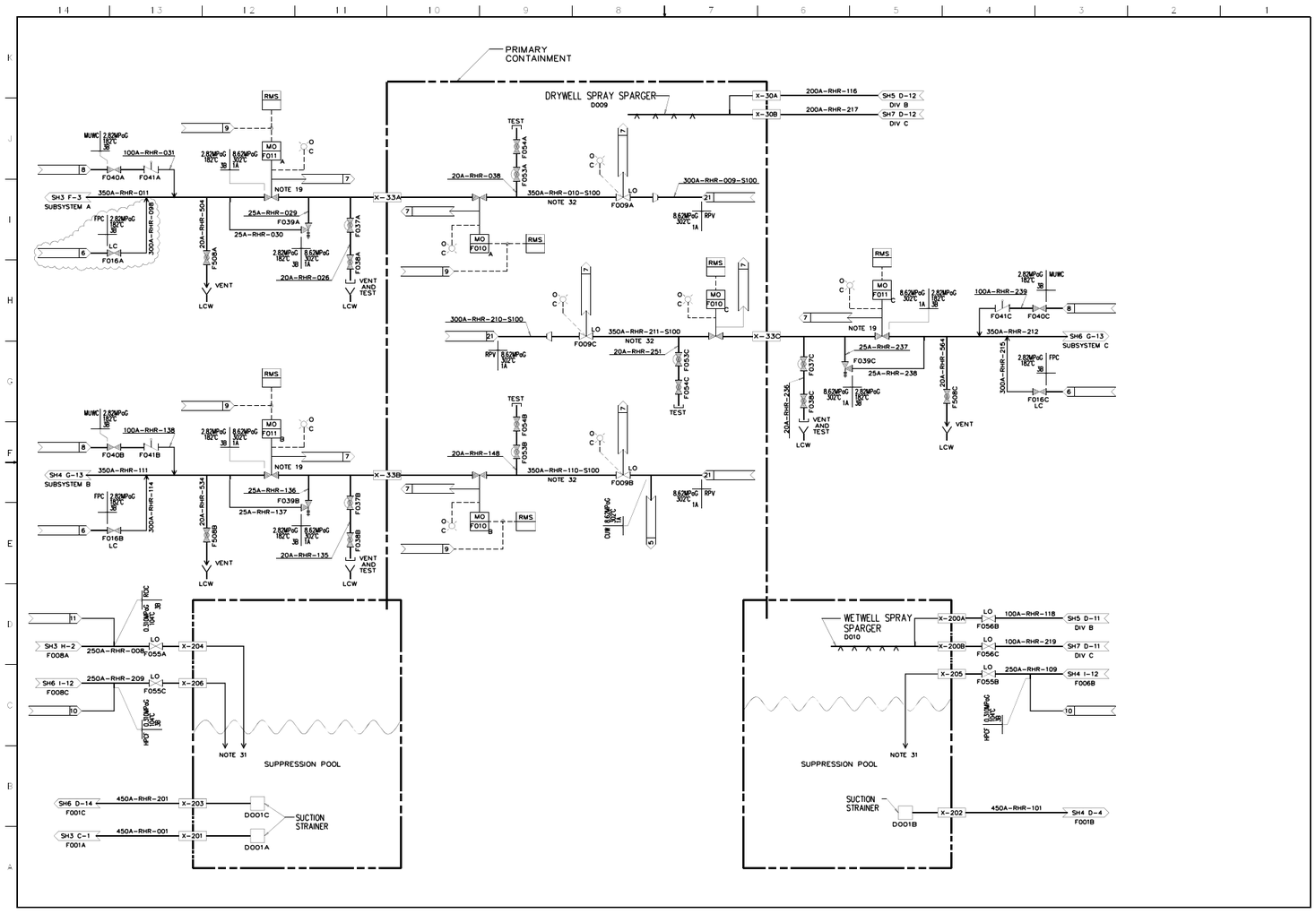

Figure 5.4-10 – Residual Heat Removal System P&ID (Sheet 2 of 7)

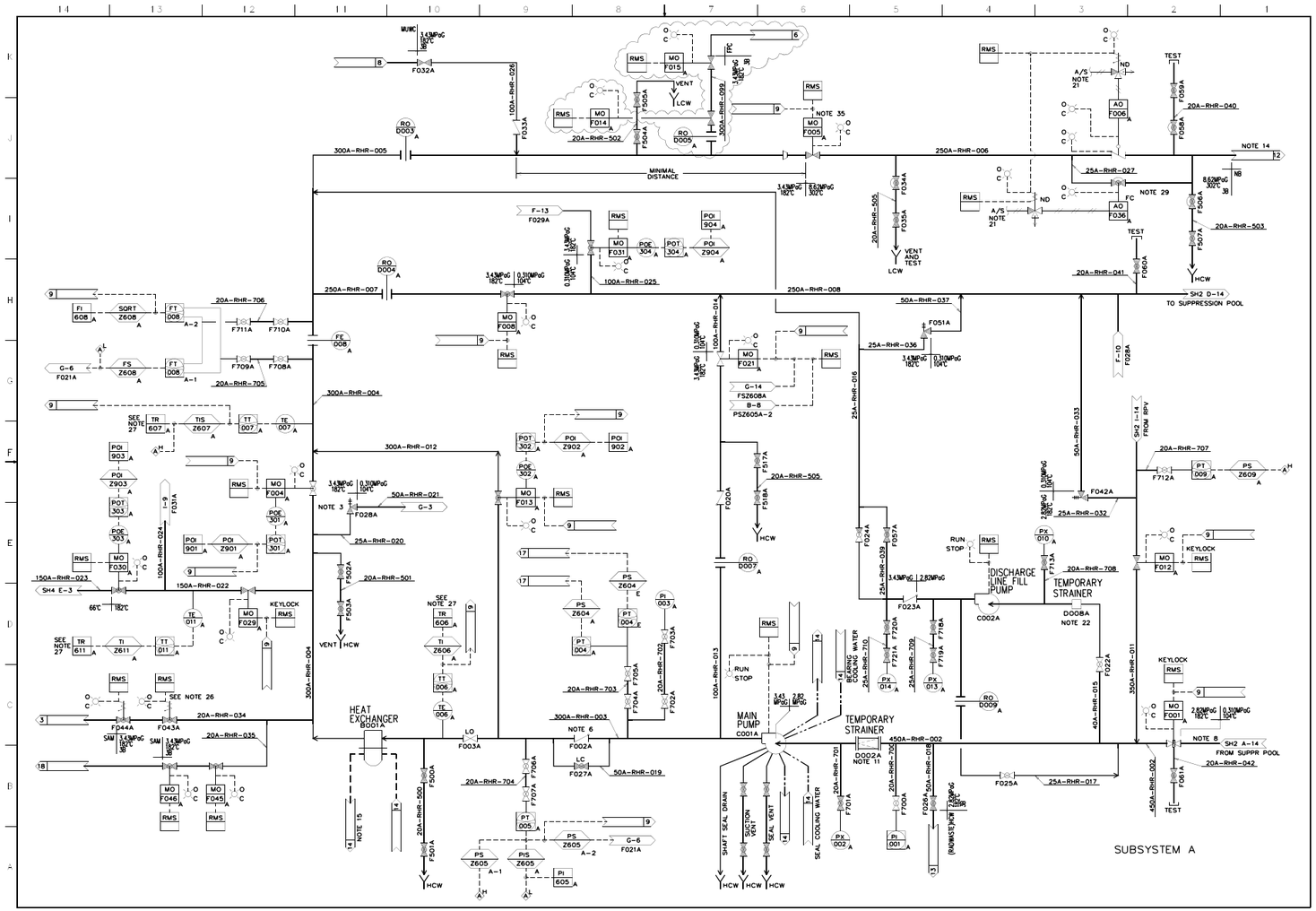

Figure 5.4-10 – Residual Heat Removal System P&ID (Sheet 3 of 7)

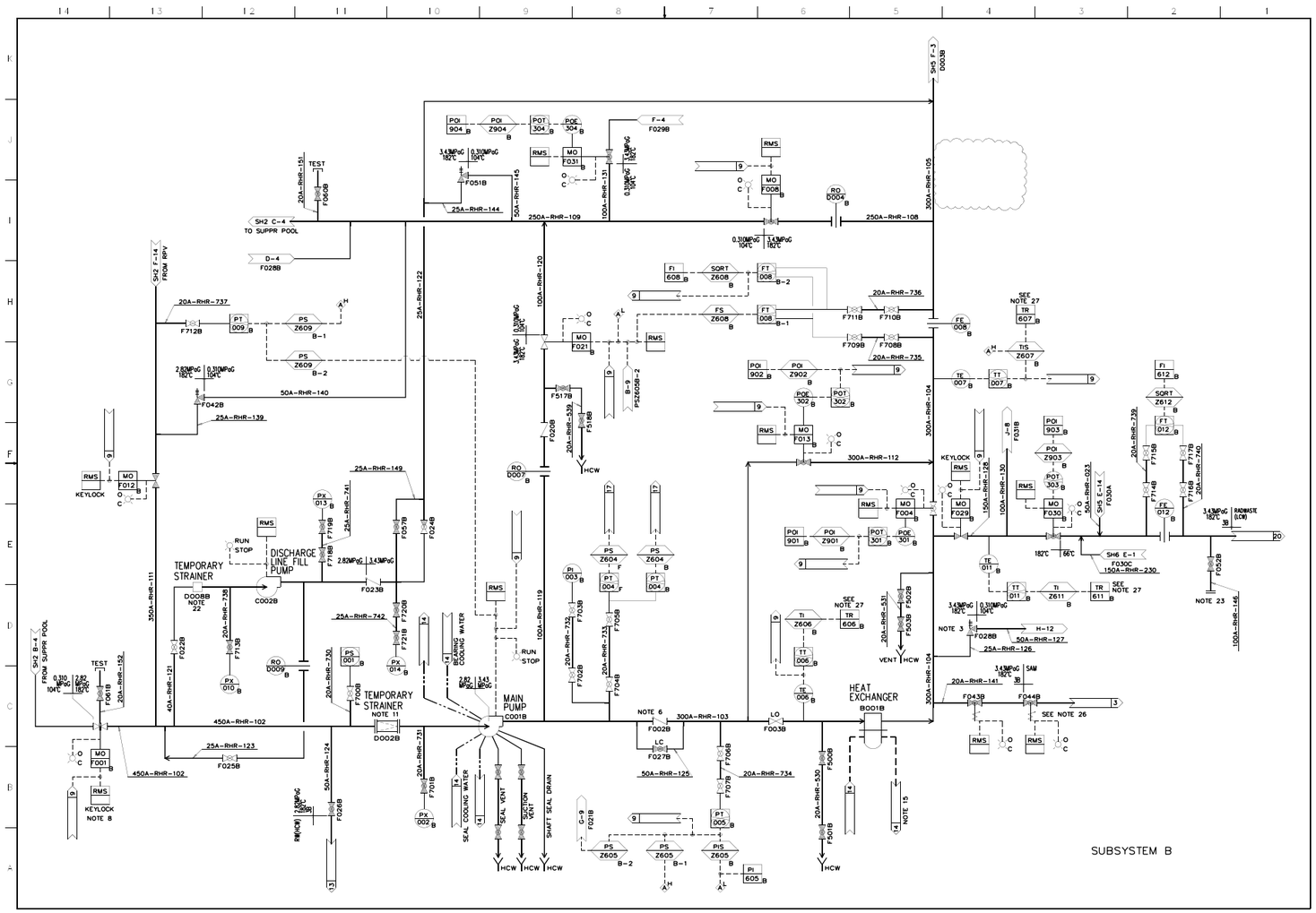

Figure 5.4-10 – Residual Heat Removal System P&ID (Sheet 4 of 7)

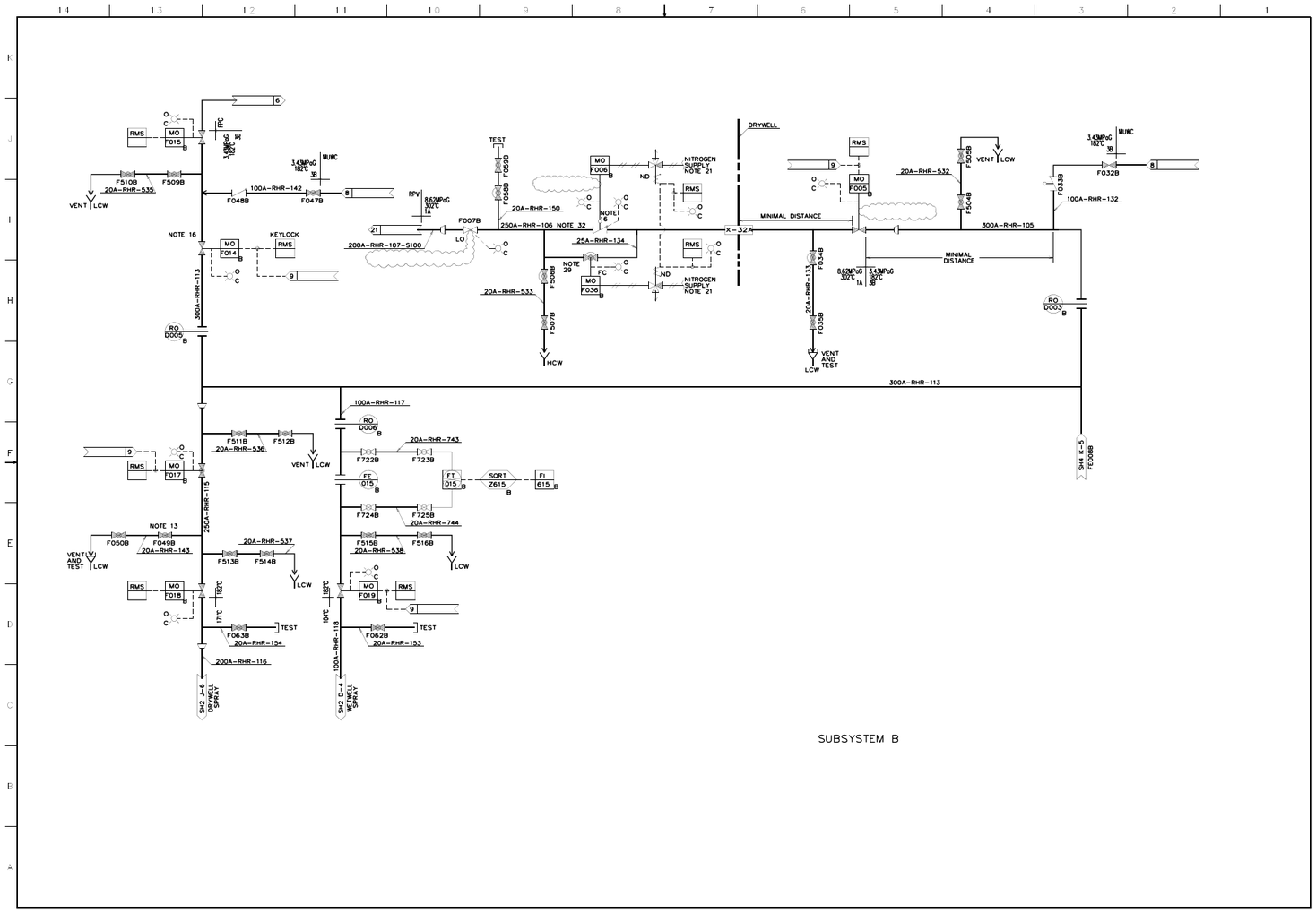

Figure 5.4-10 – Residual Heat Removal System P&ID (Sheet 5 of 7)

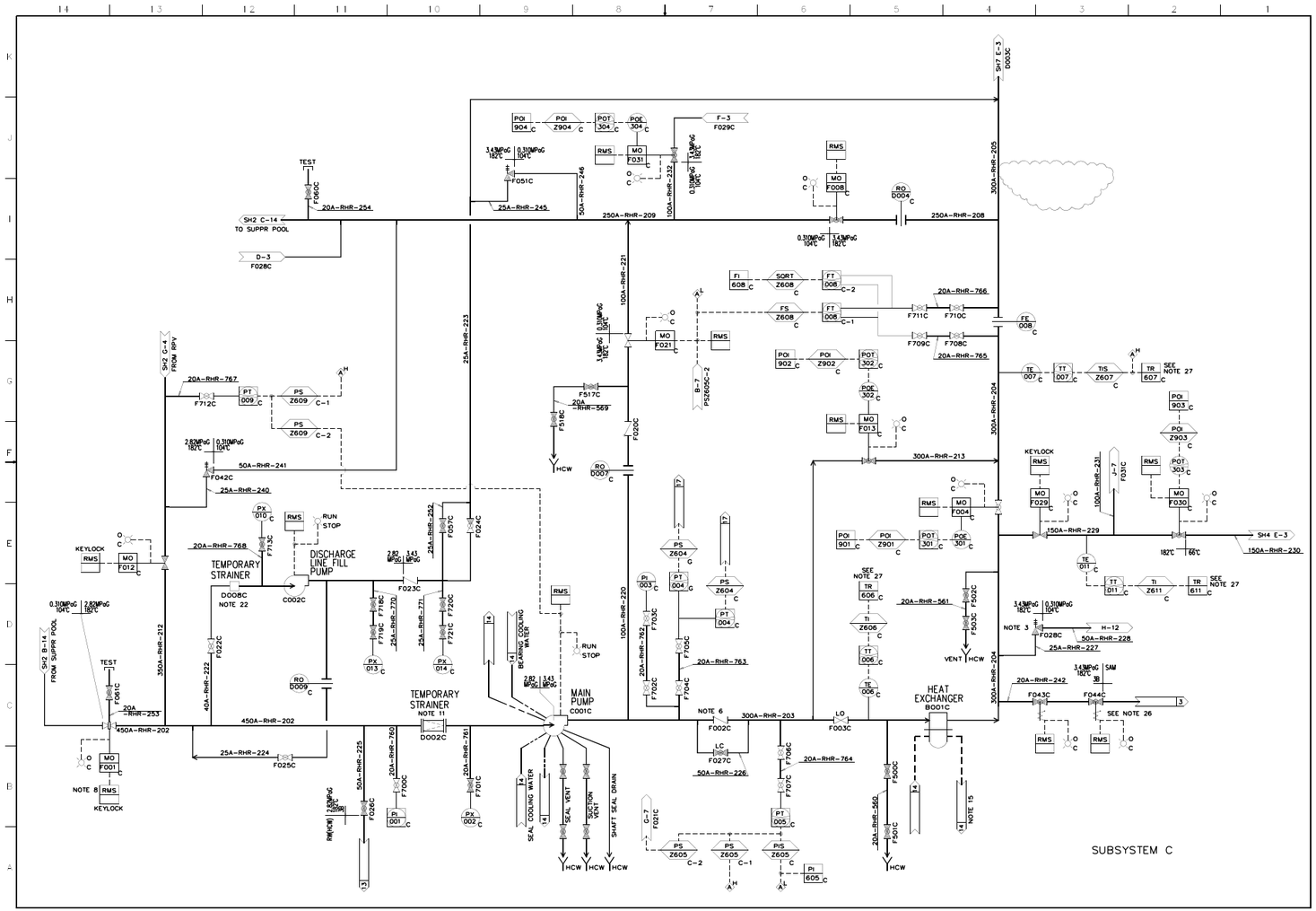

Figure 5.4-10 – Residual Heat Removal System P&ID (Sheet 6 of 7)

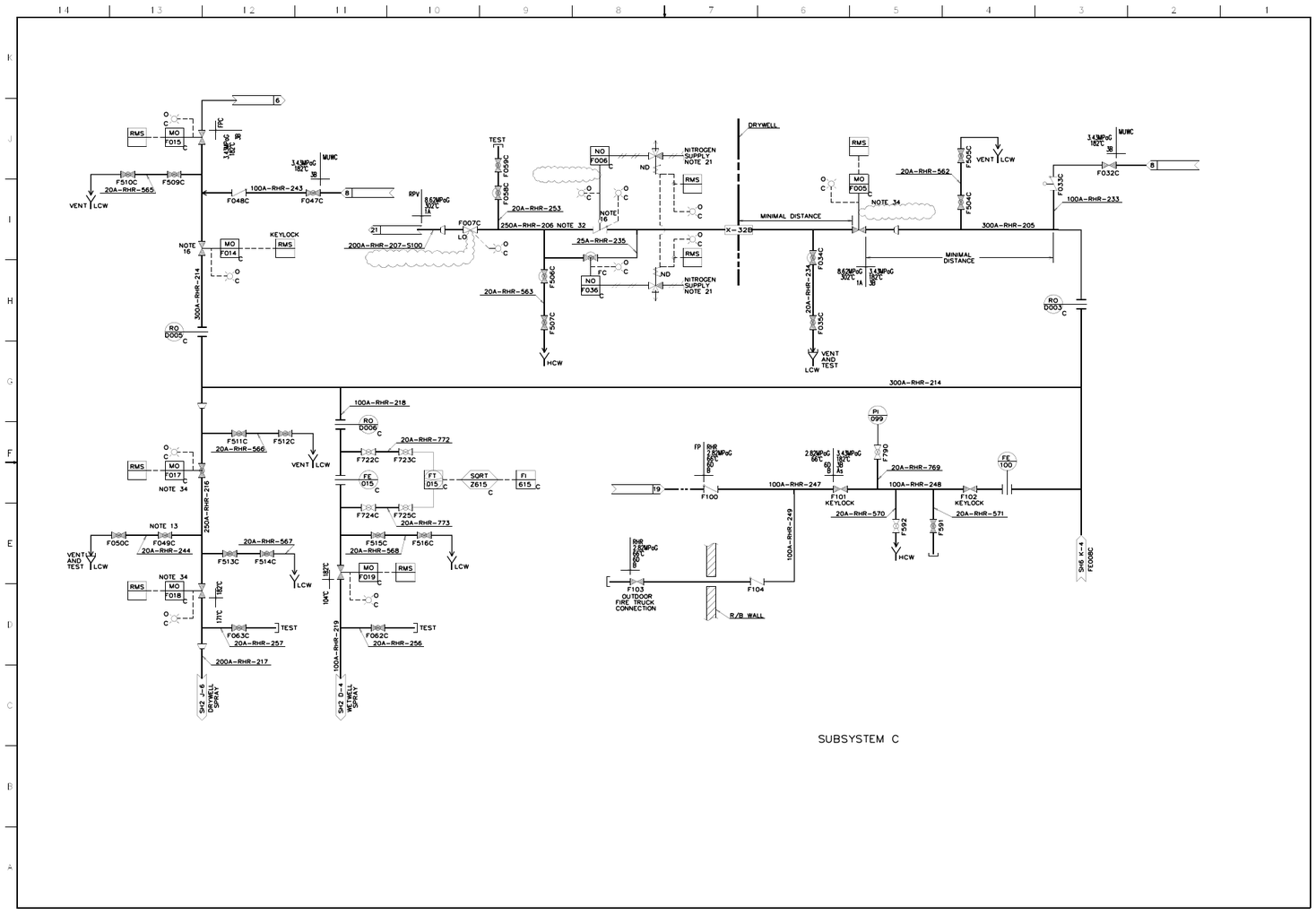

Figure 5.4-10 – Residual Heat Removal System P&ID (Sheet 7 of 7)

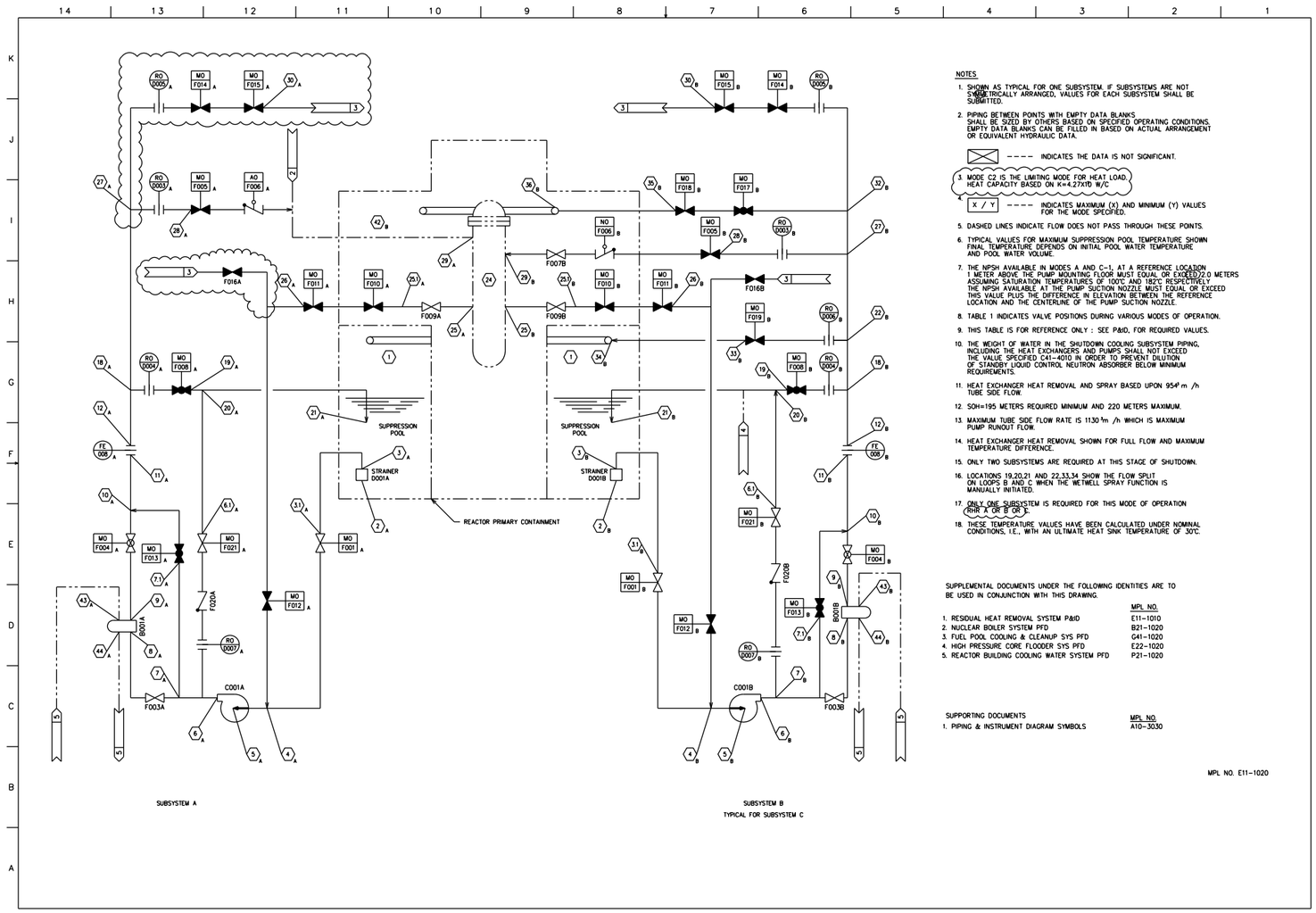

Figure 5.4-11 – Residual Heat Removal System PFD (Sheet 1 of 2)

MODE A POST ACCIDENT CORE COOLING WITH STRAINER 50% PLUGGED (SEE NOTE 1)

POSITION	1	2	3	4	5	6	7	8	9	10	11	12	27	28	29	24	43	44
FLOW m³/h	–	954													954	–		
TEMP °C	–	97/35						97/35								–		
PRESS MPa A	0.41/0.10	–	–	–	–											0.41/0.10		
Max PRESS DIFF-METERS	–				Δ TDH = 125		–	Δ H = 7.0		–	Δ H = 6.1		–	–			Δ H = 7.0	

HEAT REMOVAL CAPACITY PER HX LOOP = 82.48×10⁶ kJ/h — ALL SUBSYSTEMS

MODE C4 FUEL POOL COOLING – CLOSED LOOP WITH FUEL POOL (SEE NOTE 17)

POSITION	4	5	6	7	8	9	10	11	12	27	30	43	44
FLOW m³/h	350										350		
TEMP °C	52				52								
PRESS MPa A													
Max PRESS DIFF-METERS												Δ H = 7.0	

MODE B1 POST ACCIDENT SUPPRESSION POOL COOLING WITH STRAINER 50% PLUGGED (SEE NOTES 6 & 16)

POSITION	1	2	3	4	5	6	7	8	9	10	11	12	18	19B&C	20B&C	21B&C	1	22B&C	33B&C	34B&C	1	19A	20A	21A	1	43	44
FLOW m³/h	–	954											954	840	840	840	–	114	114	114	–	954	954	954	–		
TEMP °C	–	97						97									–				–				–		
PRESS MPa A	0.41/0.10	–	–	–	–												0.41/0.10				0.41/0.10				0.41/0.10		
Max PRESS DIFF-METERS					Δ TDH = 125			Δ H = 7.0			Δ H = 6.1																Δ H = 7.0

HEAT REMOVAL CAPACITY PER HX LOOP = 82.48×10⁶ kJ/h (3 HX'S OPERATING)(SEE NOTE 3) — SUBSYSTEM B & C (SEE NOTE 5 TYP ALL TABLES); SUBSYSTEM A

NOTES

A POST ACCIDENT CORE COOLING WITH STRAINER 50% PLUGGED

B-1 POST ACCIDENT SUPPRESSION POOL COOLING WITH STRAINER 50% PLUGGED

B-2 SUPPRESSION POOL COOLING DURING HOT STANDBY OPERATION

C-1 INITIATION OF SHUTDOWN COOLING AFTER BLOWDOWN TO MAIN CONDENSER AT FOUR HOURS

C-2 CONTINUATION OF SHUTDOWN COOLING AT 20 HOURS

C-3 CONTINUATION OF SHUTDOWN COOLING WITH RETURN TO UPPER CONTAINMENT POOL AT GREATER THAN 20 HOURS

C-4 FUEL POOL COOLING – CLOSED LOOP WITH FUEL POOL

D RHR TEST DURING PLANT OPERATION

E POST ACCIDENT CONTAINMENT SPRAY WITH HEAT REJECTION AND SCREEN 50% PLUGGED

F MINIMUM FLOW BYPASS MODE

S SYSTEM ON STANDBY DUTY

MODE B2 SUPPRESSION POOL COOLING DURING REACTOR HOT STANDBY OPERATION

POSITION	1	2	3	4	5	6	8	9	11	12	18	19	20	21	1	43	44
FLOW m³/h	–	954												954	–		
TEMP °C	–	49					49								–		
PRESS MPa A	0.10	–	–	–	–										0.10		
Max PRESS DIFF-METERS						Δ TDH = 125		Δ H = 7.0		Δ H = 6.1							Δ H = 7.0

HEAT REMOVAL CAPACITY PER HX LOOP = 16.67×10⁶ kJ/h — SUBSYSTEM B & C

MODE C1 INITIATION OF SHUTDOWN COOLING AFTER BLOWDOWN TO MAIN CONDENSER AT 4 HOURS Rx PRESS = 1.03 MPa A (SEE NOTES 1&13)

POSITION	24	25	4	5	6	7	8	9	10	11	12	27	28	29	24	43	44
FLOW m³/h	–	954												954	–		
TEMP °C	–	182					182								–		
PRESS MPa A	1.03	–	–	–	–										1.03		
Max PRESS DIFF-METERS					Δ TDH = 125			Δ H = 7.0			Δ H = 6.1						Δ H = 7.0

HEAT REMOVAL CAPACITY PER HX LOOP = 195.94×10⁶ kJ/h — ALL SUBSYSTEMS (3 HX'S OPERATING)

MODE S STANDBY DUTY

POSITION	1	2	3	4	5	6	8	9	11	12	19	26	28	32	33B&C
FLOW m³/h	N/A														N/A
TEMP °C	–	35/10									35/10	AMBIENT	35/10	35/10	35/10
PRESS MPa A															
Max PRESS DIFF-METERS	–	–	–	–	–	TDH = 0	–	–	–	–	–	–	–	–	–

MODE C2 CONTINUATION OF SHUTDOWN COOLING AT 20 HOURS RX PRESS = 0 MPa

POSITION	24	25	4	5	6	7	8	9	10	11	12	27	28	29	24	43	44
FLOW m³/h	–	954												954	–		
TEMP °C	–	52					52										
PRESS MPa A	0.10	–	–	–	–										0.10		
Max PRESS DIFF-METERS					Δ TDH = 125			Δ H = 7.0			Δ H = 6.1						Δ H = 7.0

HEAT REMOVAL CAPACITY PER HX LOOP = 22.05×10⁶ kJ/h — ALL SUBSYSTEMS (3 HX'S OPERATING)(SEE NOTE 15)

TABLE 1 VALVE POSITION CHART (SEE NOTE 8)

MODE	F001	F004	F005	F008	F010	F011	F012	F013	F014	F015	F016	F017	F018	F019	F021	STRAINER
A	O	O	O													50% P
B-1	O	O		O										O		50% P
B-2	O	O		O												50% P
C-1		O-T	O		O	O	O	T-C								CLEAR
C-2		O-T	O		O	O	O	T-C								CLEAR
C-3		O-T			O	O	O	T-C	O	O						CLEAR
C-4		O-T					O	T-C	O	O	O					CLEAR
D	O	O		O-T												CLEAR
E	O	O										T	O	O		50% P
F – POOL	O	O-T													O	CLEAR
S	O	O													O	CLEAR

O = VALVE OPEN
T = VALVE THROTTLED
T-C = VALVE THROTTLED OR CLOSED
O-T = VALVE OPEN OR THROTTLED
P = STRAINER PLUGGED
BLANK SPACE INDICATE VALVE IS CLOSED

LEGEND

Rx PRESS ---- REACTOR VESSEL PRESSURE
TDH --------- TOTAL DYNAMIC HEAD
SOH --------- SHUTOFF HEAD
ΔH --------- HEAD LOSS

MODE C3 CONTINUATION OF SHUTDOWN COOLING WITH RETURN TO UPPER CONTAINMENT POOL AT GREATER 20 HOURS Rx PRESS = 0 MPa

POSITION	24	25	4	5	6	7	8	9	10	11	12	27	30	43	44
FLOW m³/h	–	954											954		
TEMP °C	–	52					52								
PRESS MPa A	0.10														
Max PRESS DIFF-METERS					Δ TDH = 125			Δ H = 7.0			Δ H = 6.1			Δ H = 7.0	

HEAT REMOVAL CAPACITY PER HX LOOP = 22.05×10⁶ kJ/h — SUBSYSTEM B & C (2 HX'S OPERATING)(SEE NOTE 15)

MODE D RHR TEST DURING PLANT OPERATION

POSITION	1	2	3	4	5	6	7	8	9	10	11	12	18	19	20	21	1	43	44
FLOW m³/h	–	954														954	–		
TEMP °C	–	35/10														35/10	–		
PRESS MPa A	0.10																0.10		
Max PRESS DIFF-METERS						Δ TDH = 125			Δ H = 7.0			Δ H = 6.1							Δ H = 7.0

— ALL SUBSYSTEMS

MODE E POST ACCIDENT CONTAINMENT SPRAY WITH HEAT REMOVAL AND STRAINER 50% PLUGGED

POSITION	1	2	3	4	5	6	7	8	9	10	11	12	22	33	34	1	32	35	36	42	43	44
FLOW m³/h	–	954											954	114	114	–	840	840	840	–		
TEMP °C	–	97/52						97/52								–				–		
PRESS MPa A	0.41/0.10	–	–	–	–											0.41/0.10				0.41/0.10		
Max PRESS DIFF-METERS					Δ TDH = 125			Δ H = 7.0			Δ H = 6.1				Δ H = 28				Δ H = 28			Δ H = 7.0

HEAT REMOVAL CAPACITY PER HX LOOP = 82.48×10⁶ kJ/h — SUBSYSTEM B & C (2 HX'S OPERATING)(SEE NOTE 11)

MODE F MINIMUM FLOW BYPASS MODE

POSITION	1	2	3	4	5	6	61	20	21	1
FLOW m³/h	–	148							148	–
TEMP °C	–	35/10							35/10	–
PRESS MPa A	0.10									0.10
Max PRESS DIFF-METERS					SEE NOTE 12					

— ALL SUB SYSTEMS

DESIGN PRESSURE AND TEMPERATURE TABLE (SEE NOTE 9)

POSITION	3	3.1	4	5	6	7	7	8	9	10	7	7.1	10	10	11	12	12	18	22 B & C	27	28	29 B & C	29A
DESIGN PRESS MPa G	0.31	2.82		RHR PUMP	3.43	3.43		RHR HX	3.43	3.43			3.43						3.43			8.62	
DESIGN TEMP °C	104	182			182	182			182	182			182		182				182			302	SEE B21-T020
EST. LINE SIZE mm	450A				300A	300A			300A	300A			300A	300A	FLOW ELEM	300A			300A			250A	
	POOL TO PUMP				PUMP TO HP BYPASS LINE	HEAT EXCHANGER LINE			HX BYPASS LINE				HX TO FLOW ELEMENT					FLOW ELEMENT TO Rx VESSEL					

POSITION	12 B & C	18 B & C	19 B & C	21 B & C	12 B & C	18 B & C	22 B & C	33 B & C	34 B & C	25	25.1	26	4	18	27	28	29 B & C	29A
DESIGN PRESS MPa G	3.43		0.31		3.43		3.43			8.62		2.82		3.43		8.62		SEE B21-T020
DESIGN TEMP °C	182		104		182		182		104	302				182		302		
EST. LINE SIZE mm	300A		250A		300A		100A			350A		350A		300A		250A		
	FLOW ELEMENT TO SUPPRESSION POOL				FLOW ELEMENT TO WETWELL SPRAY					SHUTDOWN SUCTION				SHUTDOWN RETURN TO Rx VESSEL				

POSITION	27	30		6	6.1	20	32	35	36
DESIGN PRESS MPa G	3.43			3.43	0.31		3.43		3.43
DESIGN TEMP °C	182		SEE C41-T020	182	104		182		171
EST. LINE SIZE mm	300A			100A			250A		200A
	SHUTDOWN RETURN TO UPPER POOL			MINIMUM FLOW BYPASS			FLOW TO DRYWELL SPRAY		

Figure 5.4-11 – Residual Heat Removal System PFD (Sheet 2 of 2)

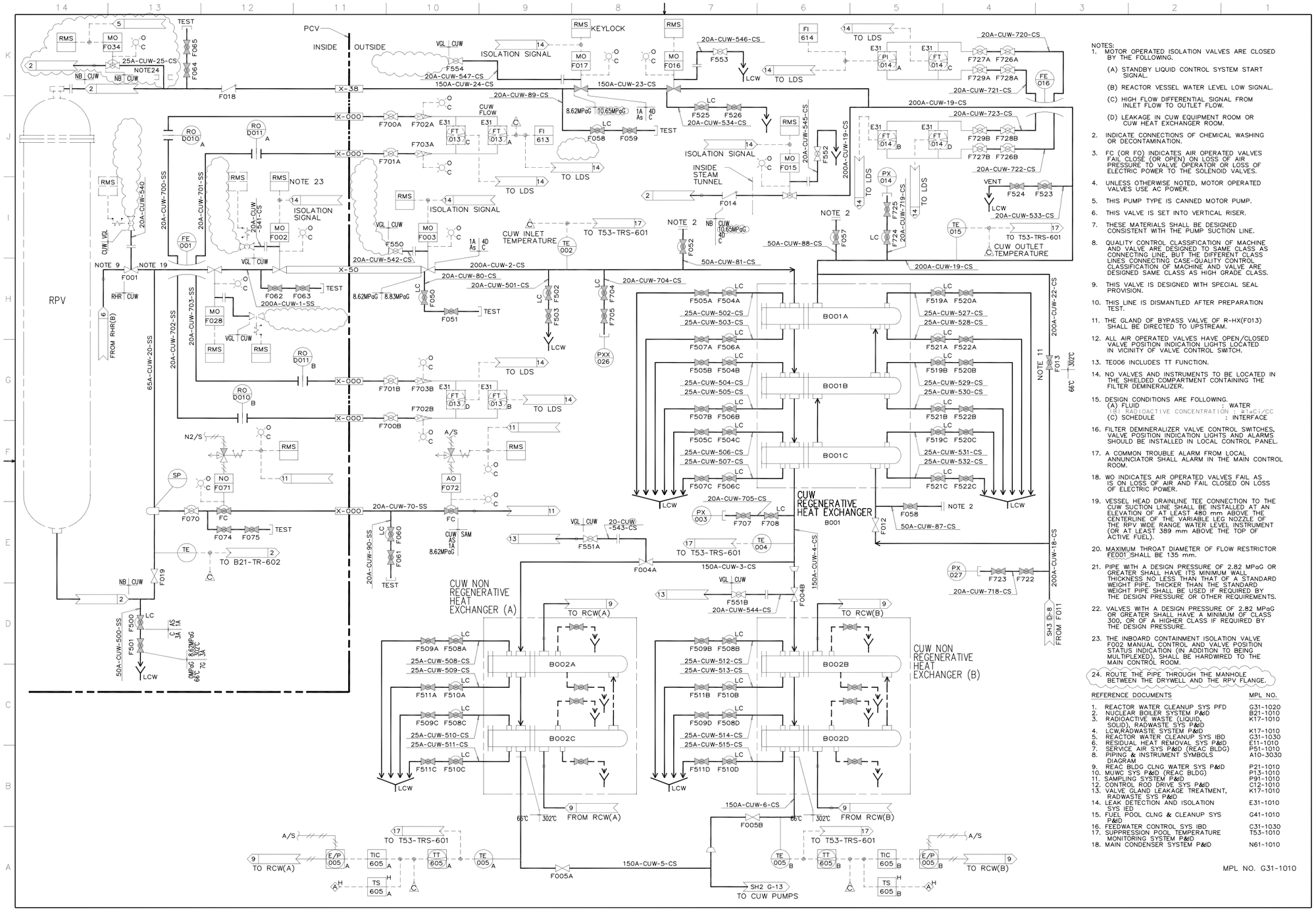

Figure 5.4-12 – Reactor Water Cleanup System P&ID (Sheet 1 of 4)

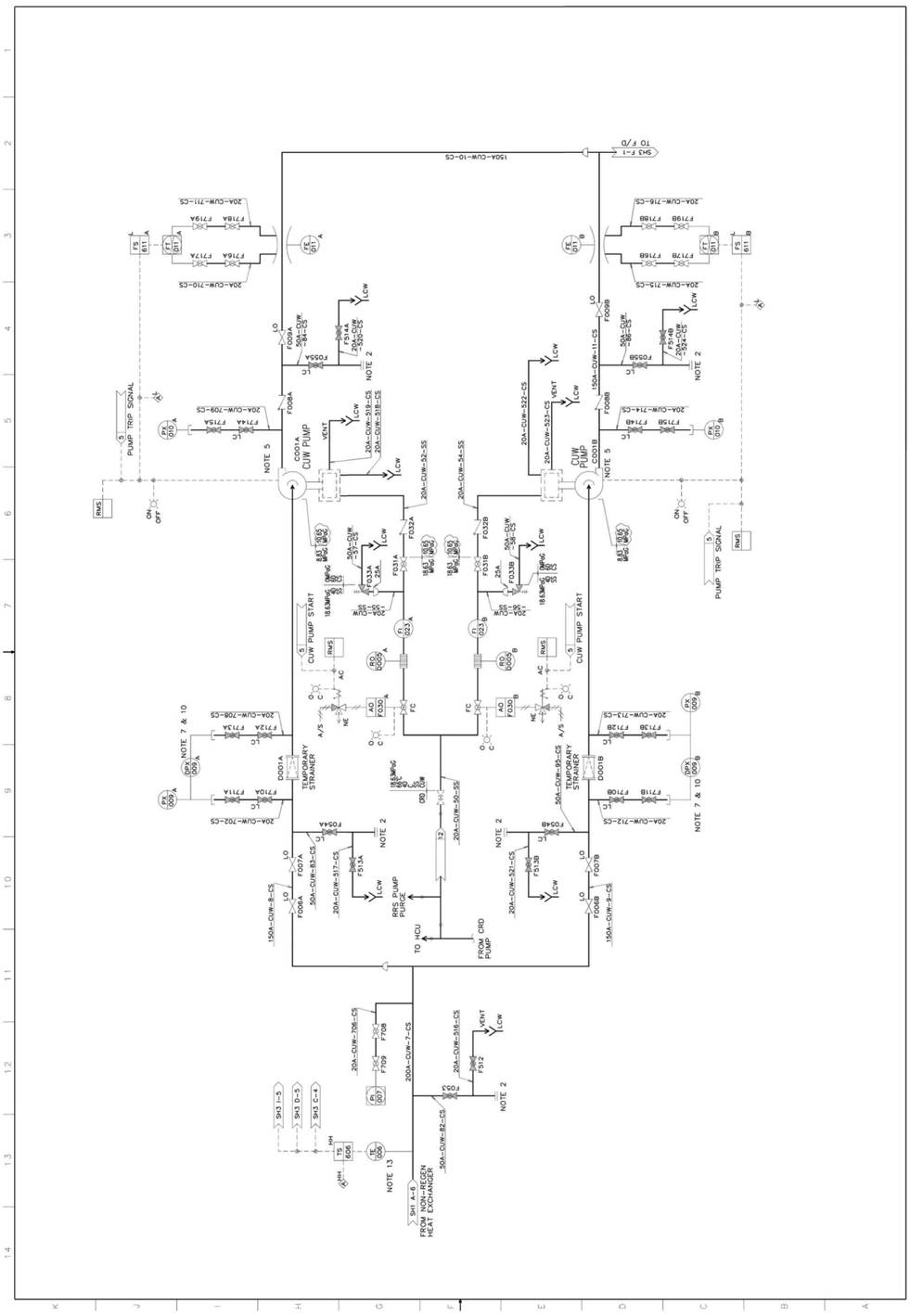

Figure 5.4-12 – Reactor Water Cleanup System P&ID (Sheet 2 of 4)

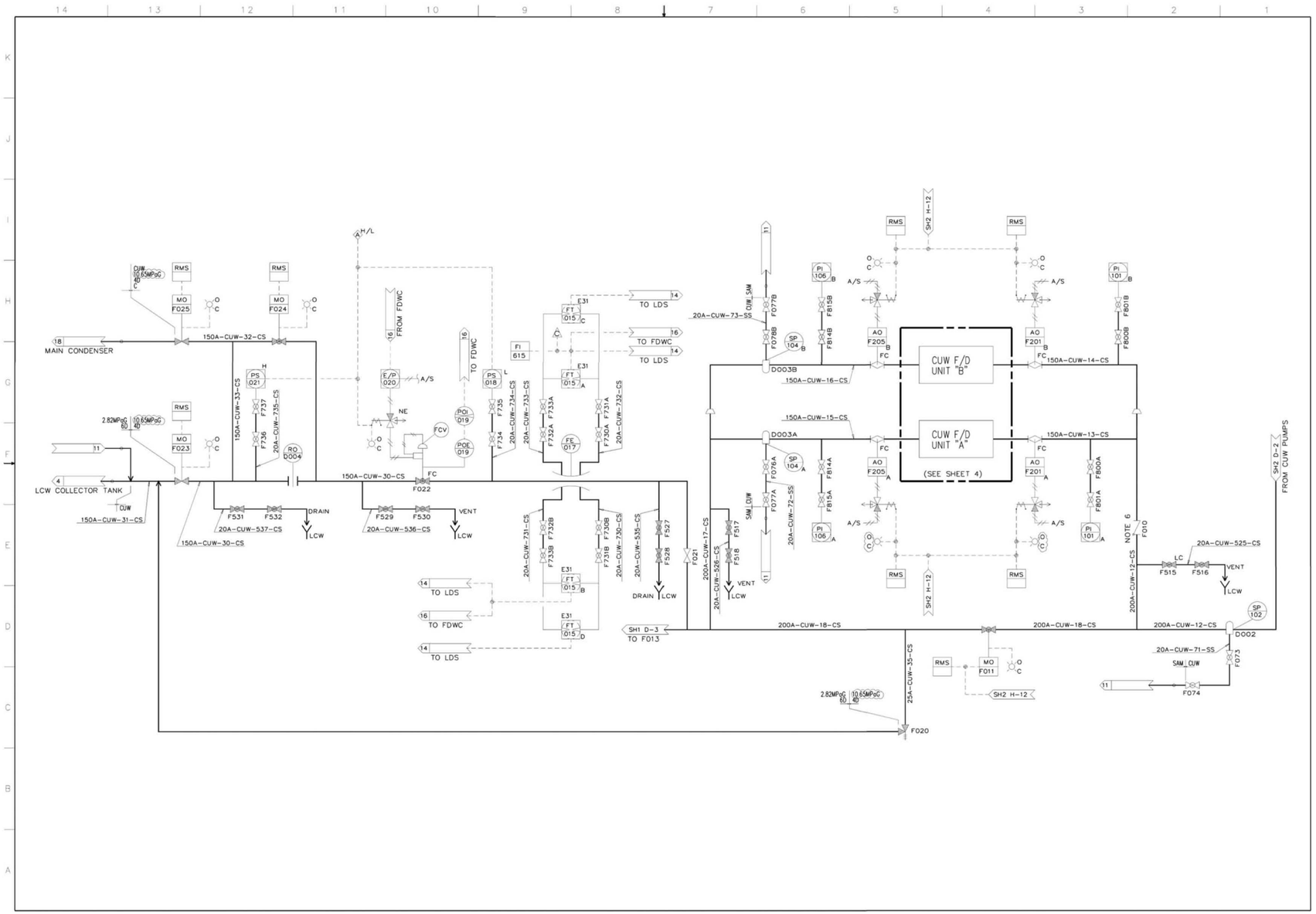

Figure 5.4-12 – Reactor Water Cleanup System P&ID (Sheet 3 of 4)

MODE A: NORMAL OPERATION (REACTOR PRESS 7.17MPa A)

	1	2	3	4	5	6	7	8 A/B	9 A/B	10	11A(B)	12A(B)	13	14A(B)	15A(B)	16	17	18	19	20	21	22	23	24	25	26	27	28	29 A/B	30 A/B	31
FLOW (m^3/h)	30	172	202			202	160	80	77	154	154	154	154	154	154	–	154	183			183	–	–	–	–	–	–	–	140	140	–
PRESS (MPa A)	7.50					7.28	7.21	7.28	7.21		7.18	8.36		8.35	7.93	–	7.98	7.91				–	–	–	–	–	–				–
TEMP (℃)	278					278	112	112	49		49	49.5			49.5	–	49	225			225	–	–	–	–	–	–	–	Max 35		–
Max ALLOWABLE PRESS LOSS (m)			ΔP = 3			NOTE 6					TDH = 120			ΔP = 36			NOTE 6		ΔP = 3										ΔP = 10		

MODE B: START-UP OPERATION (REACTOR PRESS 1.08MPa A) NOTE 5

	1	2	3	4	5	6	7	8 A/B	9 A/B	10	11A(B)	12A(B)	13	14A(B)	15A(B)	16	17	18	19	20	21	22	23	24	25	26	27	28	29 A/B	30 A/B	31
FLOW (m^3/h)	NOTE 8		172			172	155	155	77	154	154	154	154	154	154	–	116	–			127	41					41	–	140	140	–
PRESS (MPa A)	1.10	1.01											–																		–
TEMP (℃)	179					179	102	102	Max 54						Max 54	–	Max 54	156	156	156	156	Max 54					Max 54	–	Max 35		–
Max ALLOWABLE PRESS LOSS (m)			ΔP = 3			NOTE 6					TDH = 120			ΔP = 36			NOTE 6		ΔP = 3												

MODE C: HOT STANDBY OPERATION (MAIN CONDENSER AVAILABLE) (REACTOR PRESS 7.17MPa A)

	1	2	3	4	5	6	7	8 A/B	9 A/B	10	11A(B)	12A(B)	13	14 A/B	15 A/B	16	17	18	19	20	21	22	23	24	25	26	27	28	29 A/B	30 A/B	31
FLOW (m^3/h)	NOTE 8		207			207	161	81	77	154	154	154	–	–	–	154	154	186			186	–	–	–	–	–	–	–	140	140	–
PRESS (MPa A)	7.31					7.27	7.20	7.28	7.21		7.18	8.36	–	–	–	8.35	7.98	7.91				–	–	–	–	–	–	–			–
TEMP (℃)	278					278	118	118	Max 54			Max 54	–	–	–	Max 54	Max 54	236			236	–	–	–	–	–	–	–	Max 35		–
Max ALLOWABLE PRESS LOSS (m)			ΔP = 3			NOTE 6					TDH = 120					ΔP = 36	NOTE 6		ΔP = 3												

MODE D: HOT STANDBY OPERATION (MAIN CONDENSER ISOLATION) (REACTOR PRESS 7.61MPa A)

	1	2	3	4	5	6	7	8 A/B	9 A/B	10	11A(B)	12A(B)	13	14A(B)	15A(B)	16	17	18	19	20	21	22	23	24	25	26	27	28	29 A/B	30 A/B	31
FLOW (m^3/h)	NOTE 8		209			209	162	81	77	154	154	154	–	154	154	154	154	187			187	–	–	–	–	–	–	–	140	140	–
PRESS (MPa A)	7.72												–	–	–							–	–	–	–	–	–	–	–	–	–
TEMP (℃)	292					292	119	119	Max 54			Max 54	–	–	–	Max 54	Max 54	240			240	–	–	–	–	–	–	–	Max 35		–
Max ALLOWABLE PRESS LOSS (m)			ΔP = 3			NOTE 6					TDH = 120					ΔP = 36	NOTE 6		ΔP = 3												

MODE E: REFUELING (RECIRCULATING) (REACTOR PRESS: ATMOSPHERIC PRESS)

	1	2	3	4	5	6	7	8 A/B	9 A/B	10	11A(B)	12A(B)	13	14A(B)	15A(B)	16	17	18	19	20	21	22	23	24	25	26	27	28	29 A/B	30 A/B	31
FLOW (m^3/h)	NOTE 8		154				154	77	77	154	154	154	154	154	154	–	154				154	–	–	–	–	–	–	–	140	140	–
PRESS (MPa A)	STP										STP					–						–	–	–	–	–	–	–			–
TEMP (℃)	Max 52							Max 52	Max 49		Max 49	Max 49.5			Max 49.5	–	Max 49.5	Max 52			Max 52	–	–	–	–	–	–	–	Max 35		–
Max ALLOWABLE PRESS LOSS (m)			ΔP = 3			NOTE 6					TDH = 120			ΔP = 36			NOTE 6		ΔP = 3												

MODE F: AFTER REFUELING (REACTOR PRESS: ATMOSPHERIC PRESS) NOTE 5

	1	2	3	4	5	6	7	8 A/B	9 A/B	10	11A(B)	12A(B)	13	14A(B)	15A(B)	16	17	18	19	20	21	22	23	24	25	26	27	28	29 A/B	30 A/B	31
FLOW (m^3/h)	NOTE 8		154				154	77	77	154	154	154	154	154	154	–	–	–	–	–	–	154						154	140	140	–
PRESS (MPa A)	STP										STP					–	–	–	–	–	–										–
TEMP (℃)	Max 52														Max 52	–	–	–	–	–	–	Max 52						Max 52	Max 35	–	–
Max ALLOWABLE PRESS LOSS (m)			ΔP = 3			NOTE 6					TDH = 120			ΔP = 36																

MODE G: RPV SPRAY (REACTOR PRESS 1.03 MPa A)NOTE 7

	1	2	3	4	5	6	7	8 A/B	9 A/B	10	11A(B)	12A(B)	13	14A(B)	15A(B)	16	17	18	19	20	21	22	23	24	25	26	27	28	29 A/B	30 A/B	31
FLOW (m^3/h)	NOTE 8		172			172	Max 172	Max 172	76	152	152	152	152	152	152	–	152	Max 172		Max 172	–	–	–	–	–	–	–	–	140	140	Max 172
PRESS (MPa A)																–					–	–	–	–	–	–	–	–			1.03
TEMP (℃)	183					183			Max 49		Max 49	Max 49.5			Max 49.5	–	Max 49.5	148		148	–	–	–	–	–	–	–	–	Max 35		
Max ALLOWABLE PRESS LOSS (m)			ΔP = 3			NOTE 6					TDH = 120			ΔP = 36			NOTE 6		ΔP = 3												

TABLE 1 VALVE OPENING/CLOSING CONDITION

MODE \ VALVE NO	F002	F003	F011	F015	F016	F022	F023	F024	F201	F205
A	O	O	C	O	C	C	C	C	O	O
B	O	O	C	O	C	T	O	C	O	O
C	O	O	O	O	C	C	C	C	C	C
D	O	O	O	O	C	C	C	C	C	C
E	O	O	C	O	C	C	C	C	O	O
F	O	O	C	C	C	O	O	O	O	O
G	O	O	C	C	O	C	C	C	O	O

O OPENING C CLOSING T THROTTLED

Figure 5.4-13 – Reactor Water Cleanup System PFD (Sheet 2 of 2)

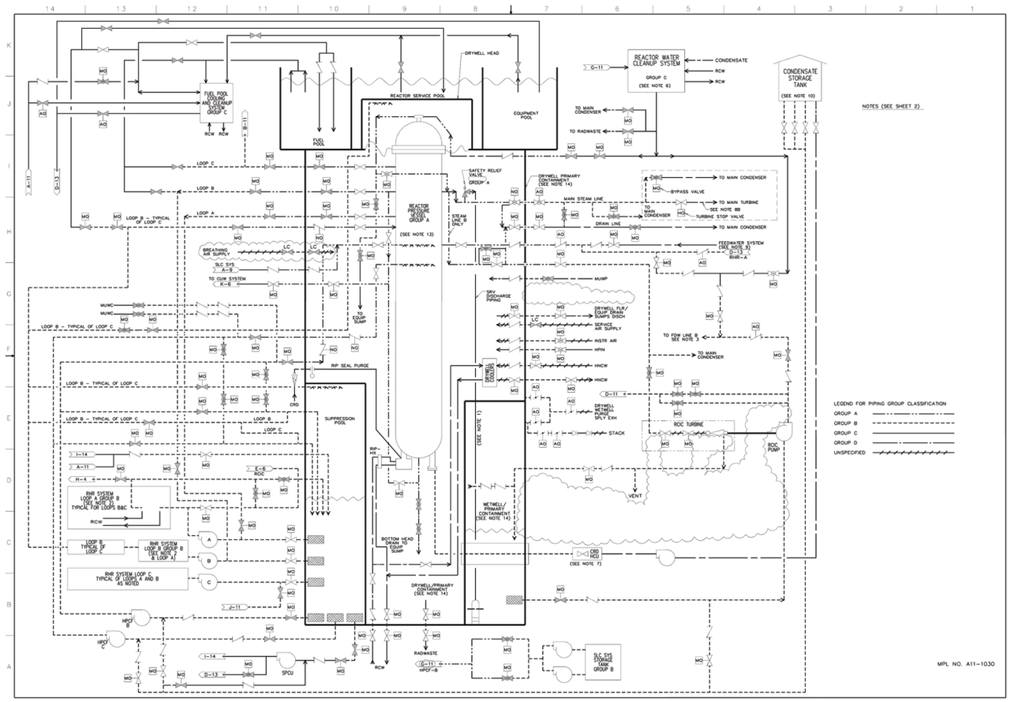

Figure 6.2-38 – Plant Requirements, Group Classification and Containment Isolation Diagram (Sheet 1 of 2)

NOTES:

1. A SEPARATE LINE IS TO BE PROVIDED FOR EACH SAFETY/RELIEF VALVE.

2. RESIDUAL HEAT REMOVAL SYSTEM LOOPS (SUBSYSTEMS) A AND B ONLY ARE REPRESENTED AS TYPICAL LOOPS. LOOP C IS SIMILAR TO LOOP B.

3. RCIC INJECTION VIA FEEDWATER SYSTEM B.

4. TABLE 3.2-1 OF 23A6100 IS CONTROLLING FOR GROUP CLASSIFICATION AND CONTAINMENT ISOLATION REQUIREMENTS. THE PRESSURE INTEGRITY OF NUCLEAR COMPONENTS SPECIFICATION (MPL No. A11-3010) DESCRIBES REQUIREMENTS FOR EACH GROUP CLASSIFICATION. INDIVIDUAL SYSTEMS P&IDS SPEC(FY) SYSTEM AND COMPONENTS REQUIREMENTS.

5. GROUP CLASSIFICATION CHANGES AT VALVE UNLESS OTHERWISE STATED. VALVES SHALL COMPLY TO HIGHEST CLASSIFICATION. INLINE PUMPS SHALL HAVE LINE GROUP CLASSIFICATION.

6. REACTOR WATER CLEANUP SYSTEM

THE FILTER-DEMINERALIZER PRECOAT/BACKWASH PORTION OF THE CUW DOWNSTREAM THE HIGH PRESSURE BLOCK VALVES SHALL BE GROUP D.

7. CONTROL ROD DRIVE-HYDRAULIC CONTROL UNIT

THE PORTION OF THE CRD SYSTEM WHICH IS RELATED TO THE SCRAM FUNCTION IS GROUP B. THE PORTION OF THE CRD SYSTEM WHICH IS NOT RELATED TO THE SCRAM FUNCTION IS GROUP D.

8. MAIN STEAM LINE / BRANCH LINES

A. THE MAIN STEAM LINE INSPECTION RECORDS PERTAINING TO THE LINES BETWEEN THE SHUT-OFF VALVE AND TURBINE STOP VALVE SHALL BE MAINTAINED FOR THE LIFE OF THE PLANT. THESE RECORDS SHALL INCLUDE DATA PERTAINING TO QUALIFICATION OF INSPECTION PERSONNEL, EXAMINATION PROCEEDURES. AND EXAMINATION RESULTS.

B. THE MAIN STEAM LINES AND INLINE COMPONENTS UP TO THE TURBINE STOP VALVES SHALL BE GROUP B. BEYOND IS GROUP D.

C. BRANCH LINES OF MSL BETWEEN THE EXTERNAL ISOLATION VALVE AND THE TURBINE STOP VALVE SHALL BE GROUP B OUT TO AND INCLUDING THE FIRST VALVE CAPABLE OF TIMELY ACTUATION.

9. FEEDWATER

BRANCH LINES OF THE FW LINE BETWEEN THE SECOND AND THIRD VALVE OUT TO AND INCLUDING THE FIRST REMOTE ACTUATED VALVE TO BE GROUP B.

10. CONDENSATE STORAGE TANK

THE CONDENSATE STORAGE TANK WILL BE DESIGNED, FABRICATED, AND TESTED TO MEET THE INTENT OF API STANDARD API 650. IN ADDITION, THE SPECIFICATIONS FROM THIS TANK WILL REQUIRE (1) 100 PERCENT SURFACE EXAMINATION OF THE SIDE WALL TO BOTTOM JOINT AND (2) 100 PERCENT VOLUMETRIC EXAMINATION OF THE SIDE WALL WELD JOINTS, GROUP D CLASSIFICATION.

11. PNEUMATIC PIPING. VESSELS & FITTINGS. (FIG Ⅲ)

PNEUMATIC SYSTEMS ASSOCIATED WITH ACTUATION OF SAFETY RELATED VALVES TO ACCOMPLISH SAFETY FUNCTIONS (E.G. MAIN STEAM SAFETY/RELIEF VALVES) ARE CLASSIFIED GROUP C. THIS CLASSIFICATION IS INTENDED TO APPLY TO COMPONENTS SUCH AS THE AIR PIPING, FITTINGS, AND ACCUMULATOR TANKS. THIS CLASSIFICATION DOES NOT APPLY TO COMPONENTS OF THE SYSTEM SUCH AS AIR CONTROL VALVES, AIR CHECK VALVES, AND CYLINDER (OR DIAPHRAM) AIR ACTUATORS. THESE COMPONENTS ARE CONSIDERED AS "SPECIAL EQUIPMENT" AND ARE SELECTED BASED ON ENGINEERING REVIEWS, OPERATING EXPERIENCE, AND TESTING AS BEING THE MOST SUITABLE FOR THE APPLICATION. SUCH EQUIPMENT IS REQUIRED TO BE QUALIFIED TO DEMONSTRATE OPERABILITY DURING NORMAL AND EMERGENCY AMBIENT CONDITIONS. COMPONENTS NORMALLY FURNISHED WITH THE PROCESS VALVE (E.G. AIR CONTROL VALVES, AIR ACTUATORS) ARE PERFORMANCE TESTED WITH THE VALVE AS PART OF ITS ACCEPTANCE TEST PROCEDURE.

12. INSTRUMENT. SAMPLE & OTHER SMALL LINES (FIG Ⅱ)

A. VALVE. ORFICE DATA

Ⅰ VALVES AUTOMATIC, REMOTE OPERABLE, OR EXCESS FLOW CHECK* AUTOMATIC OR MANUAL RESETTING. REMOTE POSITION INDICATION MINIMUM PRACTICAL SPACING FROM CONTAINMENT.

Ⅱ ORFICE/PIPE* SIZED TO LIMIT FLOW PER NRC REGULATORY GUIDE 1.11.

Ⅲ VALVE: LOCKED CLOSED. AUTOMATIC, OR Ⅱ ABOVE.

Ⅳ VALVE: SAME AS Ⅰ IF Ⅲ IS Ⅱ :OR LOCKED CLOSED AUTOMATIC (NON-CHECK)

Ⅴ VALVE-PROCESS SHUTOFF.

Ⅵ 6.4mm ORIFICE* LOCATED AS CLOSE AS PRACTICAL TO THE PROCESS TO PERMIT OPTIMUM VENTING OF NON-CONDENSIBLES.

*VALVES AND ORIFICES IN THE LINES SHOULD NOT BE SO RESTRICTIVE AS TO DIMINISH THE SAFETY FUNCTION OF THE LINE.

B. GROUP CLASSIFICATION OF SMALL DIAMETER LINES.

PROCESS SYSTEM TO WHICH ALL LINES ARE CONNECTED-GROUP CLASSIFICATION	GROUP CLASSIFICATION OF LINES UP TO AND THRU ROOT OR ISOLATION VALVES		CLASSIFICATION OF LINES BEYOND ROOT OR ISOLATION VALVES	
	LINES OVER 25A: WATER 50A: STEAM	LINES 25A: WATER 50A: STEAM AND SMALLER	SAFETY RELATED SYSTEMS (2)	NON-SAFETY RELATED SYSTEMS
A B C D	A B C(2) D(2)	B(1) B C(2) D(2)	B B C N/A	D D D D

(1) GROUP CLASSIFICATION AND CODE REQUIREMENTS ARE BASED ON CURRENT NRC GUIDELINES: HOWEVER, EACH PROJECT SHALL VERIFY WITH STATE JURISDICTIONAL AUTHORITIES TO AVOID MISUNDERSTANDINGS AND POSSIBLE RETROFITS.

(2) SAFETY RELATED SYSTEMS ARE THOSE SYSTEMS WHOSE ACTIONS ARE ESSENTIAL TO BOTH OF THE FOLLOWING:

A. AVOIDING THE UNACCEPTABLE RESULTS FOR ABNORMAL OPERATIONAL TRANSIENTS, ACCIDENTS, AND SPECIAL EVENTS BY CONTRIBUTING TO THE ACCOMPLISHMENT OF ESSENTIAL SAFETY ACTIONS.

B. SATISFYING THE SINGLE FAILURE CRITERION (WHERE APPLICABLE).

13. THE REACTOR COOLANT PRESSURE BOUNDARY INCLUDES THE REACTOR VESSEL AND CONNECTING PIPING, PUMPS AND VALVES, AND EXTENDS TO AND INCLUDES THE OUTERMOST PRIMARY CONTAINMENT ISOLATION VALVE(S) OF THE SYSTEM OR COMPONENT INDICATED.

14. THE CONTAINMENT IS DESIGNED AND CONSTRUCTED TO THE REQUIREMENTS OF THE ASME CODE FOR REINFORCED CONCRETE CONTAINMENT. COMPONENTS WHICH FROM AN EXTENSION OF CONTAINMENT ARE DEFINED AS PRESSURE-RETAINING COMPONENTS, PARTS, MATERIALS OR APPURTENANCES IN THE PORTION OF THE SYSTEM WHICH EXTENDS FROM THE CONTAINMENT TO AND INCLUDING THE OUTERMOST ISOLATION VALVE LOCATED OUTSIDE OF THE CONTAINMENT WHICH IS CAPABLE OF AUTOMATIC ACTUATION GROUP B.

FIG Ⅱ

INSTRUMENTATION SAMPLE. & OTHER SMALL LINES (SEE NOTE (2) TYPICAL

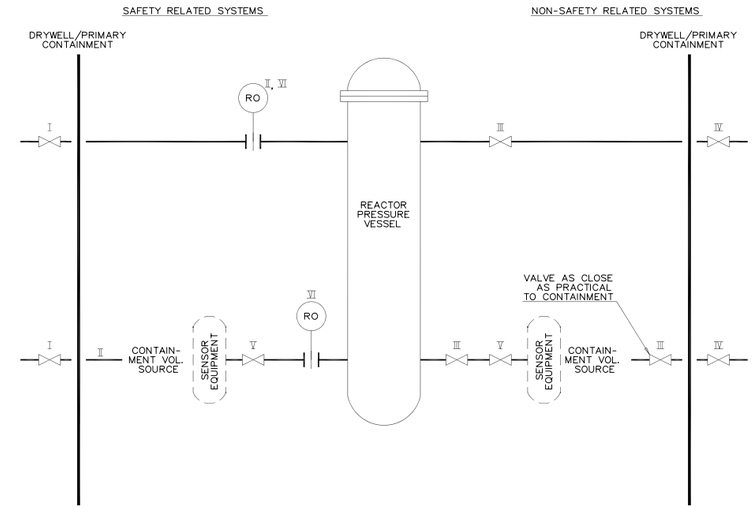

FIG Ⅲ

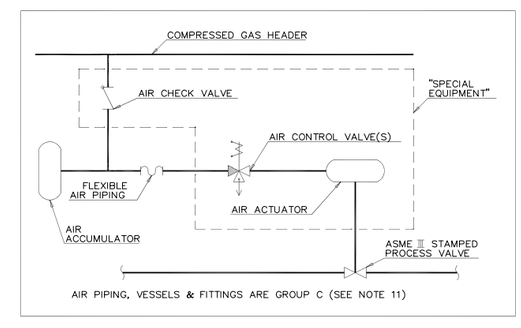

Figure 6.2-38 – Plant Requirements, Group Classification and Containment Isolation Diagram (Sheet 2 of 2)

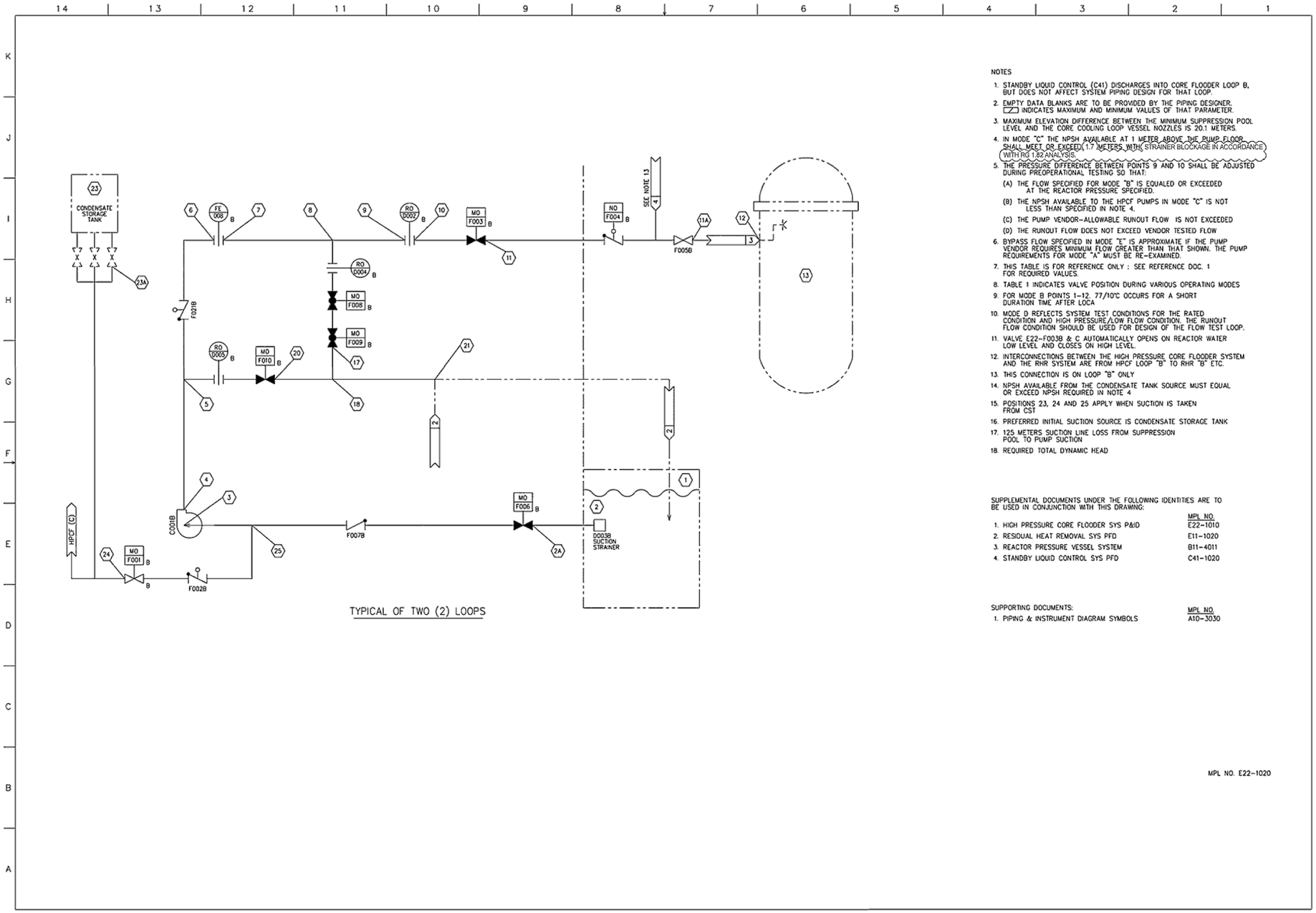

NOTES

1. STANDBY LIQUID CONTROL (C41) DISCHARGES INTO CORE FLOODER LOOP B, BUT DOES NOT AFFECT SYSTEM PIPING DESIGN FOR THAT LOOP.
2. EMPTY DATA BLANKS ARE TO BE PROVIDED BY THE PIPING DESIGNER. ▱ INDICATES MAXIMUM AND MINIMUM VALUES OF THAT PARAMETER.
3. MAXIMUM ELEVATION DIFFERENCE BETWEEN THE MINIMUM SUPPRESSION POOL LEVEL AND THE CORE COOLING LOOP VESSEL NOZZLES IS 20.1 METERS.
4. IN MODE "C" THE NPSH AVAILABLE AT 1 METER ABOVE THE PUMP FLOOR SHALL MEET OR EXCEED (1.7 METERS WITH STRAINER BLOCKAGE IN ACCORDANCE WITH RG 1.82 ANALYSIS.
5. THE PRESSURE DIFFERENCE BETWEEN POINTS 9 AND 10 SHALL BE ADJUSTED DURING PREOPERATIONAL TESTING SO THAT:
   (A) THE FLOW SPECIFIED FOR MODE "B" IS EQUALED OR EXCEEDED AT THE REACTOR PRESSURE SPECIFIED.
   (B) THE NPSH AVAILABLE TO THE HPCF PUMPS IN MODE "C" IS NOT LESS THAN SPECIFIED IN NOTE 4.
   (C) THE PUMP VENDOR-ALLOWABLE RUNOUT FLOW IS NOT EXCEEDED
   (D) THE RUNOUT FLOW DOES NOT EXCEED VENDOR TESTED FLOW
6. BYPASS FLOW SPECIFIED IN MODE "E" IS APPROXIMATE IF THE PUMP VENDOR REQUIRES MINIMUM FLOW GREATER THAN THAT SHOWN. THE PUMP REQUIREMENTS FOR MODE "A" MUST BE RE-EXAMINED.
7. THIS TABLE IS FOR REFERENCE ONLY : SEE REFERENCE DOC. 1 FOR REQUIRED VALUES.
8. TABLE 1 INDICATES VALVE POSITION DURING VARIOUS OPERATING MODES
9. FOR MODE B POINTS 1-12, 77/10°C OCCURS FOR A SHORT DURATION TIME AFTER LOCA
10. MODE D REFLECTS SYSTEM TEST CONDITIONS FOR THE RATED CONDITION AND HIGH PRESSURE/LOW FLOW CONDITION. THE RUNOUT FLOW CONDITION SHOULD BE USED FOR DESIGN OF THE FLOW TEST LOOP.
11. VALVE E22-F003B & C AUTOMATICALLY OPENS ON REACTOR WATER LOW LEVEL AND CLOSES ON HIGH LEVEL.
12. INTERCONNECTIONS BETWEEN THE HIGH PRESSURE CORE FLOODER SYSTEM AND THE RHR SYSTEM ARE FROM HPCF LOOP "B" TO RHR "B" ETC.
13. THIS CONNECTION IS ON LOOP "B" ONLY
14. NPSH AVAILABLE FROM THE CONDENSATE TANK SOURCE MUST EQUAL OR EXCEED NPSH REQUIRED IN NOTE 4
15. POSITIONS 23, 24 AND 25 APPLY WHEN SUCTION IS TAKEN FROM CST
16. PREFERRED INITIAL SUCTION SOURCE IS CONDENSATE STORAGE TANK
17. 125 METERS SUCTION LINE LOSS FROM SUPPRESSION POOL TO PUMP SUCTION
18. REQUIRED TOTAL DYNAMIC HEAD

SUPPLEMENTAL DOCUMENTS UNDER THE FOLLOWING IDENTITIES ARE TO BE USED IN CONJUNCTION WITH THIS DRAWING:

	MPL NO.
1. HIGH PRESSURE CORE FLOODER SYS P&ID	E22-1010
2. RESIDUAL HEAT REMOVAL SYS PFD	E11-1020
3. REACTOR PRESSURE VESSEL SYSTEM	B11-4011
4. STANDBY LIQUID CONTROL SYS PFD	C41-1020

SUPPORTING DOCUMENTS:

	MPL NO.
1. PIPING & INSTRUMENT DIAGRAM SYMBOLS	A10-3030

MPL NO. E22-1020

Figure 6.3-1 – High Pressure Core Flooder System PFD (Sheet 1 of 2)

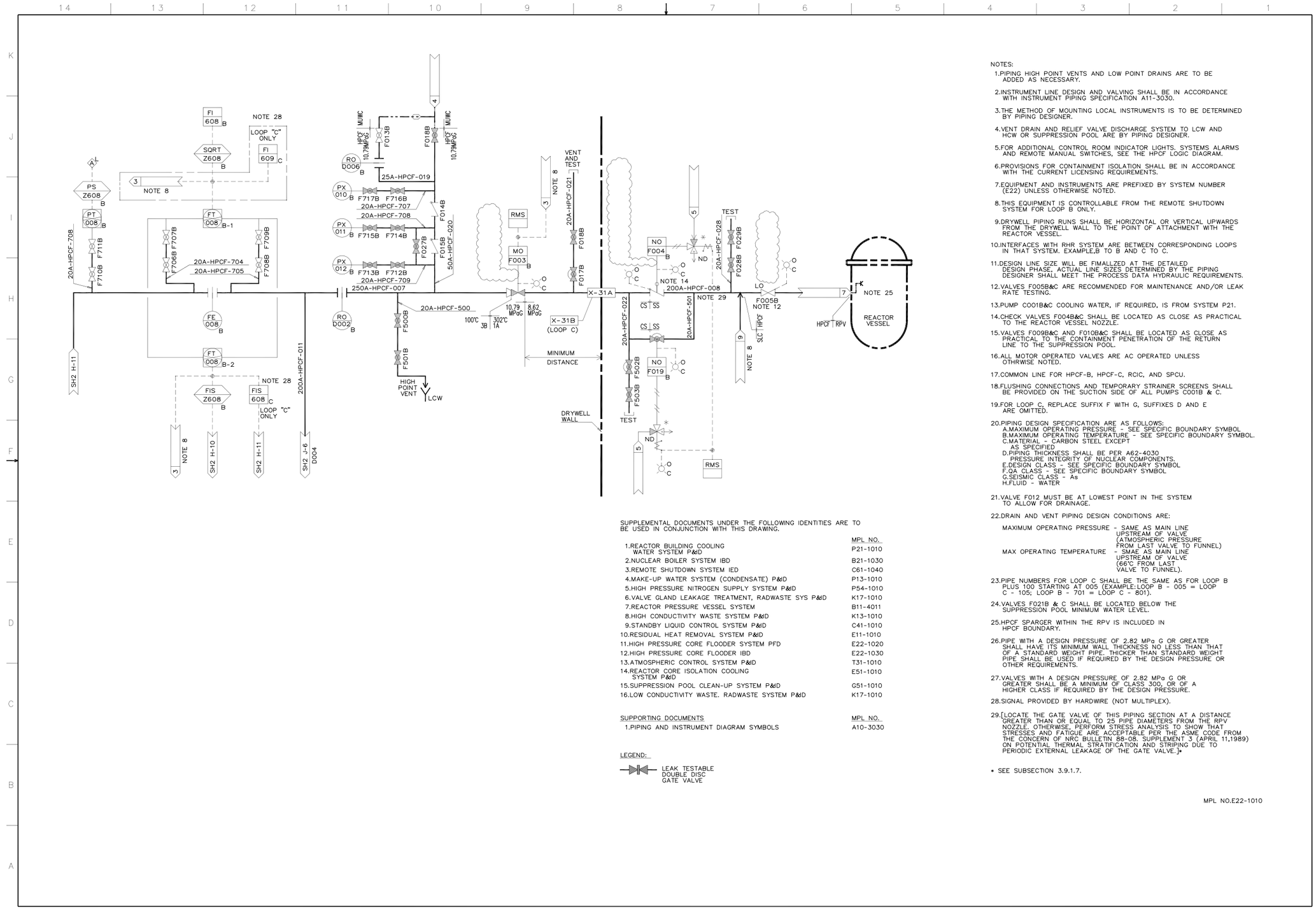

NOTES:

1. PIPING HIGH POINT VENTS AND LOW POINT DRAINS ARE TO BE ADDED AS NECESSARY.
2. INSTRUMENT LINE DESIGN AND VALVING SHALL BE IN ACCORDANCE WITH INSTRUMENT PIPING SPECIFICATION A11-3030.
3. THE METHOD OF MOUNTING LOCAL INSTRUMENTS IS TO BE DETERMINED BY PIPING DESIGNER.
4. VENT DRAIN AND RELIEF VALVE DISCHARGE SYSTEM TO LCW AND HCW OR SUPPRESSION POOL ARE BY PIPING DESIGNER.
5. FOR ADDITIONAL CONTROL ROOM INDICATOR LIGHTS. SYSTEMS ALARMS AND REMOTE MANUAL SWITCHES, SEE THE HPCF LOGIC DIAGRAM.
6. PROVISIONS FOR CONTAINMENT ISOLATION SHALL BE IN ACCORDANCE WITH THE CURRENT LICENSING REQUIREMENTS.
7. EQUIPMENT AND INSTRUMENTS ARE PREFIXED BY SYSTEM NUMBER (E22) UNLESS OTHERWISE NOTED.
8. THIS EQUIPMENT IS CONTROLLABLE FROM THE REMOTE SHUTDOWN SYSTEM FOR LOOP B ONLY.
9. DRYWELL PIPING RUNS SHALL BE HORIZONTAL OR VERTICAL UPWARDS FROM THE DRYWELL WALL TO THE POINT OF ATTACHMENT WITH THE REACTOR VESSEL.
10. INTERFACES WITH RHR SYSTEM ARE BETWEEN CORRESPONDING LOOPS IN THAT SYSTEM. EXAMPLE,B TO B AND C TO C.
11. DESIGN LINE SIZE WILL BE FIMALLZED AT THE DETAILED DESIGN PHASE, ACTUAL LINE SIZES DETERMINED BY THE PIPING DESIGNER SHALL MEET THE PROCESS DATA HYDRAULIC REQUIREMENTS.
12. VALVES F005B&C ARE RECOMMENDED FOR MAINTENANCE AND/OR LEAK RATE TESTING.
13. PUMP C001B&C COOLING WATER, IF REQUIRED, IS FROM SYSTEM P21.
14. CHECK VALVES F004B&C SHALL BE LOCATED AS CLOSE AS PRACTICAL TO THE REACTOR VESSEL NOZZLE.
15. VALVES F009B&C AND F010B&C SHALL BE LOCATED AS CLOSE AS PRACTICAL TO THE CONTAINMENT PENETRATION OF THE RETURN LINE TO THE SUPPRESSION POOL.
16. ALL MOTOR OPERATED VALVES ARE AC OPERATED UNLESS OTHRWISE NOTED.
17. COMMON LINE FOR HPCF-B, HPCF-C, RCIC, AND SPCU.
18. FLUSHING CONNECTIONS AND TEMPORARY STRAINER SCREENS SHALL BE PROVIDED ON THE SUCTION SIDE OF ALL PUMPS C001B & C.
19. FOR LOOP C, REPLACE SUFFIX F WITH G, SUFFIXES D AND E ARE OMITTED.
20. PIPING DESIGN SPECIFICATION ARE AS FOLLOWS:
    A. MAXIMUM OPERATING PRESSURE - SEE SPECIFIC BOUNDARY SYMBOL
    B. MAXIMUM OPERATING TEMPERATURE - SEE SPECIFIC BOUNDARY SYMBOL.
    C. MATERIAL - CARBON STEEL EXCEPT AS SPECIFIED
    D. PIPING THICKNESS SHALL BE PER A62-4030 PRESSURE INTEGRITY OF NUCLEAR COMPONENTS.
    E. DESIGN CLASS - SEE SPECIFIC BOUNDARY SYMBOL
    F. QA CLASS - SEE SPECIFIC BOUNDARY SYMBOL
    G. SEISMIC CLASS - As
    H. FLUID - WATER
21. VALVE F012 MUST BE AT LOWEST POINT IN THE SYSTEM TO ALLOW FOR DRAINAGE.
22. DRAIN AND VENT PIPING DESIGN CONDITIONS ARE:
    MAXIMUM OPERATING PRESSURE - SAME AS MAIN LINE UPSTREAM OF VALVE (ATMOSPHERIC PRESSURE FROM LAST VALVE TO FUNNEL)
    MAX OPERATING TEMPERATURE - SMAE AS MAIN LINE UPSTREAM OF VALVE (66°C FROM LAST VALVE TO FUNNEL).
23. PIPE NUMBERS FOR LOOP C SHALL BE THE SAME AS FOR LOOP B PLUS 100 STARTING AT 005 (EXAMPLE:LOOP B - 005 = LOOP C - 105; LOOP B - 701 = LOOP C - 801).
24. VALVES F021B & C SHALL BE LOCATED BELOW THE SUPPRESSION POOL MINIMUM WATER LEVEL.
25. HPCF SPARGER WITHIN THE RPV IS INCLUDED IN HPCF BOUNDARY.
26. PIPE WITH A DESIGN PRESSURE OF 2.82 MPa G OR GREATER SHALL HAVE ITS MINIMUM WALL THICKNESS NO LESS THAN THAT OF A STANDARD WEIGHT PIPE. THICKER THAN STANDARD WEIGHT PIPE SHALL BE USED IF REQUIRED BY THE DESIGN PRESSURE OR OTHER REQUIREMENTS.
27. VALVES WITH A DESIGN PRESSURE OF 2.82 MPa G OR GREATER SHALL BE A MINIMUM OF CLASS 300, OR OF A HIGHER CLASS IF REQUIRED BY THE DESIGN PRESSURE.
28. SIGNAL PROVIDED BY HARDWIRE (NOT MULTIPLEX).
29. [LOCATE THE GATE VALVE OF THIS PIPING SECTION AT A DISTANCE GREATER THAN OR EQUAL TO 25 PIPE DIAMETERS FROM THE RPV NOZZLE. OTHERWISE, PERFORM STRESS ANALYSIS TO SHOW THAT STRESSES AND FATIGUE ARE ACCEPTABLE PER THE ASME CODE FROM THE CONCERN OF NRC BULLETIN 88-08. SUPPLEMENT 3 (APRIL 11,1989) ON POTENTIAL THERMAL STRATIFICATION AND STRIPING DUE TO PERIODIC EXTERNAL LEAKAGE OF THE GATE VALVE.]*

* SEE SUBSECTION 3.9.1.7.

SUPPLEMENTAL DOCUMENTS UNDER THE FOLLOWING IDENTITIES ARE TO BE USED IN CONJUNCTION WITH THIS DRAWING.

	MPL NO.
1. REACTOR BUILDING COOLING WATER SYSTEM P&ID	P21-1010
2. NUCLEAR BOILER SYSTEM IBD	B21-1030
3. REMOTE SHUTDOWN SYSTEM IED	C61-1040
4. MAKE-UP WATER SYSTEM (CONDENSATE) P&ID	P13-1010
5. HIGH PRESSURE NITROGEN SUPPLY SYSTEM P&ID	P54-1010
6. VALVE GLAND LEAKAGE TREATMENT, RADWASTE SYS P&ID	K17-1010
7. REACTOR PRESSURE VESSEL SYSTEM	B11-4011
8. HIGH CONDUCTIVITY WASTE SYSTEM P&ID	K13-1010
9. STANDBY LIQUID CONTROL SYSTEM P&ID	C41-1010
10. RESIDUAL HEAT REMOVAL SYSTEM P&ID	E11-1010
11. HIGH PRESSURE CORE FLOODER SYSTEM PFD	E22-1020
12. HIGH PRESSURE CORE FLOODER IBD	E22-1030
13. ATMOSPHERIC CONTROL SYSTEM P&ID	T31-1010
14. REACTOR CORE ISOLATION COOLING SYSTEM P&ID	E51-1010
15. SUPPRESSION POOL CLEAN-UP SYSTEM P&ID	G51-1010
16. LOW CONDUCTIVITY WASTE. RADWASTE SYSTEM P&ID	K17-1010

SUPPORTING DOCUMENTS	MPL NO.
1. PIPING AND INSTRUMENT DIAGRAM SYMBOLS	A10-3030

LEGEND:

LEAK TESTABLE DOUBLE DISC GATE VALVE

MPL NO.E22-1010

Figure 6.3-7 – High Pressure Core Flooder System P&ID (SHEET 1 OF 2)

NOTES:

1. ALL REFERENCE DESIGNATIONS ARE PREFIXED WITH C71 UNLESS OTHERWISE SPECIFIED.
2. THE POSITION SWITCHES FOR MAIN STEAM LINE ISOLATION VALVE POSITION ARE A PART OF THE MSIVS. POSITION SWITCH CONTACTS SHALL OPEN BEFORE THE CLOSING VALVE REACHES THE 92% OPEN POSITION AND REMAIN OPEN WHEN THE VALVE IS FULLY CLOSED. THE SWITCH CONTACTS SHALL CLOSE BEFORE THE OPENING VALVE REACHES FULLY OPEN AND REMAIN CLOSED WHEN THE VALVE IS FULLY OPEN.
3. INTERNAL LOGIC AND EQUIPMENT FUNCTIONS ARE SHOWN ON THE REACTOR PROTECTION SYSTEM IBD. C71-1030.
4. THE APRM TRIP SIGNALS PROVIDED BY THE NEUTRON MONITORING SYSTEM (NMS) REPRESENT EITHER HIGH NEUTRON FLUX TRIP, HIGH SIMULATED THERMAL POWER TRIP, CORE FLOW RAPID COASTDOWN TRIP OR APRM INOPERATIVE AS DETERMINED BY THE NMS. THE SRNM TRIP SIGNALS PROVIDED BY THE NMS REPRESENT EITHER SRNM UPSCALE TRIP, SHORT PERIOD TRIP OR INOPERATIVE TRIP AS DETERMINED BY THE NMS.
5. LETTER DESIGNATIONS FOR EQUIPMENT IN THE FOUR RPS DIVISIONS ARE AS FOLLOWS:

   A - DIVISION I
   B - DIVISION II
   C - DIVISION III
   D - DIVISION IV

   THESE DESIGNATIONS DO NOT NECESSARILY APPLY TO MATCH CIRCLE LETTERS.
6. REDUNDANT LOGIC POWER SUPPLIES ARE TO BE PROVIDED WITHIN EACH INDIVIDUAL RTIS PANEL AND/OR WITHIN EACH MAJOR RTIS MODULE OR UNIT.
8. REACTOR PROTECTION SYSTEM LOGIC AND MAIN STEAM ISOLATION VALVE LOGIC (PART OF LEAK DETECTION AND ISOLATION SYSTEM) SHARE THE SAME DIGITAL TRIP RTIS AND TRIP LOGIC UNIT. SOFTWARE FUNCTIONS WRITTEN FOR EACH SYSTEM WILL SEPARATELY PROCESS SENSOR INPUT SIGNALS, TRIP DECISION LOGIC, AND INTERLOCK LOGIC RELATED TO A PARTICULAR SYSTEM. HOWEVER, FINAL DIVISION OUTPUT TRIP SIGNALS FOR THE TWO SYSTEMS SHALL BE DEVELOPED IN SEPARATE OUTPUT LOGIC UNITS IN EACH RTIS DIVISION LOGIC PANEL. SEE REF DOC 6.
9. TRIP INPUTS FOR THE TURBINE CONTROL VALVE FAST CLOSURE (TCVFC) TRIP SHALL BE DERIVED FROM ALL THOSE EVENTS CAUSING FAST CLOSURE OF THE TURBINE CONTROL VALVE. PROVISIONS SHALL BE MADE FOR THE PRESSURE SWITCHES TO DIRECTLY MEASURE INDIVIDUAL CONTROL VALVE "DISK DUMP" HYDRAULIC TRIP SYSTEM OIL PRESSURE AND FOR THE PRESSURE SWITCHES TO BE MOUNTED DIRECTLY ON THE TURBINE CONTROL VALVES.
10. ONE POSITION SWITCH EACH WITH TWO CONTACTS SHALL BE MOUNTED ON EACH TURBINE MAIN STOP VALVE (TSV). CONTACT NUMBER 1 OF EACH POSITION SWITCH SHALL PROVIDE TSV CLOSURE TRIP SIGNALS TO THE REACTOR PROTECTION SYSTEM. THESE CONTACTS SHALL BE CLOSED AND REMAIN CLOSED WHEN THE STOP VALVE IS FULLY OPEN. SHALL OPEN BEFORE THE CLOSING VALVE REACHES 90% OPEN, SHALL REMAIN OPEN WHILE THE VALVE IS FULLY CLOSED AND SHALL RECLOSE BEFORE THE OPENING VALVE IS FULLY OPEN. CONTACT NUMBER 2 OF EACH POSITION SWITCH SHALL PROVIDE MAIN CONDENSER VACUUM LOW TRIP BYPASS SIGNALS TO THE LEAK DETECTION SYSTEM. IN GENERAL, THE OPERATION OF THE NUMBER 2 SWITCH CONTACTS IS OPPOSITE TO THE OPERATION OF THE NUMBER 1 CONTACTS. SPECIFIC DETAILS OF THE OPERATION OF THE NUMBER 2 CONTACTS IS DESCRIBED IN THE LEAK DETECTION AND ISOLATION SYSTEM IED, REFERENCE DOCUMENT 6.
11. EACH OF THE FOUR TURBINE FIRST STAGE PRESSURE TRANSMITTERS SHALL BE CONNECTED TO A SEPARATE SENSING LINE AND SHALL BE SEPARATED FROM EACH OTHER BY SUITABLE DISTANCE OR BY BARRIERS TO MINIMIZE THE POTENTIAL FOR COMMON CAUSE FAILURE.
12. LOGIC POWER SOURCES FOR THE SCRAM FOLLOW SIGNALS AND SCRAM TEST SWITCH STATUS SIGNALS SHALL BE PROVIDED BY APPROPRIATE UNITS OF THE ROD CONTROL AND INFORMATION SYSTEM (C11).
13. THE REACTOR MODE SWITCH SHALL BE A SINGLE, FOUR POSITIONS, FOUR BANK, KEYLOCKED SWITCH. EACH OF THE FOUR BANKS SHALL BE ELECTRICALLY ISOLATED FROM ALL OTHER BANKS AND PROVIDE A REACTOR MODE SIGNAL TO ONE OF THE FOUR RPS DIVISIONS. WHEN THE SWITCH IS IN ONE POSITION, THE CONTACTS ASSOCIATED WITH THAT POSITION SHALL BE CLOSED AND THE CONTACTS FOR ALL OTHER POSITIONS SHALL BE OPEN. CONTACT ACTION UPON SWITCHING SHALL BE MAKE BEFORE BREAK. THE DIVISION I AND DIVISION II BANKS SHALL EACH HAVE AN ADDITIONAL CONTACT ASSOCIATED WITH THE "SHUTDOWN" POSITION. THESE CONTACTS SHALL BE OPEN WHEN THE MODE SWITCH IS IN THE "SHUTDOWN" POSITION AND SHALL BE CLOSED IN ALL OTHER POSITIONS.
14. THE MANUAL SCRAM RESET SWITCH SHALL BE A SINGLE, THREE POSITION, TWO BANK, SPRING RETURN TO NEUTRAL SWITCH. THE TWO BANKS SHALL BE ISOLATED FROM EACH OTHER. WHEN THE SWITCH IS IN ONE OF THE TWO NON-NEUTRAL POSITIONS, THE ASSOCIATED CONTACTS SHALL BE CLOSED. WHEN THE SWITCH IS IN THE NEUTRAL POSITION, ALL CONTACTS SHALL BE OPEN.
15. GROUPS 1A, 1B, 2A, 2B, 3A, 3B, 4A AND 4B SOLENOID POWER WIRING SHALL ALL BE RUN IN SEPARATE CONDUIT. INTERCONNECTIONS BETWEEN PDLU, OLU AND SCC ARE SHOWN IN LOGIC DIAGRAM REPRESENTATION IN SUPPORTING DOC 5.
16. RPS ALARMS AND STATUS SIGNALS ARE DESCRIBED IN SUPPORTING DOCUMENTS 1,5 AND 6.
17. THE NEUTRAL WIRING OF ALL FOUR SCRAM GROUPS SHALL BE CONNECTED TO THE SAME COMMON POINT GROUND.
18. WITHIN THE SCRAM SOLENOID FUSE PANELS, CURRENT SURGE SUPPRESSION DEVICES (E.G. VARISTORS OR EQUIVALENT) SHALL BE CONNECTED ACROSS THE COIL LEADS OF EACH HCU SCRAM PILOT VALVE SOLENOID.
19. FIBER OPTIC CABLES PROVIDING ELECTRICAL SEPARATION BETWEEN EQUIPMENT OF REDUNDANT DIVISIONS SHALL BE RUN IN EITHER THE SENDING OR IN THE RECEIVING DIVISION CABLE TRAYS.
20. THE WIRING CIRCUITS ASSOCIATED WITH THE DIV II AND THE DIV III MODE SWITCH IN "SHUTDOWN" SCRAM SIGNALS SHALL BE RUN SEPARATELY AND BE KEPT SEPARATE BY DISTANCE OR BARRIERS FROM THE WIRING CIRCUITS ASSOCIATED WITH THE DIVISION II MANUAL SCRAM AND THE DIVISION III MANUAL SCRAM SIGNALS SUCH AS TO PREVENT A SINGLE FAULT FROM CAUSING THE LOSS OF BOTH MANUAL SCRAM FUNCTIONS.
21. PLACING ANY ONE OF THE HCU (PAIR-ROD) TEST SWITCHES INTO THE "TEST" POSITION SHALL RESULT IN ISOLATED SIGNALS BEING SENT TO THE RCIMS (REFERNCE DOCUMENT 2) SUCH AS TO PROVIDE TIMING SIGNALS INDICATING THE START OF A ROD SCRAM TEST.
22. METAL ENCLOSED JUNCTION BOXES AND CONDUIT SHALL BE UTILIZED WITHIN THE SCRAM TEST PANEL TO MAINTAIN SEPARATION OF ALL FOUR SCRAM GROUPS AND PROTECTION FROM HOT SHORTS.
23. THE SUPPRESSION POOL TEMPERATURE MONITORING (SPTM) TRIP SIGNALS REPRESENT EITHER SUPPRESSION POOL HIGH BULK TEMPERATURE OR SPTM INOPERATIVE AS DETERMINED BY THE SUPPRESSION POOL TEMPERATURE MONITORING SYSTEM.

REFERENCES	MPL ITEM NO.
1. NUCLEAR BOILER SYSTEM (NBS) P&ID	B21-1010
2. ROD CONTROL AND INFORMATION SYSTEM (RCIS) IED	C11-1040
3. CONTROL ROD DRIVE SYSTEM (CRD) P&ID	C12-1010
4. NEUTRON MONITORING SYSTEM (NMS) IED	C51-1040
5. PROCESS RADIATION MONITORING SYSTEM (PRRM) IED	D11-1040
6. LEAK DETECTION AND ISOLATION SYSTEM (LDS) IED	E31-1040
7. D.C. POWER ONE LINE DIAGRAM	R42-1010
8. VITAL AC POWER ONE LINE DIAGRAM	R46-1010
9. RECIRCULATION FLOW CONTROL SYSTEM (RFCS) IED	C81-1040
10. SUPPRESSION POOL TEMPERATURE MONITORING (SPTM) SYSTEM IED	T53-1010

SUPPORTING DOCUMENT	MPL ITEM NO.
1. REACTOR PROTECTION SYSTEM DESIGN SPEC	C71-4010
2. DESIGN DOCUMENTS STANDARDS	A10-3020
3. PIPING & INSTRUMENT DIAGRAM SYMBOLS	A10-3020
4. IBD STANDARDS	A10-3070
5. REACTOR PROTECTION SYSTEM IBD	C71-1030
6. REACTOR PROTECTION SYSTEM MMIR	C71-5030

LEGENDS:

- ----- SINGLE SIGNAL OR POWER CONNECTION
- n MULTIPLE (PARALLEL) SIGNAL OR POWER CONNECTION
- DATA CONNECTION
- LINE CONNECTION
- SOLENOID POWER WIRING WITHIN GROUNDED STEEL CONDUIT

ABBREVIATIONS

APRM - AVERAGE POWER RANGE MONITOR
BPU - BYPASS UNITS
CRD - CONTROL ROD DRIVE
DIV 1 - ELECTRICAL DIVISION I
DIV 2 - ELECTRICAL DIVISION II
DIV 3 - ELECTRICAL DIVISION III
DIV 4 - ELECTRICAL DIVISION IV
DTF - DIGITAL TRIP FUNCTION
FO - FIBER OPTIC
HCU - HYDRAULIC CONTROL UNIT
L - LINE
MSIV - MAIN STEAM LINE ISOLATION VALVE
N - NEUTRAL
MSL - MAIN STEAM LINE
OLU - OUTPUT LOGIC UNIT
PDLU - POWER DISTRIBUTION LOGIC UNIT
RTIS - REACTOR TRIP AND ISOLATION SYSTEM
SCC - SOLENOID CONTROL CENTER
SRNM - SOURCE RANGE NEUTRON MONITOR
SSFP - SCRAM SOLENOID FUSE PANEL
TLF - TRIP LOGIC FUNCTION
KOS - KEYLOCK OPERATION SWITCH

MPL NO. C71-1040

Figure 7.2-9 – Reactor Protection System IED (Sheet 1 of 11)

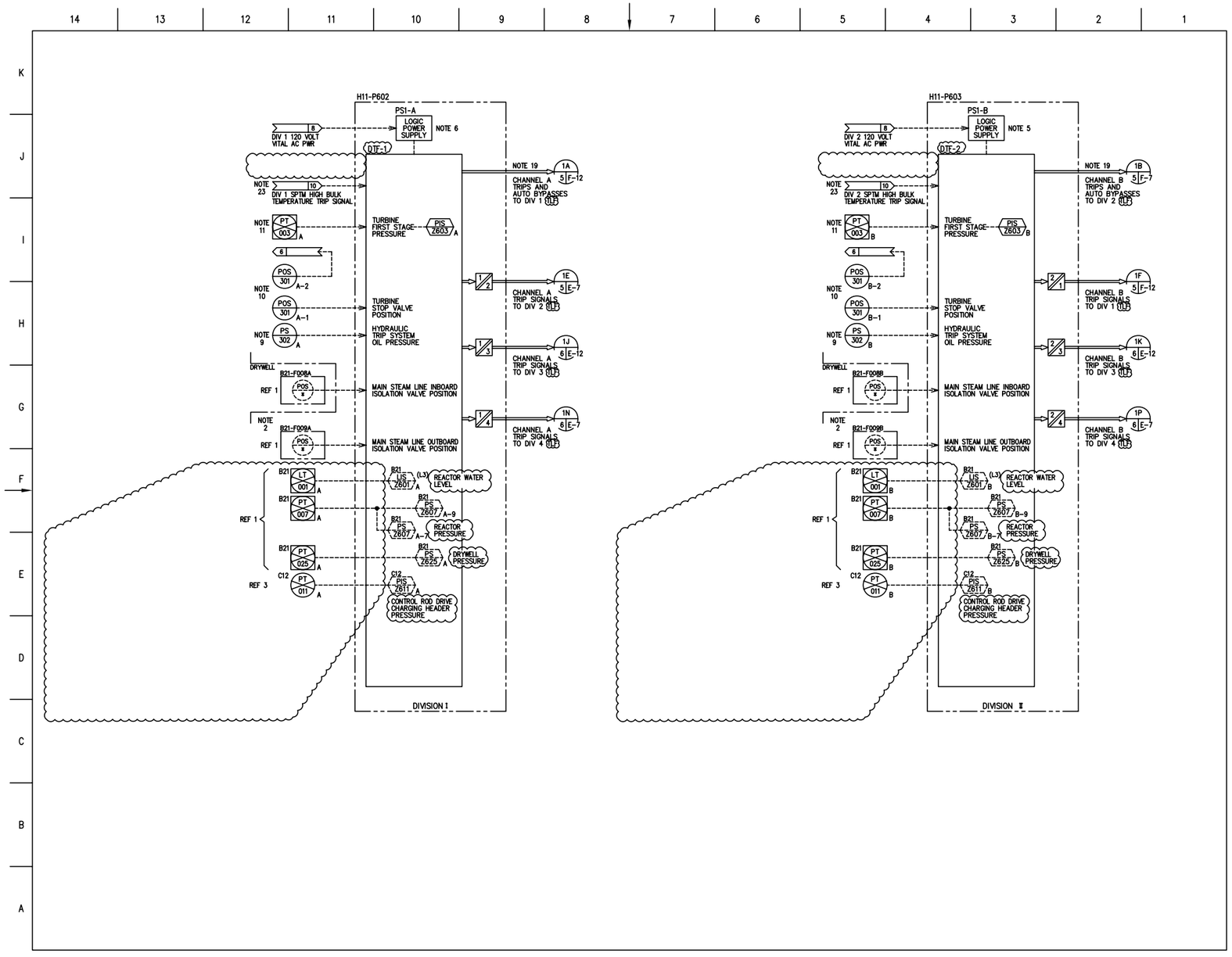

Figure 7.2-9 – Reactor Protection System IED (Sheet 2 of 11)

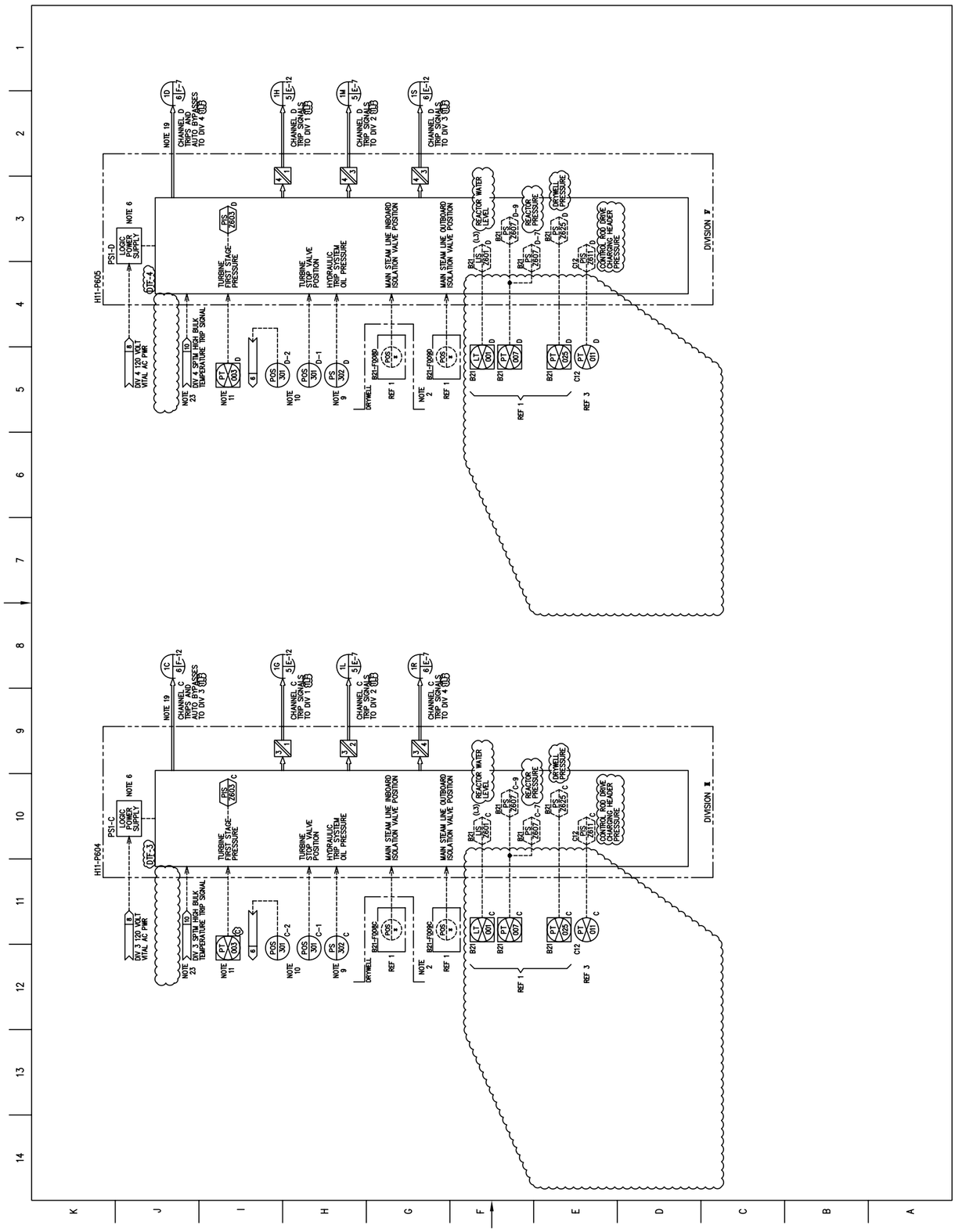

Figure 7.2-9 – Reactor Protection System IED (Sheet 3 of 11)

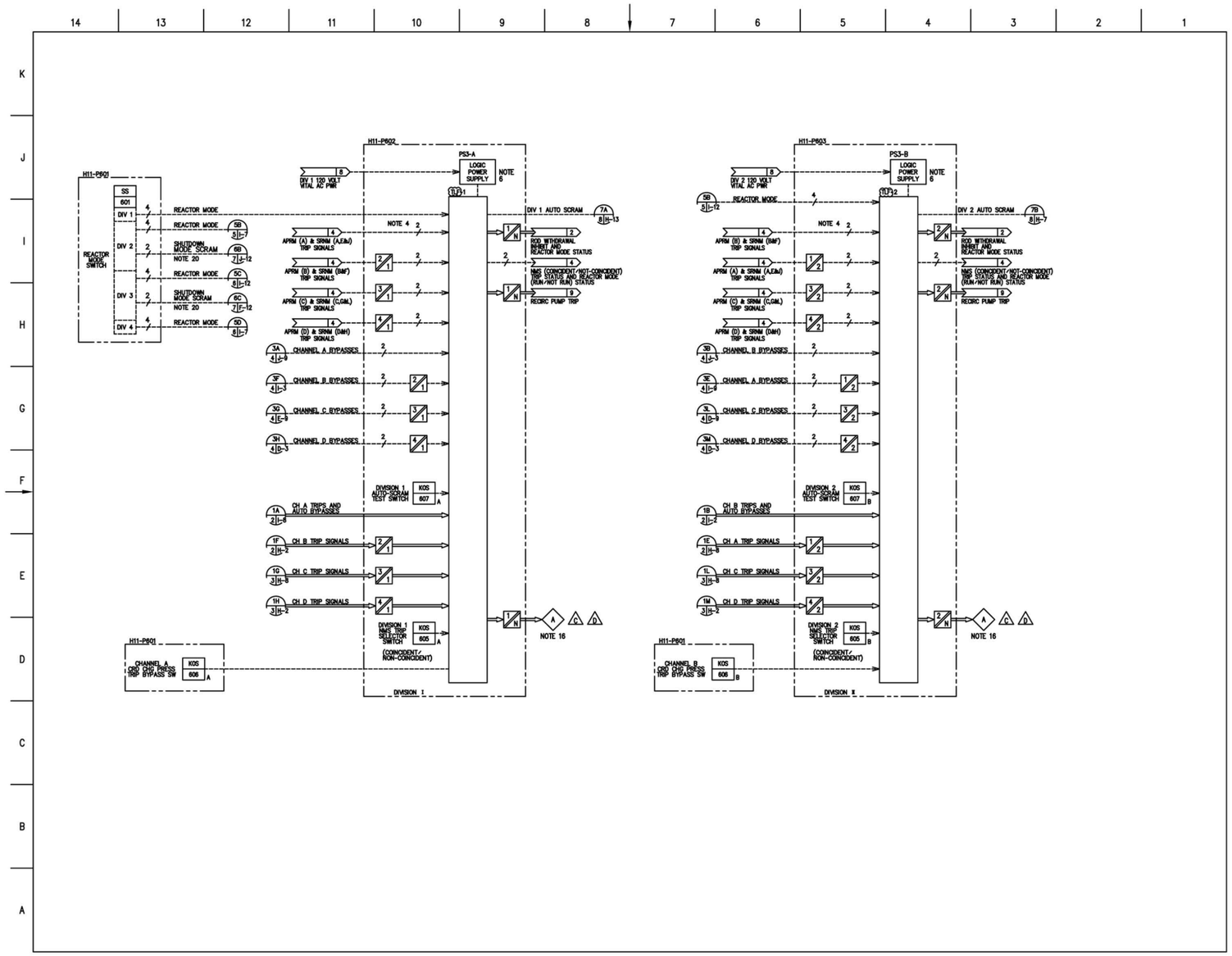

Figure 7.2-9 – Reactor Protection System IED (Sheet 5 of 11)

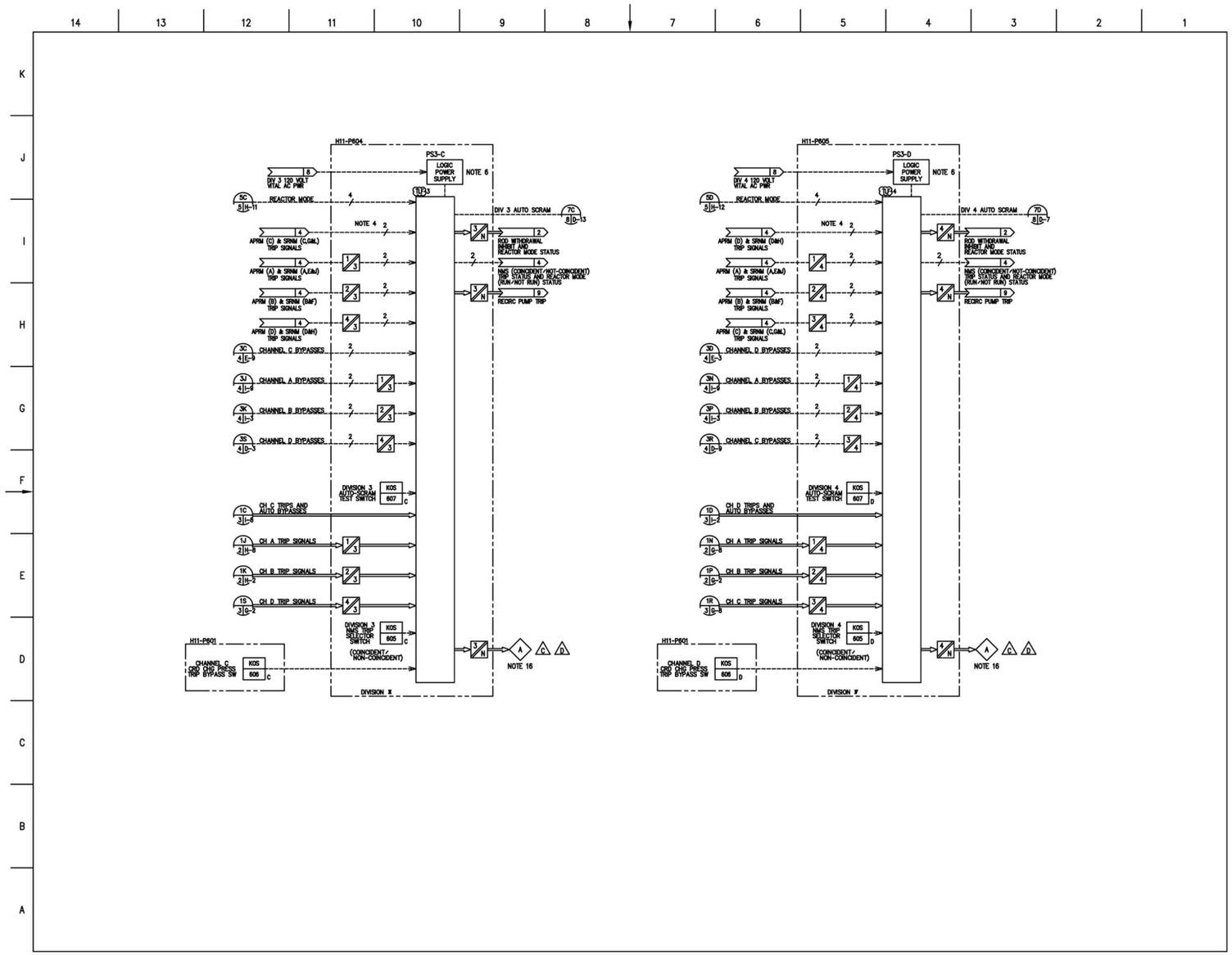

Figure 7.2-9 – Reactor Protection System IED (Sheet 6 of 11)