3.0 LIMITING CONDITION FOR OPERATION (LCO) APPLICABILITY

The information in this section of the reference ABWR DCD, including all subsections, is incorporated by reference with the following departure.

STP DEP 16.3-1

LCO 3.0.6 *When a supported system LCO is not met solely due to a support system LCO not being met, the Conditions and Required Actions associated with this supported system are not required to be entered. Only the support system LCO ACTIONS are required to be entered. This is an exception to LCO 3.0.2 for the supported system. In this event, additional evaluations and limitations may be required in accordance with Specification ~~5.8~~5.6, "Safety Function Determination Program (SFDP)." If a loss of safety function is determined to exist by this program, the appropriate Conditions and Required Actions of the LCO in which the loss of safety function exists are required to be entered.*

3.0 SURVEILLANCE REQUIREMENT (SR) APPLICABILITY

The information in this section of the reference ABWR DCD, including all subsections, is incorporated by reference with no departures or supplements.

3.1 REACTIVITY CONTROL SYSTEMS

3.1.1 SHUTDOWN MARGIN (SDM)

The information in this section of the reference ABWR DCD, including all subsections, is incorporated by reference with no departures or supplements.

[This page intentionally left blank]

3.1 REACTIVITY CONTROL SYSTEMS

3.1.2 Reactivity Anomalies

The information in this section of the reference ABWR DCD, including all subsections, is incorporated by reference with no departures or supplements.

[This page intentionally left blank]

3.1 REACTIVITY CONTROL SYSTEMS

3.1.3 Control Rod OPERABILITY

The information in this section of the reference ABWR DCD, including all subsections, is incorporated by reference with no departures and the following site-specific supplement. This site-specific supplement partially addresses COL License Information Item 16.1.

Surveillance Requirements

SURVEILLANCE		*FREQUENCY*
SR 3.1.3.4	*Verify each control rod scram time from fully withdrawn to 60% rod insertion position is ≤ [1.44] seconds.*	*In accordance with SR 3.1.4.1, SR 3.1.4.2, SR 3.1.4.3, and SR 3.1.4.4*

[This page intentionally left blank]

3.1 REACTIVITY CONTROL SYSTEMS

3.1.4 Control Rod Scram Times

The information in this section of the reference ABWR DCD, including all subsections, is incorporated by reference with no departures and the following site-specific supplements. These site-specific supplements partially address COL License Information Item 16.1.

LCO 3.1.4

a. No more than [8] OPERABLE control rods shall be "slow," in accordance with Table 3.1.4-1; and

b. No more than 2 OPERABLE control rods that are "slow" shall occupy adjacent locations.

APPLICABILITY: *MODES 1 and 2.*

ACTIONS

CONDITION	*REQUIRED ACTION*	*COMPLETION TIME*
A. Requirements of the LCO not met.	*A.1 Be in MODE 3.*	*12 hours*

SURVEILLANCE REQUIREMENTS

----------NOTE----------
During single or pair control rod scram time Surveillances, the control rod drive (CRD) pumps shall be isolated from the associated scram accumulator.

SURVEILLANCE		*FREQUENCY*
SR 3.1.4.1	*Verify each control rod scram time is within the limits of Table 3.1.4-1 with reactor steam dome pressure ≥ 6.55 MPaG.*	*Prior to exceeding 40% RTP after fuel movement within the reactor pressure vessel* *AND* (continued)

Table 3.1.4-1
Control Rod Scram Times

----------NOTES----------

1. *OPERABLE control rods with scram times not within the limits of this Table are considered "slow."*

2. *Enter applicable Conditions and Required Actions of LCO 3.1.3, "Control Rod Operability," for control rods with scram times > [1.44] seconds to 60% rod insertion position. These control rods are inoperable, in accordance with SR 3.1.3.4, and are not considered "slow."*

	SCRAM TIMES[a] (seconds)		
ROD POSITION PERCENT INSERTION (%)	REACTOR STEAM DOME PRESSURE[b] 0 MPaG	REACTOR STEAM DOME PRESSURE[b] 6.55 MPaG	REACTOR STEAM DOME PRESSURE[b] 7.24 MPaG
10	(c)	[0.42]	[0.42]
40	(c)	[1.00]	[1.00]
60		[1.44]	[1.44]

a. *Maximum scram time from fully withdrawn position, based on de-energization of scram pilot valve solenoids as time zero.*

b, *For intermediate reactor steam dome pressures, the scram time criteria are determined by linear interpolation.*

c. *For reactor steam dome pressure ≤ 6.55 MPaG, only 60% rod insertion position scram time limit applies.*

3.1 REACTIVITY CONTROL SYSTEMS

3.1.5 Control Rod Scram Accumulators

The information in this section of the reference ABWR DCD, including all subsections, is incorporated by reference with no departures or supplements.

[This page intentionally left blank]

3.1 REACTIVITY CONTROL SYSTEMS

3.1.6 Rod Pattern Control

The information in this section of the reference ABWR DCD, including all subsections, is incorporated by reference with no departures or supplements.

[This page intentionally left blank]

3.1 REACTIVITY CONTROL SYSTEMS

3.1.7 Standby Liquid Control (SLC) System

The information in this section of the reference ABWR DCD, including all subsections, is incorporated by reference with no departures, but the following site-specific supplement. The site specific supplement partially addresses COL License Information Item 16.1.

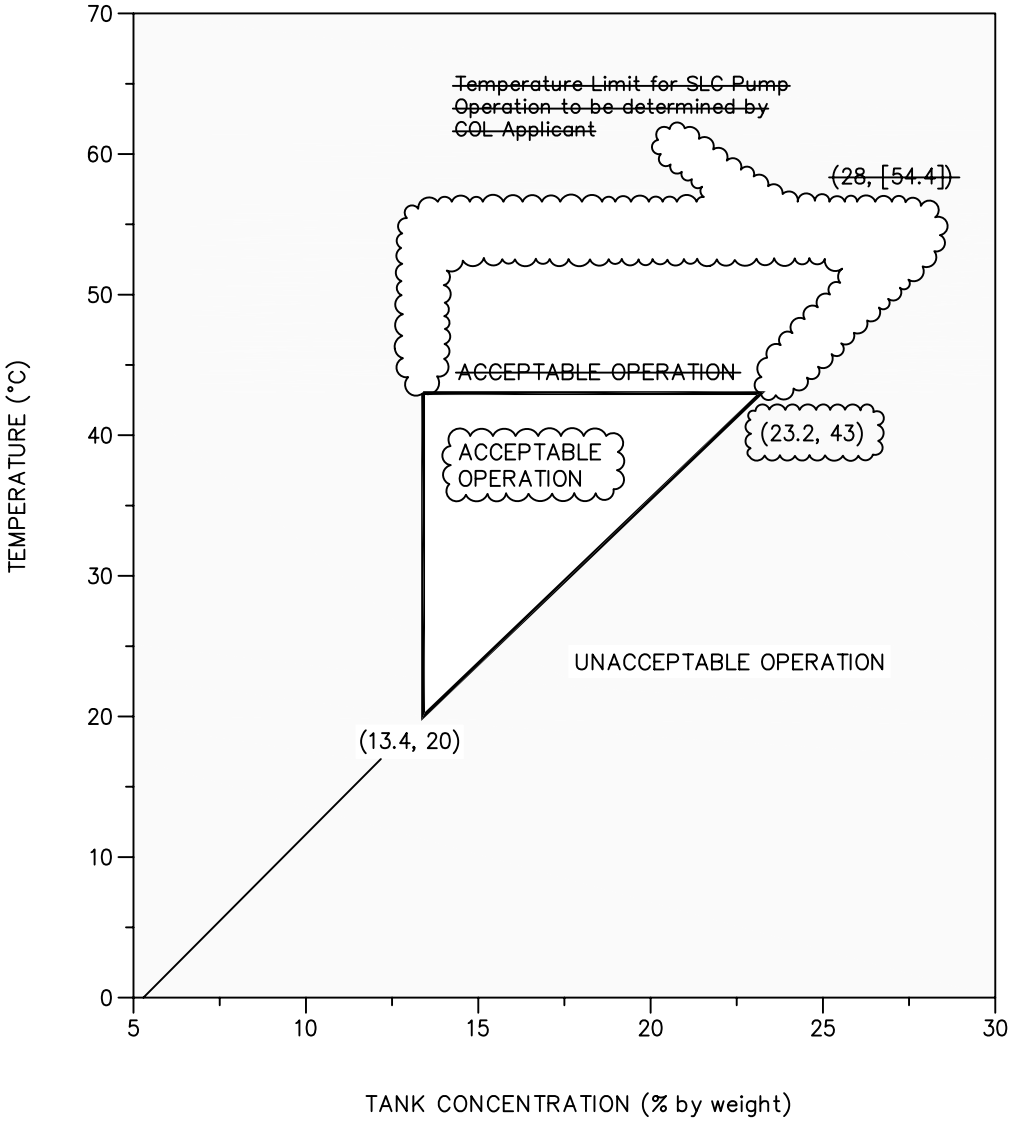

Figure 3.1.7-1 (Page 1 of 1)
Sodium Pentaborate Solution Temperature / Concentration Requirements

3.2 POWER DISTRIBUTION LIMITS

3.2.1 AVERAGE PLANAR LINEAR HEAT GENERATION RATE (APLHGR)

The information in this section of the reference ABWR DCD, including all subsections, is incorporated by reference with no departures or supplements.

[This page intentionally left blank]

3.2 POWER DISTRIBUTION LIMITS

3.2.2 MINIMUM CRITICAL POWER RATIO (MCPR)

The information in this section of the reference ABWR DCD, including all subsections, is incorporated by reference with no departures or supplements.

[This page intentionally left blank]

3.2 POWER DISTRIBUTION LIMITS

3.2.3 LINEAR HEAT GENERATION RATE (LHGR) (Non-GE Fuel)

The information in this section of the reference ABWR DCD, including all subsections, is being deleted in accordance with the following departure.

STD DEP 16.3-95

Not Used.

[This page intentionally left blank]

3.3 INSTRUMENTATION

3.3.1.1 Safety System Logic and Control (SSLC) Sensor Instrumentation

The information in this section of the reference ABWR DCD, including all subsections, is incorporated by reference with the following departures and site-specific supplements. The site specific supplements partially address COL License Information Item 16.1.

STD DEP T1 2.3-1
STD DEP T1 2.4-2
STD DEP 16.3-84
STD DEP 16.3-98
STD DEP 16.3-99
STD DEP 16.3-100

ACTIONS (continued)

CONDITION	*REQUIRED ACTION*	*COMPLETION TIME*
A. Continued	*A.2.2.1 Restore required channel to OPERABLE status.* *OR* *A.2.2.2* ----------*NOTE*---------- *1. Remove division of sensors bypass or NMS channel bypass after placing channel in trip.* *2. Division of sensor bypass or NMS bypass is allowed for [6] hours for restoring channel to OPERABLE status.* *3. SENSOR CHANNEL(s) may be considered to remain in a tripped condition when a division containing tripped channel(s) is placed in division of sensors bypass due to subsequent entries into this condition.* ---------- *Place channel in trip*	*30 days*

SURVEILLANCE REQUIREMENTS

----------NOTE----------
Refer to Table 3.3.1.1-1 to determine which SRs apply for each SSLC Sensor Instrumentation Function
---

	SURVEILLANCE	*FREQUENCY*
SR 3.3.1.1.1	*Perform SENSOR CHANNEL CHECK.*	*12 hours*
SR 3.3.1.1.2	*----------NOTE----------* *Only required to be met with THERMAL POWER ≥ 25% RTP.* *----------* *Verify the absolute difference between the average power range monitor (APRM) channels and the calculated power is ≤ 2% RTP*	*~~[7]~~ days*
STD DEP 16.3-100 *SR 3.3.1.1.3*	*----------NOTE----------* *Not required to be performed when entering MODE 2 from MODE 1 until 12 hours after entering MODE 2.* *----------* *Perform DIVISION FUNCTIONAL TEST* in accordance with TS 5.5.2.11, Setpoint Control Program.	*~~[7]~~ days*
STD DEP 16.3-100 *SR 3.3.1.1.4*	*Perform DIVISION FUNCTIONAL TEST* in accordance with TS 5.5.2.11, Setpoint Control Program.	*~~[32~~ 31~~]~~ days*
STD DEP 16.3-100 *SR 3.3.1.1.5*	*Perform DIVISION FUNCTIONAL TEST* in accordance with TS 5.5.2.11, Setpoint Control Program.	*~~[92~~ 31~~]~~ days*

	SURVEILLANCE	FREQUENCY
STD DEP 16.3-100		
SR 3.3.1.1.6	*Perform CHANNEL FUNCTIONAL TEST* in accordance with TS 5.5.2.11, Setpoint Control Program.	*~~[92~~ 31~~]~~ days*
SR 3.3.1.1.7	*Calibrate the local power range monitors.*	*1000 MW·d/t average core exposure*
SR 3.3.1.1.8	*----------NOTE----------* *1. Required to be met with THERMAL POWER ≤ 5% RTP prior to entry into MODE 1 from MODE 2.* *2. Required to be met prior to entry into MODE 2 from MODE 1.* *----------* *Verify the SRNM and APRM channels overlap within at least 1/2 decade.*	*~~[7]~~ days*
SR 3.3.1.1.9	*----------NOTE----------* *Radiation and Neutron detectors are excluded.* *----------* *Perform COMPREHENSIVE FUNCTIONAL TEST.*	*18 months*

	SURVEILLANCE	*FREQUENCY*
STD DEP 16.3-100		
SR 3.3.1.1.10	*----------NOTE----------* *1. Neutron detectors are excluded.* *2. SENSOR CHANNEL CALIBRATION shall include calibration of all parameters used to calculate setpoints (e.g. recirculation flow for TPM setpoint) and all parameters used for trip function bypasses (e.g. Turbine first stage pressure for TSV closure bypass).* *----------* *Perform SENSOR CHANNEL CALIBRATION* in accordance with TS 5.5.2.11, Setpoint Control Program.	*18 months*
STD DEP 16.3-100		
SR 3.3.1.1.11	*Perform CHANNEL CALIBRATION* in accordance with TS 5.5.2.11, Setpoint Control Program.	18 months

Table 3.3.1.1-1 (Page 1 of 7)
SSLC Sensor Instrumentation

FUNCTION	APPLICABLE MODES OR OTHER SPECIFIED CONDITIONS	REQUIRED CHANNELS	CONDITIONS REFERENCED FROM REQUIRED ACTIONS	SURVEILLANCE REQUIREMENTS	STD DEP16.3-100 ~~ALLOWABLE VALUE~~
1. Startup Range Neutron Monitors					
1a. SRNM Neutron Flux– High	2	4	H	SR 3.3.1.1.1 SR 3.3.1.1.3 SR 3.3.1.1.8 SR 3.3.1.1.9 SR 3.3.1.1.10	~~≤ [(i)] % RTP~~
	5[a]	4	I	SR 3.3.1.1.1 SR 3.3.1.1.4 SR 3.3.1.1.9 SR 3.3.1.1.10	~~≤ [(i)] % RTP~~
1b. SRNM Neutron Flux – Short Period	2[b]	4	H	SR 3.3.1.1.1 SR 3.3.1.1.3 SR 3.3.1.1.8 SR 3.3.1.1.10	~~≤ [(i)] Seconds~~
	5[a][b]	4	I	SR 3.3.1.1.1 SR 3.3.1.1.4 SR 3.3.1.1.9 SR 3.3.1.1.10	~~≤ [(i)] Seconds~~
1c. SRNM ATWS Permissive	1, 2	4	H	SR 3.3.1.1.5 SR 3.3.1.1.9 SR 3.3.1.1.10	~~≤ [(i)] RTP for ≥ [(i)] min~~
1d. SRNM - Inop	1,2	4	H	SR 3.3.1.1.3	~~NA~~
	5[a]	4	I	SR 3.3.1.1.4 SR 3.3.1.1.9	
2. Average Power Range Monitors					
2a. APRM Neutron Flux – High, Setdown	2	4	H	SR 3.3.1.1.1 SR 3.3.1.1.3 SR 3.3.1.1.7 SR 3.3.1.1.8 SR 3.3.1.1.10	~~≤ [(i)] % RTP~~
2b. APRM Simulated Thermal Power–High, Flow Biased	1	4	G	SR 3.3.1.1.1 SR 3.3.1.1.2 SR 3.3.1.1.5 SR 3.3.1.1.7 SR 3.3.1.1.9 SR 3.3.1.1.10 SR 3.3.1.1.12	~~≤ [W+ (i)] % RTP and ≤ [(i)] % RTP~~
2c. APRM Fixed Neutron Flux – High	1	4	G	SR 3.3.1.1.1 SR 3.3.1.1.2 SR 3.3.1.1.5 SR 3.3.1.1.7 SR 3.3.1.1.9 SR 3.3.1.1.10 SR 3.3.1.1.12	~~[(i)] % RTP~~
2d. APRM - Inop	1,2	4	H	SR 3.3.1.1.5 SR 3.3.1.1.7	~~NA~~

(continued)

Table 3.3.1.1-1 (Page 2 of 7)
SSLC Sensor Instrumentation

	FUNCTION	APPLICABLE MODES OR OTHER SPECIFIED CONDITIONS	REQUIRED CHANNELS	CONDITIONS REFERENCED FROM REQUIRED ACTIONS	SURVEILLANCE REQUIREMENTS	STD DEP16.3-100 ~~ALLOWABLE VALUE~~
	2e. Rapid Core Flow Decrease	≥ 75 % RTP	4	F	SR 3.3.1.1.1 SR 3.3.1.1.5 SR 3.3.1.1.9 SR 3.3.1.1.10 SR 3.3.1.1.12	~~≥ [(i)] %/s~~
	2f. Oscillation Power Range Monitor.	Per Figure 3.3.1.1-1	4	J	SR 3.3.1.1.1 SR 3.3.1.1.5 SR 3.3.1.1.9 SR 3.3.1.1.10 SR 3.3.1.1.12	~~See footnote (c)~~
	2g. APRM ATWS ADS Permissive	1, 2	4	H	SR 3.3.1.1.5 SR 3.3.1.1.9 SR 3.3.1.1.10	~~≤ [(i)] RTP for ≥ [(i)] min~~
3.	Reactor Vessel Steam Dome Pressure – High					
	3a. RPS Trip Initiation	1, 2	4	H	SR 3.3.1.1.1 SR 3.3.1.1.5 SR 3.3.1.1.9 SR 3.3.1.1.10 SR 3.3.1.1.12	~~≤ [(i)] MPaG~~
	3b. Isolation Initiation	1, 2, 3	4	K	SR 3.3.1.1.1 SR 3.3.1.1.5 SR 3.3.1.1.9 SR 3.3.1.1.10 SR 3.3.1.1.14	~~≤ [(i)] MPaG~~
	STD DEP 16.3-84					
	3c. SLCS and FWRB Initiation	1,2	4	~~G~~ H	SR 3.3.1.1.1 SR 3.3.1.1.6 SR 3.3.1.1.11	~~≤ [(i)] MPaG~~
4.	Reactor Steam Dome Pressure- Low (Injection Permissive)	1, 2, 3	4	N	SR 3.3.1.1.1 SR 3.3.1.1.5 SR 3.3.1.1.9 SR 3.3.1.1.10 SR 3.3.1.1.13	~~≤ [(i)] MPaG~~
5.	Reactor Vessel Water Level– High, Level 8	1, 2, 3 4[(e)], 5[(e)]	4	N	SR 3.3.1.1.1 SR 3.3.1.1.5 SR 3.3.1.1.9 SR 3.3.1.1.10	~~≤ [(i)] cm~~
6.	Reactor Vessel Water Level– Low, Level 3					
	6a. RPS Trip Initiation.	1, 2	4	H	SR 3.3.1.1.1 SR 3.3.1.1.5 SR 3.3.1.1.9 SR 3.3.1.1.10 SR 3.3.1.1.12	~~≥ [(i)] cm~~
	6b. Isolation Initiation.	1, 2, 3	4	K	SR 3.3.1.1.1 SR 3.3.1.1.5 SR 3.3.1.1.9 SR 3.3.1.1.10 SR 3.3.1.1.14	~~≥ [(i)] cm~~

(continued)

Table 3.3.1.1-1 (Page 3 of 7)
SSLC Sensor Instrumentation

	FUNCTION	APPLICABLE MODES OR OTHER SPECIFIED CONDITIONS	REQUIRED CHANNELS	CONDITIONS REFERENCED FROM REQUIRED ACTIONS	SURVEILLANCE REQUIREMENTS	STD DEP16.3-100 ~~ALLOWABLE VALUE~~
	6b. Continued	(f)	4	L	SR 3.3.1.1.1 SR 3.3.1.1.5 SR 3.3.1.1.9 SR 3.3.1.1.10 SR 3.3.1.1.14	
7.	Reactor Vessel Water Level - Low, Level 2					
	7a. ESF Initiation	1, 2, 3	4	N	SR 3.3.1.1.1 SR 3.3.1.1.5 SR 3.3.1.1.9 SR 3.3.1.1.10 SR 3.3.1.1.13	~~≥ [(i)] cm~~
	7b. Isolation Initiation.	1, 2, 3	4	K	SR 3.3.1.1.1 SR 3.3.1.1.5 SR 3.3.1.1.9 SR 3.3.1.1.10 SR 3.3.1.1.14	~~≥ [(i)] cm~~
		(f)	4	L	SR 3.3.1.1.1 SR 3.3.1.1.5 SR 3.3.1.1.9 SR 3.3.1.1.10 SR 3.3.1.1.14	
	STD DEP 16.3-84					
	7c. SLCS and FWRB Initiation	1,2	4	~~G~~ H	SR 3.3.1.1.1 SR 3.3.1.1.6 SR 3.3.1.1.11	~~≥ [(i)] cm~~
8.	Reactor Vessel Water Level– Low, Level 1.5					
	8a. ESF initiation	1, 2, 3 4[e], 5[e]	4	N	SR 3.3.1.1.1 SR 3.3.1.1.5 SR 3.3.1.1.9 SR 3.3.1.1.10 SR 3.3.1.1.13	~~≥ [(i)] cm~~
	8b. Isolation Initiation	1, 2, 3	4	Q	SR 3.3.1.1.1 SR 3.3.1.1.5 SR 3.3.1.1.9 SR 3.3.1.1.10 SR 3.3.1.1.14	~~≥ [(i)] cm~~
	8c. ATWS ADS Inhibit	1, 2	4	H	SR 3.3.1.1.1 SR 3.3.1.1.5 SR 3.3.1.1.9 SR 3.3.1.1.10	~~≥ [(i)] cm~~
9.	Reactor Vessel Water Level– Low, Level 1					
	9a. ADS A, CAMS A, LPFL A & LPFL C Initiation	1, 2, 3 4[e], 5[e]	4	N	SR 3.3.1.1.1 SR 3.3.1.1.5 SR 3.3.1.1.9 SR 3.3.1.1.10 SR 3.3.1.1.13	~~≥ [(i)] cm~~

(continued)

Table 3.3.1.1-1 (Page 4 of 7)
SSLC Sensor Instrumentation

FUNCTION	APPLICABLE MODES OR OTHER SPECIFIED CONDITIONS	REQUIRED CHANNELS	CONDITIONS REFERENCED FROM REQUIRED ACTIONS	SURVEILLANCE REQUIREMENTS	STD DEP16.3-100 ~~ALLOWABLE VALUE~~
9b. ADS B, Diesel Generator, RCW, CAMS B, & LPFL B Initiation	1, 2, 3 4[e], 5[e]	4	N	SR 3.3.1.1.1 SR 3.3.1.1.5 SR 3.3.1.1.9 SR 3.3.1.1.10 SR 3.3.1.1.13	~~≥ [(i)] cm~~
9c. Isolation Initiation	1, 2, 3	4	Q	SR 3.3.1.1.1 SR 3.3.1.1.5 SR 3.3.1.1.9 SR 3.3.1.1.10 SR 3.3.1.1.14	~~≥ [(i)] cm~~
10. Main Steam Isolation Valve– Closure	1	4	G	SR 3.3.1.1.5 SR 3.3.1.1.9 SR 3.3.1.1.10 SR 3.3.1.1.12	~~≤ [(i)] % closed~~
11. Drywell Pressure – High					
11a. RPS Initiation.	1, 2	4	H	SR 3.3.1.1.1 SR 3.3.1.1.5 SR 3.3.1.1.9 SR 3.3.1.1.10 SR 3.3.1.1.12	~~≤ [(i)] MPaG~~
11b. ESF Initiation.	1, 2, 3	4	P	SR 3.3.1.1.1 SR 3.3.1.1.5 SR 3.3.1.1.9 SR 3.3.1.1.10 SR 3.3.1.1.13	~~≤ [(i)] MPaG~~
11c. Isolation Initiation.	1, 2, 3	4	Q	SR 3.3.1.1.1 SR 3.3.1.1.5 SR 3.3.1.1.9 SR 3.3.1.1.10 SR 3.3.1.1.14	~~≤ [(i)] MPaG~~
STD DEP T1 2.4-2					
11d. Feedwater Line Break Mitigation Initiation.	1,2,3	4	P	SR 3.3.1.1.1 SR 3.3.1.1.5 SR 3.3.1.1.9 SR 3.3.1.1.10 SR 3.3.1.1.13	~~≤ [(i)] MPaG~~
12. CRD Water Header Charging Pressure - Low	1,2	4	H	SR 3.3.1.1.1 SR 3.3.1.1.5 SR 3.3.1.1.10	~~≤ [(i)] MPaG~~
	5[a]	4	I	SR 3.3.1.1.1 SR 3.3.1.1.5 SR 3.3.1.1.9 SR 3.3.1.1.10	
13. Turbine Stop Valve– Closure	≥[40] % RTP	4	F	SR 3.3.1.1.5 SR 3.3.1.1.9 SR 3.3.1.1.10 SR 3.3.1.1.12	~~≤ [(i)] % closed~~

(continued)

Table 3.3.1.1-1 (Page 5 of 7)
SSLC Sensor Instrumentation

	FUNCTION	APPLICABLE MODES OR OTHER SPECIFIED CONDITIONS	REQUIRED CHANNELS	CONDITIONS REFERENCED FROM REQUIRED ACTIONS	SURVEILLANCE REQUIREMENTS	STD DEP16.3-100 ~~ALLOWABLE VALUE~~
14.	Turbine Control Valve Fast Closure, Trip Oil Pressure– Low	≥[40] %RTP	4	F	SR 3.3.1.1.1 SR 3.3.1.1.5 SR 3.3.1.1.9 SR 3.3.1.1.10 SR 3.3.1.1.12	~~≥ [(i)] % MPaG oil pressure~~
~~15.~~	~~Main Steam Tunnel Radiation - High~~					
	~~15a. RPS Trip Initiation~~	~~1,2~~	~~4~~	~~H~~	~~SR 3.3.1.1.5~~ ~~SR 3.3.1.1.9~~ ~~SR 3.3.1.1.10~~	~~≤ [ ] gray~~
	~~15b. Isolation Initiation~~	~~1,2,3~~	~~4~~	~~Q~~	~~SR 3.3.1.1.5~~ ~~SR 3.3.1.1.9~~ ~~SR 3.3.1.1.10~~	~~≤ [ ] gray~~
	STD DEP T1 2.4-2					
15.	Feedwater Line Differential Pressure– High	1, 2, 3	4	P	SR 3.3.1.1.1 SR 3.3.1.1.5 SR 3.3.1.1.9 SR 3.3.1.1.10 SR 3.3.1.1.13	~~≤ (i) MPaD~~
16.	Suppression Pool Temperature–High					
	16a. RPS Initiation.	1, 2	4	H	SR 3.3.1.1.1 SR 3.3.1.1.5 SR 3.3.1.1.9 SR 3.3.1.1.10 SR 3.3.1.1.12	~~≤ [(i)] °C~~
	16b. ESF Initiation.	1, 2, 3	4	N	SR 3.3.1.1.1 SR 3.3.1.1.5 SR 3.3.1.1.9 SR 3.3.1.1.10	~~≤ [(i)] °C~~
17.	Condensate Storage Tank Level– Low	1, 2, 3 4[(e)], 5[(e)]	4	M	SR 3.3.1.1.1 SR 3.3.1.1.5 SR 3.3.1.1.9 SR 3.3.1.1.10	~~≥ [(i)] cm~~
18.	Suppression Pool Water Level– High	1, 2, 3 4[(e)], 5[(e)]	4	M	SR 3.3.1.1.1 SR 3.3.1.1.5 SR 3.3.1.1.9 SR 3.3.1.1.10	~~≤ [(i)] cm~~
19.	Main Steam Line Pressure–Low	1	4	G	SR 3.3.1.1.1 SR 3.3.1.1.5 SR 3.3.1.1.9 SR 3.3.1.1.10	~~≤ [(i)] MPaG~~

(continued)

Table 3.3.1.1-1 (Page 6 of 7)
SSLC Sensor Instrumentation

FUNCTION	APPLICABLE MODES OR OTHER SPECIFIED CONDITIONS	REQUIRED CHANNELS	CONDITIONS REFERENCED FROM REQUIRED ACTIONS	SURVEILLANCE REQUIREMENTS	STD DEP16.3-100 ~~ALLOWABLE VALUE~~
20. Main Steam Line Flow– High	1, 2, 3	4 per MSL	Q	SR 3.3.1.1.1 SR 3.3.1.1.5 SR 3.3.1.1.9 SR 3.3.1.1.10 SR 3.3.1.1.14	~~≥ (i) kg/hr~~
21. Condenser Vacuum– Low	1, 2[(d)], 3[(d)]	4	Q	SR 3.3.1.1.1 SR 3.3.1.1.5 SR 3.3.1.1.9 SR 3.3.1.1.10	~~≥ [(i)] MPaG~~
22. Main Steam Tunnel Temperature– High	1, 2, 3	4	Q	SR 3.3.1.1.1 SR 3.3.1.1.5 SR 3.3.1.1.9 SR 3.3.1.1.10	~~≤ [(i)] °C~~
23. Main Turbine Area Temparature– High	1, 2, 3	4	Q	SR 3.3.1.1.1 SR 3.3.1.1.5 SR 3.3.1.1.9 SR 3.3.1.1.10	~~≤ [(i)] °C~~
24a. Reactor Building Area Exhaust Air Radiation– High	1, 2, 3	4	K	SR 3.3.1.1.1 SR 3.3.1.1.5 SR 3.3.1.1.10	~~≤ [(i)] gray~~
	(f), (g)	4	L	SR 3.3.1.1.1 SR 3.3.1.1.5 SR 3.3.1.1.9 SR 3.3.1.1.10 SR 3.3.1.1.14	
24.b Fuel Handling Area Exhaust Air Radiation - High	1,2,3	4	K	SR 3.3.1.1.1 SR 3.3.1.1.5 SR 3.3.1.1.10	~~≤ [(i)] gray~~
	(f), (g)	4	L	SR 3.3.1.1.1 SR 3.3.1.1.5 SR 3.3.1.1.9 SR 3.3.1.1.10 SR 3.3.1.1.14	
25. RCIC Steam Line Flow– High	1,2,3	4	K	SR 3.3.1.1.1 SR 3.3.1.1.5 SR 3.3.1.1.9 SR 3.3.1.1.10	~~≥ (i) kg/h~~
26. RCIC Steam Supply Line Pressure– Low	1,2,3	4	K	SR 3.3.1.1.1 SR 3.3.1.1.5 SR 3.3.1.1.9 SR 3.3.1.1.10	~~≤ [(i)] MPaG~~
27. RCIC Equipment Area Temperature– High	1,2,3	4	K	SR 3.3.1.1.1 SR 3.3.1.1.5 SR 3.3.1.1.9 SR 3.3.1.1.10	~~≤ [(i)] °C~~
28. RHR Area Temperatures– High	2, 3	4 each RHR area	K	SR 3.3.1.1.1 SR 3.3.1.1.5 SR 3.3.1.1.9 SR 3.3.1.1.10	~~≤ [(i)] °C~~

(continued)

Table 3.3.1.1-1 (Page 7 of 7)
SSLC Sensor Instrumentation

	FUNCTION	APPLICABLE MODES OR OTHER SPECIFIED CONDITIONS	REQUIRED CHANNELS	CONDITIONS REFERENCED FROM REQUIRED ACTIONS	SURVEILLANCE REQUIREMENTS	STD DEP16.3-100 ~~ALLOWABLE VALUE~~
29.	CUW Differential Flow– High	1,2,3	4	K	SR 3.3.1.1.1 SR 3.3.1.1.5 SR 3.3.1.1.9 SR 3.3.1.1.10	~~≤ [(i)] Liters/min for ≤ [(i)] Seconds~~
30.	CUW Regenerative Heat Exchanger Area Temperature– High	1,2,3	4	K	SR 3.3.1.1.1 SR 3.3.1.1.5 SR 3.3.1.1.9 SR 3.3.1.1.10	~~≤ [(i)] °C~~
31.	CUW non-regenerative Heat Exchanger Area Temperature– High	1,2,3	4	K	SR 3.3.1.1.1 SR 3.3.1.1.5 SR 3.3.1.1.9 SR 3.3.1.1.10	~~≤ [(i)] °C~~
32.	CUW Equipment Area Temperature– High	1,2,3	4	K	SR 3.3.1.1.1 SR 3.3.1.1.5 SR 3.3.1.1.9 SR 3.3.1.1.10	~~≤ [(i)] °C~~
33.	RCW/RSW Heat Exchanger Room Water Level– High	(h)	4 each RCW/RSW HX Room	K	SR 3.3.1.1.1 SR 3.3.1.1.5 SR 3.3.1.1.9 SR 3.3.1.1.10	~~≤ [(i)] m~~

(a) With any control rod withdrawn from a core cell containing one or more fuel assemblies.

(b) Trip automatically bypassed within each SRNM and not required to be OPERABLE at reactor power levels ≤ [0.0001] % RTP

~~(c) 1. Neutron flux oscillations within any OPRM cell have a period between [1.15] seconds and [3.35] seconds that persists for [10] cycles with a peak to peak amplitude of that is [10] % of point or greater~~
~~2. Neutron flux oscillations within any OPRM cell that have a period between [0.31] and [2.2] seconds become larger than [30] % of point within [3] periods or oscillations with the specified period range that are greater than [10] % of point grow by [30] % of point within [3] cycles.~~(Not Used)

(d) With any Turbine Stop Valve not fully closed.

(e) When associated features are required to be operable.

(f) During CORE ALTERATIONS or operations with a potential for draining the reactor vessel.

(g) During movement of irradiated fuel assemblies in the secondary containment.

(h) When RSW pumps are required to be OPERABLE or in operation.

[This page intentionally left blank]

3.3 INSTRUMENTATION

3.3.1.2 Reactor Protection System (RPS) and Main Steam Isolation Valve (MSIV) Actuation

The information in this section of the reference ABWR DCD, including all subsections, is incorporated by reference with the following departures and site-specific supplements. The site specific supplements partially address COL License Information Item 16.1.

STD DEP T1 3.4-1
STD DEP 16.3-81 (Table 3.3.1.2-1)

ACTIONS

CONDITION	*REQUIRED ACTION*	*COMPLETION TIME*
A. One or more Functions with one channel inoperable.	----------NOTE---------- *Only applicable to Functions 1a, 2a, and 5.* ---------- *A.1 Place affected division in trip.* *OR* *A.2.1 Place affected division in ~~TLU~~ TLF logic output bypass.* *AND* *A.2.2.1 Restore required channel(s) to OPERABLE status* *OR* *A.2.2.2 Place affected division in trip.*	 *6 hours* *6 hours* *30 days* *30 days*
B. One or more Functions with two channels inoperable.	----------NOTE---------- *Only applicable to Functions 1a, 2a, and 5.* ---------- *B.1 Place one affected division in trip.*	 *3 hours*

ACTIONS

CONDITION	*REQUIRED ACTION*	*COMPLETION TIME*
	AND	
	B.2 *Place the other affected division in ~~TLU~~ TLF logic output bypass.*	*6 hours*
	AND	
	B.3 *Restore at least one inoperable channel to OPERABLE status*	*30 days*

SURVEILLANCE REQUIREMENTS

----------NOTE----------
Refer to Table 3.3.1.2-1 to determine which SRs apply for each RPS and MSIV Actuation Function.

SURVEILLANCE		*FREQUENCY*
SR 3.3.1.2.1	*Perform CHANNEL FUNCTIONAL TEST*	*~~[7]~~ days*
SR 3.3.1.2.2	*Perform DIVISION FUNCTIONAL TEST.*	*~~[92~~ 31~~]~~ days*
SR 3.3.1.2.3	*Perform CHANNEL FUNCTIONAL TEST.*	*~~[92~~ 31~~]~~ days*
SR 3.3.1.2.4	*Perform COMPREHENSIVE FUNCTIONAL TEST.*	*18 months*
SR 3.3.1.2.5	*Perform OUTPUT CHANNEL FUNCTIONAL TEST.*	*18 months*
SR 3.3.1.2.6	*Verify RPS RESPONSE TIME is within limits .*	*18 months*
SR 3.3.1.2.7	*Verify ISOLATION RESPONSE TIME is within limits*	*18 months*

Table 3.3.1.2-1 (Page 1 of 1)
RPS and MSIV Actuation

FUNCTION	APPLICABLE MODES OR OTHER SPECIFIED CONDITIONS	REQUIRED CHANNELS	SURVEILLANCE REQUIREMENTS
1. RPS Actuation.			
a. LOGIC CHANNELs	1, 2, 5[(a)](b)	4	SR 3.3.1.2.2 SR 3.3.1.2.4 SR 3.3.1.2.6
b. OUTPUT CHANNELs	1, 2, 5[(a)]	4	~~SR 3.3.1.2.2~~ SR 3.3.1.2.4 SR 3.3.1.2.5 SR 3.3.1.2.6
2. MSIVs and MSL Drain Valves Actuation.			
a. LOGIC CHANNELs	1, 2, 3	4	SR 3.3.1.2.2 SR 3.3.1.2.4 SR 3.3.1.2.7
b. OUTPUT CHANNELs	1, 2, 3	4	~~SR 3.3.1.2.2~~ SR 3.3.1.2.4 SR 3.3.1.2.5 SR 3.3.1.2.7
3. Manual RPS Scram.	1, 2, 5[(a)]	2	SR 3.3.1.2.1
4. Reactor Mode Switch-Shutdown Position.	1, 2, 5[(a)]	2	SR 3.3.1.2.4
5. Manual MSIV Actuation.	1, 2, 3	4	SR 3.3.1.2.3 SR 3.3.1.2.4

(a) With any control rod withdrawn in a core cell containing at least one fuel assembly.

(b) SRNM and APRM LOGIC CHANNELS are only required to be OPERABLE when the associated Functions in LCO 3.3.1.1 are required to be OPERABLE.

[This page intentionally left blank]

3.3 INSTRUMENTATION

3.3.1.3 Standby Liquid Control (SLC) and Feedwater Runback (FWRB) Actuation

The information in this section of the reference ABWR DCD, including all subsections, is incorporated by reference with no departures and the following site-specific supplement. The site specific supplement partially addresses COL License Information Item 16.1.

SURVEILLANCE REQUIREMENTS

----------NOTE----------
Refer to Table 3.3.1.3-1 to determine which SRs apply for each function.

SURVEILLANCE		*FREQUENCY*
SR 3.3.1.3.1	*Perform DIVISION FUNCTIONAL TEST.*	*[~~92~~ 31] days*
SR 3.3.1.3.2	*Perform LOGIC SYSTEM FUNCTIONAL TEST.*	*18 months*
SR 3.3.1.3.3	*Perform OUTPUT CHANNEL FUNCTIONAL TEST.*	*18 months*

[This page intentionally left blank]

3.3 INSTRUMENTATION

3.3.1.4 ESF Actuation Instrumentation

The information in this section of the reference ABWR DCD, including all subsections, is incorporated by reference with the following departures and site-specific supplements. These site specific supplements partially address COL License Information Item 16.1.

STD DEP T1 2.4-2
STD DEP T1 2.4-3
STD DEP T1 3.4-1 (All)
STD DEP 8.3-1 (Table 3.3.1.4-1)
STD DEP 16.3-50
STD DEP 16.3-86
STD DEP 16.3-94
STD DEP 16.3-100

ACTIONS

CONDITION	REQUIRED ACTION	COMPLETION TIME
B. One or more Functions with one or more LOGIC CHANNELS inoperable.	*B.1 ~~Place associated channel in bypass.~~*	1 hour
	~~AND~~	
OR	*~~B.2.1~~ Restore channel(s) to OPERABLE status*	*~~30 days~~*
	~~OR~~	
One or more Functions with one or more OUTPUT CHANNELS ~~manual initiation channel~~ inoperable.	*~~B.2.2 Verify redundant feature(s) are OPERABLE~~*	*~~30 days~~*
C. One or more Functions with one or more SENSOR CHANNELS inoperable.	*C.1 Restore ~~at least one required~~ channel(s) to OPERABLE status.*	*1 hour*
~~OR~~		
~~One or more Functions with two LOGIC CHANNELS or two manual initiation channels inoperable~~		

ACTIONS (continued)

CONDITION	REQUIRED ACTION	COMPLETION TIME
D. One or more Functions with one or more OUTPUT CHANNELs inoperable. *OR* *HPCF C diverse logic manual initiation channel inoperable.*	*D.1 Restore ESF actuation capability for the affected devices.* *OR* *D.2 ----------NOTE---------- This Action applies only to Functions 10.b, 12.b, 13.b, and 14.b. ----------* *Actuate associated device(s).*	*1 hour* *1 hour*
E. One or more Functions with one or more inoperable SENSOR CHANNELS.	*E.1 Restore inoperable channel.* *OR* *E.2 Declare associated device(s) inoperable.*	*24 hours* *24 hours*
F. One or more Functions with ~~two~~ one or more manual initiation channels inoperable.	*F.1 Restore ~~at least one channel to OPERABLE status~~ manual initiation capability for the affected Functions.*	*7 days*

ACTIONS (continued)

CONDITION	REQUIRED ACTION	COMPLETION TIME
H. One or more ADS OUTPUT CHANNELS inoperable ~~on~~ in one ~~or more~~ ADS ~~valves~~ division. *OR* *One or more ADS LOGIC CHANNELS inoperable in one ADS division.* *OR* *One or more ADS manual initiation channels inoperable in one ADS division.* *OR* *One or more ATWS manual ADS inhibit channels inoperable in one ADS division.* *OR* *Five required ADS SENSOR CHANNELS inoperable in one ADS division.*	*H.1 Restore channel(s) to OPERABLE status.*	*3 days if only one high pressure ECCS subsystem is OPERABLE* *AND* *7 days if two or more high pressure ECCS subsystems are OPERABLE.*

ACTIONS (continued)

CONDITION	REQUIRED ACTION	COMPLETION TIME
I. One or more SENSOR CHANNELS inoperable. *OR* *One or more ADS ~~valves with two~~ OUTPUT CHANNELS inoperable in two ADS divisions.* *OR* *One or more ADS LOGIC CHANNELS inoperable in two ADS divisions.* *OR* *One or more ADS manual initiation channels inoperable in two ADS divisions.* *OR* *One or more ATWS manual ADS inhibit channels inoperable in two ADS divisions.* *OR* *Required Action and associated Completion Time of Condition H not met.*	*I.1 Declare associated ESF features inoperable.*	*1 hour*

ACTIONS (continued)

CONDITION	REQUIRED ACTION	COMPLETION TIME
M. ADS initiation capability not maintained in both ADS divisions. *OR* *Required Actions and associated Completion Times of Condition ~~H,~~ J, K, or L not met.*	*M.1 Declare ADS valves inoperable.*	*Immediately*

SURVEILLANCE REQUIREMENTS

----------NOTE----------
Refer to Table 3.3.1.4-1 to determine which SRs apply for each ESF Actuation Instrumentation Function.

SURVEILLANCE		FREQUENCY
STD DEP 16.3-100 *SR 3.3.1.4.3*	*Perform DIVISIONAL FUNCTIONAL TEST* in accordance with TS 5.5.2.11, Setpoint Control Program.	*~~[92~~ 31~~]~~ days*
STD DEP 16.3-100 *SR 3.3.1.4.6*	*Perform SENSOR CHANNEL CALIBRATION* in accordance with TS 5.5.2.11, Setpoint Control Program.	*18 months*
STD DEP 16.3-86 *SR 3.3.1.4.7*	*Perform ~~Manual initiation~~ CHANNEL FUNCTIONAL TEST.*	*18 months*

Table 3.3.1.4-1 (Page 1 of 6)
ESF Actuation Instrumentation

FUNCTION	APPLICABLE MODES OR OTHER SPECIFIED CONDITIONS	REQUIRED CHANNELS	APPLICABLE CONDITIONS	SURVEILLANCE REQUIREMENTS	STD DEP16.3-100 ~~ALLOWABLE VALUE~~
1. Low Pressure Core Flooder Actuation.					
1a. LPFL Pump Discharge Pressure– High.	1,2,3, 4[g],5[g]	1 per pump[a]	C	SR 3.3.1.4.1 SR 3.3.1.4.3 SR 3.3.1.4.4 SR 3.3.1.4.6	~~≥ [(k)] MPaG~~
1b. LPFL Pump Discharge Flow– Low.	1,2,3, 4[g],5[g]	1 per pump[a]	C	SR 3.3.1.4.1 SR 3.3.1.4.3 SR 3.3.1.4.4 SR 3.3.1.4.6	~~≤ [(k)] litfers per min~~
1c. LPFL System Initiation.	1,2,3, 4[g],5[g]	2 per subsystem[b]	~~B, C~~	SR 3.3.1.4.3 SR 3.3.1.4.4 SR 3.3.1.4.5	~~NA~~
1d. LPFL Device Actuation.	1,2,3, 4[g],5[g]	1 per actuated device[c]	~~D~~ B	SR 3.3.1.4.2 ~~SR 3.3.1.4.3~~ SR 3.3.1.4.4 SR 3.3.1.4.5	~~NA~~
1e. LPFL Manual Initiation.	1,2,3, 4[g],5[g]	2 per subsystem[d]	~~B, F~~	SR 3.3.1.4.3 SR 3.3.1.4.4 SR 3.3.1.4.7	~~NA~~
2. High Pressure Core Flooder Actuation.					
2a. HPCF Pump Discharge Pressure– High.	1,2,3, 4[g],5[g]	1 per pump[a]	C	SR 3.3.1.4.1 SR 3.3.1.4.3 SR 3.3.1.4.4 SR 3.3.1.4.6	~~≥ [(k)] MPaG~~
2b. HPCF Pump Discharge Flow– Low.	1,2,3, 4[g],5[g]	1 per pump[a]	C	SR 3.3.1.4.1 SR 3.3.1.4.3 SR 3.3.1.4.4 SR 3.3.1.4.6	~~≤ [(k)] liters per min~~
2c. HPCF Pump Suction Pressure– Low	1,2,3, 4[g],5[g]	1 per pump[a]	C	SR 3.3.1.4.1 SR 3.3.1.4.3 SR 3.3.1.4.4 SR 3.3.1.4.6	~~≥ [(k)] MPaG~~
2d. HPCF System Initiation.	1,2,3, 4[g],5[g]	2 per subsystem[b]	~~B, C~~	SR 3.3.1.4.3 SR 3.3.1.4.4 SR 3.3.1.4.5	~~NA~~
2e. HPCF Device Actuation.	1,2,3, 4[g],5[g]	1 per actuated device[c]	~~D~~ B	SR 3.3.1.4.2 ~~SR 3.3.1.4.3~~ SR 3.3.1.4.4 SR 3.3.1.4.5	~~NA~~
2f. HPCF B Manual Initiation.	1,2,3, 4[g],5[g]	2[d]	~~B, F~~	SR 3.3.1.4.3 SR 3.3.1.4.4 SR 3.3.1.4.7	

(continued)

Table 3.3.1.4-1 (Page 2 of 6)
ESF Actuation Instrumentation

FUNCTION	APPLICABLE MODES OR OTHER SPECIFIED CONDITIONS	REQUIRED CHANNELS	APPLICABLE CONDITIONS	SURVEILLANCE REQUIREMENTS	STD DEP16.3-100 ~~ALLOWABLE VALUE~~
2g. HPCF C Diverse Logic Manual Initiation.	1,2,3, 4[g],5[g]	1[d]	D	SR 3.3.1.4.3 SR 3.3.1.4.4 SR 3.3.1.4.7	~~NA~~
3. Reactor Core Isolation Cooling System Actuation.					
3a. RCIC Pump Discharge Pressure– High.	1,2[e],3[e]	1[a]	C	SR 3.3.1.4.1 SR 3.3.1.4.3 SR 3.3.1.4.4 SR 3.3.1.4.6	~~≥ (k)] MPaG~~
3b. RCIC Pump Discharge Flow– Low.	1,2[e],3[e]	1[a]	C	SR 3.3.1.4.1 SR 3.3.1.4.3 SR 3.3.1.4.4 SR 3.3.1.4.6	~~≤ [(k)] liters per min~~
3c. RCIC System Initiation.	1,2[e],3[e]	2[b]	~~B, C~~	SR 3.3.1.4.3 SR 3.3.1.4.4 SR 3.3.1.4.5	~~NA~~
3d. RCIC Device Actuation.	1,2[e],3[e]	1 per actuated device[c]	~~D~~ B	SR 3.3.1.4.2 ~~SR 3.3.1.4.3~~ SR 3.3.1.4.4 SR 3.3.1.4.5	~~NA~~
3e. RCIC Manual Initiation.	1,2[e],3[e]	2[d]	~~B, F~~	SR 3.3.1.4.3 SR 3.3.1.4.4 SR 3.3.1.4.7	~~NA~~
4. Automatic Depressurization System.					
4a. ADS System Initiation.	1, 2[f],3[f]~~,4[f],5[f]~~	2 per subsystem[b]	H, I	SR 3.3.1.4.3 SR 3.3.1.4.4	~~NA~~
4b. ADS Device Actuation.	1, 2[f],3[f]~~,4[f],5[f]~~	2 per ADS valve[c]	H, I	SR 3.3.1.4.2 ~~SR 3.3.1.4.3~~ SR 3.3.1.4.4 SR 3.3.1.4.5	~~NA~~
4c. ADS Manual Initiation.	1, 2[f],3[f]~~,4[f],5[f]~~	2 per subsystem[d]	H, I	SR 3.3.1.4.3 SR 3.3.1.4.4 SR 3.3.1.4.7	~~NA~~
4d. ADS Division I ECCS Pump Discharge Pressure– High (permissive)	1,2[f],3[f]	1 per each of 5 pumps[a]	H, J, K, L, M	SR 3.3.1.4.3 SR 3.3.1.4.4 SR 3.3.1.4.6	~~≥ [(k)] MPaG~~
4e. ADS Division II ECCS Pump Discharge Pressure– High (permissive)	1,2[f],3[f]	1 per each of 5 pumps[a]	H, J, K, L, M	SR 3.3.1.4.3 SR 3.3.1.4.4 SR 3.3.1.4.6	~~≥ [(k)] MPaG~~
4f. ATWS Manual ADS Inhibit.	1,2	2 per subsystem[d]	H, I	SR 3.3.1.4.3 SR 3.3.1.4.4 SR 3.3.1.4.7	~~NA~~

(continued)

Table 3.3.1.4-1 (Page 3 of 6)
ESF Actuation Instrumentation

	FUNCTION	APPLICABLE MODES OR OTHER SPECIFIED CONDITIONS	REQUIRED CHANNELS	APPLICABLE CONDITIONS	SURVEILLANCE REQUIREMENTS	STD DEP16.3-100 ~~ALLOWABLE VALUE~~
	STD DEP 8.3-1					
5.	*Diesel-Generator Actuation.*					
	5a. *Division I, II, & III Loss of Voltage –* ~~6.9~~ **4.16** *kV.*	1,2,3, 4[h],5[h]	1 per phase[a]	C	SR 3.3.1.4.1 SR 3.3.1.4.2 SR 3.3.1.4.3 SR 3.3.1.4.4 SR 3.3.1.4.5 SR 3.3.1.4.6	~~≥ [(k)] V and ≤ [(k)] V for ≥ [(k)] s and ≤ [(k)] s~~
	5b. *Division I, II, & III Degraded Voltage –* ~~6.9~~ **4.16** *kV.*	1,2,3, 4[h],5[h]	1 per phase[a]	C	SR 3.3.1.4.1 SR 3.3.1.4.2 SR 3.3.1.4.3 SR 3.3.1.4.4 SR 3.3.1.4.5 SR 3.3.1.4.6	~~≥ [(k)] V and ≤ [(k)] V for ≥ [(k)] s and ≤ [(k)] s~~
	5c. *DG System Initiation.*	1,2,3, 4[h],5[h]	~~2~~1 per DG[b]	~~B, C~~	SR 3.3.1.4.3 SR 3.3.1.4.4 SR 3.3.1.4.5	~~NA~~
	5d. *DG Device Actuation.*	1,2,3, 4[h],5[h]	1 per actuated device[c]	D	SR 3.3.1.4.2 ~~SR 3.3.1.4.3~~ SR 3.3.1.4.4	~~NA~~
	5e. *DG Manual Initiation.*	1,2,3, 4[h],5[h]	1 per DG[d]	~~B, F~~	SR 3.3.1.4.3 SR 3.3.1.4.4 SR 3.3.1.4.7	~~NA~~
6.	*Standby Gas Treatment System Actuation.*					
	6a. *SGTS Initiation.*	1,2,3 (i)(j)	1 per subsystem[b]	~~B, C~~	SR 3.3.1.4.3 SR 3.3.1.4.4	~~NA~~
	6b. *SGTS Device Actuation.*	1,2,3 (i)(j)	1 per actuated device[c]	D	SR 3.3.1.4.2 ~~SR 3.3.1.4.3~~ SR 3.3.1.4.4	
	STD DEP 8.3-1					
7.	*Reactor Building Cooling Water/Service Water Actuation.*					
	7a. *RCW/RSW System Initiation.*	1,2,3, 4[g],5[g]	~~2~~1 per subsystem[b]	~~B, C~~	SR 3.3.1.4.3 SR 3.3.1.4.4	~~NA~~
	7b. *RCW/RSW Device Actuation.*	1,2,3, 4[g],5[g]	1 per actuated device[c]	D	SR 3.3.1.4.2 ~~SR 3.3.1.4.3~~ SR 3.3.1.4.4	~~NA~~
	7c. *RCW/RSW Manual Initiation.*	1,2,3, 4[g],5[g]	~~2~~1 per subsystem[d]	~~B, F~~	SR 3.3.1.4.3 SR 3.3.1.4.4 SR 3.3.1.4.7	~~NA~~

(continued)

Table 3.3.1.4-1 (Page 4 of 6)
ESF Actuation Instrumentation

FUNCTION	APPLICABLE MODES OR OTHER SPECIFIED CONDITIONS	REQUIRED CHANNELS	APPLICABLE CONDITIONS	SURVEILLANCE REQUIREMENTS	STD DEP16.3-100 ~~ALLOWABLE VALUE~~
7d. Division I, II, & III Loss of Voltage - ~~6.9~~ **4.16** kV.	1,2,3, 4[h],5[h]	1 per phase[a]	C	SR 3.3.1.4.1 SR 3.3.1.4.2 SR 3.3.1.4.3 SR 3.3.1.4.4 SR 3.3.1.4.5 SR 3.3.1.4.6	~~≥ [(k)] V and ≤ [(k)] V for ≥ [(k)] s and ≤ [(k)] s~~
7e. Division I, II, & III Degraded Voltage - ~~6.9~~ **4.16** kV.	1,2,3, 4[h],5[h]	1 per phase[a]	C	SR 3.3.1.4.1 SR 3.3.1.4.2 SR 3.3.1.4.3 SR 3.3.1.4.4 SR 3.3.1.4.5 SR 3.3.1.4.6	~~≥ [(k)] V and ≤ [(k)] V for ≥ [(k)] s and ≤ [(k)] s~~
8. Containment Atmospheric Monitoring.					
8a. CAM System Initiation.	1,2,3	~~2~~1 per subsystem[b]	~~B, C~~	SR 3.3.1.4.3 SR 3.3.1.4.4	~~NA~~
8b. AM Device Actuation.	1,2,3	1 per actuated device[c]	D	SR 3.3.1.4.2 ~~SR 3.3.1.4.3~~ SR 3.3.1.4.4	~~NA~~
9. Suppression Pool Cooling Actuation.					
9a. SPC System Initiation.	1,2,3, 4[g],5[g]	~~2~~1 per subsystem[b]	~~B, C~~	SR 3.3.1.4.3 SR 3.3.1.4.4	~~NA~~
9b. SPC Device Actuation.	1,2,3, 4[g], 5[g]	1 per actuated device[c]	D	SR 3.3.1.4.2 ~~SR 3.3.1.4.3~~ SR 3.3.1.4.4	~~NA~~
9c. SPC Manual Initiation.	1,2,3, 4[g],5[g]	~~2~~1 per subsystem[d]	~~B, F~~	SR 3.3.1.4.3 SR 3.3.1.4.4 SR 3.3.1.4.7	~~NA~~
10. Containment Isolation Valves Actuation.					
10a. CIV System Initiation.	1,2,3 ~~(i)(j)~~	1 per division[b]	B	SR 3.3.1.4.3 SR 3.3.1.4.4	~~NA~~
10b. CIV Device Actuation.	1,2,3 ~~(i)(j)~~	1 per actuated device[c]	D	SR 3.3.1.4.2 SR 3.3.1.4.4	~~NA~~
10c. Drywell Sump Drain LCW Radiation– High	1,2,3	1[a]	E	SR 3.3.1.4.3 SR 3.3.1.4.4 SR 3.3.1.4.6	~~≤ [(k)] gray~~
10d. Drywell Sump Drain HCW Radiation– High	1,2,3	1[a]	E	SR 3.3.1.4.3 SR 3.3.1.4.4 SR 3.3.1.4.6	~~≤ [(k)] gray~~
10e. RCW Inside Drywell System Isolation Initiation.	1,2,3	2 per division[b]	B	SR 3.3.1.4.3 SR 3.3.1.4.4	~~NA~~

(continued)

Table 3.3.1.4-1 (Page 5 of 6)
ESF Actuation Instrumentation

FUNCTION	APPLICABLE MODES OR OTHER SPECIFIED CONDITIONS	REQUIRED CHANNELS	APPLICABLE CONDITIONS	SURVEILLANCE REQUIREMENTS	STD DEP16.3-100 ~~ALLOWABLE VALUE~~
10f. RCW Inside Drywell Isolation Device Actuation.	1,2,3	1 per actuated device[c]	D	SR 3.3.1.4.2 SR 3.3.1.4.4	
10g. Exhaust Air Radiation – High Isolation Initiation.	1,2,3, (i),(j)	1 per division[b]	B	SR 3.3.1.4.3 SR 3.3.1.4.4	
10h. Exhaust Air Radiation – High Isolation Device Actuation.	1,2,3. (i),(j)	1 per actuated device[c]	D	SR 3.3.1.4.2 SR 3.3.1.4.4	~~5~~
11. CIV Divisional Manual Initiation.	*1,2,3 ~~(i)(j)~~*	*~~2~~1 per division[d]*	*~~B, C~~ F*	*SR 3.3.1.4.3 SR 3.3.1.4.4 SR 3.3.1.4.7*	*~~NA~~*
12. Reactor Core Isolation Cooling Isolation Actuation.					
12a. RCIC System Isolation Initiation	*1,2,3*	*~~2~~1 per division[b]*	*~~B, C~~*	*SR 3.3.1.4.3 SR 3.3.1.4.4*	*~~NA~~*
12b. RCIC Isolation Device Actuation.	*1,2,3*	*1 per actuated device[c]*	*D*	*SR 3.3.1.4.2 ~~SR 3.3.1.4.3~~ SR 3.3.1.4.4*	*~~NA~~*
12c. RCIC Manual Isolation Initiation.	*1,2,3*	*~~2~~1 per division[d]*	*~~B, F~~*	*SR 3.3.1.4.3 SR 3.3.1.4.4 SR 3.3.1.4.7*	*~~NA~~*
STD DEP T1 2.4-3					
12d. RCIC Turbine Exhaust ~~Diaphragm~~ Pressure - High..	*1,2,3*	*2 per division [a]*	*I*	*SR 3.3.1.4.1 SR 3.3.1.4.3 SR 3.3.1.4.4 SR 3.3.1.4.6*	*~~≥ [(k)] MPaG~~*
STD DEP 16.3-94					
13. Reactor Water Cleanup Isolation Actuation.					
13a. CUW System Isolation Initiation.	*1,2,3 (i)*	*~~2~~1 per division[b]*	*~~B, C~~*	*SR 3.3.1.4.3 SR 3.3.1.4.4*	*~~NA~~*
13b. CUW Isolation Device Actuation.	*1,2,3 (i)*	*1 per actuated device[c]*	*D*	*SR 3.3.1.4.2 ~~SR 3.3.1.4.3~~ SR 3.3.1.4.4*	*~~NA~~*
13c. CUW Isolation on SLC Initiation.	*1,2~~,3~~*	*1 per SLC division[a]*	*E*	*SR 3.3.1.4.4*	*~~NA~~*
STD DEP 16.3-50					
14. Shutdown Cooling System Isolation Actuation.					
14a. SD Cooling System Isolation Initiation.	*1,2,3, (i)*	*~~2~~1 per division[b]*	*~~B, C~~*	*SR 3.3.1.4.3 SR 3.3.1.4.4*	*~~NA~~*
14b. SD Cooling Isolation Device Actuation.	*1,2,3, (i)*	*1 per actuated device[c]*	*D*	*SR 3.3.1.4.2 ~~SR 3.3.1.4.3~~ SR 3.3.1.4.4*	*~~NA~~*

(continued)

Table 3.3.1.4-1 (Page 6 of 6)
ESF Actuation Instrumentation

FUNCTION	*APPLICABLE MODES OR OTHER SPECIFIED CONDITIONS*	*REQUIRED CHANNELS*	*APPLICABLE CONDITIONS*	*SURVEILLANCE REQUIREMENTS*	STD DEP16.3-100 ~~*ALLOWABLE VALUE*~~
STD DEP T1 2.4-2 15. Feedwater Line Break Mitigation Actuation.					
15a. Feedwater Line Break Mitigation Initiation.	1,2,3	1 per division[(b)]	B	SR 3.3.1.4.3 SR 3.3.1.4.4 SR 3.3.1.4.5	~~*NA*~~
15b. Feedwater Line Break Mitigation Device Actuation.	1,2,3	1 per actuated device[(c)]	B	SR 3.3.1.4.2 SR 3.3.1.4.4 SR 3.3.1.4.5	~~*NA*~~

STD DEP 16.3-86

(a) These are SENSOR CHANNEL Functions.
(b) These are LOGIC CHANNEL Functions.
(c) These are OUTPUT CHANNEL Functions.
(d) These are manual ~~initiation~~ channel Functions.
(e) With reactor pressure greater than 1.03 MPaG.
(f) With reactor pressure greater than 0.343 MPaG.
(g) When associated subsystems are required to be operable.
(h) When associated Diesel-Generator is required to be OPERABLE per LCO 3.8.2 "AC Sources - Shutdown"
(i) During CORE ALTERATIONS and operations with the potential for draining the reactor vessel.
(j) During movement of irradiated fuel assemblies in the secondary containment.

[This page intentionally left blank]

3.3 INSTRUMENTATION

3.3.2.1 Startup Range Monitor (SRNM) Instrumentation

The information in this section of the reference ABWR DCD, including all subsections, is incorporated by reference with no departures, but with the following site-specific supplements. These site specific supplements partially address COL License Information Item 16.1.

SURVEILLANCE REQUIREMENTS (Continued)

SURVEILLANCE		*FREQUENCY*
SR 3.3.2.1.3	----------NOTE---------- *Not required to be met with four or less fuel assemblies adjacent to the SRNM and no other fuel assemblies in the associated core quadrant.* ---------- *Verify count rate is ≥ 3.0 cps.*	*12 hours during CORE ALTERATIONS* *AND* *24 hours*
SR 3.3.2.1.4	*Perform CHANNEL FUNCTIONAL TEST.*	*~~[7]~~ days*
SR 3.3.2.1.5	*Perform CHANNEL FUNCTIONAL TEST*	*~~[31]~~ days*
SR 3.3.2.1.6	----------NOTE---------- *Neutron detectors are excluded.* ---------- *Perform CHANNEL CALIBRATION*	*18 months*

[This page intentionally left blank]

3.3 INSTRUMENTATION

3.3.3.1 Essential ~~Multiplexing System~~ Communication Function *(~~EMS~~*ECF*)*

The information in this section of the reference ABWR DCD, including all subsections, is incorporated by reference with the following departure and site-specific supplements. These site specific supplements partially address COL License Information Item 16.1.

STD DEP T1 3.4-1

*LCO 3.3.3.1 Four divisions of ~~EMS~~*ECF *data transmission shall be OPERABLE.*

ACTIONS

CONDITION	REQUIRED ACTION	COMPLETION TIME
*A. One or more data transmission segments inoperable in one ~~EMS~~*ECF *division with data transmission maintained.*	----------NOTE---------- *LCO 3.0.4 is not applicable.* ---------- *A.1 Restore all data transmission segments to OPERABLE status.*	*Prior to entering MODE 2 following next MODE 4 entry.*
*B. One or more data transmission segments inoperable in two or more ~~EMS~~*ECF *divisions with data transmission maintained in all divisions.*	*B.1 Restore all data transmission segments in at least three ~~EMS~~*ECF *divisions to OPERABLE status.*	*~~[~~30~~]~~ days*
*D. One or more ~~EMS~~*ECF *divisions inoperable.*	----------NOTE---------- *LCO 3.0.4 is not applicable.* ---------- *D.1 Declare affected Functions and supported Features inoperable.*	*4 hours*

SURVEILLANCE REQUIREMENTS

SURVEILLANCE		*FREQUENCY*
SR 3.3.3.1.1	*Verify the required data transmission path segments are OPERABLE.*	*~~[92~~ 31~~]~~ days*
SR 3.3.3.1.2	*Perform a comprehensive network performance test.*	*18 months*

3.3 INSTRUMENTATION

3.3.4.1 Anticipated Transient Without Scram (ATWS) and End-of-Cycle Recirculation Pump Trip (EOC-RPT) Instrumentation

The information in this section of the reference ABWR DCD, including all subsections, is incorporated by reference with the following departure and site-specific supplements. The site specific supplements partially address COL License Information Item 16.1.

STD DEP 16.3-100

LCO 3.3.4.1 *The channels for each Function listed in Table 3.3.4.1-1 shall be OPERABLE.*

APPLICABILITY: *According to Table 3.3.4.1-1.*

----------NOTE----------
Separate Condition entry is allowed for each channel.

ACTIONS

CONDITION	REQUIRED ACTION	COMPLETION TIME
A. One or more Functions with one inoperable channel.	*----------NOTE---------- Applies only to Functions 1, 3, 5, 11, and 14 in Table 3.3.4.1-1. ----------*	
	A.1.1 Place channel(s) in bypass.	*6 hours*
	AND	
	A.1.2.1 Restore channel(s) to OPERABLE status.	*14 days*
	OR	
	A.1.2.2 Place channel(s) in trip.	*14 days*
	OR	

(continued)

ACTIONS (continued)

CONDITION	*REQUIRED ACTION*	*COMPLETION TIME*
	A.2 Place channel(s) in trip.	*6 hours*
B. One or more Functions with two or more channels inoperable.	*----------NOTE---------- Applies only to Functions 1, 3, 5, 11, and 14 in Table 3.3.4.1-1.* *----------* *B.1 Restore two channels to OPERABLE status.*	*72 hours*
C. One or more Functions with one channel inoperable.	*----------NOTE---------- Applies only to Functions 2, 4, and 9 in Table 3.3.4.1-1.* *----------* *C.1.1 Place channel(s) in bypass.* *AND* *C.1.2.1 Restore channel(s) to OPERABLE status.* *OR* *C.1.2.2 Place channel(s) in trip.* *OR* *C.2 Place channel(s) in trip.*	*6 hours* *30 days* *30 days* *6 hours*
D. One or more Functions with two channels inoperable.	*----------NOTE---------- Applies only to Functions 2, 4, and 9 in Table 3.3.4.1-1.* *----------*	

(continued)

ACTIONS (continued)

CONDITION	*REQUIRED ACTION*	*COMPLETION TIME*
	D.1 *Restore one inoperable channel to OPERABLE status.*	*72 hours*
E. One or more Functions with three or more channels inoperable.	*----------NOTE---------- Applies only to Functions 2, 4, and 9 in Table 3.3.4.1-1.* ---------- *E.1* *Restore at least one inoperable channel to OPERABLE status.*	*[24] hours*
F. Required Action and associated Completion Time of Condition C, D, or E not met.	*----------NOTE---------- Applies only to Functions 4 in Table 3.3.4.1-1.* ---------- *F.1* *Apply the MCPR limit for inoperable EOC-RPT as specified in the COLR.* *OR* *F.2* *Reduce power to ≤ 40% RTP.*	*[2] hours* *[2] hours*
G. One or more Functions with one or more channels inoperable.	*----------NOTE---------- Applies only to Functions 6, 7, 8, 10, 12, 13, 15, and 16 in Table 3.3.4.1-1.* ---------- *G.1* *Restore channels to OPERABLE status.*	*[24] hours*

(continued)

ACTIONS (continued)

CONDITION	*REQUIRED ACTION*		*COMPLETION TIME*
H. Required Action and associated Completion Time not met.	*H.1*	*----------NOTE---------- Applies only to Functions 6, 7, 8, and 16 in Table 3.3.4.1-1. ---------- Declare affected Functions and supported Features inoperable*	*Immediately*
	OR		
	H.2	*----------NOTE---------- Applies only to Function 1, 2, 3, 5, 9, 10, 12, 13, 14, and 15 in Table 3.3.4.1-1. ---------- Be in MODE 3.*	*12 hours*

SURVEILLANCE REQUIREMENTS

----------NOTE----------
Refer to Table 3.3.4.1-1 to determine the applicability of the SRs to each RPT Function.

SURVEILLANCE		*FREQUENCY*
SR 3.3.4.1.1	*Perform SENSOR CHANNEL CHECK.*	*12 hours*
STD DEP 16.3-100 *SR 3.3.4.1.2*	*Perform CHANNEL FUNCTIONAL TEST* in accordance with TS 5.5.2.11, Setpoint Control Program.	*[~~92~~ 31] days*
STD DEP 16.3-100 *SR 3.3.4.1.3*	*Perform SENSOR CHANNEL CALIBRATION* in accordance with TS 5.5.2.11, Setpoint Control Program.	*18 months*
SR 3.3.4.1.4	*Perform LOGIC SYSTEM FUNCTIONAL TEST.*	*18 months*
SR 3.3.4.1.5	*Verify the RPT SYSTEM RESPONSE TIME is within limits.*	*18 months*
SR 3.3.4.1.6	*Perform COMPREHENSIVE FUNCTIONAL TEST.*	*18 months*
SR 3.3.4.1.7	*Perform CHANNEL FUNCTIONAL TEST*	*7 days*

Table 3.3.4.1-1 (Page 1 of 2)
ATWS and EOC-RPT Instrumentation

FUNCTION	*REQUIRED CHANNELS*	*APPLICABLE MODES OR OTHER SPECIFIED CONDITIONS*	*SURVEILLANCE REQUIREMENTS*	STD DEP 16.3-100 ~~*ALLOWABLE VALUES*~~
1. Feedwater Reactor Vessel Water Level-Low, Level 3.	*3*	*1,2*	*SR 3.3.4.1.1* *SR 3.3.4.1.2* *SR 3.3.4.1.3* *SR 3.3.4.1.4* *SR 3.3.4.1.5*	~~*≥ [(b)] cm*~~
2. Reactor Water Vessel Level-Low, Level 2.	*4*	*1,2*	*SR 3.3.4.1.1* *SR 3.3.4.1.2* *SR 3.3.4.1.3* *SR 3.3.4.1.4* *SR 3.3.4.1.5* *SR 3.3.4.1.6*	~~*≥ [(b)] cm*~~
3. SB&PC Reactor Steam Dome Pressure – High.	*3*	*1,2*	*SR 3.3.4.1.1* *SR 3.3.4.1.2* *SR 3.3.4.1.3* *SR 3.3.4.1.4* *SR 3.3.4.1.5*	~~*≤ [(b)] MPaG*~~
4. EOC-RPT Initiation	*4*	*≥ 40% RTP.*	*SR 3.3.4.1.2* *SR 3.3.4.1.5* *SR 3.3.4.1.6*	~~*NA*~~
5. RPT Trip Initiation Function of the RFC.	*3*	*1,2*	*SR 3.3.4.1.2* *SR 3.3.4.1.4*	~~*NA*~~
6. ASD Pump Trip Actuation.	*1 per ASD*	*1,2*	*SR 3.3.4.1.4*	~~*NA*~~
7. ASD Pump Trip Timers.	*1 per ASD*	*1,2*	*SR 3.3.4.1.3* *SR 3.3.4.1.4*	~~*footnote*~~ ~~(a)~~
8. ASD Pump Trip Load Interruption	*1 per ASD*	*1,2*	*SR 3.3.4.1.4*	~~*NA*~~
9. RPS Scram Follow Signal.	*4*	*1,2*	*SR 3.3.4.1.2* *SR 3.3.4.1.4* *SR 3.3.4.1.6*	~~*NA*~~

Table 3.3.4.1-1 (Page 2 of 2)
ATWS and EOC-RPT Instrumentation

FUNCTION	*REQUIRED CHANNELS*	*APPLICABLE MODES OR OTHER SPECIFIED CONDITIONS*	*SURVEILLANCE REQUIREMENTS*	STD DEP 16.3-100 ~~*ALLOWABLE VALUES*~~
10. Manual ATWS-ARI/SLCS Initiation.	*2*	*1,2*	*SR 3.3.4.1.4* *SR 3.3.4.1.7*	~~*NA*~~
11. ATWS-ARI Trip Initiation Function of the RFC.	*3*	*1,2*	*SR 3.3.4.1.4*	~~*NA*~~
12. ATWS-FMCRD Initiation Function of the RCIS.	*2*	*1,2*	*SR 3.3.4.1.4*	~~*NA*~~
13. FMCRD Insertion Confirmatory Logic.	*1*	*1,2*	*SR 3.3.4.1.4*	
14. ATWS-ARI Valve Actuation.	*3*	*1,2*	*SR 3.3.4.1.4*	~~*NA*~~
15. FMCRD Emergency Insertion Invertor Control Logic.	*1 per rod*	*1,2*	*SR 3.3.4.1.4*	~~*NA*~~
16. Recirculation Runback.	*1 per pump*	*1,2*	*SR 3.3.4.1.4*	~~*NA*~~

~~*(a) ≤ [0] seconds for RIPs [A, D, F, J, B, E, & H] and ≤ [6] seconds for RIPs [C, G, & K].*~~

[This page intentionally left blank]

3.3 INSTRUMENTATION

3.3.4.2 Feedwater Pump and Main Turbine Trip Instrumentation

The information in this section of the reference ABWR DCD, including all subsections, is incorporated by reference with the following departure and site-specific supplements. The site-specific supplements partially address COL License Information Item 16.1.

STD DEP 16.3-97
STD DEP 16.3-100

LCO 3.3.4.2 *Three channels of feedwater pump and main turbine trip instrumentation shall be OPERABLE.*

ACTIONS

CONDITION	*REQUIRED ACTION*	*COMPLETION TIME*
A. One feedwater pump and main turbine trip channel inoperable.	*A.1 Place channel in trip.*	*6 hours*
	OR	
	A.2.1 Place channel in bypass.	*6 hours*
	AND	
	A.2.2.1 Restore channel to OPERABLE status.	*14 days*
	OR	
	A.2.2.2 Place channel in trip.	*14 days*
B. Two or more feedwater pump and main turbine trip channels inoperable.	*B.1 Restore two channels to OPERABLE status.*	*72 hours*

SURVEILLANCE REQUIREMENTS

SURVEILLANCE		*FREQUENCY*
SR 3.3.4.2.1	*Perform SENSOR CHANNEL CHECK.*	*24 hours*
STD DEP 16.3-100 *SR 3.3.4.2.2*	*Perform CHANNEL FUNCTIONAL TEST* in accordance with TS 5.5.2.11, Setpoint Control Program.	*[~~92~~ 31] days*
STD DEP 16.3-100 *SR 3.3.4.2.3*	*Perform SENSOR CHANNEL CALIBRATION* in accordance with TS 5.5.2.11, Setpoint Control Program. ~~*The allowable value shall be ≤ [ ] inches.*~~	*18 months*
SR 3.3.4.2.4	*Perform LOGIC SYSTEM FUNCTIONAL TEST including [~~valve~~] actuation.*	*18 months*

3.3 INSTRUMENTATION

3.3.5.1 Control Rod Block Instrumentation

The information in this section of the reference ABWR DCD, including all subsections, is incorporated by reference with the following departures and site-specific supplements. The site specific supplements partially address COL License Information Item 16.1.

LCO 3.3.5.1 *The control rod block instrumentation for each Function in Table 3.3.5.1-1 shall be OPERABLE.*

APPLICABILITY: *According to Table 3.3.5.1-1.*

STD DEP 16.3-64
STD DEP 16.3-65

ACTIONS

CONDITION	*REQUIRED ACTION*	*COMPLETION TIME*
A. One Automated Thermal Limit Monitor (ATLM) channel inoperable.	*A.1 Restore channel to OPERABLE status.*	*[72] hours*
	OR	
	A.2 Verify the thermal limits are met.	*4 hours* *AND* *Once per 4 hours thereafter*
STD DEP 16.3-64 *B. Two ATLM channels inoperable.*	*----------NOTE----------* *Removal of ATLM block under administrative control is permitted provided manual control of rod movement and thermal limits are verified by a second licensed operator.* *----------* *B.1 Insert an ATLM block.* *AND*	 *Immediately*

(continued)

ACTIONS (continued)

CONDITION	*REQUIRED ACTION*		*COMPLETION TIME*
(continued)	*B.2*	*Verify RCIS blocks control rod movement by attempting to withdraw one rod or one gang ~~or~~ of rods.*	*4 hours* *AND* *Once per 4 hours thereafter*
C. One Rod Worth Minimizer (RWM) channel inoperable.	*C.1*	*Restore channel to OPERABLE status.*	*~~[~~72~~]~~ Hours*
D. Two RWM channels inoperable *OR* *Required Actions and associated Completion Time of Condition C not met.*	*D.1*	*Suspend control rod movement, except by scram.*	*Immediately*
E. One or more Reactor Mode Switch– Shutdown Position channels inoperable.	*E.1*	*Suspend control rod withdrawal.*	*Immediately*
	AND		
	E.2	*Initiate action to fully insert all insertable control rods in core cells containing one or more fuel assemblies.*	*Immediately*

SURVEILLANCE REQUIREMENTS

----------NOTE----------
Refer to Table 3.3.5.1-1 to determine which SRs apply for each Control Rod Block Function.

SURVEILLANCE		*FREQUENCY*
STD DEP 16.3-65		
SR 3.3.5.1.1	----------NOTE---------- *Not required to be performed until 1 hour after THERMAL POWER is > [~~10~~ 30]% RTP.* --- *Perform CHANNEL FUNCTIONAL TEST.*	*[~~92~~ 31] days*
SR 3.3.5.1.2	----------NOTE---------- *Not required to be performed until 1 hour after any control rod is withdrawn in MODE 2* --- *Perform CHANNEL FUNCTIONAL TEST.*	*[~~92~~ 31] days*
SR 3.3.5.1.3	*Verify the RWM is not bypassed when THERMAL POWER is ≤ [~~10~~] % RTP.*	*18 months*
SR 3.3.5.1.4	*Verify the ATLM is not bypassed when THERMAL POWER is ≥ [~~30~~] % RTP.*	*18 months*
SR 3.3.5.1.5	----------NOTE---------- *Not required to be performed until 1 hour after reactor mode switch is in the shutdown position.* --- *Perform CHANNEL FUNCTIONAL TEST.*	*18 months*
SR 3.3.5.1.6	*Perform CHANNEL CHECK of process parameter and setpoint inputs to the ATLM.*	*[~~24~~] hours*
SR 3.3.5.1.7	*Verify the bypassing and movement of control rods required to be bypassed in the Rod Action and Position Information (RAPI) Subsystem by a second licensed operator or other qualified member of the technical staff.*	*Prior to and during movement of control rods bypassed in the RAPI Subsystem*

Table 3.3.5.1-1 (page 1 of 1)
Control Rod Block Instrumentation

FUNCTION	APPLICABLE MODES OR OTHER SPECIFIED CONDITIONS	REQUIRED CHANNELS	SURVEILLANCE REQUIREMENTS
1. Rod Control & Information System			
a. Automated Thermal Limit Monitor	[(a)]	2	SR 3.3.5.1.1 SR 3.3.5.1.4 SR 3.3.5.1.6
b. Rod Worth Minimizer	1[(b)], 2[(b)]	2	SR 3.3.5.1.2 SR 3.3.5.1.3
2. Reactor Mode Switch–Shutdown Position	(c)	4	SR 3.3.5.1.5

(a) THERMAL POWER > [30] % RTP.

(b) With THERMAL POWER ≤ [10] % RTP.

(c) Reactor mode switch in the shutdown position.

3.3 INSTRUMENTATION

3.3.6.1 Post Accident Monitoring (PAM) Instrumentation

The information in this section of the reference ABWR DCD, including all subsections, is incorporated by reference with the following departures and site-specific supplements. The site specific supplements partially address COL License Information Item 16.1.

STD DEP T1 2.3-1
STD DEP T1 2.14-1
STD DEP 7.5-1
STD DEP 16.3-78

STD DEP T1 2.14-1

ACTIONS

CONDITION	*REQUIRED ACTION*	*COMPLETION TIME*
C. One or more Functions with two required channels inoperable.	----------NOTE---------- ~~*This Action is not applicable to Functions 11 and 12.*~~ ---------- *C.1 Restore at least one inoperable channel to OPERABLE status.*	*7 days*
~~*D. Two required hydrogen/oxygen monitor channels inoperable*~~	~~*D.1 Restore one required hydrogen/oxygen monitor channel to OPERABLE status*~~	~~*72 hours*~~
D. ~~E.~~ Required Action and associated Completion Time of Condition C not met	*D.1 ~~E.1~~ Enter the Condition referenced in Table 3.3.6.1-1 for the channel.*	*Immediately*

CONDITION	REQUIRED ACTION	COMPLETION TIME
E. ~~F.~~ As required by Required Action ~~E~~D.1 and referenced in Table 3.3.6.1-1.	E.1 ~~F.1~~ Be in MODE 3.	12 hours
F. ~~G.~~ As required by Required Action ~~E~~D.1 and referenced in Table 3.3.6.1-1.	F.1 ~~G.1~~ Provide alternate method of monitoring, determine the cause of the inoperability, and submit plans and schedule for restoring the instrumentation channels of the Functions to OPERABLE status to the NRC.	14 days

SURVEILLANCE REQUIREMENTS

----------NOTES----------
1. These SRs apply to each Function in Table 3.3.6.1-1.

2. SR 3.3.6.1.1 does not apply to Function 8.

SURVEILLANCE		FREQUENCY
SR 3.3.6.1.1	Perform CHANNEL CHECK.	~~[~~31~~]~~ days
	----------NOTE---------- Neutron detectors are excluded. ----------	
SR 3.3.6.1.2	Perform CHANNEL CALIBRATION.	18 months

STD DEP T1 2.14-1
STD DEP T1 2.3-1
STD DEP 7.5-1
STD DEP 16.3-78

Table 3.3.6.1-1 (page 1 of 1)
Post Accident Monitoring Instrumentation

	FUNCTION	REQUIRED CHANNELS	CONDITIONS REFERENCED FROM REQUIRED ACTION E.1
1.	Reactor Steam Dome Pressure.	2	~~F~~E
2.	Reactor Vessel Water Level - Wide Range.	2	~~F~~E
3.	Reactor Vessel Water Level - Fuel Zone.	2	~~F~~E
4.	Suppression Pool Water Level.	2	~~F~~E
5.	Containment Pressure.		
	5a. Drywell Pressure.	2	~~F~~E
	5b. ~~*Wide Range Containment*~~ Wetwell Pressure.	2	~~F~~E
6.	Drywell Area Radiation.	2	~~G~~F
7.	Wetwell Area Radiation.	2	~~G~~F
8.	PCIV Position.	2 per penetration flow path [(a),(b)]	~~F~~E
9.	Startup Range Neutron Monitor - Neutron Flux.	2[(c)]	~~F~~E
10.	Average Power Range Monitor - Neutron Flux.	2[(d)]	~~F~~E
~~*11.*~~	~~*Containment Atmospheric Monitors - Drywell H_2 & O_2 Analyzer.*~~	~~*2*~~	~~*F*~~
~~*12.*~~	~~*Containment Atmospheric Monitors - Wetwell H_2 & O_2 Analyzer.*~~	~~*2*~~	~~*F*~~
~~*13.*~~	~~*Containment Water Level.*~~	~~*2*~~	~~*F*~~
11.	~~*14.*~~ Suppression Pool Water Temperature.	2[(e)]	~~F~~E
12.	~~*15.*~~ Drywell Atmosphere Temperature.	2	~~F~~E
~~*16.*~~	~~*Main Steam Line Radiation.*~~	~~*2*~~	~~*F*~~
13.	Wetwell Atmosphere Temperature.	2	E

a. Only one position indication channel is required for penetration flow paths with only one installed control room indication channel.

b. Not required for isolation valves whose associated penetration flow path is isolated by at least one closed and de-activated automatic valve, closed manual valve, blind flange, or check valve with flow through the valve secured.

c. When power is ≤ [10] % RTP

d. When power is > [10] % RTP

e. Bulk average temperature.

3.3 INSTRUMENTATION

3.3.6.2 Remote Shutdown System

The information in this section of the reference ABWR DCD, including all subsections, is incorporated by reference with the following departures and site-specific supplements. The site specific supplements partially address COL License Information Item 16.1.

STD DEP T1 2.14-1
STD DEP 16.3-59
STD DEP 16.3-60

SURVEILLANCE REQUIREMENTS

SURVEILLANCE		*FREQUENCY*
SR 3.3.6.2.1	*Perform CHANNEL CHECK for each required instrumentation channel.*	*~~[~~31~~]~~ days*
SR 3.3.6.2.2	*Verify each required control circuit and transfer switch is capable of performing the intended functions.*	*18 months*
SR 3.3.6.2.3	*Perform CHANNEL CALIBRATION for each required instrumentation channel.*	*18 months*

Table 3.3.6.2-1 (Page 1 of 2)
Remote Shutdown System Instrumentation

	FUNCTION (INSTRUMENT OR CONTROL PARAMETER)	*REQUIRED NUMBER OF DIVISIONS*
1.	*Reactor Steam Dome Pressure.*	*2*
2.	*HPCF B Flow.*	*1*
3.	*HPCF B Controls.*	*1(c)*
4.	*HPCF B Pump Discharge Pressure.*	*1*
5.	*RHR Flow.*	*2(a)*
6.	*RHR Hx Inlet Temperature.*	*2(a)*
7.	*RHR Hx Outlet Temperature.*	*2(a)*
8.	*RHR Hx Bypass Valve Position.*	*2(a)*
9.	*RHR Hx Outlet Valve Position.*	*2(a)*
10.	*RHR Pump Discharge Pressure.*	*2(a)*
11.	*RHR Controls.*	*2(a)(c)*

Table 3.3.6.2-1 (Page 2 of 2)
Remote Shutdown System Instrumentation

FUNCTION (INSTRUMENT OR CONTROL PARAMETER)	*REQUIRED NUMBER OF DIVISIONS*
	(continued)
12. RPV Wide Range Water Level.	*2*
STD DEP 16.3-59	
13. RPV ~~Narrow~~ Shutdown *Range Water Level.*	*2*
14. Reactor Building Cooling Water Flow.	*2*
15. Reactor Building Cooling Water Controls.	*2(c)*
16. Reactor Building Service Water System Controls.	*2(c)*
STD DEP T1 2.14-1 STD DEP 16.3-60	
17. ~~Cooling Water Flow to Flammability Control System~~ RSW Strainer Differential Pressure.	*~~1~~2*
18. Suppression Pool Water Level.	*2*
19. Condensate Storage Tank Water Level.	*1*
20. Suppression Pool Temperature.	*2*
21. Electric Power Distribution Controls .	*2(c)*
22. Diesel Generator Interlock and Monitors.	*2*
23. SRV Controls.	*(b)(c)*

a. RHR A for division I RSS panel, RHR B for division II RSS panel.
b. Three on the Division I RSS, 1 on division II RSS.
c. The specified number of channels are required t o be OPERABLE for each device that can be controlled from the RSS panels.

3.3 INSTRUMENTATION

3.3.7.1 Control Room Habitability Area (CRHA) Emergency Filtration (EF) System Instrumentation

The information in this section of the reference ABWR DCD, including all subsections, is incorporated by reference with the following departures and site-specific supplements. These site specific supplements partially address COL License Information Item 16.1.

STD DEP 16.3-61
STD DEP 16.3-100

SURVEILLANCE REQUIREMENTS

----------NOTE----------
Refer to Table 3.3.7.1-1 to determine which SRs apply for each Function.

SURVEILLANCE		*FREQUENCY*
SR 3.3.7.1.1	*Perform CHANNEL CHECK.*	*[~~24~~ 12] hours*
STD DEP 16.3-100 *SR 3.3.7.1.2*	*Perform CHANNEL FUNCTIONAL TEST* in accordance with TS 5.5.2.11, Setpoint Control Program.	*[~~92~~ 31] days*
STD DEP 16.3-100 *SR 3.3.7.1.3*	*Perform CHANNEL CALIBRATION* in accordance with TS 5.5.2.11, Setpoint Control Program.	*18 months*
SR 3.3.7.1.4	*Perform LOGIC SYSTEM FUNCTIONAL TEST.*	*18 months*

Table 3.3.7.1-1 (Page 1 of 1)

Control Room Habitability Area - Emergency Filtration System Instrumentation

FUNCTION	*REQUIRED CHANNELS*	*SURVEILLANCE REQUIREMENTS*	STD DEP 16.3-100 ~~*ALLOWABLE VALUE*~~
1. Control Room Ventilation Radiation Monitors	*4 per EF division*	*SR 3.3.7.1.1* *SR 3.3.7.1.2* *SR 3.3.7.1.3* *SR 3.3.7.1.4*	~~*≤ [(a)] mGy/h*~~
2. Emergency Filtration System Low Flow	*2 per EF division*	*SR 3.3.7.1.2* *SR 3.3.7.1.3* *SR 3.3.7.1.4*	~~*≤ [(a)] kg/h*~~
3. Emergency Filtration System Manual Switch	*1 per EF division*	*SR 3.3.7.1.2* *SR 3.3.7.1.4*	~~*N/A*~~

STD DEP 16.3-61

~~*(a) During operations with a potential for draining the reactor vessel.*~~

~~*(b) During movement of irradiated fuel assemblies in the secondary containment.*~~

3.3 INSTRUMENTATION

3.3.8.1 Electric Power Monitoring

The information in this section of the reference ABWR DCD, including all subsections, is incorporated by reference with the following departures and site-specific supplements. These site specific supplements partially address COL License Information Item 16.1.

STD DEP 16.3-97
STD DEP 16.3-100

SURVEILLANCE REQUIREMENTS

SURVEILLANCE		*FREQUENCY*
STD DEP 16.3-100 *SR 3.3.8.1.1*	*Perform CHANNEL FUNCTIONAL TEST* in accordance with TS 5.5.2.11, Setpoint Control Program.	*~~[92~~* 31*~~]~~ days*
STD DEP 16.3-97 STD DEP 16.3-100 *SR 3.3.8.1.2*	*Perform CHANNEL CALIBRATION* in accordance with TS 5.5.2.11, Setpoint Control Program. *~~The Allowable Values for Divisions I, II, III and IV shall be:~~* *~~a. Undervoltage: ≤ [108] VAC.~~* *~~b. Overvoltage: ≥ [132] VAC.~~* *~~c. Underfrequency: ≤ [57] Hz.~~* *~~d. Overfrequency: ≥ [63] Hz.~~*	*~~[92~~* 18*~~] days~~* months
SR 3.3.8.1.3	*Perform SYSTEM FUNCTIONAL TEST.*	*18 months*

[This page intentionally left blank]

3.3 INSTRUMENTATION

3.3.8.2 Reactor Coolant Temperature Monitoring - Shutdown

The information in this section of the reference ABWR DCD, including all subsections, is incorporated by reference with no departures, but the following site-specific supplements. These site specific supplements partially address COL License Information Item 16.1.

SURVEILLANCE REQUIREMENTS

SURVEILLANCE		*FREQUENCY*
SR 3.3.8.2.1	*Perform CHANNEL CHECK.*	*~~[7]~~ days*
SR 3.3.8.2.2	*Perform CHANNEL FUNCTIONAL TEST.*	*~~[92~~ 31~~]~~ days*
SR 3.3.8.2.3	*Perform CHANNEL CALIBRATION.*	*18 months*

[This page intentionally left blank]

3.4 REACTOR COOLANT SYSTEM (RCS)

3.4.1 Reactor Internal Pumps (RIPs) - Operating

The information in this section of the reference ABWR DCD, including all subsections, is incorporated by reference with the following departures and site-specific supplements. These site specific supplements partially address COL License Information Item 16.1.

STD DEP 16.3-5
STD DEP 16.3-96

STD DEP 16.3-96

LCO 3.4.1 *At least nine RIPS shall be in operation.*

~~*[OR*~~

~~*[ ] RIPs may be in operation provided the following limits are applied when the associated LC0 is applicable:*~~

~~*a. LC0 3.2.1, "AVERAGE PLANAR LINEAR HEAT GENERATION RATE (APLHGR)," limits specified in the COLR for [ ] RIPs in operation; and*~~
~~*b. LC0 3.2.2, "Minimum CRITICAL POWER RATIO (MCPR)," limits specified in the COLR for [ ] RIPs in operation; and*~~
~~*c. LC0 3.3.1.1, "SSLC Sensor Instrumentation," Function 2.b (Average Power Range Monitors Flow Biased Simulated Thermal Power - High), Allowable Value of Table 3.3.1.1-1 is reset for operation with [ ] RIPs.]*~~

APPLICABILITY: *MODES 1 and 2.*

STD DEP 16.3-5

SURVEILLANCE REQUIREMENTS

SURVEILLANCE		*FREQUENCY*
SR 3.4.1.1	*Verify at least the required number of RIPs ~~are~~ is ~~OPERABLE~~ operating at any THERMAL POWER level.*	*24 hours*

[This page intentionally left blank]

3.4 REACTOR COOLANT SYSTEM (RCS)

3.4.2 Safety/Relief Valves (S/RVs)

The information in this section of the reference ABWR DCD, including all subsections, is incorporated by reference with no departures or supplements.

[This page intentionally left blank]

3.4 REACTOR COOLANT SYSTEM (RCS)

3.4.3 RCS Operational LEAKAGE

The information in this section of the reference ABWR DCD, including all subsections, is incorporated by reference with the following departure.

STD DEP 7.3-12

LCO 3.4.3 *RCS operational LEAKAGE shall be limited to:*

a. No pressure boundary LEAKAGE;

b. *≤ ~~3.785~~* 19 *L/min unidentified LEAKAGE;*

c. *≤ ~~98.4~~* 114 *L/min total LEAKAGE averaged over the previous 24 hour period; and*

3.4 REACTOR COOLANT SYSTEM (RCS)

3.4.4 RCS Pressure Isolation Valve (PIV) Leakage

The information in this section of the reference ABWR DCD, including all subsections, is incorporated by reference with no departures or supplements.

[This page intentionally left blank]

3.4 REACTOR COOLANT SYSTEM (RCS)

3.4.5 RCS Leakage Detection Instrumentation

The information in this section of the reference ABWR DCD, including all subsections, is incorporated by reference with no departures or supplements.

[This page intentionally left blank]

3.4 REACTOR COOLANT SYSTEM (RCS)

3.4.6 RCS Specific Activity

The information in this section of the reference ABWR DCD, including all subsections, is incorporated by reference with no departures or supplements.

[This page intentionally left blank]

3.4 REACTOR COOLANT SYSTEM (RCS)

3.4.7 Residual Heat Removal (RHR) Shutdown Cooling System – Hot Shutdown

The information in this section of the reference ABWR DCD, including all subsections, is incorporated by reference with no departures or supplements.

[This page intentionally left blank]

3.4 REACTOR COOLANT SYSTEM (RCS)

3.4.8 Residual Heat Removal (RHR) Shutdown Cooling System – Cold Shutdown

The information in this section of the reference ABWR DCD, including all subsections, is incorporated by reference with no departures or supplements.

[This page intentionally left blank]

3.4 REACTOR COOLANT SYSTEM (RCS)

3.4.9 RCS Pressure and Temperature (P/T) Limits

The information in this section of the reference ABWR DCD, including all subsections, is incorporated by reference with no departures and the following site-specific supplements. The site-specific supplements partially address COL License Information Item 16.1.

SURVEILLANCE REQUIREMENTS

SURVEILLANCE		*FREQUENCY*
SR 3.4.9.4	----------NOTE---------- *Not required to be performed until 30 minutes after RCS temperature ≤ [27°C] in MODE 4.* ---------- *Verify reactor vessel flange and head flange temperatures are within the limits specified in the PTLR.*	*30 minutes*
SR 3.4.9.5	----------NOTE---------- *Not required to be performed until 12 hours after RCS temperature ≤ [38°C] in MODE 4.* ---------- *Verify reactor vessel flange and head flange temperatures are within the limits specified in the PTLR.*	*12 hours*

[This page intentionally left blank]

3.4 REACTOR COOLANT SYSTEM (RCS)

3.4.10 Reactor Steam Dome Pressure

The information in this section of the reference ABWR DCD, including all subsections, is incorporated by reference with no departures or supplements.

[This page intentionally left blank]

3.5 EMERGENCY CORE COOLING SYSTEMS (ECCS)

3.5.1 ECCS – Operating

The information in this section of the reference ABWR DCD, including all subsections, is incorporated by reference with the following departure.

STD DEP 8.3-1

ACTIONS

CONDITION	*REQUIRED ACTION*		*COMPLETION TIME*
B. RCIC inoperable. *OR* *RCIC and any one other ECCS subsystem inoperable.*	B.1.1	*Verify the CTG is functional by verifying the CTG starts and achieves steady state voltage and frequency ~~within 2~~ in less than 10 minutes.* *AND*	*7 days*
	B.1.2	*Verify the CTG circuit breakers are capable of being aligned to each of the ESF buses*	*7 days* *AND* *Once per 8 hours thereafter*
	OR		
	B.2	*Verify the ACIWA mode of RHR(C) subsystem is functional.*	*7 days*
	AND		
	B.3	*Restore ECCS subsystem(s) to OPERABLE status.*	*14 days*

ACTIONS (continued)

CONDITION	*REQUIRED ACTION*	*COMPLETION TIME*
C. RCIC and any other two ECCS subsystems inoperable provided at least one HPCF subsystem is OPERABLE.	*C.1.1.1 Verify the CTG is functional by verifying the CTG starts and achieves steady state voltage and frequency ~~within 2~~* in less than 10 minutes.	*72 hours*
	AND	
	C.1.1.2 Verify the CTG circuit breakers are capable of being aligned to each of the ESF buses.	*72 hours* *AND* *Once per 8 hours thereafter*
	OR	
	C.1.2 Verify the ACIWA mode of RHR(C) subsystem is functional.	*72 hours*
	AND	
	C.2 Restore one ECCS subsystem to OPERABLE status.	*7 days*

3.5 EMERGENCY CORE COOLING SYSTEMS (ECCS)

3.5.2 ECCS – Shutdown

The information in this section of the reference ABWR DCD, including all subsections, is incorporated by reference with the following departure and site-specific supplement. The site-specific supplement partially addresses COL License Information Item 16.1.

STD DEP 16.3-97

SURVEILLANCE REQUIREMENTS (continued)

SURVEILLANCE		*FREQUENCY*
SR 3.5.2.2	*Verify, for the required High Pressure Core Flooder (HPCF) subsystem, the:* *a. Suppression pool water level is ≥ 7.0 m, or* *b. Condensate storage tank water level is ≥ ~~[~~ 5.4 ~~m]~~ m.*	*12 hours*
SR 3.5.2.3	*Verify, for each required ECCS subsystem, the piping is filled with water from the pump discharge valve to the injection valve.*	*31 days*
SR 3.5.2.4	*----------NOTE----------* *Low Pressure Core Flooder (LPFL) subsystem may be considered OPERABLE during alignment and operation in the decay heat removal shutdown cooling mode, if capable of being manually realigned and not otherwise inoperable.* *----------* *Verify each required ECCS subsystem manual, power operated, and automatic valve in the flow path, that is not locked, sealed, or otherwise secured in position, is in the correct position.*	 *31 days*

(continued)

[This page intentionally left blank]

3.6 CONTAINMENT SYSTEMS

3.6.1.1 Primary Containment

The information in this section of the reference ABWR DCD, including all subsections, is incorporated by reference with no departures or supplements.

[This page intentionally left blank]

3.6 CONTAINMENT SYSTEMS

3.6.1.2 Primary Containment Air Locks

The information in this section of the reference ABWR DCD, including all subsections, is incorporated by reference with the following departure and site-specific supplement. The site-specific supplement partially addresses COL License Information Item 16.1.

STD DEP 16.3-69

CONDITION	*REQUIRED ACTION*	*COMPLETION TIME*
B. One or more primary containment air locks with primary containment air lock interlock mechanism inoperable.	----------NOTE---------- *1. Required Actions B.1, B.2, and B.3 are not applicable if both doors in the same air lock are inoperable and Condition C is entered.* *2. Entry into and exit from containment is permissible under the control of a dedicated individual.* ---------- *B.1 Verify an OPERABLE door is closed in the affected air lock(s).* *AND* *B.2 Lock an OPERABLE door closed in the affected air lock(s).* *AND*	 *1 hour* *24 hours*

CONDITION	REQUIRED ACTION	COMPLETION TIME
B. (Continued)	B.3 ----------NOTE---------- Air lock doors in high radiation areas or areas with limited access due to inerting may be verified locked closed by administrative means. ----------	
	Verify an OPERABLE door is locked closed in the affected air lock(s).	Once per 31 days

SURVEILLANCE REQUIREMENTS

SURVEILLANCE		FREQUENCY
SR 3.6.1.2.1	----------NOTES---------- 1. An inoperable air lock door does not invalidate the previous successful performance of the overall air lock leakage test 2. Results shall be evaluated against acceptance criteria of SR 3.6.1.1.1 in accordance with 10 CFR 50, Appendix J, as modified by approved exemptions. ----------	
	Perform required primary containment air lock leakage rate testing in accordance with 10 CFR 50, Appendix J, as modified by approved exemptions. The acceptance criteria for air lock testing are: a. Overall air lock leakage rate is $\leq 0.05\ L_a$ when tested at $\geq P_a$. b. For each door, leakage rate is $\leq 0.01\ L_a$ when the gap between the door seals is pressurized to $\geq$ [0.0689] MPaG for at least 15 minutes.	----------NOTE---------- SR 3.0.2 is not applicable ---------- In accordance with 10 CFR 50, Appendix J, as modified by approved exemptions

3.6 CONTAINMENT SYSTEMS

3.6.1.3 Primary Containment Isolation Valves (PCIVs)

The information in this section of the reference ABWR DCD, including all subsections, is incorporated by reference with no departures and the following site-specific supplements. The site-specific supplements partially address COL License Information Item 16.1.

ACTIONS

CONDITION	*REQUIRED ACTION*		*COMPLETION TIME*
D. One or more penetration flow paths with one or more containment purge valves not within purge valve leakage limits.	*D.1*	*Isolate the affected penetration flow path by use of at least one ~~[~~closed and deactivated automatic valve, closed manual valve, or blind flange~~]~~.*	*24 hours*
	AND		
	D.2	*----------NOTE---------- Valves and blind flanges in high radiation areas may be verified by use of administrative means. ---------- Verify the affected penetration flow path is isolated.*	*Once per 31 days for isolation devices outside containment* *AND* *Prior to entering MODE 4 from MODE 5 if not performed within the previous 92 days for isolation devices inside containment*
	AND		
	D.3	*Perform SR 3.6.1.3.7 for the resilient seal purge valves closed to comply with Required Action D.1.*	*Once per ~~[~~92~~]~~ days*

SURVEILLANCE REQUIREMENTS

SURVEILLANCE		FREQUENCY
SR 3.6.1.3.7	*----------NOTES----------* *1. Only required to be met in MODES 1, 2, and 3.* *2. Results shall be evaluated against acceptance criteria of SR 3.6.1.1.1 in accordance with 10 CFR 50, Appendix J, as modified by approved exemptions.* *----------* *Perform leakage rate testing for each primary containment purge valve with resilient seals*	*184 days* *AND* *Once within 92 days after opening the valve*
~~*SR 3.6.1.3.14*~~	~~*----------NOTE----------*~~ ~~*Only required to be met in MODES 1, 2, and 3.*~~ ~~*----------*~~ ~~*Verify each [550 mm] primary containment purge valve is blocked to restrict the valve from opening > [50]%.*~~	~~*18 months*~~

3.6 CONTAINMENT SYSTEMS

3.6.1.4 Drywell Pressure

The information in this section of the reference ABWR DCD, including all subsections, is incorporated by reference with no departures or supplements.

[This page intentionally left blank]

3.6 CONTAINMENT SYSTEMS

3.6.1.5 Drywell Air Temperature

The information in this section of the reference ABWR DCD, including all subsections, is incorporated by reference with no departures or supplements.

[This page intentionally left blank]

3.6 CONTAINMENT SYSTEMS

3.6.1.6 Wetwell-to-Drywell Vacuum Breakers

The information in this section of the reference ABWR DCD, including all subsections, is incorporated by reference with no departures or supplements.

[This page intentionally left blank]

3.6 CONTAINMENT SYSTEMS

3.6.2.1 Suppression Pool Average Temperature

The information in this section of the reference ABWR DCD, including all subsections, is incorporated by reference with the following departure.

STD DEP 16.3-32

ACTIONS

CONDITION	*REQUIRED ACTION*		*COMPLETION TIME*
D. *Suppression pool average temperature > 43.3°C~~ but ≤ 48.9°C~~.*	D.1	*~~Verify~~ Determine suppression pool average temperature~~ is ≤ 48.9°C~~.*	*Once per 30 minutes*
	AND		
	D.2	Be in MODE 4.	36 hours
E. *Suppression pool average temperature > 48.9°C.*	*E.1*	*Depressurize the reactor vessel to < 1.38 MPaG.*	*12 hours*
	~~AND~~		
	~~E.2~~	*~~Be in MODE 4.~~*	*~~36 hours~~*

[This page intentionally left blank]

3.6 CONTAINMENT SYSTEMS

3.6.2.2 Suppression Pool Water Level

The information in this section of the reference ABWR DCD, including all subsections, is incorporated by reference with no departures or supplements.

[This page intentionally left blank]

3.6 CONTAINMENT SYSTEMS

3.6.2.3 Residual Heat Removal (RHR) Suppression Pool Cooling

The information in this section of the reference ABWR DCD, including all subsections, is incorporated by reference with no departures or supplements.

[This page intentionally left blank]

3.6 CONTAINMENT SYSTEMS

3.6.2.4 Residual Heat Removal (RHR) Containment Spray

The information in this section of the reference ABWR DCD, including all subsections, is incorporated by reference with no departures or supplements.

[This page intentionally left blank]

3.6 CONTAINMENT SYSTEMS

3.6.3.1 Primary Containment Hydrogen Recombiners

The information in this section of the reference ABWR DCD, including all subsections, is deleted in accordance with the following departure.

STD DEP T1 2.14-1

Not Used.

[This page intentionally left blank]

3.6 CONTAINMENT SYSTEMS

3.6.3.2 Primary Containment Oxygen Concentration

The information in this section of the reference ABWR DCD, including all subsections, is incorporated by reference with no departures or supplements.

[This page intentionally left blank]

3.6 CONTAINMENT SYSTEMS

3.6.4.1 Secondary Containment

The information in this section of the reference ABWR DCD, including all subsections, is incorporated by reference with the following departure.

STD DEP 16.3-29

SURVEILLANCE REQUIREMENTS

SURVEILLANCE		*FREQUENCY*
SR 3.6.4.1.4	*Verify each standby gas treatment (SGT) subsystem will draw down the secondary containment to ≥ 6.4 mm water gauge vacuum in ≤ ~~120 seconds~~* 20 minutes*.*	*18 months on a STAGGERED TEST BASIS*

[This page intentionally left blank]

3.6 CONTAINMENT SYSTEMS

3.6.4.2 Secondary Containment Isolation Valves (SCIVs)

The information in this section of the reference ABWR DCD, including all subsections, is incorporated by reference with no departures or supplements.

[This page intentionally left blank]

3.6 CONTAINMENT SYSTEMS

3.6.4.3 Standby Gas Treatment (SGT) System

The information in this section of the reference ABWR DCD, including all subsections, is incorporated by reference with no departures or supplements.

[This page intentionally left blank]

3.7 PLANT SYSTEMS

3.7.1 Reactor Building Cooling Water (RCW) System, Reactor Service Water (RSW) System and Ultimate Heat Sink (UHS) – Operating

The information in this section of the reference ABWR DCD, including all subsections, is incorporated by reference with the following departure and site-specific supplements. The site-specific supplements partially address COL License Information Item 16.1.

STD DEP 16.3-16

ACTIONS

CONDITION	*REQUIRED ACTION*		*COMPLETION TIME*
A. One RCW pump and/or one RSW pump and/or one RCW/RSW heat exchanger and/or one ~~[spray network]~~ cooling tower cell in the UHS inoperable in a single division.	*A.1*	*Restore pump(s) and/or heat exchanger and/or UHS ~~[spray network]~~ cooling tower cell to OPERABLE status.*	*14 days*
B. One RCW/RSW division inoperable for reasons other than Condition A. *OR* *Both ~~[spray networks]~~ cooling tower cells in one UHS division inoperable.*	*B.1*	*Declare associated supported required feature(s) inoperable and enter applicable Conditions and Required Actions of the LCOs for the inoperable required feature(s).*	*Immediately*
	AND		
	B.2	*Initiate action to restore RCW/RSW division or both UHS ~~[spray networks]~~ cooling tower cells to OPERABLE status.*	*Immediately*

ACTIONS (continued)

CONDITION	*REQUIRED ACTION*	*COMPLETION TIME*
C. Condition A exists in two or more RCW/RSW or UHS ~~spray networks~~ cooling tower divisions.	*C.1 Restore one inoperable RCW/RSW or UHS ~~spray networks~~ cooling tower division to OPERABLE status.* STD DEP 16.3-16 ~~*AND*~~ ~~*C.2 Restore two inoperable RCW/RSW or UHS [spray network] divisions to OPERABLE status.*~~	*7 days* ~~*14 days*~~
D. Required Action and associated Completion Time of Condition A, B or C not met. *OR* *Two or more RCW/RSW divisions inoperable for reasons other than Condition C.* *OR* *UHS inoperable.* *OR* *Two or more UHS ~~[spray network]~~ cooling tower divisions inoperable for reasons other than Condition C.*	*D.1 Be in MODE 3.* *AND* *D.2 Be in MODE 4.*	*12 hours* *36 hours*

SURVEILLANCE REQUIREMENTS

SURVEILLANCE		*FREQUENCY*
SR 3.7.1.1	*Verify the water level ~~of~~* in *~~each~~* the *UHS ~~[spray pond]~~* basin *is ≥ ~~[~~* 19.28 *~~]13.56~~* m *~~(MSL)~~.*	*24 hours*
SR 3.7.1.2	*Verify the water level in ~~each RSW pump well of~~ the ~~intake structure~~* UHS basin *is ≥ ~~[~~* 0.91 *~~]~~ m.*	*24 hours*
SR 3.7.1.3	*Verify the RSW water temperature at the inlet to the RCW/RSW heat exchangers is ≤ ~~[33.3~~* 32.2*~~]~~ °C.*	*24 hours*
SR 3.7.1.4	Operate each cooling tower cell fan for ≥ 15 minutes.	31 days
SR 3.7.1.~~4~~5	----------NOTE---------- *Isolation of flow to individual components does not render RCW/RSW System inoperable.* ---------- *Verify each RCW/RSW division and associated UHS ~~[spray network]~~* cooling tower *division manual, power operated, and automatic valve in the flow path servicing safety related systems or components, that is not locked, sealed, or otherwise secured in position, is in the correct position.*	*31 days*
SR 3.7.1.~~5~~6	*Verify each RCW/RSW division and associated UHS ~~[spray network]~~* cooling tower *division actuate on an actual or simulated initiation signal.*	*18 months*

[This page intentionally left blank]

3.7 PLANT SYSTEMS

3.7.2 Reactor Building Cooling Water (RCW) System, Reactor Service Water (RSW) System and Ultimate Heat Sink (UHS) - Shutdown

The information in this section of the reference ABWR DCD, including all subsections, is incorporated by reference with the following departures and site-specific supplements. The site-specific supplements partially address COL License Information Item 16.1.

STD DEP 16.3-16
STD DEP 16.3-46

LCO 3.7.2 *Three RCW/RSW divisions and UHS shall be OPERABLE.*

----------NOTE----------
One RCW/RSW division may be inoperable in MODE 5, and after 30 hours from initial entry into MODE 4 from MODE 3.

STD DEP 16.3-46

APPLICABILITY: *MODE 4,*
MODE 5 ~~except~~ with irradiated fuel in the reactor pressure vessel (RPV) *~~the reactor cavity to dryer/separator storage pool gate removed~~ and water level ~~≥~~ < 7.0 m over the top of the reactor pressure vessel flange.*

ACTIONS

CONDITION	*REQUIRED ACTION*	*COMPLETION TIME*
A. One RCW pump and/or one RSW pump and/or one RCW/RSW heat exchanger and/or one ~~[spray network]~~ cooling tower cell in the UHS in one required division inoperable.	*A.1 Restore pump(s) and/or heat exchanger and/or UHS ~~[spray network]~~ cooling tower cell to OPERABLE status.*	*14 days*
B. Condition A exists in two or more required RCW/RSW or UHS ~~[spray network]~~ cooling tower divisions.	*B.1 Restore one inoperable RCW/RSW or UHS ~~[spray network]~~ cooling tower division to OPERABLE status.* STD DEP 16.3-16 ~~*AND*~~ ~~*B.2 Restore two inoperable RCW/RSW or UHS [spray network] divisions to OPERABLE status.*~~	*7 days* ~~*14 days*~~

ACTIONS (continued)

CONDITION	REQUIRED ACTION	COMPLETION TIME
C. One or more required RCW/RSW ~~*division*~~ or UHS ~~*[spray network]*~~ cooling tower divisions inoperable for reasons other then Condition A or B. OR UHS inoperable. OR Required Action and associated Completion Time of Condition A or B not met.	C.1 Enter applicable Conditions and Required Actions of LCO 3.8.11, “AC Sources – Shutdown (Low Water Level)” for diesel generator(s) made inoperable by RCW/RSW. AND C.2 Enter applicable Conditions and Required Actions of LCO 3.4.8, “Residual Heat Removal (RHR) – MODE 4,” or LCO 3.9.8, “RHR – Low Water Level”, for RHR shutdown cooling made inoperable by RCW/RSW.	Immediately Immediately

SURVEILLANCE REQUIREMENTS

SURVEILLANCE		FREQUENCY
SR 3.7.2.1	*Verify the water level* in ~~*of each*~~ the *UHS* ~~*[spray pond]*~~ basin *is ≥* ~~*[*~~ 19.28 ~~*]13.56*~~ m~~*(MSL)*~~*.*	*24 hours*
SR 3.7.2.2	*Verify the water level in* ~~*each RSW pump well of*~~ *the* ~~*intake structure*~~ UHS basin *is ≥* ~~*[*~~ 0.91 ~~*]*~~ *m.*	*24 hours*
SR 3.7.2.3	*Verify the RSW water temperature at the inlet to the RCW/RSW heat exchangers is ≤* ~~*[33.3*~~ 32.2~~*]*~~ *°C.*	*24 hours*
SR 3.7.2.4	Operate each cooling tower cell fan for ≥ 15 minutes.	31 days
SR 3.7.2.~~*4*~~5	*----------NOTE----------* *Isolation of flow to individual components does not render RCW/RSW System inoperable.* *----------* *Verify each RCW/RSW division and associated UHS* ~~*[spray network]*~~ cooling tower *division manual, power operated, and automatic valve in the flow path servicing safety related systems or components, that is not locked, sealed, or otherwise secured in position, is in the correct position.*	*31 days*
SR 3.7.2.~~*5*~~6	*Verify each RCW/RSW division and associated UHS* ~~*[spray network*~~ cooling tower~~*]*~~ *division actuates on an actual or simulated initiation signal.*	*18 months*

3.7 PLANT SYSTEMS

3.7.3 Reactor Building Cooling Water (RCW) System and Reactor Service Water (RSW) System and Ultimate Heat Sink (UHS) – Refueling

The information in this section of the reference ABWR DCD, including all subsections, is incorporated by reference with the following departures and site-specific supplements. The site-specific supplements partially address COL License Information Item 16.1.

STD DEP 16.3-16
STD DEP 16.3-46

LCO 3.7.3 *One RCW/RSW division and UHS shall be OPERABLE.*

APPLICABILITY: *MODE 5 with ~~the reactor cavity to dryer/separator storage pool gate removed~~* irradiated fuel in the reactor pressure vessel *and water level ≥ 7.0 m over the top of the reactor pressure vessel flange.*

ACTIONS

CONDITION	*REQUIRED ACTION*	*COMPLETION TIME*
A. No RCW/RSW division OPERABLE. *OR* *UHS inoperable.* *OR* *Associated divisional UHS ~~[spray networks]~~* cooling towers *inoperable.*	*A.1* *Enter applicable Conditions and Required Actions of LCO 3.8.2, "AC Sources-Refueling" for the diesel generator made inoperable by RCW/RSW.* *AND* *A.2* *Enter applicable Conditions and Required Actions of LCO 3.9.7, "RHR-High Water Level", for RHR-Shutdown Cooling made inoperable by RCW/RSW.*	*Immediately* *Immediately*

SURVEILLANCE REQUIREMENTS

SURVEILLANCE		FREQUENCY
SR 3.7.3.1	*Verify the water level* in ~~*of each*~~ the *UHS* ~~*[spray pond]*~~ basin *is ≥* ~~*[*~~ 19.28 ~~*]13.56*~~ *m*~~*(MSL)*~~*.*	*24 hours*
SR 3.7.3.2	*Verify the water level in* ~~*each RSW pump well of*~~ *the* ~~*intake structure*~~ UHS basin *is ≥* ~~*[*~~ 0.91 ~~*]*~~ *m.*	*24 hours*
SR 3.7.3.3	*Verify the RSW water temperature at the inlet to the RCW/RSW heat exchangers is ≤* ~~*[33.3*~~ 32.2~~*]*~~ *°C.*	*24 hours*
SR 3.7.3.4	Operate each cooling tower cell fan for ≥ 15 minutes.	31 days
SR 3.7.3.~~*4*~~5	*----------NOTE----------* *Isolation of flow to individual components does not render RCW/RSW System inoperable.* *----------* *Verify each RCW/RSW division and associated UHS* ~~*[spray network*~~ cooling tower~~*]*~~ *division manual, power operated, and automatic valve in the flow path servicing safety related systems or components, that is not locked, sealed, or otherwise secured in position, is in the correct position.*	*31 days*
SR 3.7.3.~~*5*~~6	*Verify each RCW/RSW division and associated UHS* ~~*[spray network*~~ cooling tower~~*]*~~ *division actuates on an actual or simulated initiation signal.*	*18 months*

3.7 PLANT SYSTEMS

3.7.4 Control Room Habitability Area (CRHA) – Emergency Filtration (EF) System

The information in this section of the reference ABWR DCD, including all subsections, is incorporated by reference with the following departure.

STD DEP 16.3-47

SURVEILLANCE REQUIREMENTS (continued)

SURVEILLANCE		*FREQUENCY*
SR 3.7.4.4	*Verify each EF division can maintain a positive pressure of ≥ 3.2 mm water gauge relative to the atmosphere during the isolation mode of operation at a flow rate of ≤ ~~360~~ 3400 m^3/h.*	*18 months on a STAGGERED TEST BASIS*

[This page intentionally left blank]

3.7 PLANT SYSTEM

3.7.5 Control Room Habitability Area (CRHA) – Air Conditioning (AC) System

The information in this section of the reference ABWR DCD, including all subsections, is incorporated by reference with no departures or supplements.

[This page intentionally left blank]

3.7 PLANT SYSTEMS

3.7.6 Main Condenser Offgas

The information in this section of the reference ABWR DCD, including all subsections, is incorporated by reference with no departures or supplements.

[This page intentionally left blank]

3.7 PLANT SYSTEMS

3.7.7 Main Turbine Bypass System

The information in this section of the reference ABWR DCD, including all subsections, is incorporated by reference with no departures or supplements.

[This page intentionally left blank]

3.7 PLANT SYSTEMS

3.7.8 Fuel Pool Water Level

The information in this section of the reference ABWR DCD, including all subsections, is incorporated by reference with no departures or supplements.

[This page intentionally left blank]

3.8 ELECTRICAL POWER SYSTEMS

3.8.1 AC Sources – Operating

The information in this section of the reference ABWR DCD, including all subsections, is incorporated by reference with the following departures and site specific supplements. The site specific supplements partially address COL License Information Item 16.1.

STD DEP 8.3-1
STD DEP 16.3-49
STD DEP 16.3-103

STD DEP 8.3-1
ACTIONS

CONDITION	*REQUIRED ACTION*		*COMPLETION TIME*
A. One of two offsite AC power sources to one ESF bus inoperable.	*A.1*	*Verify affected ESF bus is powered from the other operable offsite AC circuit.*	*72 hours* *AND* *Once per 8 hours thereafter*
	AND		
	A.2	*Verify the CTG is functional by verifying the CTG starts and achieves steady state voltage and frequency ~~within 2~~ in less than 10 minutes.*	*72 hours* *AND* *Once per 7 days thereafter*
	AND		
	A.3	*Verify the CTG circuit breakers are aligned to the affected ESF bus.*	*72 hours* *AND* *Once per 8 hours thereafter*
	AND		
	A.4	*Restore inoperable offsite AC power to affected ESF bus.*	*30 days*

ACTIONS (continued)

CONDITION	*REQUIRED ACTION*		*COMPLETION TIME*
B. One required offsite circuit inoperable.	*B.1*	*Perform SR 3.8.1.1 for OPERABLE required offsite circuit.*	*1 hour* *AND* *Once per 8 hours thereafter*
	AND		
	B.2	*Declare required feature(s) with no power available from an OPERABLE offsite circuit inoperable when the redundant required feature(s) are inoperable.*	*24 hours from discovery of no power available from an OPERABLE offsite circuit to one division concurrent with inoperability of redundant required feature(s)*
	AND		
	B.3	*Verify the combustion turbine generator (CTG) is functional by verifying the CTG starts and achieves steady state voltage and frequency ~~within 2~~ in less than 10 minutes.*	*72 hours*
	AND		
	B.4	*Verify the CTG circuit breakers are capable of being aligned to each of ESF buses.*	*72 hours* *AND* *Once per 8 hours thereafter*
	AND		

ACTIONS (continued)

CONDITION	*REQUIRED ACTION*		*COMPLETION TIME*
B. (continued)	*B.5*	*Restore required offsite circuit to OPERABLE status.*	*14 days* *AND* *1 day from discovery of two divisions with no power available from an OPERABLE offsite circuit* *AND* *15 days from discovery of failure to meet the LCO*
C. ----------NOTE---------- Required Action C.3.1 or C.3.2 shall be completed if this Condition is entered. ---------- *One required DG inoperable.*	*C.1*	*Perform SR 3.8.1.1 for OPERABLE required offsite circuit(s).*	*1 hour* *AND* *Once per 8 hours thereafter*
	AND		
	C.2	*Declare required feature(s), supported by the inoperable DG, inoperable when the redundant required features(s) are inoperable.*	*4 hours from discovery of Condition C concurrent with inoperability of redundant required feature(s)*
	AND		
	C.3.1	*Determine OPERABLE DG(s) are not inoperable due to common cause failure.*	*24 hours*
	OR		

ACTIONS (continued)

CONDITION	*REQUIRED ACTION*		*COMPLETION TIME*
C . (continued)	*C.3.2*	*Perform SR 3.8.1.2 for OPERABLE DG(s).*	*24 hours*
	AND		
	C.4	*Verify the combustion turbine generator (CTG) is functional by verifying the CTG starts and achieves steady state voltage and frequency ~~within 2~~ in less than 10 minutes.*	*72 hours*
	AND		
	C.5	*Verify the CTG circuit breakers are aligned to the ESF bus associated with the inoperable DG.*	*72 hours* *AND* *Once per 8 hours thereafter*
	AND		
	C.6	*Restore required DG to OPERABLE status.*	*14 days* *AND* *15 days from discovery of failure to meet the LCO*
D. Two required offsite circuits inoperable.	*D.1*	*Declare required feature(s) inoperable when the redundant required feature(s) are inoperable.*	*12 hours from discovery of Condition D concurrent with inoperability of redundant required feature(s)*
	AND		

ACTIONS (continued)

CONDITION	*REQUIRED ACTION*	*COMPLETION TIME*
	D.2 *Restore one required offsite circuit to OPERABLE status.*	*24 hours*
E. One required offsite circuit inoperable. *AND* *One required DG inoperable.*	----------NOTE---------- *Enter applicable Conditions and Required Actions of LCO 3.8.9, "Distribution Systems - Operating," when Condition D is entered with no required AC power source to one division.* ---------- *E.1* *Verify the combustion turbine generator (CTG) is functional by verifying the CTG starts and achieves steady state voltage and frequency ~~within 2~~ in less than 10 minutes.* *AND* *E.2* *Verify the CTG circuit breakers are aligned to the ESF bus associated with the inoperable DG.* *AND* *E.3.1* *Restore required offsite circuit to OPERABLE status.* *OR* *E.3.2* *Restore required DG to OPERABLE status.*	 *12 hours* *12 hours* *AND* *Once per 8 hours thereafter* *72 hours* *72 hours*

ACTIONS (continued)

CONDITION	*REQUIRED ACTION*	*COMPLETION TIME*
F. Two required DGs inoperable.	*F.1 Verify the combustion turbine generator (CTG) is functional by verifying the CTG starts and achieves steady state voltage and frequency ~~within 2~~ in less than 10 minutes.*	*2 hours*
	AND	
	F.2 Verify the CTG circuit breakers are aligned to one ESF bus associated with an inoperable DG and capable of being aligned to the other ESF bus associated with an inoperable DG.	*2 hours* *AND* *Once per 8 hours thereafter*
	AND	
	F.3 Restore one required DG to OPERABLE status.	*72 hours*

STD DEP 8.3-1

SURVEILLANCE REQUIREMENTS

SURVEILLANCE		*FREQUENCY*
SR 3.8.1.2	*----------NOTES----------* *1. Performance of SR 3.8.1.7 satisfies this SR.* *2. All DG starts may be preceded by an engine prelube period and followed by a warmup period prior to loading.* *3. A modified DG start involving idling and gradual acceleration to synchronous speed may be used for this SR as recommended by the manufacturer. When modified start procedures are not used, the time, voltage, and frequency tolerances of SR 3.8.1.7 must be met.* *----------* *Verify each DG starts from standby conditions and achieves steady state voltage ≥ [3744] V and ≤ [4576] V and frequency ≥ [58.8] Hz and ≤ [61.2] Hz.*	*As specified in Table 3.8.1-1*
SR 3.8.1.3	*----------NOTES----------* *1. DG loadings may include gradual loading as recommended by the manufacturer.* *2. Momentary transients outside the load range do not invalidate this test.* *3. This Surveillance shall be conducted on only one DG at a time.* *4. This SR shall be preceded by, and immediately follow, without shutdown, a successful performance of SR 3.8.1.2 or SR 3.8.1.7.* *----------* *Verify each DG is synchronized and loaded and operates for ≥ 60 minutes at a load ≥ [6480] kW and ≤ [7200] kW.*	*As specified in Table 3.8.1-1*
SR 3.8.1.4	*Verify each day tank contains ≥ [16,900] liters of fuel oil.*	*31 days*

SURVEILLANCE REQUIREMENTS (continued)

SURVEILLANCE		*FREQUENCY*
SR 3.8.1.7	----------NOTE---------- All DG starts may be preceded by an engine prelube period. ---------- *Verify each DG starts from standby condition and achieves, in ≤ 20 seconds, voltage ≥ [3744] V and ≤ [4576] V and frequency ≥ [58.8] Hz and ≤ [61.2] Hz.*	*184 days*
SR 3.8.1.8	*----------NOTES----------* *1. This Surveillance shall not be performed in MODE 1 or 2.* *2. Credit may be taken for unplanned events that satisfy this SR.* *----------* *Verify manual transfer of the [unit power supply] from the normal offsite circuit to each required alternate offsite circuit.*	*18 months*

SURVEILLANCE REQUIREMENTS (continued)

SURVEILLANCE		*FREQUENCY*
SR 3.8.1.9	*----------NOTES----------* *1. This Surveillance shall not be performed in MODE 1 or 2.* *2. Credit may be taken for unplanned events that satisfy this SR.* *----------* *Verify each DG operating at a power factor ≤ 0.9 rejects a load ≥ 589 kW for Division 1 and ≥ 1689 kW for Divisions 2 and 3, and:* a. *Following load rejection, the frequency is ≤ [66.7] Hz;* b. *Within 3 seconds following load rejection, the voltage is ≥ [3744] V and ≤ [4576] V; and* c. *Within 3 seconds following load rejection, the frequency is ≥ 58.8 Hz and ≤ 61.2 Hz.*	*18 months*
SR 3.8.1.10	*----------NOTES----------* *1. This Surveillance shall not be performed in MODE 1 or 2.* *2. Credit may be taken for unplanned events that satisfy this SR.* *----------* *Verify each DG operating at a power factor ≤ 0.9 does not trip and voltage is maintained ≤ [4784] V during and following a load rejection of a load ≥ [6480] kW and ≤ [7200] kW.*	*18 months*

SURVEILLANCE REQUIREMENTS (continued)

SURVEILLANCE		*FREQUENCY*
SR 3.8.1.11	*----------NOTES----------* *1. All DG starts may be preceded by an engine prelube period.* *2. This Surveillance shall not be performed in MODE 1, 2, or 3.* *3. Credit may be taken for unplanned events that satisfy this SR.* *----------* *Verify on an actual or simulated loss of offsite power signal:* *a. De-energization of emergency buses;* *b. Load shedding from emergency buses; and* *c. DG auto-starts from standby condition and:* *1. energizes permanently connected loads in ≤ 20 seconds,* *2. sequentially energizes auto-connected shutdown loads,* *3. maintains steady state voltage ≥ [3744] V and ≤ [4576] V,* *4. maintains steady state frequency ≥ [58.8] Hz and ≤ [61.2] Hz, and* *5. supplies permanently connected and auto-connected shutdown loads for ≥ 5 minutes.*	 *18 months*

SURVEILLANCE REQUIREMENTS (continued)

SURVEILLANCE		*FREQUENCY*
SR 3.8.1.12	*----------NOTES----------* *1. All DG starts may be preceded by an engine prelube period.* *2. This Surveillance shall not be performed in MODE 1 or 2.* *3. Credit may be taken for unplanned events that satisfy this SR.* *----------* *Verify on an actual or simulated Emergency Core Cooling System (ECCS) initiation signal each DG auto-starts from standby condition and:* a. *In ≤ 20 seconds after auto-start and during tests, achieves voltage ≥ [3744] V and ≤ [4576] V;* b. *In ≤ 20 seconds after auto-start and during tests, achieves frequency ≥ [58.8] Hz and ≤ [61.2] Hz;* c. *Operates for ≥ 5 minutes;* d. *Permanently connected loads remain energized from the offsite power system; and* e. *Emergency loads are sequentially energized from the offsite power system.*	*18 months*

SURVEILLANCE REQUIREMENTS (continued)

SURVEILLANCE		*FREQUENCY*
SR 3.8.1.14	*----------NOTES----------* *1. Momentary transients outside the load and power factor ranges do not invalidate this test.* *2. This Surveillance shall not be performed in MODE 1 or 2.* *3. Credit may be taken for unplanned events that satisfy this SR.* *----------* *Verify each DG operating at a power factor ≤ 0.9, operates for ≥ 24 hours:* a. *For ≥ 2 hours loaded, ≥ 7560 kW and ≤ 7920 kW; and* b. *For the remaining hours of the test loaded ≥ 6480 kW and ≤ [7200 kW].*	*18 months*
STD DEP 16.3-103 *SR 3.8.1.15*	*----------NOTES----------* *1. This Surveillance shall be performed within 5 minutes of shutting down the DG after the DG has operated ≥ 2 hours loaded ≥ 6480 kW and ≤ 7200 kW.* *Momentary transients outside of load range do not invalidate this test.* *2. All DG starts may be preceded by an engine prelube period.* *----------* *Verify each DG starts and achieves, in ≤ 20 seconds, voltage ≥ [3744] V and ≤ [4576] V and frequency ≥ [58.8] Hz and ≤ [61.2] Hz.*	*18 months*

SURVEILLANCE REQUIREMENTS (continued)

SURVEILLANCE		*FREQUENCY*
SR 3.8.1.19	*----------NOTES----------* *1. All DG starts may be preceded by an engine prelube period.* *2. This Surveillance shall not be performed in MODE 1, 2, or 3.* *3. Credit may be taken for unplanned events that satisfy this SR.* *----------* *Verify, on an actual or simulated loss of offsite power signal in conjunction with an actual or simulated ECCS initiation signal:* *a. De-energization of emergency buses;* *b. Load shedding from emergency buses; and* *c. DG auto-starts from standby condition and:* 1. *energizes permanently connected loads in ≤ 20 seconds,* 2. *sequentially energizes auto-connected emergency loads,* 3. *achieves steady state voltage ≥ [3744] V and ≤ [4576] V,* 4. *achieves steady state frequency ≥ [58.8] Hz and ≤ [61.2] Hz, and* 5. *supplies permanently connected and auto-connected emergency loads for ≥ 5 minutes.*	*18 months*

SURVEILLANCE REQUIREMENTS (continued)

SURVEILLANCE		*FREQUENCY*
SR 3.8.1.20	----------NOTE---------- *All DG starts may be preceded by an engine prelube period.* ---------- *Verify, when started simultaneously from standby condition, each Division 1, 2, and 3 DG achieves, in ≤ 20 seconds, voltage ≥ [3744] V and ≤ [4576] V and frequency ≥ [58.8] Hz and ≤ [61.2] Hz.*	*10 years during shutdown*

STD DEP 16.3-49

Table 3.8.1-1 (page 1 of 1)
Diesel Generator Test Schedule

(b) This test frequency shall be maintained until seven consecutive failure free starts from standby conditions and load and run tests have been performed. ~~This is consistent with Regulatory Position [ ], of Regulatory Guide 1.9, Revision 3.~~ If, subsequent to the 7 failure free tests, 1 or more additional failures occur such that there are again 4 or more failures in the last 25 tests, the testing interval shall again be reduced as noted above and maintained until 7 consecutive failure free tests have been performed.

3.8 ELECTRICAL POWER SYSTEMS

3.8.2 AC Sources – Refueling

The information in this section of the reference ABWR DCD, including all subsections, is incorporated by reference with the following departure.

STD DEP 16.3-41

ACTIONS

CONDITION	*REQUIRED ACTION*	*COMPLETION TIME*
A. Required offsite circuit inoperable.	----------NOTE---------- *Enter applicable Condition and Required Actions of LCO 3.8.10, with one required division de-energized as a result of Condition ~~B~~A.* ----------	

[This page intentionally left blank]

3.8 ELECTRICAL POWER SYSTEMS

3.8.3 Diesel Fuel Oil, Lube Oil, and Starting Air

The information in this section of the reference ABWR DCD, including all subsections, is incorporated by reference with the following departure and site-specific supplements. The site specific supplements partially address COL License Information Item 16.1.

STD DEP 16.3-51

ACTIONS

CONDITION	*REQUIRED ACTION*	*COMPLETION TIME*
A. One or more DGs with fuel oil level < [380,000] liters and ≥ [350,000] liters in storage tank.	*A.1 Restore fuel oil level to within limits.*	*48 hours*
B. One or more DGs with lube oil inventory < [7,300] liters and ≥ [6,700] liters.	*B.1 Restore lube oil inventory to within limits.*	*48 hours*
E. One or more DGs with pressure in at least one starting air receiver ~~pressure~~ < [3,000] kPaG and ≥ [2,700] kPaG.	E.1 *Restore starting air receiver pressure to ≥ [3,000] kPaG.*	*48 hours*

SURVEILLANCE REQUIREMENTS

SURVEILLANCE		*FREQUENCY*
SR 3.8.3.1	*Verify each fuel oil storage tank contains ≥[380,000] liters.*	*31 days*
SR 3.8.3.2	*Verify lube oil inventory for each DG is ≥[7,300] liters.*	*31 days*
SR 3.8.3.4	*Verify each required DG air start receiver pressure is ≥[3,000] kPaG.*	*31 days*

3.8 ELECTRICAL POWER SYSTEMS

3.8.4 DC Sources – Operating

The information in this section of the reference ABWR DCD, including all subsections, is incorporated by reference with the following departure and site-specific supplements. The site specific supplements partially address COL License Information Item 16.1.

STD DEP 8.3-1

ACTIONS

CONDITION	*REQUIRED ACTION*		*COMPLETION TIME*
A. One DC electrical power subsystem (either Division I, II, or III) inoperable.	*A.1*	*Determine OPERABLE DC electrical subsystems are not inoperable due to common cause failure.*	*2 hours*
	AND		
	A.2	*Declare affected required features inoperable.*	*2 hours*
	AND		
	A.3	*Verify the combustion turbine generator (CTG) is functional by verifying the CTG starts and achieves steady state voltage and frequency ~~within 2~~in less than 10 minutes.*	*12 hours*
	AND		
	A.4	*Verify the CTG circuit breakers are capable of being aligned to the two unaffected ESF buses.*	*12 hours* *AND* *Once per 8 hours thereafter*
	AND		

ACTIONS (continued)

CONDITION	*REQUIRED ACTION*	*COMPLETION TIME*
A. (continued)	*A.5 Restore inoperable DC electrical power subsystem to OPERABLE status.*	*72 hours*

SURVEILLANCE REQUIREMENTS

SURVEILLANCE		*FREQUENCY*
SR 3.8.4.1	*Verify battery terminal voltage is ≥[130] V on float charge.*	*7 days*
SR 3.8.4.2	*Verify no visible corrosion at terminals and connectors.* *OR* *Verify connection resistance is* *≤[20% above the resistance as measured during installation of the battery] ohms for inter-cell connections,* *≤[20% above the resistance as measured during installation of the battery] ohms for inter-rack connections,* *≤[20% above the resistance as measured during installation of the battery] ohms for inter-tier connections, and* *≤[20% above the resistance as measured during installation of the battery] ohms for terminal connections.*	*92 days*

SURVEILLANCE REQUIREMENTS

SURVEILLANCE		*FREQUENCY*
SR 3.8.4.5	*Verify connection resistance is* *≤[* 20% above the resistance as measured during installation of the battery *] ohms for inter-cell connections,* *≤[* 20% above the resistance as measured during installation of the battery *] ohms for inter-rack connections,* *≤[* 20% above the resistance as measured during installation of the battery *] ohms for inter-tier connections, and* *≤[* 20% above the resistance as measured during installation of the battery *] ohms for terminal connections.*	*12 months*
SR 3.8.4.6	*----------NOTES----------* *1. This Surveillance shall not be performed in MODE 1, 2, or 3.* *2. Credit may be taken for unplanned events that satisfy this SR.* *----------* *Verify each required battery charger supplies ≥ [* 600 *] amps at ≥ 125 V for ≥ 12 hours.*	*18 months*

[This page intentionally left blank]

3.8 ELECTRICAL POWER SYSTEMS

3.8.5 DC Sources – Shutdown

The information in this section of the reference ABWR DCD, including all subsections, is incorporated by reference with no departures or supplements.

[This page intentionally left blank]

3.8 ELECTRICAL POWER SYSTEMS

3.8.6 Battery Cell Parameters

The information in this section of the reference ABWR DCD, including all subsections, is incorporated by reference with the following departure and site-specific supplements. The site specific supplements partially address COL License Information Item 16.1.

STD DEP 16.3-58

ACTIONS

CONDITION	*REQUIRED ACTION*	*COMPLETION TIME*
A. One or more batteries with one or more battery cell parameters not within Table 3.8.6-1 Category A or B *limits.*	*A.1 Verify pilot cells electrolyte level and float voltage meet Table 3.8.6-1 Category C limits.*	*1 hour*

SURVEILLANCE REQUIREMENTS

SURVEILLANCE		*FREQUENCY*
SR 3.8.6.2	*Verify battery cell parameters meet Table 3.8.6-1 Category B limits.*	*92 days* *AND* *Once within 24 hours after battery discharge < [110] V* *AND* *Once within 24 hours after battery overcharge > [140] V*

Table 3.8.6-1 (page 1 of 1)
Battery Cell Parameter Requirements

PARAMETER	CATEGORY A: LIMITS FOR EACH DESIGNATED PILOT CELL	CATEGORY B: LIMITS FOR EACH CONNECTED CELL	CATEGORY C: LIMITS FOR EACH CONNECTED CELL
Electrolyte Level	> Minimum level indication mark, and ≤ 6 mm above maximum level indication mark[a]	> Minimum level indication mark, and ≤ 6 mm above maximum level indication mark[a]	Above top of plates, and not overflowing
Float Voltage	≥ 2.13 V	≥ 2.13 V	> 2.07 V
Specific Gravity [b][c]	≥ [1.195]	≥ [1.190] AND Average of all connected cells > [1.200]	Not more than 0.020 below average of all connected cells AND Average of all connected cells ≥ [1.190]

a It is acceptable for the electrolyte level to temporarily increase above the specified maximum level during equalizing charges provided it is not overflowing.

b Corrected for electrolyte temperature and level.

c Or battery charging current is < [2] amps when on float charge. This is acceptable only during a maximum of [7] days following a battery recharge.

3.8 ELECTRICAL POWER SYSTEMS

3.8.7 Inverters – Operating

The information in this section of the reference ABWR DCD, including all subsections, is incorporated by reference with no departures or supplements.

[This page intentionally left blank]

3.8 ELECTRICAL POWER SYSTEMS

3.8.8 Inverters – Shutdown

The information in this section of the reference ABWR DCD, including all subsections, is incorporated by reference with no departures or supplements.

[This page intentionally left blank]

3.8 ELECTRICAL POWER SYSTEMS

3.8.9 Distribution Systems – Operating

The information in this section of the reference ABWR DCD, including all subsections, is incorporated by reference with the following departure.

STD DEP 8.3-1

ACTIONS

CONDITION	*REQUIRED ACTION*		*COMPLETION TIME*
A. One AC electrical power distribution subsystem inoperable.	*A.1*	*Declare affected required features inoperable.*	*2 hours*
	AND		
	A.2	*Verify the combustion turbine generator (CTG) is functional by verifying the CTG starts and achieves steady state voltage and frequency ~~within 2~~*in less than 10 *minutes.*	*12 hours*
	AND		
	A.3	*Verify the CTG circuit breakers are capable of being aligned to the OPERABLE* ESF *buses.*	*12 hours* *AND* *Once per 8 hours thereafter*
	AND		
	A.4	*Restore AC electrical power distribution subsystem to OPERABLE status*	*72 hours* *AND* *7 days from discovery of failure to meet LCO*

ACTIONS (continued)

CONDITION	*REQUIRED ACTION*		*COMPLETION TIME*
D. One DC electrical power distribution subsystem (either Division I, II, or III) inoperable.	*D.1*	*Declare affected required features inoperable.*	*2 hours*
	AND		
	D.2	*Verify the combustion turbine generator (CTG) is functional by verifying the CTG starts and achieves steady state voltage and frequency ~~within 2~~* in less than 10 *minutes.*	*12 hours*
	AND		
	D.3	*Verify the CTG circuit breakers are capable of being aligned to the two unaffected* ESF buses.	*12 hours* *AND* *Once per 8 hours thereafter*
	AND		
	D.4	*Restore DC electrical power distribution subsystems to OPERABLE status.*	*72 hours* *AND* *7 days from discovery of failure to meet LCO*

3.8 ELECTRICAL POWER SYSTEMS

3.8.10 Distribution Systems – Shutdown

The information in this section of the reference ABWR DCD, including all subsections, is incorporated by reference with no departures or supplements.

[This page intentionally left blank]

3.8 ELECTRICAL POWER SYSTEMS

3.8.11 AC Sources – Shutdown (Low Water Level)

The information in this section of the reference ABWR DCD, including all subsections, is incorporated by reference with the following departure.

STD DEP 8.3-1

ACTIONS (continued)

CONDITION	*REQUIRED ACTION*		*COMPLETION TIME*
B. One required DG inoperable.	*B.1*	*Verify the combustion turbine generator (CTG) is functional by verifying the CTG starts and achieves steady state voltage and frequency ~~within 2~~ in less than 10 minutes.*	*1 hour*
	AND		
	B.2	*Verify the CTG circuit breakers are aligned to the* ESF *bus associated with the inoperable required DG.*	*1 hour* *AND* *Once per 8 hours thereafter*
	AND		
	B.3	*Restore required DG to OPERABLE status.*	*14 days*

ACTIONS (continued)

CONDITION	*REQUIRED ACTION*		*COMPLETION TIME*
C. Required Action and Completion Time of Condition B not met. *OR* *Two or more required DGs inoperable.*	*C.1*	*Suspend CORE ALTERATIONS.*	*Immediately*
	AND		
	C.2	*Suspend movement of irradiated fuel assemblies in secondary containment.*	*Immediately*
	AND		
	C.3	*Initiate action to suspend OPDRVs.*	*Immediately*
	AND		
	C.4	*Initiate action to restore required DG(s) to OPERABLE status.*	*Immediately*
	AND		
	C.5	*Declare affected required features supported by the inoperable DG(s) inoperable.*	*8 hours*

3.9 REFUELING OPERATIONS

3.9.1 Refueling Equipment Interlocks

The information in this section of the reference ABWR DCD, including all subsections, is incorporated by reference with the following departure.

STD DEP 16.3-25

LCO 3.9.1 *The refueling equipment interlocks* associated with the reactor mode switch in the refuel position *shall be OPERABLE.*

APPLICABILITY: *During in-vessel fuel movement with equipment associated with the interlocks* when the reactor mode switch is in the refuel position*.*

[This page intentionally left blank]

3.9

3.9 REFUELING OPERATIONS

3.9.2 Refuel Position Rod-Out Interlock

The information in this section of the reference ABWR DCD, including all subsections, is incorporated by reference with no departures or supplements.

[This page intentionally left blank]

3.9 REFUELING OPERATIONS

3.9.3 Control Rod Position

The information in this section of the reference ABWR DCD, including all subsections, is incorporated by reference with no departures or supplements.

[This page intentionally left blank]

3.9 REFUELING OPERATIONS

3.9.4 Control Rod Position Indication

The information in this section of the reference ABWR DCD, including all subsections, is incorporated by reference with no departures or supplements.

[This page intentionally left blank]

3.9 REFUELING OPERATIONS

3.9.5 Control Rod OPERABILITY - Refueling

The information in this section of the reference ABWR DCD, including all subsections, is incorporated by reference with the following departure.

STD DEP 16.3-15

SURVEILLANCE REQUIREMENTS

SURVEILLANCE		*FREQUENCY*
SR 3.9.5.1	*Insert each withdrawn control rod at least one step.*	*7 days*
SR 3.9.5.2	*Verify each withdrawn control rod scram accumulator pressure is ≥ ~~10.49~~ 12.75 MPaG.*	*7 days*

[This page intentionally left blank]

3.9 REFUELING OPERATIONS

3.9.6 Reactor Pressure Vessel (RPV) Water Level

The information in this section of the reference ABWR DCD, including all subsections, is incorporated by reference with no departures or supplements.

[This page intentionally left blank]

3.9 REFUELING OPERATIONS

3.9.7 Residual Heat Removal (RHR) – High Water Level

The information in this section of the reference ABWR DCD, including all subsections, is incorporated by reference with no departures or supplements.

[This page intentionally left blank]

3.9 REFUELING OPERATIONS

3.9.8 Residual Heat Removal (RHR) – Low Water Level

The information in this section of the reference ABWR DCD, including all subsections, is incorporated by reference with no departures or supplements.

[This page intentionally left blank]

3.10 SPECIAL OPERATIONS

3.10.1 Inservice Leak and Hydrostatic Testing Operation

The information in this section of the reference ABWR DCD, including all subsections, is incorporated by reference with no departures or supplements.

[This page intentionally left blank]

3.10 SPECIAL OPERATIONS

3.10.2 Reactor Mode Switch Interlock Testing

The information in this section of the reference ABWR DCD, including all subsections, is incorporated by reference with no departures or supplements.

[This page intentionally left blank]

3.10 SPECIAL OPERATIONS

3.10.3 Control Rod Withdrawal – Hot Shutdown

The information in this section of the reference ABWR DCD, including all subsections, is incorporated by reference with no departures or supplements.

[This page intentionally left blank]

3.10 SPECIAL OPERATIONS

3.10.4 Control Rod Withdrawal – Cold Shutdown

The information in this section of the reference ABWR DCD, including all subsections, is incorporated by reference with the following departure.

STD DEP 16.3-19

LCO 3.10.4 *The reactor mode switch position specified in Table 1.1-1 for MODE 4 may be changed to include the refuel position, and operation considered not to be in MODE 2, to allow withdrawal of a single control rod or control rod pair, and subsequent removal of the associated control rod drives (CRD) if desired, provided the following requirements are met:*

a. All other control rods are fully inserted;

b. 1. LCO 3.9.2, "Refuel Position Rod-Out Interlock," and

LCO 3.9.4, "Control Rod Position Indication,"

<u>OR</u>

2. A control rod withdrawal block is inserted; and

c. 1. LCO 3.3.1.1, "SSLC Sensor Instrumentation," MODE 5 requirements for Functions 1.a, 1.d, 2.a, and 2.d., of Table 3.3.1.1-1,

LCO 3.3.1.2, "RPS and MSIV Trip Actuation," Functions 1.a, 1.b, 3, and 4; and

LCO 3.9.5, "Control Rod OPERABILITY – Refueling,"

<u>OR</u>

2. All control rods<u>, other than the control rod or rod pair being withdrawn,</u> in a five by five array centered on <u>each</u> control rod being withdrawn<u>,</u> are disarmed, and

LCO 3.1.1, "SHUTDOWN MARGIN (SDM)," MODE 5 requirements, except the single control rod or control rod pair to be withdrawn may be assumed to be the highest worth control rod or control rod pair.

[This page intentionally left blank]

3.10 SPECIAL OPERATIONS

3.10.5 Control Rod Drive (CRD) Removal – Refueling

STD DEP 16.3-21

The information in this section of the reference ABWR DCD, including all subsections, is incorporated by reference with the following departure.

LCO 3.10.5 *The requirements of Functions 1.a, 1.b, 1.d, ~~2.a, 2.d~~ and 12 of LCO 3.3.1.1, "SSLC Sensor Instrumentation"; Functions 1.a, 1.b, 3, and 4 of LCO 3.3.1.2, "RPS and MSIV Actuation", LCO 3.3.8.1, "Electric Power Monitoring"; LCO 3.9.1, "Refueling Equipment Interlocks"; LCO 3.9.2, "Refueling Position Rod-Out Interlock"; LCO 3.9.4, "Control Rod Position Indication"; and LCO 3.9.5, "Control Rod OPERABILITY – Refueling," may be suspended in MODE 5 to allow the removal of a single CRD or CRD pair associated with control rod(s) withdrawn from core cell(s) containing one or more fuel assemblies, provided the following requirements are met:*

a. All other control rods are fully inserted;

b. All other control rods in a five by five array centered on the control rod being removed are disarmed;

c. A control rod withdrawal block is inserted;

d. LCO 3.1.1, "SHUTDOWN MARGIN (SDM)," MODE 5 requirements, except the single control rod (or pair) to be withdrawn may be assumed to be the highest worth control rod pair; and

e. No other CORE ALTERATIONS are in progress.

APPLICABILITY: *MODE 5 with LCO 3.9.5 not met.*

[This page intentionally left blank]

3.10 SPECIAL OPERATIONS

3.10.6 Multiple Control Rod Withdrawal – Refueling

The information in this section of the reference ABWR DCD, including all subsections, is incorporated by reference with no departures or supplements.

[This page intentionally left blank]

3.10 SPECIAL OPERATIONS

3.10.7 Control Rod Testing – Operating

The information in this section of the reference ABWR DCD, including all subsections, is incorporated by reference with the following departure.

STD DEP 16.3-4

LCO 3.10.7 *The requirements of LCO 3.1.6, "Rod Pattern Control," may be suspended ~~and control rods bypassed in the Rod Action and Position Information (RAPI) Subsystem as allowed by SR 3.3.5.1.7,~~ to allow performance of SDM demonstrations, control rod scram time testing, control rod friction testing, and the Startup Test Program, provided* LCO 3.3.5.1, "Control Rod Block Instrumentation" for Function 1.b of Table 3.3.5.1-1 is met with the approved control rod sequence or *conformance to the approved control rod sequence for the specified test is verified by a second licensed operator or other qualified member of the technical staff.*

APPLICABILITY: *MODES 1 and 2 with LCO 3.1.6 not met.*

SURVEILLANCE REQUIREMENTS

SURVEILLANCE		*FREQUENCY*
SR 3.10.7.1	----------NOTE---------- Not required to be met if SR 3.10.7.2 is satisfied. ---------- *Verify movement of control rods is in compliance with the approved control rod sequence for the specified test by a second licensed operator or other qualified member of the technical staff.*	*During control rod movement*
SR 3.10.7.2	----------NOTE---------- Not required to be met if SR 3.10.7.1 is satisfied. ---------- Perform the applicable SRs for LCO 3.3.5.1 Function 1.b.	According to the applicable SRs

[This page intentionally left blank]

3.10 SPECIAL OPERATIONS

3.10.8 SHUTDOWN MARGIN (SDM) Test – Refueling

The information in this section of the reference ABWR DCD, including all subsections, is incorporated by reference with the following departure.

STD DEP 16.3-18

ACTIONS

CONDITION	REQUIRED ACTION		COMPLETION TIME
A. One of more of the above requirements not met, for reasons other than Condition B	*A.1*	*Place the reactor mode switch in the shutdown or refuel position.*	*Immediately*
B. One control rod not coupled to its associated CRD.	*B.1*	*Declare the affected control rod inoperable.*	*Immediately*
	AND		
	B.2	Place the reactor mode switch in the shutdown or refuel position.	Immediately

[This page intentionally left blank]

3.10 SPECIAL OPERATIONS

3.10.9 Reactor Internal Pumps (RIPs) – Testing

The information in this section of the reference ABWR DCD, including all subsections, is incorporated by reference with no departures or supplements.

[This page intentionally left blank]

3.10 SPECIAL OPERATIONS

3.10.10 Training Startups

The information in this section of the reference ABWR DCD, including all subsections, is incorporated by reference with no departures or supplements.

[This page intentionally left blank]

3.10 SPECIAL OPERATIONS

3.10.11 Low Power PHYSICS TEST

The information in this section of the reference ABWR DCD, including all subsections, is incorporated by reference with no departures or supplements.

[This page intentionally left blank]

3.10 SPECIAL OPERATIONS

3.10.12 Multiple Control Rod Drive Subassembly Removal – Refueling

The information in this section of the reference ABWR DCD, including all subsections, is incorporated by reference with the following departure.

STD DEP 16.3-17

LCO 3.10.12 *The requirements of LCO 3.9.3, "Control Rod Position"; LCO 3.9.4, "Control Rod Position Indication"; and LCO 3.9.5, "Control Rod OPERABILITY – Refueling," may be suspended, and the "full in" position indicators may be bypassed for any number of control rods in MODE 5, to allow removal of control rod drive subassemblies with the control rods maintained fully inserted by their* applicable *anti-rotation devices, provided the following requirements are met:*

SURVEILLANCE REQUIREMENTS

SURVEILLANCE		*FREQUENCY*
SR 3.10.12.1	*Verify the* applicable *anti-rotation devices associated with each CRD subassembly* ~~*removed*~~ removal *are in the correct position to maintain the control rod fully inserted.*	*24 hours*

[This page intentionally left blank]

B 3.0 LIMITING CONDITION FOR OPERATION (LCOs) AND SURVEILLANCE REQUIREMENTS (SRs)

BASES

The information in this section of the reference ABWR DCD, including all subsections, is incorporated by reference with the following departures.

STD DEP 16.3-1
STD DEP 16.3-2

STD DEP 16.3-1 *LCO 3.0.6*

Specification ~~5.8~~5.6, "Safety Function Determination Program" (SFDP), ensures loss of safety function is detected and appropriate actions are taken. Upon failure to meet two or more LCOs concurrently, an evaluation shall be made to determine if loss of safety function exists. Additionally, other limitations, remedial actions, or compensatory actions may be identified as a result of the support system inoperability and corresponding exception to entering supported system Conditions and Required Actions. The SFDP implements the requirements of LCO 3.0.6.

STD DEP 16.3-2 *SR 3.0.1*

Upon completion of maintenance, appropriate post maintenance testing is required to declare equipment OPERABLE. This includes ensuring applicable Surveillances are not failed and their most recent performance is in accordance with SR 3.0.2. Post maintenance testing may not be possible in the current MODE or other specified conditions in the Applicability due to the necessary unit parameters not having been established. In these situations, the equipment may be considered OPERABLE provided testing has been satisfactorily completed to the extent possible and the equipment is not otherwise believed to be incapable of performing its function. This will allow operation to proceed to a MODE or other specified condition where other necessary post maintenance tests can be completed. Some examples of this process are:

a. Control rod drive maintenance during refueling that requires scram testing at > ~~[5.51~~ 6.55 MPaG.~~]~~ However, if other appropriate testing is satisfactorily completed and the scram time testing of SR 3.1.~~3.4~~ 4.3 is satisfied, the control rod can be considered OPERABLE. This allows startup to proceed to reach ~~[551~~ 6.55 MPaG~~]~~ to perform other necessary testing.

b. ~~High pressure core flooder (HPCF)~~ Reactor core isolation cooling (RCIC) maintenance during shutdown that requires system functional tests at a specified pressure. Provided other appropriate testing is satisfactorily completed, startup can proceed with ~~HPCF~~ RCIC considered OPERABLE. This allows operation to reach the specified pressure to complete the necessary post maintenance testing.

[This page intentionally left blank]

B 3.1 REACTIVITY CONTROL SYSTEMS

B 3.1.1 SHUTDOWN MARGIN (SDM)

BASES

The information in this section of the reference ABWR DCD, including all subsections, is incorporated by reference with the following departure.

STD DEP 16.3-4

SURVEILLANCE REQUIREMENTS

SR 3.1.1.1

The SDM may be demonstrated during an in sequence control rod pair withdrawal, in which the highest worth control rod pair is analytically determined, or during local criticals, where the highest worth control rod pair is determined by testing. Local critical tests require the withdrawal of out of sequence control rods. ~~This testing would therefore require bypassing of the Rod Worth Minimizer to allow the out of sequence withdrawal, and therefore additional requirements must be met (see LCO 3.10.7, "Control Rod Testing – Operating").~~ This testing is performed in accordance with LCO 3.10.7, "Control Rod Testing – Operating" or LCO 3.10.8, "SDM Test – Refueling" where additional requirements are required to be met.

[This page intentionally left blank]

B 3.1 REACTIVITY CONTROL SYSTEMS

B 3.1.2 Reactivity Anomalies

BASES

The information in this section of the reference ABWR DCD, including all subsections, is incorporated by reference with no departures or supplements.

[This page intentionally left blank]

B 3.1 REACTIVITY CONTROL SYSTEMS

B 3.1.3 Control Rod OPERABILITY

BASES

The information in this section of the reference ABWR DCD, including all subsections, is incorporated by reference with no departures, but with the following site-specific supplement. The site specific supplement partially addresses COL License Information Item 16.1.

SURVEILLANCE REQUIREMENTS

SR 3.1.3.4

Verifying the scram time for each control rod to 60% rod insertion position is ≤ [1.44 *] seconds provides reasonable assurance that the control rod will insert when required during a DBA or transient, thereby completing its shutdown function. This SR is performed in conjunction with the control rod scram time testing of SR 3.1.4.1, SR 3.1.4.2, SR 3.1.4.3, and SR 3.1.4.4. SRs in LCO 3.3.1.1, "SSLC Sensor Instrumentation", and LCO 3.3.1.2, "RPS and MSIV Actuation", overlap this Surveillance to provide complete testing of the assumed safety function. The associated Frequencies are acceptable, considering the more frequent testing performed to demonstrate other aspects of control rod OPERABILITY and operating experience, which shows scram times do not significantly change over an operating cycle.*

[This page intentionally left blank]

B 3.1 REACTIVITY CONTROL SYSTEMS

B 3.1.4 Control Rod Scram Times

BASES

The information in this section of the reference ABWR DCD, including all subsections, is incorporated by reference with the following site-specific supplement. The site specific supplement partially addresses COL License Information Item 16.1

~~*Table 3.1.4-1 is modified by two Notes, which state control rods with scram times not within the limits of the Table are considered "slow" and that control rods with scram timesseconds to 60% rod insertion position are considered inoperable as required by SR 3.1.3.4.*~~

LCO

The scram times specified in Table 3.1.4-1 (in the accompanying LCO) are required to ensure that the scram reactivity assumed in the DBA and transient analysis is met. To account for single failure and "slow" scramming control rods, the scram times specified i n Table 3.1.4-1 are faster than those assumed in the design basis analysis. The scram times have a margin to allow up to [~~8.0~~] of the control rods to have scram times that exceed the specified limits (i.e., "slow" control rods) assuming a single stuck control rod (as allowed by LC0 3.1.3, "Control Rod OPERABILITY") and an additional control rod failing to scram per the single failure criterion. The scram times are specified as a function of reactor steam dome pressure to account for the pressure dependence of the scram times. The scram times are specified relative to measurements based on reed switch positions, which provide the control rod position indication. The reed switch closes ("pickup") when the hollow piston passes a specific location and then opens ("dropout") as the hollow piston tube travels upward. Verification of the specified scram times in Table 3.1.4-1 is accomplished through measurement of the "dropout" times.

To ensure that local scram reactivity rates are maintained within acceptable limits, no more than two of the allowed "slow" control rods may occupy adjacent locations.

Table 3.1.4-1 is modified by two Notes, which state control rods with scram times not within the limits of the Table are considered "slow" and that control rods with scram times > [1.44 *] seconds to 60% rod insertion position are considered inoperable as required by SR 3.1.3.4.*

This LC0 applies only to OPERABLE control rods since inoperable control rods will be inserted and disarmed (LC0 3.1.3). Slow scramming control rods may be conservatively declared inoperable and not accounted for as "slow" rods.

[This page intentionally left blank]

B 3.1 REACTIVITY CONTROL SYSTEMS

B 3.1.5 Control Rod Scram Accumulators

BASES

The information in this section of the reference ABWR DCD, including all subsections, is incorporated by reference with no departures or supplements.

[This page intentionally left blank]

B 3.1 REACTIVITY CONTROL SYSTEMS

B 3.1.6 Rod Pattern Control

BASES

The information in this section of the reference ABWR DCD, including all subsections, is incorporated by reference with no departures or supplements.

[This page intentionally left blank]

B 3.1 REACTIVITY CONTROL SYSTEMS

B 3.1.7 Standby Liquid Control (SLC) System

BASES

The information in this section of the reference ABWR DCD, including all subsections, is incorporated by reference with no departures or supplements.

[This page intentionally left blank]

B 3.2 POWER DISTRIBUTION LIMITS

B 3.2.1 AVERAGE PLANAR LINEAR HEAT GENERATION RATE (APLHGR)

BASES

The information in this section of the reference ABWR DCD, including all subsections, is incorporated by reference with no departures or supplements.

[This page intentionally left blank]

B 3.2 POWER DISTRIBUTION LIMITS

B 3.2.2 MINIMUM CRITICAL POWER RATIO (MCPR)

BASES

The information in this section of the reference ABWR DCD, including all subsections, is incorporated by reference with no departures or supplements.

[This page intentionally left blank]

B 3.2 POWER DISTRIBUTION LIMITS

B 3.2.3 LINEAR HEAT GENERATION RATE (LHGR) (Non-GE Fuel)

BASES

The information in this section of the reference ABWR DCD, including all subsections, is deleted in accordance with the following departure.

STD DEP 16.3-95

Not Used.

[This page intentionally left blank]

B 3.3 INSTRUMENTATION

B 3.3.1.1 Safety System Logic and Control (SSLC) Sensor Instrumentation

BASES

The information in this section of the reference ABWR DCD, including all subsections, is incorporated by reference with the following departures and site specific supplements. The site specific supplements partially address COL License Information Item 16.1.

STD DEP T1 2.3-1
STD DEP T1 2.4-2
STD DEP T1 2.4-3
STD DEP T1 3.4-1 (All)
STD DEP 8.3-1
STD DEP 16.3-85
STD DEP 16.3-91
STD DEP 16.3-92
STD DEP 16.3-93
STD DEP 16.3-98
STD DEP 16.3-99
STD DEP 16.3-100
STD DEP 16.3-105

BACKGROUND

The SSLC is comprised of four independent logic divisions (Div. I, II, III, IV). Each logic division provides protective action initiation signals for safety system prime movers associated with their division. Each division is a collection of SENSOR CHANNELS which provide data to the LOGIC CHANNELS in the division. The LOGIC CHANNELS provide initiation signals to the appropriate OUTPUT CHANNELS. The OUTPUT CHANNELS cause actuation of the equipment that implements protective actions. The Functions listed in Table 3.3.1.1-1 have at least one SENSOR CHANNEL in one or more divisions.

SSLC is implemented through the Reactor Trip and Isolation System (RTIS), which supports the reactor protection and main steam isolation functions, and the ESF Logic and Control System (ELCS), which supports the accident mitigation functions. Also included in the SSLC are the safety related portions of the Neutron Monitoring System (NMS), the Radiation Monitoring System (RMS), and the Containment Atmospheric Monitoring System (CAMS). *Each SSLC division has ~~five~~*four *main components:*

- *Digital Trip ~~Module~~ ~~Unit~~*Function *(~~DTM~~~~DTU~~*DTF*). The digital trip ~~module unit~~ function i~~s implemented in a microprocessor based devices that acquires~~acquires data for most process parameters to be monitored in its division and generates a protective action initiation signal within its division if the monitored parameter is outside of specified limits. The protective action initiation signal is also transmitted to other divisions associated with the monitored parameter. Most of the parameters* in the ELCS *are transmitted to the*

BACKGROUND
(continued)

*~~DTM~~DTU*DTF *via the Essential ~~Multiplexing System (EMS) Data~~* Communication Function (ECF) *in its division while* some are received from sub-systems or devices associated with the same division as the *~~DTM~~DTU*DTF. There are *~~three~~* multiple *~~DTMs~~DTUs*DTFs in each division. *~~One~~* Some *~~DTMs~~DTUs*DTFs serve the Reactor Protection System and MSIV closure functions while the others serve the ESF and non-MSIV isolation functions. For the discussions in this LCO the *~~DTMs~~DTUs*DTFs that implement the RPS and MSIV closure functions are referred to as the "RPS/MSIV *~~DTMs~~DTUs*DTFs" and the ones that implement the ESF and non-MSIV closure functions are referred to as the "*~~ESF~~*ELCS *~~DTMs~~DTUs*DTFs".

- *Trip Logic ~~Unit~~*Function *(~~TLU~~*TLF*). The ~~TLU~~*TLF*~~is implemented in a microprocessor based devices that~~ uses the parameter trip information from the RPS/MSIV ~~DTMs~~DTUs*DTFs *in all four divisions to determine if a protective action is required. There is a ~~TLU~~*TLF *in each division. The combinatorial logic used to create protective system actuation commands is performed in the ~~TLU~~*TLF*. Some data used for initiating protective actions are connected directly to the ~~TLUs~~*TLFs*.*

- Digital Logic Controller (DLC) performing the *Safety System Logic ~~Unit (SLU)~~* Function (SLF) of the ELCS*. The ~~SLU~~*DLC of the ELCS *is implemented in microprocessor based devices that use~~s~~ the parameter trip information from the ~~ESF~~*ELCS *~~DTMs~~DTUs*DTFs *in all four divisions to determine if a protective action is required. The combinatorial logic used to create protective system actuation commands is performed in the ~~SLU~~*DLC. ESF logic processing is implemented with either a single channel within each division, redundant channels within each division with two microprocessor channels (i.e., both channels must be initiated for complete actuation of the function), or dual channels within each division with a two-out-of-two vote at the outputs of the DLC, and may be bypassable. *~~The potential for spurious actuation due to failure of an SLU is greatly reduced by employing two SLUs in parallel with a two-out-of-two output confirmation required before component or system actuation is permitted. Some~~*

BACKGROUND (continued)

~~*data used for initiating protective actions are connected directly to the SLUs. There are two sets of dual redundant SLUs in each of three divisions (DIV I, II, & III).*~~

- *Bypass* Interlock Function.~~*Unit (BPU). The BPU provides the bypass and bypass interlock functions. A BPU in each division provides bypass signals to the TLU, SLU and OLU in its division.*~~ *The bypass* ~~*unit contains logic to enforce*~~interlock function enforces *restrictions on bypassing multiple divisions of related Functions.*

~~*Most of the parameters are analog signals that are digitized by the EMS. Each division has one dual redundant EMS that transmits data to the DTMs in the same division.*~~ *The* ~~*DTM*~~*DTU*DTF*processing logic compares* ~~*this*~~digitized analog signal *data against numeric trip setpoints to determine if a protective action is required.*

Typically, a process sensor in each of the four divisions provides a signal ~~*to the EMS*~~ to the ~~*DTMs*~~*DTUs*DTFs *in its division. Exceptions are:*

- *Some parameters are received by the* ~~*DTM*~~*DTU*DTF*as discrete (i.e. 2 state) actuation data signals directly from other systems or devices (e.g. MSIV closure signals, PRRM system).*

- *Some parameters are received by the* ~~*DTM*~~*DTU*ELCS DTF ~~*as analog signals directly from process sensors*~~through the ECF from remote digital logic controllers (RDLCs)~~*(e.g. Turbine 1st stage pressure)*~~*.*

- *Some parameters are received directly by the* ~~*SLU*~~ESF DLC *or* the RTIS ~~*TLU*~~TLF *as discrete (i.e. 2 state) actuation data signals directly from other systems (e.g. NMS signals, CUW, ECCS, manual initiation signals). These parameters are covered by other LCOs, except the NMS parameters are covered by this LCO.*

- *Some parameters are received by the* ~~*SLU*~~ESF DLC *as analog signals directly from process sensors (e.g. RHR pump discharge pressure). These parameters are covered by other LCOs.*

- *Parameters that are used for control of equipment associated with a specific division may use one or two sensors (e.g. ECCS pump pressure interlocks, manual initiation of an ECCS pump). These parameters are covered by other LCOs.*

- *Some parameters may use multiple sensors within a division to provide additional redundancy (e.g. Level 1) or where a distributed parameter is monitored (e.g. Suppression pool temperature).*

- *Some parameters (e.g. SLCS and FWRB initiation on Reactor Vessel Water Level-Low, Level 2) are connected to signal processing electronics that are separate from the normal SSLC processor.* ~~*An Analog Trip Module (ATM) and logic card*~~A separate I/O unit *is provided in each division for these parameters.*

BACKGROUND (continued)

The SSLC hardware and logic is arranged so the system uses two-out-of four coincident initiation logic (i.e. 2 signals for the same parameter must exceed the setpoint before a protective action initiation command is issued). The interdivisional initiation data used in the ~~SLU/TLU~~ ESF DLC / RTIS *~~TLU~~*TLF *logic is transmitted between divisions by isolated fiber optic links from the ~~DTMs~~DTUs*DTFs *or other systems in the redundant divisions.*

There are two basic segments that are used to initiate protective actions. The SENSOR CHANNEL segment consists of the instrumentation portion which encompasses the sensors, sensor data conversion, sensor data transmission path ~~(i.e. EMS ECF), the mechanisms responsible for acquiring data from the EMS ECF,~~ and the setpoint comparison. Capability is provided to manually trip individual SENSOR CHANNELS. Interlocks are provided to prevent placing more than one SENSOR CHANNEL for a given Function in trip at the same time.

*The SENSOR CHANNELS and LOGIC CHANNELS are replicated in ~~four~~ independent and separated divisions of equipment. The sensors ~~and EMS ECF~~ are not considered to be part of the SSLC. However, the sensors and the analog to digital conversion ~~portion of the EMS ECF~~*function *are addressed by this LCO since these devices can effect the results of surveillances required by this LCO.*

*Various bypasses are provided to permit on-line maintenance and calibration. The "division of sensors bypass" disables the ~~DTM DTU~~*DTF*inputs to the associated ~~SLU~~* ESF DLC *and* RTIS *~~TLU~~*TLF *in one division. The direct trip inputs to the ~~SLU~~* ESF DLC *and* RTIS *~~TLU~~*TLF *are not bypassed. Interlocks are provided so only one division of sensors at a time can be placed in bypass. When a division of sensors is bypassed the sensor trip logic in all ~~SLUs~~* ESF DLCs *and* RTIS *~~TLUs~~*TLFs *becomes 2 out of 3 and all of them are capable of providing signals to equipment used to provide protective action. Other bypasses are used to manually or automatically disable selected Functions when they are not required.*

*The RPS/MSIV OUTPUT CHANNEL may be bypassed with the ~~TLU~~*TLF *logic output bypass which disables the trip input to the ~~SLU~~* Output Logic Unit (OLU) *in one logic division. Interlocks are provided so only one division at a time can be placed in ~~TLU~~*TLF *logic output bypass. When a logic division is bypassed the final actuation logic becomes 2/3 for the scram and MSIV closure actions. The sensor trip logic within the unbypassed logic divisions remains as 2/4.*

BACKGROUND (continued)

~~*If one of the redundant SLUs in a division is inoperable it can be bypassed at theassociated OUTPUT CHANNELS, which changes the actuation logic to one-out-of-one in the associated division.*~~ Some ESF logic processing may be bypassed for a redundant channel, which disables the trip output to the OLU altering the logic format from 2/2 to 1/1 for that ESF action. The equipment involved with each of these systems is described in the Bases for LCO 3.3.1.4, "ESF Actuation Instrumentation."

The NMS contains a separate *bypass which causes one of the NMS APRM* sensor *divisions to be bypassed in the NMS logic. The trip logic* ~~*in*~~ for NMS APRM sensor inputs ~~*all four NMS APRM divisions*~~ *then becomes 2/3* ~~*and all divisions will send a trip signal to*~~ in *all four SSLC divisions* ~~*when appropriate*~~*.* ~~*This bypass is therefore transparent to the SSLC.*~~ *Interlocks are provided so only one NMS APRM division* at a time *can be placed in bypass.*

The SSLC includes a variety of self-~~*test*~~diagnostic *and monitoring features.* ~~*The self-test in each microprocessor based device checks the health of the microprocessor, RAM, ROM, communications, and software. Any detected failure that could degrade protective action initiation activates an annunciator and provides fault indication to the board level. Transient failures (e.g. data transmission bit error) are logged to provide maintenance information. Monitoring of the power supplies, card out of file interlocks, and memory batteries (if used) causes an INOP/TRIP in addition to activating an annunciator. If the self-test detects a failure in one of the redundant SLUs within a division, the failed SLU is automatically bypassed (initiation logic becomes one-out-of-one) and an alarm is generated.*~~

~~*Signal validity tests are performed on the data received from the EMS ECF. If a permanent error is detected on a particular parameter the logic state for that parameter will default to a tripped state for the signal and an annunciator or alarm will be activated. Soft (i.e., transient) errors will be logged to provide maintenance information.*~~

STD DEP T1 2.3-1

Reactor Protection System (RPS)

The RPS, as shown in Reference 3, uses four independent divisions each containing sensors, ~~*the EMS ECF, the SSLC*~~ ~~*DTUs*~~DTFs, ~~*TLUs*~~TLFs, *OLUs, load drivers, and switches that are necessary to cause initiation of a reactor scram. Functional diversity is provided by monitoring a wide range of dependent and independent parameters. The input parameters to the SSLC scram logic are from devices that monitor:*

- ~~*main steam tunnel radiation*~~

Two hardwired manual scram switches which completely bypass the ~~*EMS ECF, the SSLC*~~ RTIS, *and load drivers are provided. The switches on the main control console remove power from the scram pilot valve solenoids and also energize the air header dump valve solenoids (backup scram). When the reactor mode switch is in the SHUTDOWN position, manual scram is also initiated. The manual scram functions are covered in LCO 3.3.1.2.*

BACKGROUND (continued)

Reactor Core Isolation Cooling System (RCIC)

The RCIC system is initiated automatically when either high drywell pressure or low reactor vessel water Level 2 is detected and produces the design flow rate within a specified time. The system then functions to provide makeup water to the reactor vessel until the reactor vessel water level is restored. RCIC flow will shut down automatically when Reactor Water Level - High, Level 8 is detected. In addition, turbine overspeed and high exhaust pressure equipment protection signals will trip the turbine. The RCIC system is also shut down by the isolation feature described in the isolation section of this LCO.

High Pressure Core Flooder System (HPCF)

The HPCF is provided with system level and device level manual controls which permit operator control of the systems. The manual controls for HPCF C diverse logic *system initiation are hardwired and completely bypass the ~~EMS~~* ECF *and SSLC.*

STD DEP 16.3-85

Automatic Depressurization System (ADS)

The motive power for the opening ~~the~~ ADS valves is from local accumulators supplied by the high pressure nitrogen supply systems (Division I and II). The ADS accumulators have sufficient capacity to operate the safety relief valve ~~twice with the drywell at 70% of design pressure~~ one time at drywell design pressure or five times at normal drywell pressure *with no external source of nitrogen.*

Two ADS subsystems, ADS 1 and ADS 2 are provided. ADS 1 is controlled by a division I ~~SLU~~ DLC *Pair and ADS 2 is controlled by a division II ~~SLU~~* DLC *Pair. Each ADS division controls one of the two separate solenoid operated pilot valves on each Safety/Relief Valve (SRV) assigned to the ADS. Energizing either pilot valve causes the SRV to open.*

The reactor vessel low water Level 1 for ADS is sourced from ~~8~~ 4 *level transmitters. ~~One set of four is used by the ADS 1 logic and the other set is used by the ADS 2 logic.~~ The low water Level 1.5 ATWS ADS inhibit signal is sourced from 4 level transmitters that are different from the Level 1 transmitters.*

ISOLATION

The isolation instrumentation includes the sensors, the ~~EMS~~ ECF*, the ~~SSLC~~* ELCS*, load drivers, and switches that are necessary to cause closure of the valves provided to close off flow paths that could result in unacceptable fission product release. Functional diversity is provided by monitoring a wide range of independent parameters. The input data to the isolation logic originates in devices that monitor local parameters (e.g. high temperatures, high radiation, high flows) as well as primary system and containment system parameters that are indicative of a leak.*

BACKGROUND (continued)

STD DEP T1 2.3-1

1. Main Steam Line Isolation

The Functions used to initiate MSIV closure are:

- ~~*Main Steam Tunnel Radiation - High*~~

2. Containment Isolation

Containment isolation closes valves (except MSIVs) and dampers in effluent pipes and ducts that penetrate the primary and/or secondary containment to prevent fission product release and initiates the standby gas treatment system (SGTS) to remove fission products from the secondary containment atmosphere. Isolation initiation is performed in the division I, II and III ESF ~~SLUs~~ DLCs. The Functions used for containment isolation initiation are:

- *Drywell Sump Drain Low Conductivity Water (LCW) Radiation - High*

  (Note: Single signal from PRRM system to division I ~~SLU~~ DLC only. This signal is covered by LCO 3.3.1.4, "ESF Actuation Instrumentation".)

- *Drywell Sump Drain High Conductivity Water (HCW) Radiation - High.*

  (Note: Single signal from PRRM system to division I ~~SLU~~ DLC only. This signal is covered by LCO 3.3.1.4, "ESF Actuation Instrumentation".)

- *Reactor Building Area/Fuel Handling Area Exhaust Air Radiation - High.*

  (Note: Signal received directly from PRRM discrete outputs to the ~~DTMs~~ DTFs.)

BACKGROUND (continued)

3. Reactor Core Isolation Cooling (RCIC) System Isolation

*The RCIC isolation protects against breaks in the steam supply line to the RCIC turbine. RCIC isolation trip calculations are performed in the ~~DTMs~~ ~~DTUs~~*DTFs *in all four ESF divisions. Isolation initiation for the inboard isolation valve is performed in the division I ESF ~~SLU~~* DLC *and for the outboard isolation valves in the division II ~~SLU~~* DLC *~~pairs~~. The Functions used for RCIC isolation initiation are:*

STD DEP T1 2.4-3

- *RCIC Equipment Area Temperature - High*
- *RCIC Steam Supply Line Pressure - Low*
- *RCIC Steam Supply Line Flow - High*
- *RCIC Turbine Exhaust ~~Diaphragm~~ Pressure - High. (This Function is addressed in LCO 3.3.1.4, "ESF Actuation Instrumentation".)*

STD DEP T1 3.4-1

4. Reactor Water Cleanup System Isolation

This isolation protects against breaks in lines carrying CleanUp Water (CUW) and also serves to align CUW valves so they do not interfere with ECCS injection. Isolation initiation for the inboard isolation valve is performed in the division II ESF ~~SLU pair~~ DLC *and for the outboard isolation valves in the division I ESF ~~SLU pair~~* DLC*. The Functions used for CUW line isolation/ECCS lineup initiation are:*

- *Reactor Vessel Steam Dome Pressure - High. (This Function is used only in division I ~~SLU~~* DLC *actuation logic to close the head spray valve.)*

5. Shutdown Cooling System Isolation

This isolation protects against breaks in lines used in the shutdown cooling mode of the RHR and also serves to align RHR valves so they do not interfere with ECCS injection. Isolation/injection lineup initiation for the RHR loops are performed in the ESF ~~SLUs~~ DLCs *as follows:*

BACKGROUND
(continued)

STD DEP T1 2.4-2 *OTHER ESF FUNCTIONS*

STD DEP 8.3-1

1. Diesel Generator (DG) Initiation. The DGs are initiated on high drywell pressure, low reactor water Level 1.5 and Level 1, or Essential ~~6.9~~ 4.16 kV bus undervoltage (covered in LCO 3.3.1.4, "ESF Actuation Instrumentation").

3. Reactor Building Cooling Water/Service Water Actuation. This Feature is actuated on high drywell pressure, low Level 1, or ~~6.9~~ 4.16 kV emergency bus undervoltage signals (covered in LCO 3.3.1.3).

7. Feedwater Line Break Mitigation. The trip of condensate pumps is initiated upon detection of concurrent high drywell pressure and high feedwater differential pressure.

ATWS MITIGATION

The Standby Liquid Control System (SLCS) initiation and Feedwater Runback (FWRB) ATWS mitigation features are performed by SSLC circuitry diverse to and independent ~~of the microprocessor based devices~~ of the primary protective system functions of RTIS and ELCS*. These Features are initiated by Reactor Vessel Steam Dome Pressure - High or Reactor Water Level-Low, Level 2 Functions when the SRNM ATWS permissive is active. The initiation signals are provided by ~~Analog Trip Modules (ATM)~~* separate I/O units *that are located in the SSLC cabinets.*

There is a~~n ATM~~ separate I/O unit *in each division for each of the functions. The ~~ATM~~* separate I/O units *are connected directly to the sensors in the division associated with the ~~ATM~~ I/O unit. The outputs of all four ~~ATMs~~ I/O units are connected to four logic units (one in each division) using suitable isolation.*

APPLICABLE SAFETY ANALYSIS, LCO, AND APPLICABILITY

The actions of the SSLC are assumed in the safety analyses of References 1, 2, and 8. The SSLC initiates appropriate protective actions when a monitored parameter is outside of a specified Allowable Value to preserve the integrity of the fuel cladding, the Reactor Coolant Pressure Boundary (RCPB), and the containment. The Allowable Values ~~given in Table 3.3.1.1-1~~ are calculated using a prescribed setpoint methodology. The SSLC provides initiation signals for RPS, ESF and plant isolation.

SSLC instrumentation satisfies Criterion 3 of the NRC Policy Statement. Functions not specifically credited in the ABWR safety analysis are retained for the overall redundancy and diversity of the RPS as required by the NRC approved licensing basis.

The OPERABILITY of the SSLC is dependent on the OPERABILITY of the Functions specified in Table 3.3.1.1-1. Each Function must have a required

APPLICABLE SAFETY ANALYSIS, LCO, and APPLICABILITY (continued)

number of OPERABLE divisions, with their setpoints within the specified Allowable Value, where appropriate. The signal processing channels within each division are calibrated consistent with applicable setpoint methodology assumptions. Each channel must also respond within its specified response time.

Where applicable, Allowable Values are ~~specified~~ determined *for each SSLC Function specified in Table 3.3.1.1-1. Nominal trip setpoints are specified in the setpoint calculations. The nominal setpoints are selected to ensure that the effective trip points do not exceed the Allowable Value between successive CHANNEL CALIBRATIONS. Operation with an effective trip point less conservative than the nominal trip setpoint, but within its Allowable Value, is acceptable. A channel is inoperable if the effective trip point is outside the Allowable Value.*

Setpoints are those predetermined values of output at which an action should take place. The numeric setpoints provided in the SSLC processor data base are compared to the measured process parameter (e.g., reactor vessel water level), and when the measured value of the process parameter exceeds the setpoint, the logic in the signal processors declares a trip condition for the parameter.

*This LCO covers all Functions that use connections to the ~~DTMs~~ ~~DTUs~~*DTFs *and the NMS Functions. Functions, other than NMS, that are connected to the ~~SLUs~~ ESF* DLCs *or* RTIS *~~TLUs~~*TLFs *are covered in the system actuation LCOs.*

1.a & b. Startup Range Neutron Monitor (SRNM) Neutron Flux - High/Short Period

*For each division, a high flux, short period, or INOP trip from any one SRNM channel will result in a trip signal from that division. The SRNM trip data is transmitted to the ~~TLUs~~*TLFs *in the ~~SSLC~~*RTIS*. The division of sensor bypass in the RPS portion of the ~~SSLC~~*RTIS *does not bypass the SRNM trip signal input.*

2.a. Average Power Range Monitor Neutron Flux – High, Setdown

The APRM System is made up of four independent divisions. Each APRM division transmits a trip signal to all four RPS ~~TLUs~~ TLFs *using suitable isolators. The system is designed to allow one division to be bypassed. Four divisions of APRM Neutron Flux-High/Setdown are required to be OPERABLE to ensure that no single failure will preclude a scram from this Function on a valid signal. In addition, to provide adequate coverage of the entire core, at least ~~[~~ 51~~]~~ LPRM inputs are required for each APRM division, with at least two LPRM inputs from each of the four axial levels at which the LPRMs are located.*

2.b. Average Power Range Monitor Simulated Thermal Power - High, Flow Biased

APPLICABLE SAFETY ANALYSIS, LCO, AND APPLICABILITY (continued)

Each APRM division receives a total recirculation flow data value ~~from the EMS~~ ECF. The flow is measured using 4 independent flow transmitters that monitor the core plate pressure drop.

The Allowable Value for the upper limit is based on analyses that take credit for the Average Power Range Monitor Simulated Thermal Power-High/Flow Biased Function for the mitigation of the loss of feedwater heater event. The thermal power time constant of < ~~[~~7~~]~~ seconds is based on the fuel heat transfer dynamics.

2.e. Rapid Core Flow Decrease

*The scram signal from this function is sent to the RPS ~~TLUs~~*TLFs *over the same data transmission path as the APRM trips. The APRM System is divided into four divisions. Each APRM division sends a trip signal to all four RPS ~~TLUs~~*TLFs *via suitable isolators. The rate of flow decrease is calculated from total recirculation flow data ~~acquired from the EMS~~ ECF. The flow is measured using 4 independent flow transmitters that monitor the core plate pressure drop.*

The Neutron Monitoring System Rapid Core Flow Decrease Function is required to be OPERABLE in MODE 1 when thermal power is greater than ~~[80~~ 75~~]~~% RTP where there is a possibility of a rapid flow decrease jeopardizing the MCPR SL. At lower power levels a trip of all recirculation pumps will not violate the MCPR SL.

3.a., b. & c. Reactor Vessel Steam Dome Pressure – High

*Each ~~DTM~~ ~~DTU~~*DTF*receives a data value representing measured reactor pressure ~~from the EMS~~ ECF in its division and compares the value against a numeric setpoint to determine if a trip is required for Functions 3.a and 3.b. Each ~~ATM~~* I/O unit *receives a* separate *signal directly from the process sensors for Function 3.c. The ~~ATM~~* I/O unit *compares the signal with a setpoint to generate the ATWS mitigation Feature initiation signal.*

Reactor pressure is measured using four independent (separate vessel taps, instrument piping, etc) pressure transmitters connected to the RPV steam space. The four sensors are connected to both the ~~RMU~~ DTF *and ~~ATM~~* I/O unit *in the same division. The Reactor Vessel Steam Dome Pressure - High Allowable Value is chosen to provide a sufficient margin to the ASME Section III Code limits during pressurization events.*

4. Reactor Vessel Steam Dome - Low (Injection Permissive)

*Each ESF ~~DTM~~ ~~DTU~~*DTF*receives a data value representing measured reactor pressure ~~from the EMS~~ ECF in its division and compares the value against a numeric setpoint to determine if a trip is required.*

APPLICABLE SAFETY ANALYSIS, LCO, and APPLICABILITY (continued)

5. Reactor Vessel Water Level – High, Level 8

*Each ESF ~~DTM~~ ~~DTU~~*DTF*receives a data value representing measured reactor vessel water level ~~from the EMS~~ ECF in its division and compares it against a numeric setpoint to determine if a Level 8 trip is required.*

6.a. & b. Reactor Vessel Water Level – Low, Level 3

*Each ~~DTM~~ ~~DTU~~*DTF*receives a data value representing measured reactor vessel level ~~from the EMS~~ ECF in its division and compares it against a numeric setpoint to determine if a Level 3 trip is required.*

7.a., b. & c. Reactor Vessel Water Level – Low, Level 2

*Each ESF ~~DTM~~ ~~DTU~~*DTF*receives a data value representing measured reactor vessel water level ~~from the EMS~~ ECF in its division and compares it against a numeric setpoint to determine if a Level 2 trip is required for Functions 7.a and 7.b. Each ~~ATM~~* I/O unit *receives a separate signal directly from the process sensors for Function 7.c. The ~~ATM~~* I/O unit *compares the signal with a setpoint to generate the ATWS mitigation Feature initiation signal.*

The reactor water level signals originate in four independent (separate vessel taps, instrument piping, etc.) level transmitters that sense the pressure difference between a constant column of water (reference leg) and the effective water column (variable leg) in the vessel. The four sensors are connected to both the ~~ATM~~ I/O unit *and ~~RMU~~* DTF *in the same division.*

8.a., b., & c. Reactor Vessel Water Level – Low, Level 1.5

*Each ~~DTM~~ ~~DTU~~*DTF*receives a data value representing measured reactor vessel water level ~~from the EMS~~ ECF in its division and compares it against a numeric setpoint to determine if a Level 1.5 trip is required.*

9.a., b. & c. Reactor Vessel Water Level – Low, Level 1

*Each ESF ~~DTM~~ ~~DTU~~*DTF*receives two data values from independent transmitters representing measured reactor vessel water level ~~from the EMS~~ in its division and compares them separately against a numeric setpoint to determine if a Level 1 trip is required. The reactor water level signals originate in eight level transmitters that sense the pressure difference between a constant column of water (reference leg) and the effective water column (variable leg) in the vessel. Data values from four independent transmitters (separate vessel taps, instrument piping, etc.) are used for initiating ADS A, LPFL A & C, CAMS A (9.a), and for the isolation logic (9.c). Four additional transmitters are used to provide data values for initiating the Diesel Generators, the Reactor Building Cooling Water, ADS B, CAMS B and LPFL B (9.b).*

APPLICABLE SAFETY ANALYSIS, LCO, and APPLICABILITY (continued)

10. Main Steam Isolation Valve – Closure

*Each RPS/MSIV ~~DTM~~ ~~DTU~~*DTF *directly receives ~~(i.e. not via the EMS ECF)~~ valve closure data from both the outboard and inboard MSIVs on a single steamline.*

~~11.a., b., & c.~~ 11.a., b., c., & d. *Drywell Pressure – High*

High pressure in the drywell could indicate a Reactor Coolant Pressure Boundary (RCPB) break or a Feedwater Line Break *inside the drywell.*

- *ESF Initiation (11.b). Various ESF features that are initiated on this Function are SGTS, CAMS, RCW and RSW.*
- Feedwater Line Break Mitigation Initiation (11.d). The feedwater line break mitigation feature is initiated on this function concurrent with a feedwater line break differential pressure – high (Function 15).

STD DEP T1 2.4-2

*Each ~~DTM~~ ~~DTU~~*DTF *~~(both the RPS/MSIV and ESF DTMs DTUs)~~ receives a data value representing measured drywell pressure ~~from the EMS ECF~~ in its division and compares it against a numeric setpoint to determine if a trip is required.*

ESF, ~~and~~ isolation, and feedwater line break mitigation initiation (Functions 11.b, ~~and~~ 11.c, and 11.d*) are required in MODES 1, 2, and 3 where considerable energy exists in the RCS, resulting in the limiting transients and accidents.*

12. CRD Water Header Charging Pressure - Low

*Each RPS/MSIV ~~DTM~~ ~~DTU~~*DTF *receives a measured CRD charging header pressure value ~~from its associated EMS ECF~~ and compares it against a numeric setpoint to determine if a trip is required.*

13. Turbine Stop Valve – Closure

*Turbine Stop Valve – Closure signals are initiated by a position switch on each of the four stop valves. Each position switch sends a discrete signal directly to one of the four RPS/MSIV ~~DTMs~~ ~~DTUs~~*DTFs *~~(i.e. does not come via the EMS ECF)~~. The logic for the Turbine Stop Valve – Closure Function is such that a trip will occur when closure of two or more TSVs is detected.*

*This Function must be enabled at THERMAL POWER ≥ 40% RTP. This is normally accomplished automatically using the data from four independent pressure transmitters sensing turbine first stage pressure. Turbine first stage pressure data is received in each RPS ~~DTU~~*DTF *~~via the EMS~~.*The Turbine Stop Valve – Closure Function is automatically bypassed when thermal power is less than the specified condition of applicability. The thermal power value calculated for the Average Power Range Monitor Simulated Thermal Power-High, Flow Biased Function is used to implement the bypass.

APPLICABLE SAFETY ANALYSIS, LCO, and APPLICABILITY (continued)

14. Turbine Control Valve Fast Closure, Trip Oil Pressure - Low

*Turbine Control Valve Fast Closure, Trip Oil Pressure - Low signals are initiated from a pressure sensor on each of the four turbine control valve hydraulic mechanisms. The pressure sensor data associated with each control valve is transmitted directly to one of the four RPS/MSIV ~~DTMs~~ ~~DTUs~~*DTFs~~ (i.e., are not transmitted via the EMS ECF)~~. This Function must be enabled at THERMAL POWER ≥40% RTP as described for the Turbine Stop Valve – Closure Function.*

STD DEP T1 2.3-1

~~*15.a. & b. Main Steam Tunnel Radiation High*~~

~~*High radiation in the steam line tunnel indicates a potential gross fuel failure. The MSIVs are therefore closed when high steam tunnel radiation (15.b) is detected to prevent possible violation of the offsite release limits. The MSIV closure causes a loss of the normal heat sink which results in reactor pressure, neutron flux, and heat flux transients that must be limited. Therefore, a reactor scram (15.a) is also initiated on high radiation in the main steam tunnel to rapidly reduce power and therefore the severity of the transients. This Function is not specifically credited in any ABWR safety analysis, but it is retained for overall redundancy and diversity as required by the NRC approved licensing basis.*~~

~~*High steam tunnel radiation is detected using four radiation detectors located such that each detector can sense all four main steam lines. One radiation detector is connected to each division of the Process Radiation Monitoring (PRRM) System trip signals are generated when the radiation level exceeds its setpoint. A discrete signal is sent directly from the PRRM divisions to the RPS DTM in the same division (i.e. does not pass through the EMS).*~~

~~*The Allowable Value for this Function is set low enough to provide reasonable assurance that protective action will occur due to excessive radiation but high enough to prevent spurious scrams due to normal steam tunnel radiation levels.*~~

~~*Four divisions of the Steam Line Tunnel Radiation - High Function are required to be OPERABLE to provide confidence that no single failure will preclude protective action from this Function on a valid signal.*~~

~~*RPS initiation (Function 15.a) is required to be OPERABLE in MODES 1 and 2 consistent with the applicability of the RPS in LCO 3.3.1.2, "RPS and MSIV Actuation." The MODES applicability of RPS does not apply to this Function because there is no flow in the steamlines.*~~

~~*Isolation initiation (Function 15.b) is required to be OPERABLE in MODES 1, 2, and 3 consistent with the applicability of LCO 3.6.1.1, "Primary Containment."*~~

STD DEP T1 2.4-2

APPLICABLE SAFETY ANALYSIS, LCO, AND APPLICABILITY (continued)

15. Feedwater Line Differential Pressure

High feedwater line differential pressure could indicate a Feedwater Line Break inside the drywell. This function, concurrent with the drywell pressure- high Function (Function 11.d) provides a condensate pump trip signal to reduce the amount of energy added to the drywell. Feedwater line break mitigation initiation is not specifically credited in any ABWR safety analysis, but it is retained for overall redundancy and diversity as required by the NRC approved licensing basis.

Each ~~*DTU*~~DTF ~~*(both the RPS/MSIV and ESF DTUs)*~~ receives a data value representing measured drywell pressure ~~*from the ECF in its division*~~ and compares it against a numeric setpoint to determine if a trip is required. Feedwater line differential pressure is measured using four differential pressure transmitters connected to the feedwater lines. The Allowable Value was selected to be as low as possible and be indicative of a LOCA inside primary containment.

Four divisions of Feedwater Line Differential Pressure - High Function are required to be OPERABLE to ensure that no single instrument failure will preclude protective action from this Function on a valid signal.

Feedwater line break mitigation initiation is required to be OPERABLE in MODES 1, 2, and 3 where considerable energy exists in the RCS, resulting in the limiting transients and accidents.

16.a. & b. Suppression Pool Temperature - High

The high temperature trip data from the suppression pool temperature monitoring system is connected to the RPS/MSIV ~~DTM~~ ~~DTU~~DTF in the same division.

17. Condensate Storage Tank Level – Low

Each ESF ~~DTM~~ ~~DTU~~DTF receives a data value representing measured condensate storage tank level ~~from the EMS ECF~~ in its division and compares it against a numeric setpoint to determine if a transfer is required. Condensate Storage Tank Level -Low signals originate from four level transmitters. The Condensate Storage Tank Level - Low Function Allowable Value is high enough to ensure adequate pump suction head while water is being taken from the CST.

Four channels of the Condensate Storage Tank Level - Low Function are required to be OPERABLE to provide confidence that no single failure will preclude a transfer of the suction source on a valid signal. The Function is required to be OPERABLE in MODE 1 and in MODES 2 and 3. This Function must also be OPERABLE in MODES 4 and 5 when HPCF is used to satisfy the requirement that at least 2 ECCS system be OPERABLE with RPV Level less than [23] feet above the vessel flange. The applicability basis is the same as given for RCIC and HPCF in LC0 3.5.1, "ECCS-Operating" and LC0 3.5.2, "ECCS-Shutdown".

APPLICABLE SAFETY ANALYSIS, LCO, AND APPLICABILITY (continued)

18. Suppression Pool Water Level – High

*Each ESF ~~DTM~~ ~~DTU~~*DTF *receives a data value representing measured suppression pool water level ~~from the EMS ECF~~ in its division and compares it against a numeric setpoint to determine if a transfer is required. Suppression Pool Water Level – High data originates in four level transmitters. The Allowable Value for the Suppression Pool Water Level - High Function is chosen to ensure that RCIC and HPCF will be aligned for suction from the suppression pool before the water level reaches the point at which suppression pool design loads would be exceeded.*

Four channels of the Suppression Pool Temperature-High Function are required to be OPERABLE to provide confidence that no single failure will preclude a transfer of the suction source on a valid signal. The Function is required to be OPERABLE in MODE 1 and in MODES 2 and 3. This Function must also be OPERABLE in MODES 4 and 5 when HPCF is used to satisfy the requirement that at least 2 ECCS system be OPERABLE with RPV Level less than [23] feet above the vessel flange. The applicability basis is the same as given for RCIC and HPCF in LC0 3.5.1, "ECCS-Operating" and LC0 3.5.2, "ECCS-Shutdown".

19. Main Steam Line Pressure – Low

*The pressure transmitter signals are digitized and transmitted to the RPS/MSIV ~~DTM~~ ~~DTUs~~*DTFs *~~via the EMS ECF~~.*

20. Main Steam Line Flow – High

*The flow transmitter signals are digitized and transmitted to the RPS/MSIV ~~DTM~~ ~~DTUs~~*DTFs *~~via the EMS ECF~~.*

21. Condenser Vacuum - Low

*The pressure transmitter signals are digitized and transmitted to the RPS/MSIV ~~DTM~~ ~~DTUs~~*DTFs *~~via the EMS ECF~~.*

22. Main Steam Tunnel Temperature – High

*The temperature signals are digitized and transmitted to the RPS/MSIV and ESF ~~DTM~~ ~~DTUs~~*DTFs *~~via the EMS ECF~~.*

The Main Steam Tunnel Temperature-High Allowable Value is chosen to detect a leak equivalent to [95] L/min. This Function is required to be OPERABLE in MODES 1, 2, and 3 consistent with the Applicability for LC0 3.6.1.1, "Primary Containment."

APPLICABLE SAFETY ANALYSIS, LCO, AND APPLICABILITY (continued)

23. Main Turbine Area Temperature – High

The temperature transmitter data is digitized and transmitted to the RPS/MSIV ~~DTM~~ ~~DTUs~~DTFs in each division~~ via the associated EMS ECF~~.

24a. & 24b. Reactor Building Area/Fuel Handling Area, Exhaust Air Radiation – High

Trip signals from the PRRM divisions are sent to the ESF ~~DTM~~ ~~DTUs~~DTFs in the same division.

25. RCIC Steam Line Flow – High

The RCIC Steam Line Flow – High data originates in four transmitters that are connected to the RCIC steam lines. The transmitter signals are digitized and transmitted to the ESF ~~DTM~~ ~~DTUs~~DTFs~~ via the EMS ECF~~.

26. RCIC Steam Supply Line Pressure – Low

Low RCIC steam supply line pressure indicates that the pressure of the steam in the RCIC turbine may be too low to continue operation of the turbine. This isolation is for equipment protection and is not assumed in any transient or accident analysis for the ABWR. However, it also provides a diverse signal to indicate a possible system break. These instruments are included in the Technical Specifications (TS) because of the potential for risk due to possible failure of the instruments preventing RCIC initiations.

The RCIC Steam Supply Line Pressure - Low data originates in four pressure transmitters that are connected to the system steam line. The transmitter signals are digitized and transmitted to the ESF DTFs~~DTM via the EMS~~.

Four channels of the RCIC Steam Supply Line Pressure - Low Function are required to be OPERABLE to ensure that no single instrument failure can preclude isolation initiation or cause a spurious isolation.

The Allowable Value is selected to be high enough to prevent damage to the system's turbines. This Function is required to be OPERABLE in MODES 1, 2, and 3 consistent with the Applicability for LCO 3.6.1.1, "Primary Containment."

27. RCIC Equipment Area Temperature – High

RCIC equipment area temperature data originates in temperature transmitters that are appropriately located to detect potential leaks in RCIC steam lines. The temperature transmitter data is digitized and transmitted to the ESF ~~DTM~~ ~~DTUs~~DTFs~~ via the EMS ECF~~.

APPLICABLE SAFETY ANALYSIS, LCO, AND APPLICABILITY (continued)

28. RHR Area Temperature – High

RHR Area Temperature – High data originates in temperature transmitters that are appropriately located to detect leaks in RHR equipment. Four instruments monitor each of the three RHR areas. The temperature transmitter outputs are digitized and transmitted to the ESF ~~DTM~~ ~~DTUs~~DTFs ~~via the EMS ECF~~.

29. CUW Differential Flow – High

Differential mass flow is calculated in the ~~DTM~~ ~~DTU~~DTF in each ESF division as the sum of the return and blowdown flows subtracted from the suction flow.

The differential pressure transmitter and temperature transmitter data is digitized and transmitted to the ESF ~~DTM~~ ~~DTUs~~DTFs ~~via the EMS ECF~~. If the calculated flow difference is too large, each ~~DTM~~ ~~DTU~~DTF generates an isolation signal.

30, 31, & 32, CUW Area Temperatures – High

There are twelve temperature transmitters that provide input to the CUW Area Temperature – High Functions (four per area). The temperature data is digitized and transmitted to the ~~DTM~~ ~~DTUs~~DTFs ~~via the EMS ECF~~.

STD DEP 16.3-91

33. ~~*Control Building Basement Equipment Cubicle*~~ RCW/RSW Heat Exchanger Room *Water Level – High*

There are four water level transmitters that provide input to the RCW/RSW Heat Exchanger Room Water Level – High Function per RCW/RSW division. The water level data is digitized and transmitted to the ~~DTM~~ ~~DTUs~~DTFs ~~via the EMS ECF~~.

The RCW/RSW Heat Exchanger Room Water Level ~~1~~ High Allowable Values are set low enough to detect a break of the RSW piping.

ACTIONS

A.1, A.2.1.1, A.2.1.2, A.2.2.1, and A.2.2.2

Action A.2.1.1 bypasses all SENSOR CHANNELS, except the NMS, in the affected *division ~~containing the inoperable SENSOR CHANNEL~~. This causes the* trip *logic ~~for all Functions~~ in all ~~the affected division~~* LOGIC CHANNELS, except NMS*, to become 2/3 so a single failure will not result in loss of protection or cause a spurious initiation. However, the degree of redundancy is reduced. As indicated by ~~a~~* the *note ~~in the LCD~~, this action is not applicable to the NMS Functions. This action may be implemented for single SENSOR CHANNEL failures in multiple Functions only when all failures are in the same division.*

Action A.2.1.2 is similar to Action A.2.1.1 but applies only to the NMS Functions as indicated by ~~a~~ the *note ~~in the LCD~~. The ~~NMS~~ trip logic in all NMS divisions then becomes 2/3* for all NMS SENSOR CHANNEL functions, *and remains as 2/4* for all remaining SENSOR CHANNEL

functions ~~*in the SSLC*~~*. In this condition a single failure will not result in loss of protection or cause a spurious initiation.*

B.1, B.2.1, B.2.2, and B.3

Action B.2.1 requires placing the division containing the second failed SENSOR CHANNEL in division of sensors bypass for those Functions given in the ~~*LCO*~~ *note.*

The self-~~*test*~~diagnostic *features of the SSLC, NMS, and* ~~*EMS*~~ ECF *provide a high degree of confidence that no undetected failures will occur in the allowable Completion Time.*

STD DEP 16.3-92

P.1, P.2, R.1, and R.2

If the Function is not restored to OPERABLE status or placed in trip within the allowed Completion Time, or if the affected penetration flow path(s) are not isolated within the allowed Completion Time, ~~*specified number of OPERABLE channels/divisions are not restored to OPERABLE status within the allowed Completion Time*~~ *the plant must be placed in a MODE or other specified condition where the LCO does not apply.*

STD DEP 16.3-105

Q.1, Q.2.1, and Q.2.2

If the Function is not restored to OPERABLE status or placed in trip within the allowed Completion Time, the plant must be placed in a MODE or other specified condition in which the LCO does not apply. This is done by isolating the associated penetration flow paths, or by placing the plant in MODE 4. An analysis of the effects of flow-induced vibration on the remaining open MSIVs and other critical components in the reactor and steam systems must be performed prior to continued operation with an isolated main steamline. Continued plant operation must remain within the bounds of this analysis.

SURVEILLANCE REQUIREMENTS

As noted at the beginning of the SRs, the SRs for each SSLC Sensor instrumentation Function are located in the SRs column of Table 3.3.1.1 1.

SR 3.3.1.1.1

Performance of the SENSOR CHANNEL CHECK provides confidence that a gross failure of a device in a SENSOR CHANNEL has not occurred. A SENSOR CHANNEL CHECK is a comparison of the parameter indicated in one SENSOR CHANNEL to a similar parameter in a different SENSOR CHANNEL. It is based on the assumption that SENSOR CHANNELs monitoring the same parameter should read approximately the same value. Significant deviations between the channels could be an indication of excessive instrument drift in one of the channels or other channel faults. A SENSOR CHANNEL CHECK will detect gross channel failure; thus, it is key to verifying the instrumentation continues to operate properly between each DIVISION FUNCTIONAL TEST.

Agreement criteria are determined by the plant staff based on a combination of the channel instrument and parameter indication uncertainties.

The high reliability of each channel provides confidence that a channel failure will be rare. In addition, the continuous self-tests provide confidence that failures will be automatically detected. However, a frequent surveillance interval of 12 hours is used to provide confidence that gross failures which do not activate an annunciator or alarm will be detected within 12 hours. The SENSOR CHANNEL CHECK supplements less formal, but more frequent, checks of channels during normal operational use of the displays associated with the channels required by the LCO.

SURVEILLANCE REQUIREMENTS (continued)

SR 3.3.1.1.2

To ensure that the APRMs are accurately indicating the true core average power, the APRMs are calibrated to the reactor power calculated from a heat balance. The Frequency of once per ~~[7]~~ days is based on minor changes in LPRM sensitivity, which could affect the APRM reading between LPRM calibrations (SR 3.3.1.1.7).

A Note is provided that imposes the SR only when power is ≥ 25% RTP because it is difficult to accurately determine core THERMAL POWER from a heat balance when THERMAL POWER is < 25% RTP. At low power levels, a high degree of accuracy is unnecessary because of the large inherent margin to thermal limits (MCPR and APLHGR). At ≥ 25% RTP, the Surveillance is required to have been satisfactorily performed within the last ~~[7]~~ days in accordance with SR 3.0.2.

STD DEP 16.3-99

SR 3.3.1.1.3

A DIVISION FUNCTIONAL TEST is performed on the SRNM and APRM-High/Setdown channels in each division to provide confidence that the function will perform as intended.

~~*If the as found trip point is not within its required Allowable Value, the plant specific setpoint methodology may be revised, as appropriate, if the history and all other pertinent information indicate a need for the revision. The as-left setpoint shall be consistent with the assumptions of the current plant specific setpoint methodology.*~~

As noted, this SR is not required to be performed prior to entering MODE 2 from MODE 1 since testing of the MODE 2 required SRNM and APRM Functions cannot be performed in MODE 1. This allows entry into MODE 2 if the surveillance Frequency is not met per SR 3.0.2. In this event, the SR must be performed within 12 hours after entering MODE 2 from MODE 1. Twelve hours is based on the specified high reliability of these Functions and providing a reasonable time in which to complete the SR.

The devices that are used to implement the SRNM-High and APRM-High/Setdown Functions are specified to be highly reliable and low drift. The self-test features provide confidence that most failures will be automatically detected. However, a relatively short surveillance interval of

~~[~~7~~]~~ days is used because of the limited diversity of Functions available for the plant conditions where these Functions are used.

STD DEP 16.3-98 *SR 3.3.1.1.4*

A DIVISION FUNCTIONAL TEST is performed on the SRNM ~~and APRM~~ Functions that are required in MODE~~S 1 and~~ 5 to provide confidence that the Functions will perform as intended.

The ~~[~~31~~]~~ day frequency is based on the specified high reliability and low drift of the devices that are used to implement the ~~SRNM High and APRM High~~ Functions. In addition, the self-test features of the NMS provide confidence

SURVEILLANCE REQUIREMENTS (continued)

that most failures that occur between surveillances will be automatically detected. The diversity of Functions provided (including manual scram), coupled with the SENSOR CHANNEL CHECKS provide confidence that this frequency is adequate.

STD DEP 16.3-99 *SR 3.3.1.1.5 and SR 3.3.1.1.6*

A DIVISIONAL FUNCTIONAL TEST or CHANNEL FUNCTIONAL TEST is performed on the required Functions or channels in each division to provide confidence that the Functions will perform as intended. The test is performed by replacing the process signal with a test signal as far upstream in the instrument channel as possible within the constraints of the instrumentation design and the need to perform the surveillance without disrupting plant operations. The testing may be performed so that multiple uses of a parameter may be tested at one time.

~~*If the as found trip point is not within its required Allowable Value, the plant specific setpoint methodology may be revised, as appropriate, if the history and all other pertinent information indicate a need for the revision. The setpoint shall be left set consistent with the assumptions of the current plant specific setpoint methodology.*~~

The ~~[92~~ 31~~]~~ day frequency is based on the specified high reliability and low drift of the devices that are used to implement the Functions. In addition, the self-test features of the SSLC provides confidence that most failures that occur between surveillances will be automatically detected. The diversity of Functions provided for plant protection (including manual actuation), coupled with the SENSOR CHANNEL CHECKS provide confidence that this frequency is adequate.

The OPERABILITY of the SENSOR CHANNELs is determined by injecting a test signal in a single channel as near to the source as possible to assure that the ~~DTM~~ ~~DTUs~~DTFs in all divisions create an initiation signal when needed and that the signal is received by the ~~TLU~~TLF or ~~SLU~~ DLC.

SR 3.3.1.1.7

LPRM gain settings are determined from the local flux profiles measured by the Automatic Traversing Incore Probe (ATIP) System. This establishes the relative local flux profile for appropriate representative input to the

APRM System. The 1000 MW·d/t Frequency is based on operating experience with LPRM sensitivity changes.

SR 3.3.1.1.8

This surveillance assures that no gaps in neutron flux indication exist between the SRNM and APRM measurements.

The overlap between SRNMs and APRMs is of concern when reducing power into the SRNM range. On power increases, the system design will prevent further increases (initiate a rod block) if adequate overlap is not maintained.

SURVEILLANCE REQUIREMENTS (continued)

This SR is imposed only for the conditions given in the notes in the LCO. After the overlap requirement has been met and indication has transitioned to the SRNMs, establishing the overlap may not be possible (APRMs may be reading downscale once in MODE 2). If overlap is not demonstrated within a division, the Functions in that division that are required per the current MODE and other conditions shall be declared inoperable.

The basic Surveillance Frequency is whenever a transition to low power occurs. A maximum frequency of ~~[7]~~ days is also provided so the SR may be skipped if less than ~~[7]~~ days has elapsed since the last transition to power less than 5% RTP. The maximum Frequency of ~~[7]~~ days is reasonable based on reliability of the SRNMs and APRMs.

STD DEP 16.3-99

SR 3.3.1.1.10 and SR 3.3.1.1.11

CHANNEL CALIBRATION includes calibration of the ~~Analog Trip Modules~~ I/O units *used to implement the ATWS mitigation feature initiation.*

~~*If the as found trip point (fixed or variable) is not within its Allowable Value, the plant specific setpoint methodology may be revised, as appropriate, if the history and all other pertinent information indicate a need for the revision. Calibration shall be provided that is consistent with the assumptions of the current plant specific setpoint methodology.*~~

STD DEP 16.3-93

As noted in ~~SR 3.2.1.1.10~~ SR 3.3.1.1.10*, neutron detectors are excluded from SENSOR CHANNEL CALIBRATION because of the difficulty of simulating a meaningful signal.*

SR 3.3.1.1.14

ISOLATIONSYSTEM RESPONSE TIME acceptance criteria are included in Reference ~~10~~9

REFERENCES

1. ~~*DCD Tier 2, Table 6.2-7.*~~Not Used.

Table B 3.3.1.1-1 (Page 1 of 3)
SSLC Instrumentation Summary

PARAMETER	*~~EMS~~*ECF *Y/N*	*USAGE*

Table B 3.3.1.1-1 (Page 2 of 3)
SSLC Instrumentation Summary

PARAMETER	*~~EMS~~*ECF *Y/N*	*USAGE*
11.Drywell Pressure-High	*Y*	*RPS, LPFL, RCIC, CAM, SGTS, DG, HPCF, ADS, CIV, RCW/RSW, CUW Iso,* Trip of Condensate Pumps (b)
12.CRD Water Header Charging Pressure - Low	~~Y~~N	*RPS*
15.~~*Main Steam Tunnel Radiation-High*~~Feedwater Line Differential Pressure - High	~~N~~Y	~~*RPS*~~Trip of Condensate Pumps (b) ~~*MSIV*~~
16.Suppression Pool Temperature - High	~~Y~~N	*RPS, SPC*
19. Main Steam Line Pressure - Low	~~Y~~N	*MSIV*
20. Main Steam Line Flow - High	~~Y~~N	*MSIV*
21. Condenser Vacuum - Low	~~Y~~N	*MSIV*
22. Main Steam Tunnel Temperature - High	~~Y~~N	*ISO of CUW, MSIV*
23. Main Turbine Area Temperature - High	~~Y~~N	*MSIV*
26.RCIC Steam Supply Line Pressure - Low	*Y*	*ISO of RCIC*

Table B 3.3.1.1-1 (Page 3 of 3)
SSLC Instrumentation Summary

PARAMETER	*~~EMS~~*ECF *Y/N*	*USAGE*

(b) Concurrent drywell pressure – high (Function 11) and feedwater line differential pressure – high (Function 15).

STD DEP T1 3.4-1

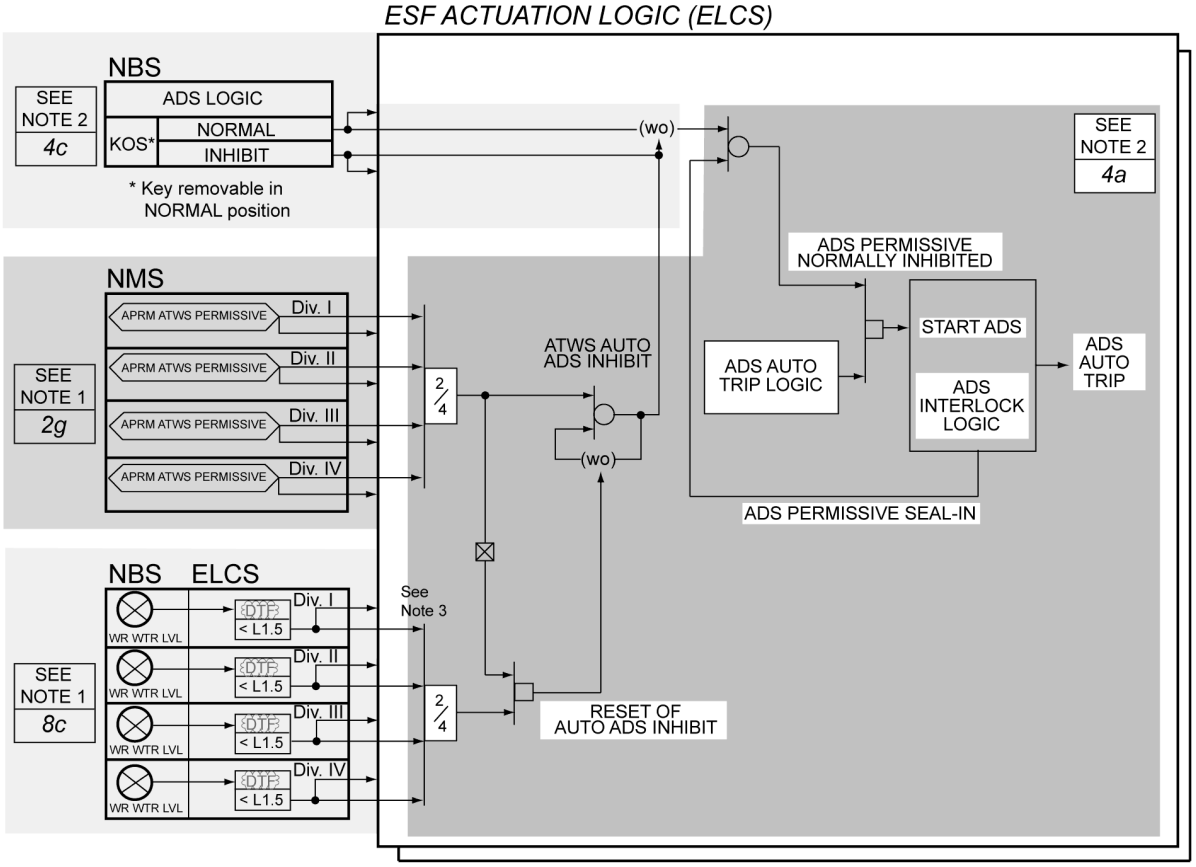

NOTES:
1. FUNCTION NUMBER AS LISTED IN TABLE 3.3.1.1-1 SSLC SENSOR INSTRUMENTATION
2. FUNCTION NUMBER AS LISTED IN TABLE 3.3.1.4-1 ESF ACTUATION INSTRUMENTATION
3. ELCS DIVISION-OF-SENSORS BYPASS APPLIES TO THIS VOTER

Figure B 3.3.1.1-1 ADS Inhibit Instrumentation Channels

STD DEP T1 3.4-1

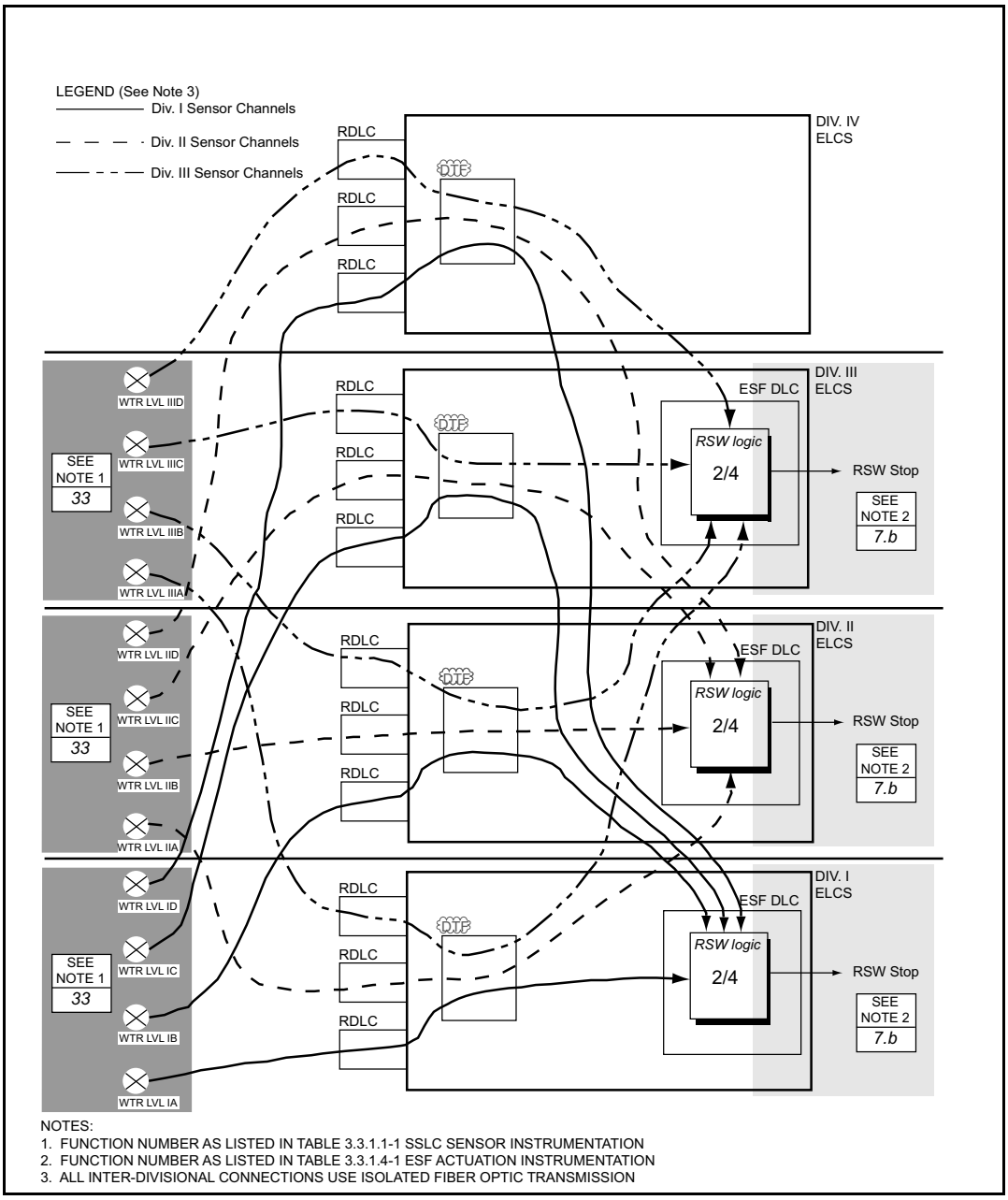

Figure B 3.3.1.1-2 RCW/RSW HX Room Leak Detection Instrumentation Channels

B 3.3 INSTRUMENTATION

B 3.3.1.2 Reactor Protection System (RPS) and Main Steam Isolation Valve (MSIV) Actuation

BASES

The information in this section of the reference ABWR DCD, including all subsections, is incorporated by reference with the following departures and site specific supplements. The site specific supplements partially address COL License Information Item 16.1.

STD DEP T1 3.4-1
STD DEP 16.3-57
STD DEP 16.3-81
STD DEP 16.3-82

BACKGROUND

The final initiation signals for isolating the main steamlines and de-energizing the scram solenoids are transmitted to the Output Logic Units (OLUs) by the ~~TLUs~~ TLFs in the SSLC. There are OLUs in all four divisions and load drivers in the two actuation divisions. The RPS and MSIV use 2/4 logic in both the LOGIC CHANNELS and OUTPUT CHANNELs.

One RPS and one MSIV actuation output from the ~~TLU~~ TLF *may be bypassed. Implementing this bypass causes the LOGIC CHANNEL and OUTPUT CHANNEL logic to change to 2/3. Interlocks are provided to prevent placing more than one RPS or MSIV actuation output in bypass.*

STD DEP 16.3-81

APPLICABLE SAFETY ANALYSIS, LCO and APPLICABILITY

1. RPS Actuation

The RPS Actuation LOGIC CHANNELS and OUTPUT CHANNELS *must be OPERABLE in MODE 1, MODE 2, and in MODE 5 with any control rod withdrawn from a core cell containing at least one fuel assembly.* The NMS (SRNM and APRM) LOGIC CHANNELS must be OPERABLE when the associated Functions in LCO 3.3.1.1 are required to be OPERABLE.

2. MSIV and MSL Drain Valves Actuation

The MSIV and MSL Drain Valves Actuation Function uses a ~~TLU~~ TLF *in all four divisions. The ~~TLU~~* TLF *acquires trip information from the ~~DTMs~~~~DTUs~~*DTFs *and sends actuation signals to the OLUs.*

5. Manual MSIV Actuation

There are four MSIV manual actuation pushbuttons. The data is routed directly to the OLUs for the MSIVs so this Function bypasses the ~~EMS, DTMs and TLUs~~ DTFs and TLFs*.*

ACTIONS
STD DEP 16.3-82

B.1, B.2, and B.3

Condition B occurs if two LOGIC CHANNELs for the same Function *or MSIV manual channels become inoperable in a fashion that does not result in an Actuation. In this Condition, the actuation logic could become 2/2. Therefore, it is appropriate to place one division in trip (Action B.1) and the other in ~~TLU~~* TLF *output bypass (Action B.2). The trip logic then becomes 1/2 so a single failure in the remaining operable divisions would not cause loss of protection. However, a single failure in one of the operable divisions could result in a spurious trip.*

F.1 and F.2

Condition F occurs if two OUTPUT CHANNELs for the same Function *become inoperable in a fashion that does not result in an Actuation.*

STD DEP 16.3-57

I.1 and I.2

If one of the manual scram divisions becomes inoperable then manual scram is unavailable. Placing the affected division in trip (Action I.1) causes the manual scram logic to become 1/1. ~~Note that the automatic actuation logic becomes 1/3in this condition so there is an increased vulnerability to spurious trips.~~

STD DEP 16.3-82

J.1

This Condition assures that appropriate actions are taken for one or more inoperable RPS Actuation Functions while in MODES 1 or 2.

K.1

This Condition assures that appropriate actions are taken for ~~multiple~~ one or more *inoperable RPS Actuation Functions while in MODE 5 with any control rod withdrawn from a core cell containing at least one fuel assembly.*

STD DEP 16.3-82
STD DEP 16.3-105

L.1, L.2.1 and L.2.2

This Condition assures that appropriate actions are taken for ~~multiple~~ one or more *inoperable MSIV Actuation Functions. If the specified Actions for Conditions A, B, C, D, E, F, or G are not implemented within the specified Completion Times the plant must be placed in a condition where the LCO does not apply. This is accomplished by isolating the affected penetration flow paths or placing the plant in MODE 4 where the LCO does not apply.* An analysis of the effects of flow-induced vibration on the remaining open MSIVs and other critical components in the reactor and steam systems

ACTIONS (Continued)

must be performed prior to continued operation with an isolated main steamline. Continued plant operation must remain within the bounds of this analysis.

The Completion Times of 12 hours for isolating the penetration flow paths (Action L.1) provides sufficient time to identify the effected flow paths and perform the action. The Completion Times for achieving MODE 4 (Actions L.2.1 and L.2.2) are reasonable, based on operating experience, to reach MODE 4 in an orderly manner and without challenging plant systems.

SURVEILLANCE REQUIREMENTS

The CHANNEL FUNCTIONAL TESTS required in LCO 3.3.1.1, "SSLC Sensor Instrumentation" ensures that the required SENSOR CHANNELS will perform as intended and generate a trip condition when required. This LCO addresses the operability of the LOGIC CHANNELS and OUTPUT

CHANNELS for RPS and MSIV, which covers the ~~TLUs~~ TLFs*, the output logic units (OLUs), the load drivers, and the manual actuation Functions.*

SR 3.3.1.2.1

A CHANNEL FUNCTIONAL TEST is performed on each manual RPS scram division to ensure that the entire manual trip channel will operate as intended.

This function uses a minimum of components, and the components have been proven highly reliable through operating experience. However, a relatively short surveillance interval of ~~[~~7~~]~~ days is used since availability of manual scram is important for providing a diverse means of reactor scram and the logic is 2/2. The probability of an event requiring manual scram coupled with a failure of one of the scram channels within this time period is very low.

SR 3.3.1.2.2

A DIVISIONAL FUNCTIONAL TEST is performed on the LOGIC CHANNELS in each division to provide confidence that the functions will perform as intended. The test is performed by replacing the normal signal with a test signal as far upstream in the channel as possible within the constraints of the instrumentation design and the need to perform the surveillance without disrupting plant operations. See Section 1.1, "definitions" for additional information on the scope of the test.

The devices used to implement the RPS and MSIV actuation functions are specified to be of high reliability and have a high degree of redundancy. Therefore, the ~~[92~~ 31*~~]~~ day frequency provides confidence that device Actuation will occur when needed. This test overlaps or is performed in conjunction with the DIVISIONAL FUNCTIONAL TESTS performed under LCO 3.3.1.1, "SSLC Sensor Instrumentation" to provide testing up to the OUTPUT CHANNELS.*

SURVEILLANCE REQUIREMENTS (Continued)

SR 3.3.1.2.3

A CHANNEL FUNCTIONAL TEST is performed on each manual MSIV channel to ensure that the channel will operate as intended.

The devices used to implement the manual MSIV actuation are of high reliability and have a high degree of redundancy. Therefore, the [92 31] day frequency provide confidence that device Actuation will occur when needed. The probability of an event requiring manual MSIV actuation coupled with undetected failures in three channels within this time period is very low.

B 3.3 INSTRUMENTATION

B 3.3.1.3 Standby Liquid Control (SLC) and Feedwater Runback (FWRB) Actuation

BASES

The information in this section of the reference ABWR DCD, including all subsections, is incorporated by reference with the following departure and site specific supplements. The site specific supplements partially address COL License Information Item 16.1.

STD DEP 16.3-83

APPLICABLE SAFETY ANALYSIS, LCO AND APPLICABILITY

3. Manual ATWS-ARI/SLCS Initiation

The Manual ATWS-ARI/SLCS Initiation pushbutton channels introduce signals into the SLC and FWRB logic to provide manual initiation capability that is redundant to the automatic initiation. There are two pushbuttons and both must be ~~activated~~ actuated *to initiate* the *SLC*S *and FWRB* functions*. ~~Each switch has four contacts for SLC and FWRB initiation. Signals from both manual switches are sent to the logic in all four divisions. Each contact is a separate channel so there are two manual initiation channels per division.~~* Each pushbutton represents a single manual initiation channel (A, B), and sends redundant initiation signals to each of the channels of the RFCS Fault Tolerant Digital Controller (FTDC). The RFCS FTDC sends redundant manual initiation status signals to each of four ATWS Logic Processors (Divisions I, II, III, and IV). Each Logic Processor performs 2-out-of-3 voting of the manual initiation status signals received from the RFCS FTDC. *The ~~contacts~~* logic *used for manual ARI ~~are~~* is *covered in 3.3.4.1, "ATWS & EOC-RPT Instrumentation."*

SURVEILLANCE REQUIREMENTS

As noted, the SRs to be applied to each required Function are given in Table 3.3.1.3-1.

SR 3.3.1.3.1

A DIVISION FUNCTIONAL TEST is performed on each required LOGIC CHANNEL and manual channel to ensure that the Functions will perform as intended. The test is performed by replacing the normal signal with a test signal as far upstream in the channel as possible within the constraints of the instrumentation design and the need to perform the surveillance without disrupting plant operations. See Section 1.1, "Definitions" for additional information on the scope of the test.

The devices used to implement the SLC and FWRB actuation functions are specified to be highly reliable and have a high degree of redundancy. Therefore, the ~~[92~~ 31*~~]~~ day frequency provides confidence that device Actuation will occur when needed. This test overlaps or is performed in conjunction with the DIVISIONAL FUNCTIONAL TESTS*

SURVEILLANCE REQUIREMENTS (CONTINUED)

performed under LCO 3.3.1.1, "SSLC Sensor Instrumentation" to provide testing up to the OUTPUT CHANNEL.

The devices used to implement the SLC and FWRB actuation functions are specified to be of high reliability and have a high degree of redundancy. Therefore, the ~~[92~~ 31~~]~~ day frequency provides confidence that device Actuation will occur when needed. This test overlaps or is performed in conjunction with the DIVISIONAL FUNCTIONAL TESTS performed under LCO 3.3.1.1, "SSLC Sensor Instrumentation" to provide testing up to the OUTPUT CHANNEL.

STD DEP T1 3.4-1

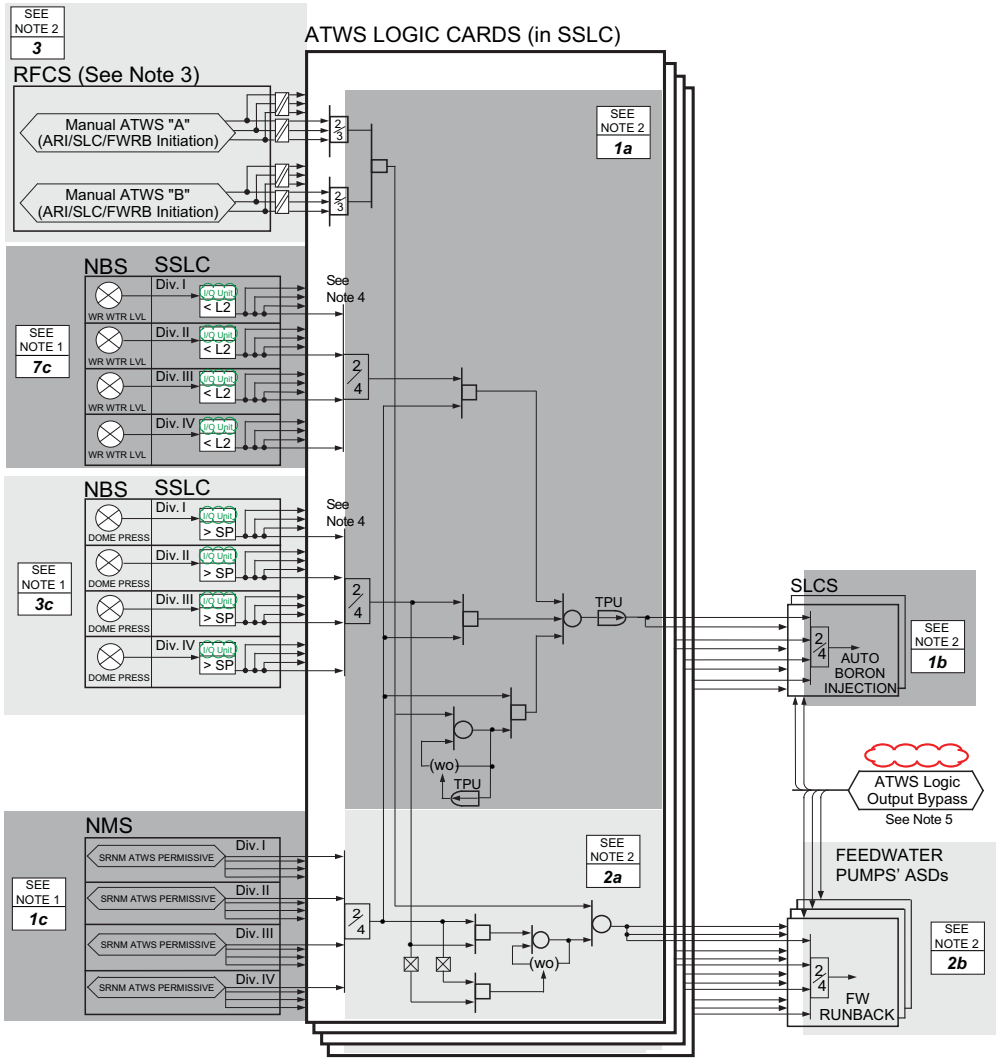

NOTES:
1. FUNCTION NUMBER AS LISTED IN TABLE 3.3.1.1-1 SSLC SENSOR INSTRUMENTATION
2. FUNCTION NUMBER AS LISTED IN TABLE 3.3.1.3-1 SLC and FWRB ACTUATION
3. FOR MANUAL ATWS-ARI FUNCTION, SEE FIGURE B 3.3.4.1-1 ATWS AND EOC-RPT INSTRUMENTATION CHANNELS
4. SSLC DIVISION-OF-SENSORS BYPASS APPLIES TO THIS VOTER
5. SAME ARRANGEMENT AS TLB OUTPUT LOGIC BYPASS BUT PERFORMED INDEPENDENTLY

Figure B 3.3.1.3-1 SLC and FWRB INSTRUMENTATION CHANNELS

[This page intentionally left blank]

B 3.3 INSTRUMENTATION

B 3.3.1.4 Engineered Safety Features (ESF) Actuation Instrumentation

BASES

The information in this section of the reference ABWR DCD, including all subsections, is incorporated by reference with the following departures and site specific supplement. The site specific supplement partially addresses COL License Information Item 16.1.

STD DEP T1 2.4-2
STD DEP T1 2.4-3
STD DEP T1 3.4-1 (All)
STD DEP 7.3-17
STD DEP 8.3-1
STD DEP 16.3-87
STD DEP 16.3-99

BACKGROUND

STD DEP 7.3-17

The final initiation signals for the non-MSIV valves are transmitted from the ~~SSLC~~ ESF *~~SLUs~~* DLCs *to remote actuation devices (OUTPUT CHANNELS). The non-MSIV isolation valve logic is contained in ~~SLU pairs in four~~ divisions* I, II, and III *as described in LCO B 3.3.1.1, "SSLC Sensor Instrumentation".*

A description of the operation of the ESF SENSOR CHANNELS and LOGIC CHANNELS is given in LCO 3.3.1.1, "SSLC Sensor Instrumentation". For ECCS Functions, *~~Each of a redundant pair of ESF SLU~~* two channels *send~~s~~ initiation data to an OUTPUT CHANNEL via the ~~EMS~~* ECF. For ADS, the *~~The~~ OUTPUT CHANNEL must receive initiation data from both ~~SLU~~*DLC*s before system actuation will occur.* For LPCF, HPCF, and RCIC, there are two redundant DLCs within a single ESF division. One OUTPUT CHANNEL initiation data actuates the associated valve(s) and the other OUTPUT CHANNEL initiation data actuates the associated pump(s). Both the associated pump(s) and valve(s) must be initiated for activation of the function. *The 2/2 output actuation logic for ADS is provided to reduce the potential for inadvertent ESF actuation and the resulting stress on plant equipment and attendant plant risk. ~~There is an OUTPUT CHANNEL for each required device (pump, valve, etc.).~~*

Except for ECCS functions, most other ESF functions are implemented using a single channel within a single DLC per division. Some ESF isolation functions are provided with redundant DLCs with a bypassable final voter (e.g., RCW Inside Drywell Isolation) to reduce the risk of plant operational impact of DLC failure.

~~One of the redundant SLU inputs to an OUTPUT CHANNEL except for the ADS OUTPUT CHANNELS may be bypassed either manually or automatically be the SSLC self test. When one SLU input to an OUTPUT CHANNEL is bypassed the actuation logic becomes one-of-one.~~

Manual initiation capability is provided for the systems and devices addressed by this LCO. There are three manual switches for containment isolation, one each in division I, II, and III. For isolation functions implemented with redundant channels, each *~~Each of these~~ switch~~es~~ has ~~two contacts with~~ one contact routed to ~~one~~* both *of the associated redundant ~~SLU~~* channel*s pairs ~~and the other contact routed to the other SLU~~. Together, these switches cause closure of all isolation valves, except for RCIC and MSIVs. ~~Any two of the switches will isolate all isolatable paths, except for RCIC.~~ RCIC manual isolation is provided by two independent switches in divisions I and II. The RCIC manual isolation switch logic is as described for containment isolation.*

*Manual ECCS injection initiation for RCIC, LPFL A, B, & C, HPCF B, and ESF support features are implemented as described for containment isolation. HPCF C manual initiation uses hardwired signals that bypass the ~~EMS~~*ECF *and the SSLC LOGIC CHANNELS. ADS manual initiation uses two switches in each ADS division. Each switch has one contact that is routed to one member of the ~~SLU~~* DLC *pair associated with ADS. Both switches in one division must be pressed to open the ADS valves. The ADS manual inhibit for ATWS mitigation has one switch in each ADS division. Each switch has two contacts which are connected to the ~~SLU~~* DLC *pair associated with ADS in the division.*

*Most of the SENSOR CHANNELS required to initiate protective action are covered in LCO 3.3.1.1, "SSLC Sensor Instrumentation". This LCO covers the Manual initiation channels, LOGIC CHANNELS, OUTPUT CHANNELS, and those SENSOR CHANNELS not addressed in LCO 3.3.1.1. The SENSOR CHANNELS, except those from the NMS, that are routed directly to the ~~SLU~~*DLC*s are covered by this LCO since the ~~SLU~~*DLC*s are part of the LOGIC CHANNEL.*

STD DEP T1 3.4-1 *CHANNEL DEFINITIONS*

*The channel structure for the channel types covered by this LCO are depicted in Figures B 3.3.1.4-1 through B 3.3.1.4-~~4~~*5*. The channel structure in these Figures is similar with the basic structure as shown in Figure B 3.3.1.4-1. The channel characteristics shown in the* Figures *~~Figure B 3.3.1.4-1~~ are:*

Figure B 3.3.1.4-1 (Containment Isolation, ESF Support Systems);

- A single channel, including manual and automatic features, initiates the Function.

Figures B 3.3.1.4-2 (ECCS except ADS and HPCF C), B 3.3.1.4-3 (HPCF C);

- *Each of the redundant* DLCs *~~SLU pairs~~ is considered to be a separate LOGIC CHANNEL* although they originate within the same division.
- Figure B 3.3.1.4-3 shows the hardwired manual channel for HPCF C diverse logic which applies only to division III.

- ~~*The separate contacts from a*~~ *A single switch operator* ~~*are shown as*~~ provides the manual initiation signal *to* ~~*separate*~~ both *manual initiation channels*, except HPCF C.

Figures B 3.3.1.4-4 (ADS);

- *The OUTPUT CHANNEL consists of two load drivers in series* ~~*with the LOGIC CHANNEL bypass included in the OUTPUT CHANNEL*~~.
- *The ADS has two manual initiation switches, one ATWS Manual ADS Inhibit, and no LOGIC CHANNEL bypass capability.*
- A single SENSOR CHANNEL provides sensor data to both of the associated DLCs.

Figure B 3.3.1.4-5 (RCW/RSW Isolation);

- The OUTPUT CHANNEL includes two load drivers in series.
- *A single SENSOR CHANNEL provides sensor data to both of the associated* ~~*SLUs*~~ DLCs.
- The RCW/RSW Isolation has one manual initiation switch.

~~*The differences in the other Figures are:*~~

- ~~*- Figure B 3.3.1.4-2 uses the SLU 3/4 pair and applies only to divisions I and II.*~~
- ~~*- Figure B 3.3.1.4-3 shows the hardwired manual channel for HPCF C which applies only to division III.*~~
- ~~*- Figure B 3.3.1.4-4 shows the ADS which has manual initiation switches, one ATWS Manual ADS Inhibit, and no LOGIC CHANNEL bypass capability.*~~

APPLICABLE SAFETY ANALYSIS, LCO, and APPLICABILITY

1.a, 1.b, 2.a, 2.b, 3.a, 3.b. ECCS Pump Discharge Flow – Low and Pressure – High

One flow and one pressure transmitter per pump are used to detect the associated subsystem discharge pressure to verify operation of the pump. Note that these pressure transmitters are not the same as the ones used in the ADS permissive described in B 3.3.1.1, "SSLC Sensor Instrumentation". Data values representing pressure and flow are received by the ESF ~~*SLUs*~~ DLCs *associated with the pump initiation division* ~~*via the EMS in the same division*~~*. The data values are compared to the respective setpoints in the ESF* ~~*SLU*~~ DLC ~~*pair DTM equivalent Function*~~ *to determine if the associated minimum flow valve is to be closed or opened.* ~~*The LPFL minimum flow valves are time delayed so the valves will not open unless high pressure concurrent with low flow persists for a specified time.*~~

APPLICABLE SAFETY ANALYSIS, LCO, and APPLICABILITY (continued)

~~The time delay is provided to limit reactor vessel inventory loss during startup of the RHR shutdown cooling mode.~~

2.c. HPCF Pump Suction Pressure – Low

The suction pressure data originates in a pressure transmitter and is sent ~~via the EMS~~ to the ESF ~~SLU pair~~ DLCs *in the division that controls the HPCF pump being monitored. The ~~SLU~~* DLC *logic is arranged so that Low suction pressure must exist for a specified amount of time before pump start will be inhibited to prevent spurious inhibits due to suction pressure transients. The HPCF low suction pressure signal ~~is automatically~~* must be manually *reset ~~(i.e. no manual reset needed to remove the pump start inhibit when suction pressure recovers)~~. The HPCF Suction Pressure – Low Function is assumed to be OPERABLE and will not cause a spurious pump start inhibit during the transients and accidents analyzed in References 1, 2, and 3.*

1.c, 2.d, 3.c, 4.a. ECCS Systems Initiation.

These Functions are the LOGIC CHANNELS that send initiation data to the OUTPUT CHANNELS for the ECCS systems. The LOGIC CHANNELS for a specific ECCS subsystem are in the same division as the subsystem. Two LOGIC CHANNELS ~~(dual redundant SLUs)~~ must be OPERABLE when the associated ECCS feature is required to be OPERABLE. The applicability basis for the ECCS systems are given in LCO 3.5.1, "ECCS – Operating", and LCO 3.5.2, "ECCS – Shutdown". A LOGIC CHANNEL is OPERABLE when it is capable of generating device actuation data and transmitting it to the OUTPUT CHANNELS.

1.e, 2.f, 3.e. ECCS System Injection Manual Initiation – Except HPCF C.

The Manual Initiation push button channels introduce signals into the appropriate ECCS logic to provide manual initiation capability that is redundant to the automatic initiation SENSOR CHANNELS. ~~There is one push button with two contacts for each of the ECCS pumps.~~ Manual initiation data is acquired by ~~the SLU pair~~ each LOGIC CHANNEL *~~(one contact to each SLU in the pair LOGIC CHANNEL)~~ that controls the ECCS pumping subsystem, except for HPCF C* diverse logic*. HPCF C* diverse logic *Manual Initiation is hardwired to provide a diverse means of ECCS initiation.* For each function, both LOGIC CHANNELS must be OPERABLE for the associated Manual Initiation Function to be OPERABLE.

The Manual Initiation Function is not assumed in any accident or transient analyses for the ABWR. However, the Function is retained for overall redundancy and diversity of the ECCS features as required by the NRC in the plant licensing basis.

There is no Allowable Value for this Function since it is mechanically actuated based solely on the position of the manual initiation switches. Two channels of the Manual Initiation Function for each ECCS pump, except HPCF C diverse logic*, are required to be OPERABLE when the associated ECCS is required to be OPERABLE. Refer to LCO 3.5.1, "ECCS –*

APPLICABLE SAFETY ANALYSIS, LCO, and APPLICABILITY (continued)

Operating" and LCO 3.5.2, "ECCS – Shutdown" for Applicability Bases for the ECCS subsystems.

2.g. HPCF C Diverse Logic Manual Initiation

The HPCF C Diverse Logic *Manual Initiation channel completely bypasses the SSLC channels (see figure B 3.3.1.4-3) and provides direct control of the actuated devices. One manual pushbutton causes HPCF C to align for injection and initiates the pump start sequence.*

The HPCF C Diverse Logic *Manual Initiation Function is not assumed in any accident or transient analyses for the ABWR. However, the Function is retained for overall redundancy and diversity of the ECCS features as required by the NRC in the plant licensing basis.*

There is no Allowable Value for this Function since it is mechanically actuated based solely on the position of the manual switch. One channel of the HPCF C Diverse Logic *Manual Initiation Function is required to be OPERABLE when HPCF C is required to be OPERABLE. Refer to LCO 3.5.1, "ECCS – Operating" and LCO 3.5.2, "ECCS-Shutdown" for Applicability Bases for the ECCS subsystems.*

4.b. ADS Device Actuation

Each ADS valve has two OUTPUT CHANNELS and an associated solenoid valve (i.e., each ADS valve has two solenoid valves with the "A" solenoid valve actuated from the ADS division I OUTPUT CHANNEL and the "B" solenoid valve actuated from the ADS division II OUTPUT CHANNEL)*. Energizing either of the OUTPUT CHANNELS will cause the valve to open. Each ~~output~~* OUTPUT CHANNEL *receives an appropriate signal from the associated LOGIC CHANNEL when a protective action is required. Two OUTPUT CHANNELS must be OPERABLE when ADS is required to be OPERABLE. The channels are OPERABLE when they are capable of going to the state needed to perform the protective action and recovering to the normal state.*

The ADS OUTPUT CHANNEL is inoperable when either of the two load drivers connected to a solenoid is inoperable.

4.c. ADS Manual Initiation

The Manual Initiation push button channels introduce signals into the ADS logic to provide manual initiation capability that is redundant to the automatic SENSOR CHANNELS. There are two push buttons for each ADS division trip system (total of four pushbuttons). Each member of the ~~SLU~~ DLC *pair used to implement ADS acquires data from one of the switches (see Figure B 3.3.1.4-4). The manual actuation data is acquired by the ~~SLU~~* DLC*s that control the ADS subsystems. Both switches associated with one of the ADS divisions must be activated to initiate ADS in that division.*

APPLICABLE SAFETY ANALYSIS, LCO, and APPLICABILITY (continued)

4.d and e. ADS Division I/Division II ECCS Pump Discharge Pressure – High (permissive)

Pump discharge pressure data originates in two pressure transmitters on the discharge side of each of the three low pressure and two high pressure ECCS pumps. The data from one transmitter on each pump is sent to the ESF ~~SLUs~~ DLCs *associated with ADS 1 and the data from the second transmitter is sent to the ESF ~~SLUs~~* DLCs *associated with ADS 2. The ~~SLU~~* DLC *logic will declare an ADS permissive if any one of the 5 pressure values are above their respective setpoints.*

4.f. ATWS Manual ADS Inhibit

The ATWS Manual ADS Inhibit push button channels introduce signals into the ADS logic to provide manual ADS inhibit capability that is redundant to the automatic SENSOR CHANNELS. There is one push button for each ADS division trip system. ~~Each pushbutton has two contacts. Each member of the SLU pair~~ Both DLCs *used to implement ADS* within a division *acquire data from ~~one of the contacts on~~ the switch in its division (see Figure B 3.3.1.4-4).*

STD DEP 8.3-1

5.a, 5.b, 7.d, 7.e. Divisions I, II, & III Loss of Voltage – ~~6.9~~ 4.16 *kV and Degraded Voltage – ~~6.9~~* 4.16 *kV.*

The ~~6.9~~ 4.16 *kV busses are monitored to detect a loss of the offsite power or degraded bus conditions. If the bus voltage is less then required to support ESF features, the associated emergency Diesel-Generator (DG), provided as a back up to the offsite power source, is started. These SENSOR CHANNELS are provided to assure that there is sufficient power available to supply safety systems should they be needed. This Function is assumed in the loss of offsite power analysis of reference 3. The RCW/RSW system is also started on these Functions since it provides cooling for the diesels.*

The signals for this Function originate in undervoltage relays connected to each phase of the ~~6.9~~ 4.16 *kV bus. The phases are connected so that the loss of a single phase will cause two of the undervoltage relays to trip. The three undervoltage relays are combined in 2/3 logic so that a loss of any phase will cause starting of the associated DG while a failure in one of the relays will not cause a spurious start. A time delay is provided to prevent starting the DG due to transient conditions on the bus.*

The undervoltage relay trip signals are transmitted to the ~~SLU pair~~ DLCs *in the associated division via the ~~EMS~~* ECF*.*

STD DEP 8.3-1

5.c Diesel Generator Initiation.

The Diesel Generators (DG) are used to supply emergency back up power to the ESF systems. The division II and III DGs receive a start signal when HPCF is initiated and all three divisions receive a start signal when the LPFL's are initiated. Each DG also receives a start signal from the divisional ~~6.9~~ 4.16 *KV bus monitors.*

APPLICABLE SAFETY ANALYSIS, LCO, and APPLICABILITY (continued)

The DGs LOGIC CHANNELS are required to be OPERABLE in MODES 1, 2, 3, and in MODE 4 and 5 when the associated DG's are required to be OPERABLE.

5.e Diesel Generator Manual Initiation.

The Manual Initiation push button channels introduce signals into the appropriate ESF feature logic to provide manual initiation capability that is redundant to the automatic initiation SENSOR CHANNELS. There is one push button for each of the ESF features with manual initiation capability. The manual initiation data is acquired by the ~~SLU pair~~ DLC *that controls the ESF feature.*

STD DEP 8.3-1

7.a. Reactor Building Cooling Water/Reactor Service Water Initiation.

This Function is included to provide confidence that the HVAC needed to support ESF systems is within the design basis. The initiation occurs on high drywell pressure, low Level 1, or ~~6.9~~ 4.16 *KV emergency bus monitors. This Function is not explicitly assumed in any accident or transient analysis for the ABWR. These signals, or suppression pool high temperature, also initiate shedding of non-essential loads.*

7.c RCW/RSW Manual Initiation

The Manual Initiation push button channels introduce signals into the appropriate ESF feature logic to provide manual initiation capability that is redundant to the automatic initiation SENSOR CHANNELS. There is one push button for each of the RCW/RSW manual initiation channels. The manual initiation data is acquired by the DLC that controls the ESF feature.

The ESF Manual Initiation Functions are not assumed in any accident or transient analyses for the ABWR. However, the Function is retained for overall redundancy and diversity of the ESF as required by the NRC in the plant licensing basis.

There is no Allowable Value for this Function since it is mechanically actuated based solely on the position of the manual initiation switches. Each channel of the Manual Initiation Function is required to be OPERABLE when the associated ESF feature is required to be OPERABLE.

9.c Suppression Pool Cooling Manual Initiation

The Manual Initiation push button channels introduce signals into the appropriate ESF feature logic to provide manual initiation capability that is redundant to the automatic initiation SENSOR CHANNELS. There is one push button for each of the suppression pool cooling manual initiation channels. The manual initiation data is acquired by the DLC that controls the ESF feature.

The ESF Manual Initiation Functions are not assumed in any accident or transient analyses for the ABWR. However, the Function is retained for

APPLICABLE SAFETY ANALYSIS, LCO, and APPLICABILITY (continued)

overall redundancy and diversity of the ESF as required by the NRC in the plant licensing basis.

There is no Allowable Value for this Function since it is mechanically actuated based solely on the position of the manual initiation switches. Each channel of the Manual Initiation Function is required to be OPERABLE when the associated ESF feature is required to be OPERABLE.

10.a, 10.e, 10.g, 13.a, and 14.a Isolation Initiation.

These Functions are the LOGIC CHANNELS that send initiation data to the OUTPUT CHANNELS for the various isolation valves. ~~There are two LOGIC CHANNELS in each division that contains isolation initiation.~~The channels provide actuation signals for each of the isolation valves in the same division. The sensor Functions for each of the isolation valves are as described in LCO 3.3.1.1, "SSLC Sensor Instrumentation".

~~Two~~ For Functions 10.a, 10.g, 13.a, and 14.a, one *LOGIC CHANNEL~~S (dual redundant SLUs)~~ must be OPERABLE in each division with isolation capability when the associated isolation Function is required to be OPERABLE. See LCO 3.3.1.1, "SSLC Sensor Instrumentation" for the basis and the divisions associated with each isolation function. A LOGIC CHANNEL is OPERABLE when it is capable of generating initiation data and transmitting it to the associated OUTPUT CHANNELs.*

Function 10.e is implemented using two DLCs with a final bypassable voter. The two DLCs, the voters, and the bypasses are treated as a separate channel. The channel is OPERABLE if both of the DLCs and the voters are OPERABLE, or if one of the two DLCs are OPERABLE with the second DLC bypassed so that the OPERABLE channel can initiate isolation action.

10.c & 10.d. Drywell Sump Drain Line LCW/HCW Radiation - High

The detectors are connected to the PRRM system which sends a trip signal to the division I ~~SLU pair~~ DLC.

11. Containment Isolation Manual Initiation

There is a push button in each division that provides containment isolation initiation. ~~Each divisional pushbutton has two contacts. Each contact is associated with only one of the redundant SLUs within a containment isolation division. Each of the contacts and its associated data transmission is considered to be one manual initiation channel.~~ Each divisional manual isolation pushbutton causes closure of all isolation valves in the division, except for RCIC. ~~There are two divisional manual pushbuttons associated with each isolated path with two active isolation valves. Either of the pushbuttons associated with a flow path causes the flow path to be isolated.~~

STD DEP T1 2.4-3

12.a RCIC Isolation Initiation.

These Functions are the LOGIC CHANNELS that send initiation data to the OUTPUT CHANNELS for the RCIC isolation valves. ~~There are two LOGIC~~

APPLICABLE SAFETY ANALYSIS, LCO, and APPLICABILITY (continued)

~~CHANNELS in each division that contains RCIC isolation initiation.~~ The channels provide actuation signals for each of the isolation valves in the same division. The sensor Functions for the RCIC isolation valves, except for RCIC Turbine Exhaust ~~Diaphragm~~ Pressure - High, are as described in LCO 3.3.1.1, "SSLC Sensor Instrumentation".

~~Two~~One LOGIC CHANNEL~~S (dual redundant SLUs)~~ must be OPERABLE in each RCIC isolation division (divisions I and II) when the associated isolation Function is required to be OPERABLE.

12.c. RCIC Isolation Manual Initiation

~~Each pushbutton has two contacts. Each contact is associated with only one of the redundant SLUs within a RCIC isolation division. Each of the contacts and its associated data transmission is considered to be one manual initiation channel.~~ Each divisional manual isolation pushbutton causes closure of all the RCIC isolation valves in the division. Either of the pushbuttons causes isolation of all isolated flow paths within RCIC system.

There is no Allowable Value for this Function since the division is mechanically actuated based solely on the position of the push buttons. ~~Two~~ One channel of the RCIC Manual Isolation Initiation Function ~~are~~ is required to be OPERABLE in each RCIC isolation division when RCIC isolation is required to be OPERABLE.

STD DEP T1 2.4-3

12.d. RCIC Turbine Exhaust ~~Diaphragm~~ Pressure - High

High turbine exhaust ~~diaphragm~~ pressure indicates that the pressure may be too high to continue operation of the RCIC turbine. ~~That is, one of two exhaust diaphragms has ruptured and pressure is reaching turbine casing pressure limits.~~ This isolation is for equipment protection and is not assumed in any transient or accident analysis for the ABWR. These instruments are included in the TS because of the potential for risk due to possible failure of the instruments preventing RCIC initiations.

~~The RCIC Turbine Exhaust Diaphragm Pressure - High data originates in four transmitters that are connected to the space between the rupture diaphragms on the turbine exhaust line. The division I and division II ESF SLU pairs each receive trip data from two of the turbine exhaust diaphragm pressure transmitters. Two of two isolation logic is used in each divisional SLU pair for this Function. Two channels of the RCIC Turbine Exhaust Diaphragm Pressure - High Functions are available in each of two divisions (Division I and division II) and are required to be OPERABLE to ensure that no single instrument failure can preclude the isolation function or cause a spurious isolation.~~

~~The Allowable Values are high enough to prevent damage to the turbines.~~

STD DEP T1 2.4-2 *1.d, 2.e, 3.d, 5.d, 6.b, 7.b, 8.b, 9.b, 10.b, 10.f, 10.h, ~~11.b,~~ 12.b, 13.b, 14.b and 15.b. ESF and Isolation Device Actuation.*

APPLICABLE SAFETY ANALYSIS, LCO, and APPLICABILITY (continued)

13.c. CUW Isolation on SLC Initiation

Isolation of the CUW System is required when the SLC System has been initiated to prevent dilution and removal of the boron solution by the CUW System (Reference 4). SLC System initiation signals originate from the two SLC pump start signals. The SLC pump A start signal is connected to a division I ~~SLU pair~~ DLC *and the SLC pump B signal to a division II ~~SLU pair~~* DLC*. The data is shared between division via suitable isolators. CUW isolation occurs when either pump is started.*

STD DEP T1 2.4-2 15.a. Feedwater Line Break Mitigation Initiation.

These Functions are the LOGIC CHANNELS that send initiation data to the OUTPUT CHANNELS for the Feedwater Line Break Mitigation Actuation (e.g., trip of the condensate pumps). The LOGIC CHANNEL for a specific condensate pump is in the same division as the condensate pump. One LOGIC CHANNEL must be OPERABLE when the associated condensate pump is required to be OPERABLE. The applicability basis for the Feedwater Line Break Mitigation are given in LCO 3.3.1.1, "SSLC Sensor Instrumentation." A LOGIC CHANNEL is OPERABLE when it is capable of generating device actuation data and transmitting it to the OUTPUT CHANNELS.

Feedwater line break mitigation initiation is required to be OPERABLE in MODES 1, 2 and 3 consistent with the Applicability of LCO 3.3.1.1, "SSLC Sensor Instrumentation."

STD DEP T1 2.4-2 ACTIONS

B.1~~, *B.2.1, and B.2.2*~~

This condition assures that appropriate actions are taken when one or more *~~of a redundant pair of~~ ESF LOGIC CHANNELS or one* or more ESF OUTPUT CHANNELS *~~of a redundant pair of manual initiation channels~~ is inoperable.~~ Placing the associated OUTPUT CHANNEL in bypass causes the logic to change from 2 out of 2 to 1 out of 1 so initiation capability is maintained. However, the ESF feature is more vulnerable to spurious actuation.~~*

The 1 hour Completion Time for B.1 is allowed for restoring the inoperable channel. The probability of an event requiring the Function coupled with an undetected failure in the associated redundant channel with the Completion Time is low. Also, redundant ESF features may provide adequate plant protection given the availability of the associated features. ~~*provides sufficient time for the operator to determine which OUTPUT CHANNELS are associated with the inoperable channel. Plant operation in this condition for the specified time does not contribute significantly to plant risk.*~~

~~*Since plant protection is maintained and the potential for a spurious trip is low because of the high reliability of the logic, operation in this condition for*~~

~~*an extended period is acceptable. Therefore, a Completion Time of 30 days is allowed for restoring the inoperable channel (Action B.2.1). The probability of an event requiring the Function coupled with an undetected failure in the associated redundant LOGIC CHANNEL in the Completion Time is quite low. Also, redundant ESF features may provide adequate plant protection given the unavailability of the associated features. The self-test capabilities of the SSLC provide a high degree of confidence that no undetected failures will occur within the allowable Completion Time.*~~

~~*Action B.2.2 provides an alternate to Action B.2.1. Verification of the OPERABILITY of any redundant feature(s) provides confidence that adequate plant protection capability is maintained. Action B.2.2 does not apply to features with no redundant alternate. The Completion Time for Action B.2.2 is as given for Action B.2.1.*~~

~~*Implementing either of the Actions B.2.1 or B.2.2 provides confidence that plant protection is within the design basis so no further Action is required.*~~

~~*These Actions apply*~~ This Action applies *to all* ECCS *LOGIC CHANNELS* and OUTPUT CHANNELS*, except ADS.*~~*, and the isolation initiation manual channels. They do not apply to the ADS LOGIC CHANNELS because they cannot be bypassed at the OUTPUT CHANNEL.*~~ This Action also applies to all ESF LOGIC CHANNELS and OUTPUT CHANNELS.

STD DEP 8.3-1 *C.1*

This Condition is provided to assure that appropriate action is taken for single or multiple inoperable SENSOR CHANNELS ~~*channels*~~ *that cause automatic or manual actuation of an ESF feature to become unavailable. However, automatic and manual initiation for redundant features are not affected.*

Action C.1 restores the intended plant protection capability. The 1 hour Completion Time for Action C.1 provides some amount of time to restore automatic or manual actuation before additional Required Actions are imposed.

This Action applies to

- ~~*- all LOGIC CHANNELS, except ADS*~~
- ~~*- isolation initiation manual channels*~~
- *Divisions I, II, & III Loss of Voltage* ~~*6.9*~~4.16 *kV and Degraded Voltage* ~~*6.9*~~4.16 *kV.*

D.1 and D.2

This Condition is provided to assure that appropriate action is taken for inoperable OUTPUT CHANNELS or an inoperable HPCF C diverse logic manual initiation channel. An inoperable OUTPUT CHANNEL makes the associated device (pump, valve, etc.) unable to perform its protective

action. ~~A failure in the HPCF C diverse logic manual channel causes a loss of its system level manual initiation capability.~~

Action D.1 applies to ~~all~~ OUTPUT CHANNELS~~, except ADS. ADS is not included because of the nature of the redundancy used in the ADS systems~~ and device actuation for DG actuation, SGTS actuation, RCW/RSW actuation, CAM actuation, CIV isolation, RCW Inside Drywell isolation, RCIC isolation, CUW isolation, and SD Cooling isolation. *Action D.2 applies to the isolation valves that can be closed without disrupting plant operation or jeopardizing plant safety*

E.1 and E.2

This Condition addresses SENSOR CHANNEL failures for isolation SENSOR CHANNEL Functions that have one or two channels. For these Functions a failure in the SENSOR CHANNEL causes loss of automatic initiation or the initiation logic becomes 1/1. However, manual initiation is still available.

Action E.1 requires restoration of the inoperable channel to OPERABLE status. Action E.2 provides an alternate ~~of closing the associated isolation valves which accomplishes the intended protective action~~ declaring the associated device(s) inoperable.

These Actions apply only to the Drywell Sump Drain Line LCW/HCW Radiation - High and CUW Isolation on SLC Initiation Functions since these are the isolation Functions with one ~~or two~~ SENSOR CHANNEL~~S~~.

F.1

This Condition is provided to assure that appropriate action is taken for ~~multiple~~ one or more *inoperable manual initiation channels ~~for Functions that have use 2/2 logic for manual initiation of the system or subsystem~~. The loss of* a manual initiation channel for *both* one channel and two *channel~~s~~* Functions *causes loss of the system manual initiation. However, automatic initiation is still available and the systems may still be manually operated using the individual device manual controls.*

This Action applies to all ECCS and ESF *manual initiation channels, except the ADS* and the HPCF C diverse logic*. ADS* manual initiation channels are addressed in Conditions H and I. HPCF C diverse logic manual initiation channel is addressed in Condition D.*~~ is not included because its manual initiation is different.~~*

G.1

If the specified actions for Conditions ~~A,~~ B, C, D, E *or ~~E~~ F are not met within the specified Completion Times the feature(s) associated with the inoperable channel must be declared inoperable. Declaring the associated feature inoperable will cause entry into the appropriate LCOs that address the feature so appropriate compensatory measures will be taken.*

STD DEP T1 3.4-1

H.1

This condition assures appropriate compensatory measures are taken for failures in ~~one of the two~~ an ADS OUTPUT CHANNEL~~S associated with one or more ADS valves~~ in one ADS division, an ADS LOGIC CHANNEL in one division, an ADS manual initiation channel in one division, an ATWS Manual ADS Inhibit channel in one division, or all of the ADS Division ~~I~~I/~~II~~II ECCS Pump Discharge Pressure – High (permissive) Functions in one division. For these failures the ADS Function is still available, but the redundancy is reduced, (i.e. logic is 1/1 instead of 1/2). The high pressure ECCS pumps are still capable of providing core cooling and inventory make up. In addition, there are manual controls for the relief solenoid on the SRVs that are independent of the ~~SSLC~~ ELCS ADS logic and devices. The relief solenoids do not share any signal processing devices with ADS and are powered from three divisional 125 VDC sources. Therefore, there is a high degree of diversity to protect against a small break LOCA.

Action H.1 restores the channel(s) to OPERABLE status. When two or more high pressure ECCS systems are OPERABLE there is a high degree of redundancy and diversity so operation is permitted for 7 days. If only one high pressure system is OPERABLE the Completion Time is reduced to 3 days. These Completion Times are acceptable because of the specified high reliability of the devices used in the ~~SSLC~~ ELCS logic and SRV manual relief, the redundancy in ADS valves (i.e. 8 ADS valves, 5 needed for accident mitigation), and the low probability of an event requiring ADS, coupled with a failure that would defeat a redundant ADS Function and a failure in all high pressure ECCS sub-systems, occurring within that time period.

This Action applies to the ADS LOGIC CHANNELS, ADS OUTPUT CHANNELS, ADS manual initiation channels, ATWS manual ADS inhibit channels, and the ADS Division I/II ECCS Pump Discharge Pressure – High (permissive) channels.

I.1

This condition assures that appropriate compensatory measures are taken for conditions of:

- *two divisions with one or more inoperable ADS LOGIC CHANNELS*
- *inoperable RCIC isolation SENSOR CHANNELS*
- two divisions with *one or more* inoperable *ADS ~~valves with both~~ OUTPUT CHANNELS ~~inoperable~~*
- *two divisions with one or more inoperable* ADS *manual* initiation *channels.*
- *two divisions with one or more inoperable ATWS manual ADS Inhibit channels*

For ADS, the LOGIC CHANNELS and OUTPUT CHANNELS *cannot be tripped or bypassed so the associated valves must be declared inoperable for these conditions. ~~The RCIC isolation SENSOR CHANNELS are 2/2 in each division which results in loss of automatic initiation in one division for any single channel failure.~~This condition is also entered if the required Action and associated Completion Time of Condition H is not met ~~(except for ECCS pump discharge pressure permissive)~~.*

This Action applies to the ADS LOGIC CHANNELS, the ADS OUTPUT CHANNELS, the ADS manual channels, the ATWS manual ADS Inhibit channels, and the RCIC Turbine Exhaust ~~Diaphragm~~ Pressure - High Functions.

K.1

Action K.1 restores at least three of the required SENSOR CHANNELS for the Function to the OPERABLE status. The completion time of 7 days is based on the low probability of undetected failures in both of the OPERABLE channels for the Function occurring in that time period. The self-test features of the ~~SSLC~~ ELCS*, NMS, and ~~EMS~~* ECF *provide a high degree of confidence that no undetected failure will occur.*

L.1

Action L.1 restores at least two of the required SENSOR CHANNELS for the Function to the OPERABLE status. The completion time of 24 hours is based on the low probability of undetected failures in the remaining OPERABLE channel for the Function occurring in that time period. The self-test features of the ~~SSLC~~ ELCS*, NMS, and ~~EMS~~* ECF *provide a high degree of confidence that no undetected failures will occur.*

M.1

This Action is also invoked if the Completion Times of Actions ~~H,~~ J, K, or L are not met.

SURVEILLANCE REQUIREMENTS

SR 3.3.1.4.3

A DIVISIONAL FUNCTIONAL TEST is performed on the LOGIC CHANNELS and SENSOR CHANNELS in each ESF division to provide confidence that the Functions will perform as intended. The test is performed by replacing the normal signal with a test signal as far upstream in the channel as possible within the constraints of the instrumentation design and the need to perform the surveillance without disrupting plant operations. See Section 1.1, "Definitions" for additional information on the scope of the test.

The devices used to implement the Functions are specified to be of high reliability and have a high degree of redundancy. Therefore, the ~~[92~~ 31*~~]~~ day frequency provides confidence that device actuation will occur when needed. This test overlaps or is performed in conjunction with the DIVISIONAL FUNCTIONAL TESTS performed under LCO 3.3.1.1, "SSLC Sensor Instrumentation" to provide testing up to the final actuating device.*

SURVEILLANCE REQUIREMENTS (Continued)

SR 3.3.1.4.4

The tests in the COMPREHENSIVE FUNCTIONAL TEST (CoFT) verify proper ~~SSLC~~ ELCS *system function, computer component function, software and hardware interactions, response times, and error handling. Error statistics, usage statistics, historical statistics, and various other measures are used to verify proper performance of the ~~SSLC~~* ELCS*. Successful completion of these tests establishes OPERABILITY of SENSOR CHANNELS, LOGIC CHANNELS, and OUTPUT CHANNELS.*

The software based ~~SSLC~~ ELCS *system contains many states, not all of which will occur over the life of the plant. The most important states are those that are required to mitigate accidents. Therefore, the CoFT focuses on usage testing, which exercises the overall system by simulating the input conditions under which the system is designed to perform, rather than coverage testing, which attempts to exercise all possible states of the system. Before plant start-up there is a high level of confidence that the ~~SSLC~~* ELCS *system will operate as specified due to the extensive inspections, tests, and analyses conducted during the ITAAC preoperational phases. During the plant operating life, the CoFT assures that the protective action equipment is within its specified performance* characteristics.

STD DEP 16.3-99

SR 3.3.1.4.6

A SENSOR CHANNEL CALIBRATION is a complete check of the instrument loop and the sensor. This test verifies a SENSOR CHANNEL responds to the measured parameter within the necessary range and accuracy. SENSOR CHANNEL CALIBRATION leaves the channel adjusted to account for instrument drifts between successive calibrations. Measurement error historical determinations must be performed consistent with the plant specific setpoint methodology. The channel shall be left calibrated consistent with the assumptions of the setpoint methodology. As noted, the calibration includes calibration of all parameters used to establish derived setpoints and all parameters used to automatically bypass a trip function.

~~*If the as found trip point (fixed or variable) is not within its Allowable Value, the plant specific setpoint methodology may be revised, as appropriate, if the history and all other pertinent information indicate a need for the revision. Calibration shall be provided that is consistent with the assumptions of the current plant specific setpoint methodology.*~~

The 18 month frequency is based on the ABWR expected refueling interval and the need to perform this Surveillance under the conditions that apply during a plant outage. The Frequency is adequate based on the specified low drift of the devices used to implement the Functions covered by this LCO.

STD DEP T1 3.4-1

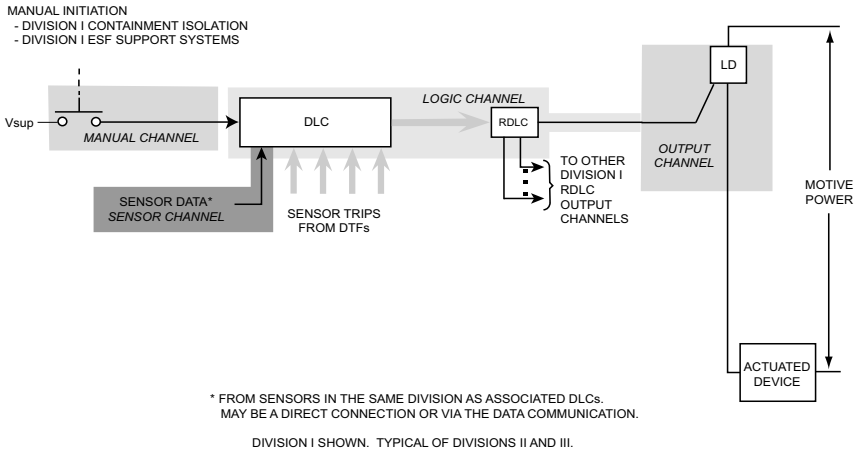

Figure B 3.3.1.4-1 ESF Actuation Channel Structure for Containment Isolation, ESF Support

STD DEP T1 3.4-1

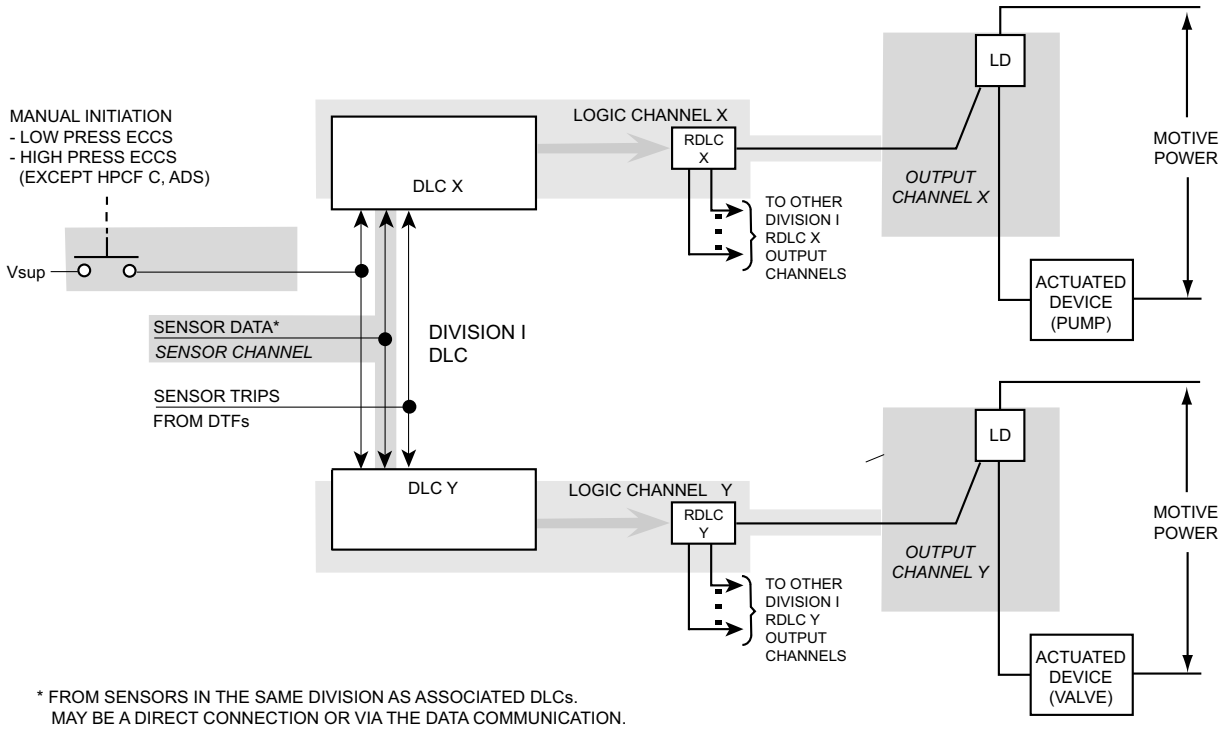

DIVISION I SHOWN. (TYPICAL OF DIVISION II AND III LPFL, HPCF B, AND RCIC).

Figure B 3.3.1.4-2 ESF Actuation Channel Structure for LPFL B, C, HPCF B, RCIC

STD DEP T1 3.4-1

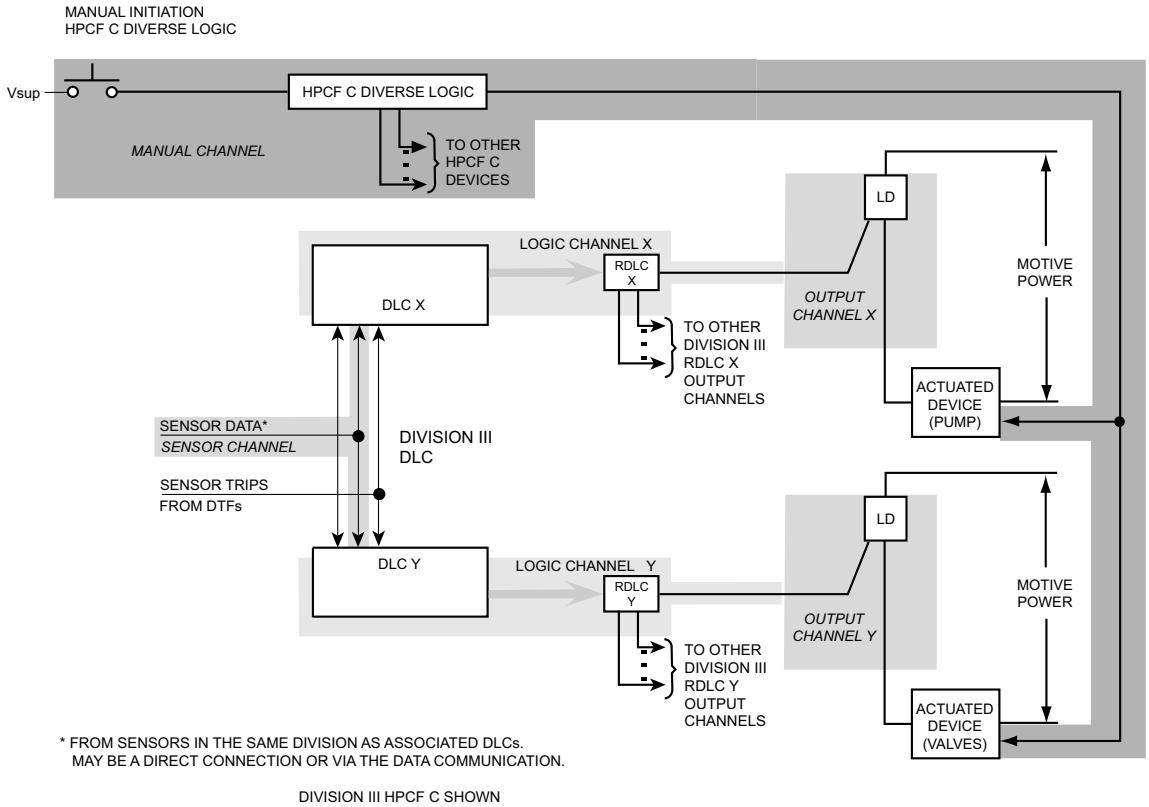

Figure B 3.3.1.4-3 ESF Actuation Channel Structure for HPCF C

STD DEP T1 3.4-1

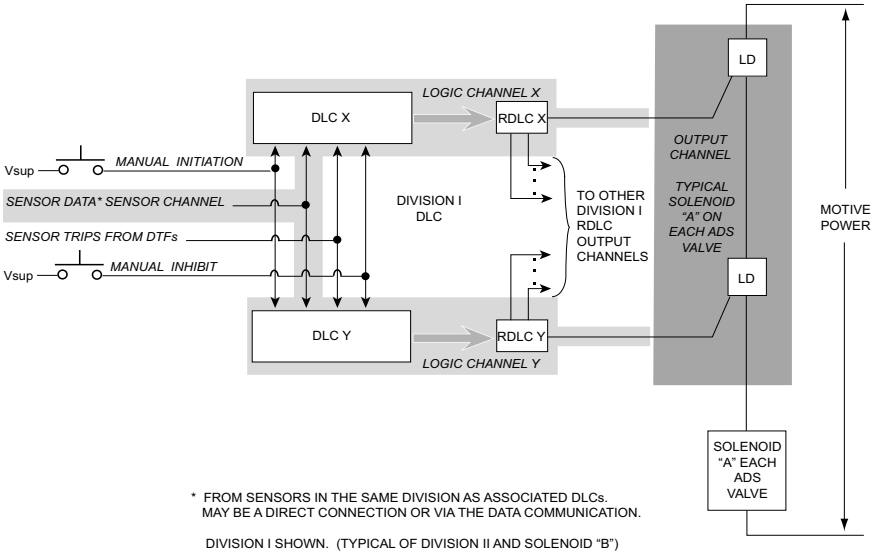

Figure B 3.3.1.4-4 ESF Actuation Channel Structure for ADS

STD DEP T1 3.4-1

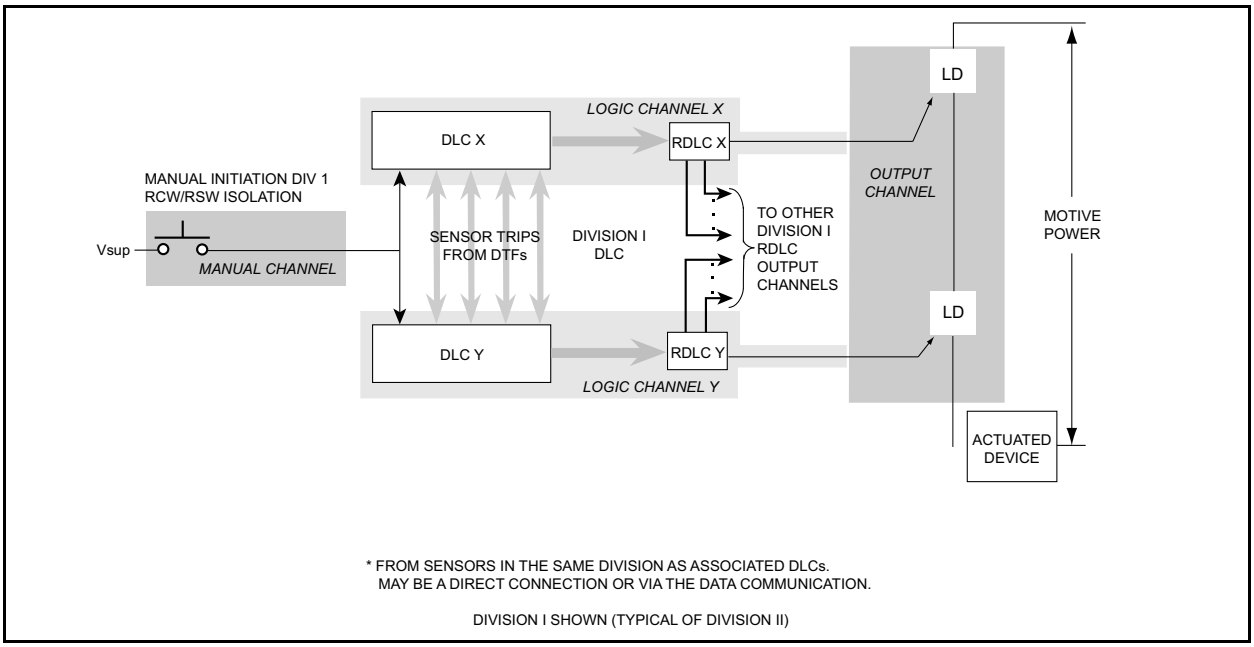

Figure B 3.3.1.4-5 ESF Actuation Channel Structure for RCW/RSW Isolation

B 3.3 INSTRUMENTATION

B 3.3.2.1 Startup Range Neutron Monitor (SRNM) Instrumentation

BASES

The information in this section of the reference ABWR DCD, including all subsections, is incorporated by reference with no departures, but the following site specific supplements. The site specific supplements partially address COL License Information Item 16.1.

ACTIONS

E.1

With two required SRNMs inoperable in MODE 5, the ability to detect local reactivity changes in the core during refueling is unavailable. Required Actions D.1, D.2, and D.3 are already applicable and continue to be applicable. Required Action E.2 modifies Required Action D.3 to require immediate initiation of action to restore one of the inoperable required SRNMs to OPERABLE status instead of requiring initiation of action within the former Completion Time of ~~[7]~~ days.

SURVEILLANCE REQUIREMENTS

The SRs for each SRNM Applicable MODE or other specified condition are found in the SRs column of Table 3.3.2.1-1.

SR 3.3.2.1.1

Performance of the CHANNEL CHECK ensures that a gross failure of instrumentation has not occurred between CHANNEL FUNCTIONAL TESTS. A CHANNEL CHECK is a comparison of the parameter indicated on one channel to the same parameter indicated on other similar channels. It is based on the assumption that instrument channels monitoring the same parameter should read approximately the same value. Significant deviations between the instrument channels could be an indication of excessive instrument drift or other faults in one of the channels.

Agreement criteria are determined by the plant staff, based on a combination of the channel instrument uncertainties, including indication and readability. If a channel is outside the match criteria, it may be an indication that the instrument has drifted outside its limit.

The specified high reliability of each SRNM channel provides confidence that a channel failure will be rare. However, a surveillance interval of ~~[12]~~ hours is used to provide confidence that gross failures that do not activate an annunciator or alarm will be detected within the specified Frequency. The CHANNEL CHECK supplements less formal, but more frequent, checks of channels during normal operational use of the displays associated with the channels required by the LCO.

SURVEILLANCE REQUIREMENTS (Continued)

SR 3.3.2.1.4 and SR 3.3.2.1.5

Performance of a CHANNEL FUNCTIONAL TEST demonstrates the associated channel will function properly.

SR 3.3.2.1.4 is required in MODE 5, and the [7] day Frequency ensures that the channels are OPERABLE while core reactivity changes could be in progress. This Frequency is reasonable, based on the reliability of the devices used in the SRNM and on other Surveillances (such as a CHANNEL CHECK) that ensure proper functioning between CHANNEL FUNCTIONAL TESTS.

SR 3.3.2.1.5 is required in MODE 2 with the APRMs downscale and in MODES 3 and 4. Since core reactivity changes do not normally take place in these modes, the Frequency has been extended from [7] days to [31] days. The [31] day Frequency is based on the reliability of the processing devices used and on other Surveillances (such as CHANNEL CHECK) that ensure proper functioning between CHANNEL FUNCTIONAL TESTS.

B 3.3 INSTRUMENTATION

B 3.3.3.1 Essential ~~*Multiplexing System*~~ Communication Function ~~*EMS*~~ (ECF)

BASES

The information in this section of the reference ABWR DCD, including all subsections, is incorporated by reference with the following departure and site specific supplement. The site specific supplement partially addresses COL License Information Item 16.1.

STD DEP T1 3.4-1

BACKGROUND

The ~~*EMS*~~ ECF *is a* set of ~~*data collection and*~~ *data distribution* ~~*system*~~functions *that provide*~~*s*~~ *plant parameter data* ~~*collection and*~~ *distribution for use by the* individual *safety systems in providing protective action. The* ~~*EMS*~~ ECF is implemented through the use of divisionally dedicated networks and/or data links provided with the safety related digital system platforms. ~~*consists of remote multiplexing units (RMU), Control Room Multiplexing units (CMU), and and a segmented dual redundant data transmission path. The transmissions paths are reconfigurable so that most data transmission failures effect only one segment in one of the redundant paths*~~.

The ~~*EMS*~~ ECFs ~~*is comprised of*~~ are separated in *four independent divisions (Div. I, II, III, IV).* ~~*Strategically located RMUs gather data from plant sensors, convert it to serial digital data, and*~~ The ECF acquires data from remote process sensors and discrete devices located within the plant, and *transmit*s *the data to the* safety related instrumentation and control platforms of the *Safety System Logic and Control (SSLC)* ~~*Digital Trip Modules (DTMs), Trip Logic Units (TLU) or Safety Logic Units (SLU)*~~ ~~*system*~~ *over* ~~*dual*~~ *redundant optical data transmission paths.* The *SSLC* platforms process that data according to required system logic protocols to calculate control signals. The ~~*RMUs also receive data representing the desired actions for controlled devices and delivers it to the appropriate OUTPUT CHANNEL. The OUTPUT CHANNEL converts the data to a signal level suitable for the controlled device.*~~ECF distributes the resulting control signals to the final actuators of the *supported systems'* driven equipment. The ECF is separated from the non-safety related Non-Essential Communication Function (NECF) through the use of isolating transmission medium and buffering devices.

The equipment implementing the ECF features ~~*an automatic self-test*~~self-diagnostics and ~~*automatically*~~ accommodates a single ECF failure (e.g., cable break or device failure) within a division without loss of the ECF. The ECF continues normal function after an error is detected with no interruption in data communication. Self-diagnostics run continuously and faults are indicated in the main control room. Loss of communications in an entire division does not cause transient or erroneous data to occur at system outputs, but may cause a loss of ability to control equipment in that division. ~~*includes a variety of self test and monitoring features. The self test checks the health of the*~~

~~*microprocessor, RAM, ROM, communications, data transmission segments, and software. A hard failure will activate an alarm and provide fault indication to the board level.*~~

~~*Soft failures (i.e., transient) are logged to provide maintenance information. Reconfiguration status after a segment failure also activates an alarm.*~~*The* ~~*dual*~~ *redundant data transmission paths* within an SSLC division *provide communication between* ~~*the RMUs and CMUs*~~ SSLC equipment and remote process sensors and discrete devices located within the plant ~~*SSLC*~~, and between SSLC equipment and the final actuators of the supported systems' driven equipment*. The paths are* ~~*reconfigurable*~~ redundant *so that communication is maintained as long as there is one OPERABLE path between* ~~*all pairs of multiplexers*~~ the equipment implementing the ECF*. One path between* ~~*any pair of units*~~ the equipment implementing the ECF *is called a "segment" in this LCO.*

A data transmission segment is OPERABLE when communication between ~~*any pair of multiplexers*~~ equipment implementing the ECF *can occur over the segment. This requires the* ~~*line drivers and line receivers on both ends*~~ equipment implementing the ECF *to be OPERABLE and the path between the* ~~*units*~~ equipment (e.g., segment) *to be OPERABLE. The* ~~*EMS*~~ ECF *must also be capable of providing the specified maximum throughput and the data error rates must be within specified limits for it to be considered OPERABLE.*

APPLICABLE SAFETY ANALYSIS, LCO and APPLICABILITY

Some portion of the ~~*EMS*~~ ECF *is required to be operable in all MODES since there are one or more safety systems that acquire data from the* ~~*EMS*~~ ECF *in all modes.* ~~*The applicable safety analysis for the various portions of the EMS ECF are the analysis that apply to the Functions that acquire data from the EMS ECF.*~~ *The signal acquisition and conversion* ~~*portions of the ECF*~~ functions *are adequately covered by the LCOs for the systems that acquire and/or transmit data over the* ~~*EMS*~~ ECF*. Therefore, this LCO addresses only the data transmission portion of the* ~~*EMS*~~ ECF*.*

The ~~*Essential Multiplexing System (EMS)*~~ ECF *does not directly generate any trip functions so there* ~~*are*~~ is *no specific Allowable Value for the* ~~*EMS*~~ ECF *since the effect of any* ~~*EMS*~~ ECF *processing is included in the allowable values for the Functions in systems that utilize the* ~~*EMS*~~ ECF*.*

ACTIONS

A Note has been provided to modify the ACTIONS related to ~~*EMS*~~ ECF*. Section 1.3, Completion Times, specifies that once a Condition has been entered, subsequent trains, subsystems, components, or variables expressed in the Condition, discovered to be inoperable or not within limits, will not result in separate entry into the Condition. Section 1.3 also specifies that Required Actions of the Condition continue to apply for each additional failure, with Completion Times based on initial entry into the Condition. However, the Required Actions for multiple inoperable* ~~*EMS*~~ ECF *data transmission paths provide appropriate compensatory measures. As such, a Note has been provided that allows separate Condition entry for each inoperable* ~~*EMS*~~ ECF *division.*

A.1

This Condition address the situation where there is some loss of data transmission redundancy in one ~~EMS~~ ECF division but a complete data transmission path is maintained so the systems serviced by the ~~EMS~~ ECF can acquire the needed data.

B.1

This Condition address the situation where there is some loss of data transmission redundancy in more than one ~~EMS~~ ECF division but complete data transmission paths are maintained in all divisions. The ~~EMS~~ ECF performs as intended and a single failure will not cause loss of data transmission capability in more than one division.

This LCO is included to assure that any degradation in data transmission redundancy in more than one ~~EMS~~ ECF division will be repaired on a reasonable schedule. The Completion Time is based on the specified high reliability of the individual data transmission segments and the limited number of devices involved in each segment. Also, the self ~~test~~ diagnostics will detect most additional data transmission path failures.

C.1

If the required action of condition B is not accomplished within the required Completion Time, then additional ~~EMS~~ ECF monitoring (Action C.1) is required to provide confidence that adequate data transmission capability is maintained. The Completion Times for C.1 are adequate to detect an inoperable ~~EMS~~ ECF division soon enough so that the impact of any additional failures on plant risk is negligible.

D.1

When one or more ~~EMS~~ ECF divisions become inoperable then the Functions and/or Features associated with the ~~EMS~~ ECF become unavailable. The loss of one or more ~~EMS~~ ECF data transmission divisions is similar to the loss of multiple SENSOR CHANNELS in LCO 3.3.1.1, "SSLC Sensor Instrumentation" or LOGIC CHANNELS in LCO 3.3.1.2, "RPS and MSIV Actuation", and 3.3.1.4, "ESF Actuation Instrumentation"..

A note is included to exclude this Action from the MODE change restriction of LCO 3.0.4. The ~~EMS~~ ECF must be OPERABLE in all MODES and other conditions while declaring the Features and Functions associated with the inoperable ~~EMS~~ ECF division may require entry into a different MODE or other condition.

SURVEILLANCE REQUIREMENTS

SR 3.3.3.1.1

The operability of the ~~EMS~~ ECF *data transmission segments should be periodically confirmed to assure that an adequate degree of redundancy is maintained. This SR is included to provide confidence that all data transmission segments are OPERABLE. The test consists of assuring that the two data transmission paths between~~ all connected pairs of multiplexers~~* the equipment implementing the ECF *are OPERABLE.~~ The test assures that the line drivers and line receivers on both ends of each of the redundant paths between the multiplexers equipment implementing the ECF are is OPERABLE. The test must also assure the ability to reconfigure the data transmission paths. Reconfiguration is accomplished by cross connecting the line drivers and line receivers to interconnecting the data transmission paths. The inability to reconfigure shall be treated as a loss of a single segment (i.e., Condition A).~~*

The ~~EMS~~ ECF *data transmission segments are constructed from a few highly reliable devices and the loss of segments while maintaining data transmission integrity does not degrade plant safety. Therefore, a frequency of [~~92~~ 31] days is adequate.~~ The EMS ECF site test will automatically detect most data transmission errors.~~*

SR 3.3.3.1.2

The 18 month frequency is based on the ABWR expected refueling interval and the need to perform this Surveillance under the conditions that apply during a plant outage to reduce the potential for an unplanned transient if the Surveillance were performed with the reactor at power. The specified high reliability of the devices used in the ~~EMS~~ ECF *combined with self tests intended to detect ~~EMS~~* ECF *degradation provide confidence that this frequency is adequate.*

B 3.3 INSTRUMENTATION

B 3.3.4.1 Anticipated Transient Without Scram (ATWS) and End of Cycle Recirculation Pump Trip (EOC-RPT) Instrumentation

BASES

The information in this section of the reference ABWR DCD, including all subsections and figures, is incorporated by reference with the following departures and site specific supplements. The site specific supplements partially address COL License Information Item 16.1.

STD DEP T1 3.4-1 (All)
STD DEP 16.3-55
STD DEP 16.3-99

BACKGROUND

The ATWS-ARI Functions are included in the Recirculation Flow Control (RFC) system, the Rod Control and Information System (RCIS), and in a separate ATWS-ARI confirmatory logic device included specifically for ATWS-ARI Functions. The RFC is a triple redundant microprocessor system, the RCIS is a dual redundant microprocessor-based system, and the confirmatory logic device uses hardware (i.e. not microprocessor based) logic. The data needed for the ATWS-ARI recirculation runback Functions is acquired from other systems using suitable isolation. These systems are completely independent of and diverse to the RPS. The data used is:

- *Four independent low Level 2 discrete trip data from the ECCS portion of the ~~SSLC~~* ELCS *to the RFC.*
- *Three independent discrete data representations of reactor pressure from the Steam Bypass and Pressure Control (SB&PC) system to the RFC.*
- *Four ~~independent~~* channels of *scram follow discrete trip data from the ~~ECCS portion of the SSLC~~* Actuators for Scram Air Header Dump Valves *to the RCIS and to the FMCRD Insertion confirmatory logic.*

The RPT Functions are included in the Recirculation Flow Control (RFC) system. The RFC system is a triple redundant microprocessor based system with the data needed by the RPT Functions acquired from other systems using suitable isolation. The data used by the function is:

- *Three independent low Level 3 discrete trip data from the Feedwater Control (FWC) System for the ATWS-RPT.*
- *Four independent low Level 2 discrete trip data from the ECCS portion of the ~~SSLC~~* ELCS *for the ATWS-RPT.*
- *Three independent data representations of high reactor pressure from the Steam Bypass and Pressure Control (SB&PC) system for the ATWS-RPT.*

BACKGROUND (continued)

- *Four independent composite discrete data values which are a trip state data value when either a Turbine Stop Valve-Closure or Turbine Control Valve Fast Closure, Trip Oil Pressure-Low scram initiation occurs. The data is received from the ~~RPS portion of the SSLC~~ RTIS and is used for the EOC-RPT. The logic for these signals is described in the SSLC Sensor Instrumentation LCO (LCO 3.3.1.1).*

Independent RPT signals are generated in all three RFC subsystems using 2/4 or 2/3 logic, as appropriate. RPT data from all three RFC subsystems are transmitted to the RIP Adjustable Speed Drives (ASD). The ASDs use dual 2/3 logics to implement the trip and include an adjustable delay on the trip actuation signals to the load interrupters.

APPLICABLE SAFETY ANALYSIS, LCO, and APPLICABILITY

1. Feedwater Reactor Vessel Water Level - Low, Level 3

The Feedwater Reactor Vessel Water Level - Low, Level 3 data originates from three level transmitters that sense the difference between the pressure due to a constant column of water (reference leg) and the pressure due to the actual water level (variable leg) in the vessel. Data from the three level transmitters are received by the three FWC controllers via the data communication function ~~via the three plant multiplexing systems~~. Level 3 trip data is generated in the FWC and the ~~voted~~ results from all three FWC controllers is transmitted to each of the three RFC controllers which use 2/3 logic to create RPT data.

2. Reactor Vessel Water Level - Low, Level 2

Reactor Vessel Water Level - Low, Level 2 trip data is received from all four ~~SSLC~~ ELCS divisions by each of the RFC controllers. The ATWS trip logic will generate a trip data value when two of the four are in a tripped state. A trip will occur when needed and spurious trips cannot occur if three of the four Level 2 data values are valid. The basis for this function is as described in the SSLC Sensor Instrumentation LCO (LCO 3.3.1.1).

Four channels of Reactor Vessel Level -Low, Level 2 are available and three are required to be OPERABLE when ATWS is required to be OPERABLE to ensure that no single instrument failure can preclude an ATWS-RPT from this Function on a valid signal. This Function is considered to be OPERABLE when a Level 2 trip signal originating in each of the ~~SSLC~~ ELCS channels is received by all three of the RFC controllers.

3. SB&PC Reactor Steam Dome Pressure - High

The SB&PC Reactor Steam Dome Pressure - High data originates from three pressure transmitters that monitor pressure in the reactor steam dome. Data from the three transmitters are received by the three SB&PC controllers via the plant ~~multiplexing~~ data communication function ~~systems~~. Data values for all three sensors are received by each of the three RFC controllers which use 2/3 logic to create ATWS-RPT data.

APPLICABLE SAFETY ANALYSIS, LCO, and APPLICABILITY (continued)

4. EOC-RPT Initiation

The EOC-RPT initiation signal is a composite signal received from the ~~SSLC~~ RTIS. The ~~allowable values,~~ applicable safety analysis~~,~~ and applicability of this Function ~~is~~ are as described in the SSLC Sensor Instrumentation LCO (LCO 3.3.1.1) for the Turbine Stop Valve-Closure and Turbine Control Valve Fast Closure, Trip Oil Pressure-Low Functions.

Four channels of Turbine Steam Flow Rapid Shutoff EOC-RPT are available and three are required to be OPERABLE to provide confidence that no single instrument failure can preclude an EOC-RPT from this Function on a valid signal. This Function is considered to be OPERABLE when an EOC-RPT trip signal originating in each of the four ~~SSLC~~ RTIS division channels is received by all three of the RFC controllers.

6. Adjustable Speed Drive Pump Trip Actuation

The trip actuation devices in the ASD are required to be operable in order to complete the RIP trip Function. Each ASD uses signals from the RPT Function in all three of the RFC controllers. A trip condition from any two of the controllers will cause a trip of the associated RIP. Three channel~~s~~ of pump trip actuation per ASD must be OPERABLE when ATWS mitigation or EOC-RPT is required to be OPERABLE to provide confidence that no single instrument failure can preclude an RPT from this Function on a valid signal.

ACTIONS

F.1 and F.2

Required Action F.1 is intended to ensure that appropriate actions are taken for if the required Actions and associated Completion Times for the EOC-RPT Functions are not met. Required Action F.1 requires the MCPR limit for inoperable EOC-RPT, as specified in the COLR, to be applied, which restores the MCPR margin to within the limits assumed in the safety analysis.

Alternately the power level may be reduced to below the applicability of the EOC-RPT for the Function associated with the EOC-RPT (Required Action F.2).

The ~~[2]~~ hour Completion Time to implement the Required Actions is sufficient for the operator to determine which action is appropriate and to take corrective action, and takes into account the specified high reliability of the devices used to implement the EOC-RPT and the low likelihood of an event requiring actuation of the EOC-RPT instrumentation during this period.

G.1

This required Action assures that appropriate compensatory measures are taken for inoperable channels in Functions with one or two channels.

Because of the low probability of an event requiring these Functions, ~~[24]~~ hours is provided to restore the inoperable functions.

SURVEILLANCE REQUIREMENTS

STD DEP 16.3-99 *SR 3.3.4.1.2*

A CHANNEL FUNCTIONAL TEST is performed on each required channel to ensure that the entire channel will perform the intended function.

~~*If the as found trip point is not within its required Allowable Value, the plant specific setpoint methodology may be revised, as appropriate, if the history and all other pertinent information indicate a need for the revision. The as-left trip point shall be consistent with the assumptions of the current plant specific setpoint methodology.*~~

The frequency of ~~[92~~ 31~~]~~ days is based on the specified high reliability and redundancy of the devices used to implement the Functions, the specified low drift of the devices and the signal validation tests that are automatically and continuously performed on the channels. This surveillance for the Reactor Water Level - Low, Level 2, and Turbine Steam Flow Rapid Shutoff Functions must be performed in conjunction with the equivalent surveillances in the SSLC Sensor Instrumentation LCO (LCO 3.3.1.1).

STD DEP 16.3-99 *SR 3.3.4.1.3*

A CHANNEL CALIBRATION is a complete check of the instrument processing channel and the sensor. This test verifies that the channel responds to the measured parameter within the specified range and accuracy. CHANNEL CALIBRATION leaves the channel adjusted to account for instrument drifts between successive calibrations. Measurement and setpoint error historical determinations must be performed consistent with the plant specific setpoint methodology. The channel shall be left calibrated consistent with the assumptions of the setpoint methodology.

~~*If the as found setpoint is not within its required Allowable Value, the plant specific setpoint methodology may be revised, as appropriate, if the history and all other pertinent information indicate a need for the revision. The setpoint shall be left set consistent with the assumptions of the current plant specific setpoint methodology.*~~

STD DEP 16.3-55 SR 3.3.4.1.5

This SR ensures that the individual channel response times are less than or equal to the maximum values assumed in the accident analysis. The ~~EOC~~ RPT SYSTEM RESPONSE TIME acceptance criteria are included in Reference 5.

SR 3.3.4.1.7

A CHANNEL FUNCTIONAL TEST is performed on each manual ATWS ARI channel to ensure that the entire manual trip channel will operate as intended.

This function uses a minimum of components, and the components have been proven highly reliable through operating experience. However, a relatively short surveillance interval of ~~[7]~~ days is used since availability of

manual ATWS-ARI is important for providing a diverse means of inserting all of the control rods and the logic is 2/2. The probability of an event requiring manual ATWS-ARI coupled with a failure of one of the ATWS ARI channels within this time period is very low.

STD DEP T1 3.4-1

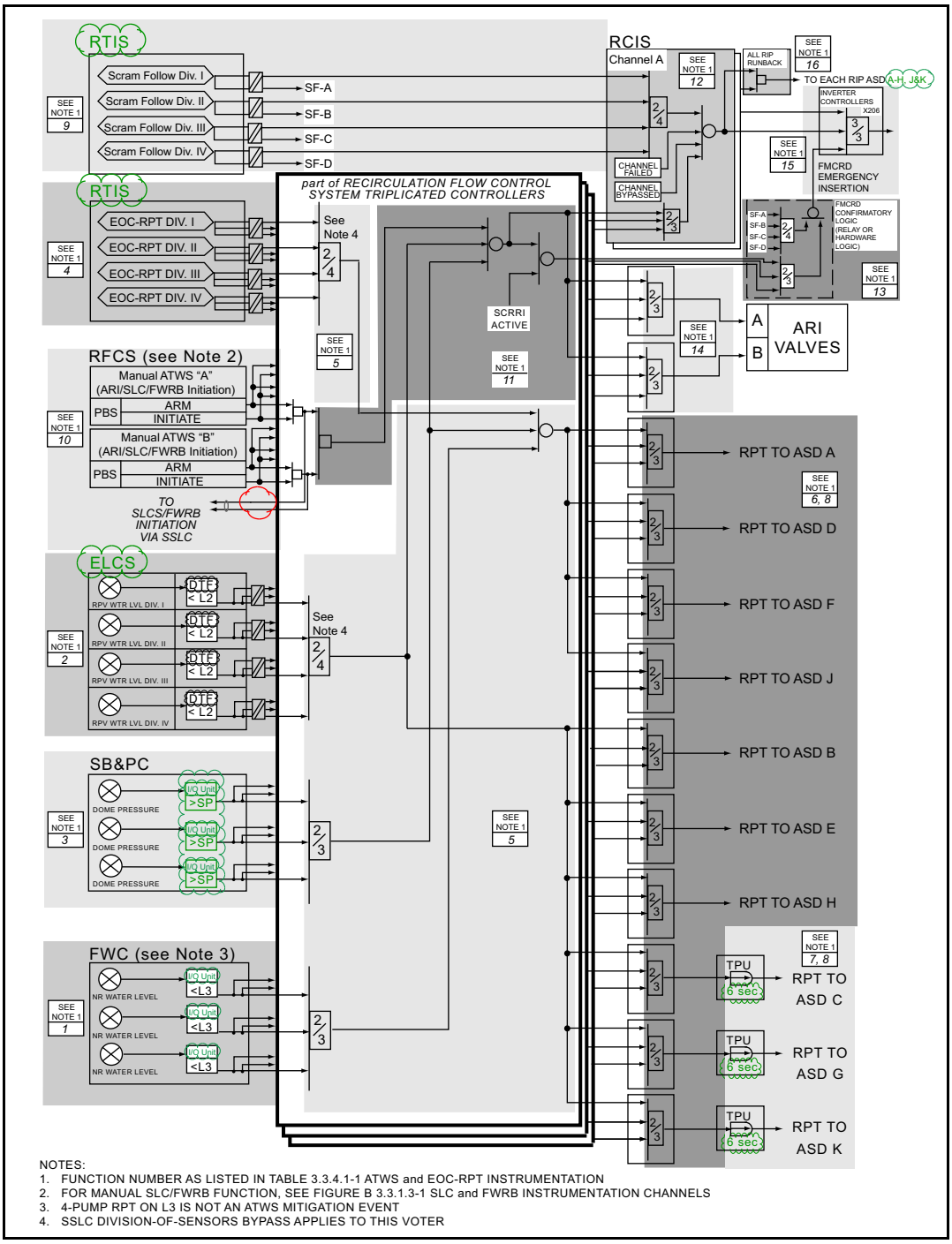

NOTES:
1. FUNCTION NUMBER AS LISTED IN TABLE 3.3.4.1-1 ATWS and EOC-RPT INSTRUMENTATION
2. FOR MANUAL SLC/FWRB FUNCTION, SEE FIGURE B 3.3.1.3-1 SLC and FWRB INSTRUMENTATION CHANNELS
3. 4-PUMP RPT ON L3 IS NOT AN ATWS MITIGATION EVENT
4. SSLC DIVISION-OF-SENSORS BYPASS APPLIES TO THIS VOTER

Figure B 3.3.4.1-1 ATWS and EOC-RPT Instrumentation Channels

B 3.3 INSTRUMENTATION

B 3.3.4.2 Feedwater Pump and Main Turbine Trip Instrumentation

BASES

The information in this section of the reference ABWR DCD, including all subsections, is incorporated by reference with the following departures and site specific supplement. The site specific supplement partially addresses COL License Information Item 16.1.

STP DEP 10.4-5
STD DEP 16.3-97
STD DEP 16.3-99
STD DEP 16.3-104

BACKGROUND

The feedwater pump *and main turbine trip instrumentation is designed to detect a potential failure of the Feedwater Level Control System that causes excessive feedwater flow.*

STD DEP 10.4-5

With excessive feedwater flow, the water level in the reactor vessel rises toward the high water level, Level 8 reference point, causing the trip of the ~~two~~ four *feedwater pump adjustable speed drives (ASDs) and the main turbine.*

Reactor Vessel Water Level – High, Level 8 signals are provided by level sensors that sense the difference between the pressure due to a constant column of water (reference leg) and the pressure due to the actual water level in the reactor vessel (variable leg). Three channels of Reactor Vessel Water Level – High, Level 8 instrumentation provide input to a two-out-of-three initiation logic that trips the ~~two~~ four *feedwater pump ASDs and the main turbine. The channels include electronic equipment (e.g., digital trip logic) that compares measured input signals with pre-established setpoints. When the setpoint is exceeded, the channel outputs a trip signal, which then outputs a main turbine and feedwater pump ASD trip signal to the trip logic.*

APPLICABLE SAFETY ANALYSES

The feedwater pump *and main turbine trip instrumentation is assumed to be capable of providing a* feedwater pump and main *turbine trip in the design basis transient analysis for a feedwater controller failure, maximum demand event (Ref. 1). The Level 8 trip indirectly initiates a reactor scram and EOC-RPT from the main turbine trip (above 40% RTP) and trips the feedwater pumps, thereby terminating the event. The reactor scram EOC-RPT mitigates the reduction in MCPR.*

APPLICABILITY

The feedwater pump *and main turbine trip instrumentation is required to be OPERABLE at ≥ 25% RTP to ensure that the fuel cladding integrity Safety Limit and the cladding 1% plastic strain limit are not violated during the feedwater controller failure, maximum demand event.*

ACTIONS

A Note has been provided to modify the ACTIONS related to the *feedwater* pump *and main turbine trip instrumentation channels. Section 1.3, Completion Times, specifies that once a Condition has been entered, subsequent trains, subsystems, components, or variables expressed in the Condition, discovered to be inoperable or not within limits, will not result in separate entry into the Condition. Section 1.3 also specifies that Required Actions of the Condition continue to apply for each additional failure, with Completion Times based on initial entry into the Condition. However, the Required Actions for inoperable feedwater and main turbine trip instrumentation channels provide appropriate compensatory measures for separate inoperable channels. As such, a Note has been provided that allows separate Condition entry for each inoperable feedwater* pump *and main turbine trip instrumentation channel.*

B.1

With two or more channels inoperable, the feedwater pump *and main turbine trip instrumentation cannot perform its design function (feedwater* pump *and main turbine trip capability is not maintained). Therefore, continued operation is only permitted for a 72 hour period, during which feedwater* pump *and main turbine trip capability must be restored. The trip capability is considered maintained when sufficient channels are OPERABLE or in trip such that the feedwater* pump *and main turbine trip logic will generate a trip on a valid signal. This requires two channels to be OPERABLE or in trip. If the required channels cannot be restored to OPERABLE status or placed in trip, Condition C must be entered and its Required Action taken.*

C.1

With the required channels not restored to OPERABLE status or placed in trip, THERMAL POWER must be reduced to < 25% RTP within 4 hours. As discussed in the Applicability section of the Bases, operation below 25% RTP results in sufficient margin to the required limits, and the feedwater pump *and main turbine trip instrumentation is not required to protect fuel integrity during the feedwater controller failure, maximum demand event. The allowed Completion Time of 4 hours is based on operating experience to reduce THERMAL POWER to < 25 % RTP from full power conditions in an orderly manner and without challenging plant systems.*

SURVEILLANCE REQUIREMENTS

SR 3.3.4.2.2

STD DEP 16.3-99

A CHANNEL FUNCTIONAL TEST is performed on each required channel to ensure that the entire channel will perform the intended function.~~ If the as found setpoint is not within its required Allowable Value, the plant specific setpoint methodology may be revised, as appropriate, if the history and all other pertinent information indicate a need for the revision. The setpoint shall be left set consistent with the assumptions of the current plant specific setpoint methodology.~~

STD DEP 16.3-104

The Frequency of ~~[92~~ 31*~~]~~ days is based on the* specified high reliability, redundancy and low drift of the devices used to implement the Feedwater Pump and Main Turbine Trip Function. In addition, the self-test features of the Feedwater Pump and Main Turbine Trip Instrumentation provide confidence that most failures that occur between surveillances will be automatically detected ~~*system capability to automatically perform self-tests and diagnostics*~~*.*

STD DEP 16.3-99

SR 3.3.4.2.3

SENSOR CHANNEL CALIBRATION is a complete check of the instrument loop and the sensor. This test verifies the channel responds to the measured parameter within the necessary range and accuracy. SENSOR CHANNEL CALIBRATION leaves the channel adjusted to account for instrument drifts between successive calibrations. Measurement and setpoint error historical determinations must be performed consistent with the plant specific setpoint methodology. The channel shall be left calibrated consistent with the assumptions of the setpoint methodology.

~~*If the as found setpoint is not within its required Allowable Value, the plant specific setpoint methodology may be revised, as appropriate, if the history and all other pertinent information indicate a need for the revision. The setpoint shall be left set consistent with the assumptions of the current plant specific setpoint methodology.*~~

[This page intentionally left blank]

B 3.3 INSTRUMENTATION

B 3.3.5.1 Control Rod Block Instrumentation

BASES

The information in this section of the reference ABWR DCD, including all subsections, is incorporated by reference with the following departures and site specific supplements. The site specific supplements partially address COL License Information Item 16.1.

STD DEP T1 3.4-1
STD DEP 16.3-66
STP DEP 16.3-67
STD DEP 16.3-99
STD DEP 16.3-101
STD DEP 16.3-102

BACKGROUND

The ATLM and RWM are subsystems of the Rod Control and Information System (RCIS). The RCIS is a non-safety system (category 3) but is made up of dual redundant channels to assure high availability. Both channels independently acquire all of the required data and perform identical functions. The RCIS functions are implemented on microprocessors with a high degree of segmentation within the system. The data needed by the RCIS is acquired from ~~the Essential Multiplexing System~~ ~~Essential Communication Function (ECF) with suitable isolators,~~ the RCIS ~~multiplexing system~~ Data Communication Function (DCF)*, or the ~~Non Essential Multiplexing System~~* Plant Data Network (PDN)*. The rod block logic is arranged so that a rod block from either channel will prevent rod withdrawal.*

The thermal limits information calculated in the ~~process~~ plant *computer is based on various process parameters~~ measured acquired by the process computer~~.*

STD DEP 16.3-66

APPLICABLE SAFETY ANALYSIS, LCO, and APPLICABILITY

1.a Automatic Thermal Limit Monitor

The ATLM is assumed to prevent the consequences of a Rod Withdrawal Error (RWE) event when operating with reactor power above ~~[30%]~~ RTP. Below this power level, the consequences of an RWE event will not exceed the fuel thermal limits, and therefore the ATLM is not required to be OPERABLE. Therefore the LPSP allowable value must be ~~[30%]~~ RTP or below to assure ATLM operability above ~~[30%]~~ RTP.

1.b. Rod Worth Minimizer (RWM)

Compliance with the GWSR, and therefore OPERABILITY of the RWM, is required in MODES 1 and 2 with THERMAL POWER below ~~[10%]~~

APPLICABLE SAFETY ANALYSIS, LCO, and APPLICABILITY (Continued)

RTP. The LPSP Allowable Value must be ~~[~~10%~~]~~ RTP or above to ensure required operability of the RWM below ~~[~~10%~~]~~ RTP. When THERMAL POWER is above ~~[~~10%~~]~~ RTP there is no possible control rod configuration that results in a control rod worth that could exceed the fuel damage limit for the worst case RWE. In MODES 3 and 4, all control rods are required to be inserted in the core. In MODE 5, restrictions on control rod withdrawals in core cells containing fuel assemblies provides sufficient Shutdown Margin (SDM) to assure that the reactor is subcritical and the consequences of a RWE are within limits.

2. Reactor Mode Switch – Shutdown Position

~~Three~~ Four *channels are required to be OPERABLE to ensure that no single channel failure will preclude a rod block when required.*

STD DEP 16.3-67
STD DEP 16.3-101

ACTIONS

A.1 and A.2

When either ATLM becomes inoperable a rod block is issued and automatic RCIS actions prohibited by forcing the RCIS to be in the manual mode. Automatic operation can be restored only by restoring ATLM operation. Manual control of rod withdrawal (in either RCIS manual or semi-automatic mode) may proceed if the inoperable ATLM is placed in bypass. The ~~[~~72~~]~~ hour Completion Time for Action A.1 is based on the low probability of an event occurring coincident with a failure of the remaining OPERABLE channel and the *high reliability of the ATLM Function, and provides sufficient time to effect repairs.*

Alternately, plant maneuvering may continue if operation within thermal limits is verified by other suitable means as described above.

C.1

When either RWM becomes inoperable a rod block is issued and automatic RCIS actions prohibited by forcing the RCIS to be in the manual mode. Automatic operation can be restored only by restoring RWM operation. Manual control rod withdrawal may proceed (in the RCIS manual or semi-automatic mode) if the inoperable RWM is placed in bypass. The 72 hour Completion Time is based on the low probability of an event occurring coincident with a failure of the remaining OPERABLE channel and the *high reliability of the RWM Function, and provides sufficient time to effect repairs. The RWM is considered to remain OPERABLE when individual control rods are bypassed as required by LCO 3.1.3 or LCO 3.1.6.*

E.1 and E.2

If there are failures of the Reactor Mode Switch – Shutdown Position Function the plant must be placed in a condition where the LCO does not apply. This is accomplished by suspending all control rod withdrawal immediately (Action E.1), and initiating ~~to fully inserting~~ full insertion of *all*

insertable control rods in core cells containing one or more fuel assemblies (Action E.2).

SURVEILLANCE REQUIREMENTS

SR 3.3.5.1.1 and SR 3.3.5.1.2

STD DEP 16.3-99

The CHANNEL FUNCTIONAL TESTS for the ATLM and RWM are performed using simulated data that emulates an action outside of permissible rod withdrawals and verifying that a rod block output occurs. ~~If the rod blocks do not occur within the specified allowable values , the plant specific setpoint methodology may be revised, as appropriate, if the history and all other pertinent information indicate a need for the revision. The setpoint shall be left set consistent with the assumptions of the current plant specific setpoint methodology.~~ As noted, the SRs are not required to be performed until 1 hour after specified conditions are met (e.g., after any control rod is withdrawn in MODE 2). This allows entry into the appropriate conditions needed to perform the required SRs.

The ~~[92~~ 31~~]~~ day frequencies are based on the specified high reliability and low drift of the devices that are used to implement the RWM and ATLM. In Addition, the self test features provide confidence that most failures that occur between surveillances will be automatically detected. These features, coupled with the use of 2/2 logic before rod withdrawal is permitted, provides confidence that the frequency is adequate.

SR 3.3.5.1.3 and SR 3.3.5.1.4

The LPSP is the point where the transition is made between the ATLM and RWM functions. The Allowable Value for the LPSP is in the range of ~~[~~10~~]~~% to ~~[~~30~~]~~% RTP. The effective setpoint of the LPSP must be periodically confirmed.

STD DEP 16.3-102

SR 3.3.5.1.6

The ~~process computer~~ Plant Computer Function (PCF) *calculations that provide setpoints to the ATLM use~~s~~ various measured process parameters. A CHANNEL CHECK ~~on~~* of *the parameters is performed every ~~[~~24~~]~~ hours. These parameters are:*

a. FMCRD cooling water flow,
b. Feedwater flow,
c. Feedwater temperature,
d. Recirculation flow,
e. RPV pressure,
f. CUW flow,
g. APRM, and
h. Selected LPRMs.

Performance of the CHANNEL CHECK provides confidence that a gross failure of a device in a channel has not occurred. A CHANNEL CHECK is a comparison of the parameter indicated in one channel to a similar parameter in a different channel. It is based on the assumption that

SURVEILLANCE REQUIREMENTS (Continued)

channels monitoring the same parameter should read approximately the same value. Significant deviations between the channels could be an indication of excessive instrument drift on one of the channels or other channel faults.

Agreement criteria are determined by the plant staff based on a combination of the channel instrument and parameter indication uncertainties.

The Frequency is based on operating experience that demonstrates channel failure is rare and on the online diagnostics that monitor the channels for proper operation. *The specified high reliability of each channel provides confidence that a channel failure will be rare. The CHANNEL CHECK*s every 24 hours *supplement~~s~~ less formal, but more frequent, checks of channels during normal operational use of the displays associated with the channels required by the LCO.*

B 3.3 INSTRUMENTATION

B 3.3.6.1 Post Accident Monitoring (PAM) Instrumentation

BASES

The information in this section of the reference ABWR DCD, including all subsections, is incorporated by reference with the following departures and site specific supplements. The site-specific supplements partially address COL License Information Item 16.1.

STD DEP T1 2.3.1
STD DEP T1 2.14-1
STD DEP T1 3.4-1
STD DEP 7.5-1
STD DEP 16.3-77
STD DEP 16.3-78

STD DEP T1 3.4-1

LCO

Listed below is a discussion of each of the specified instrument Functions listed in Table 3.3.6.1-1. Data for most of the display Functions are transmitted to the operator displays via the four divisions of the Essential Communication Function (ECF) ~~*Multiplexer System (EMS)*~~*. Exceptions are noted in the following discussions for each Function.*

STD DEP 16.3-77

4. Suppression Pool Water Level

Suppression pool water level is a Category I variable provided to detect a breach in the reactor coolant pressure boundary (RCPB). This variable is also used to verify and provide long term surveillance of ECCS function. ~~*The wide range s*~~*Suppression pool water level measurement provides the operator with sufficient information to assess the status of the RCPB and to assess the status of the water supply to the ECCS.* ~~*The wide range water level indicators monitor the suppression pool level from the bottom of the ECCS suction lines to five feet above the normal suppression pool level. Four wide range suppression pool water level signals are transmitted from separate differential pressure transmitters.*~~ Suppression pool water level is monitored by four divisions of narrow range level instrumentation measuring from 0.5 meters above to 0.5 meters below normal water level, and two wide range instruments measuring from the centerline of the ECCS suction piping to the wetwell spargers. *Suppression pool water level is continuously displayed in the control room. These displays are the primary indication used by the operator during an accident. Therefore, the PAM Specification deals specifically with this portion of the instrument channel.*

5.a. Drywell Pressure, 5.b. ~~Wide Range Containment~~ Wetwell Pressure

Drywell and wetwell *pressure ~~is a~~* are Type A, *Category I variables provided to detect breach of the RCPB and to verify ECCS functions that operate to maintain RCS integrity. Requirements for monitoring of drywell pressure are specified for both narrow range and wide range. The narrow range monitoring requirement is satisfied in the existing essential safety system designs by the four divisions of drywell pressure instruments which provide inputs to the initiation of the Reactor Protection System (RPS) and the Emergency Core Cooling Systems (ECCS).*

The requirement for unambiguous wide range drywell pressure monitoring are satisfied with two channels of drywell *instrumentation and integration with* two channels of *wetwell pressure instrumentation. Given the existence of (1) the normal pressure suppression vent path between the drywell and wetwell and (2) the wetwell to drywell vacuum breakers, the long-term pressure within the drywell and wetwell will be approximately the same. Drywell* and wetwell *pressure signals are transmitted from separate pressure transmitters. Drywell* and wetwell *pressure is continuously displayed in the main control room. These displays are the primary indication used by the operator during an accident. Therefore, the PAM Specification deals specifically with this portion of the instrument channel.*

8. Primary Containment Isolation Valve (PCIV) Position (continued)

If a penetration flow path is isolated by at least one closed and de-activated automatic valve, closed manual valve, blind flange,or check valve with flow through the valve secured, position indication for the PCIV(s) in the associated penetration flow path is not needed to determine status. Therefore, per footnote (b) in Table 3.3.6.1-1, the position indication for valves in an isolated penetration is not required to be OPERABLE.

Indication of the completion of the containment isolation function is provided by valve closed/not closed indications for individual valves on safety related displays. Annunciators are provided to alert the operator to any lines that may not be isolated.

For this plant, the PCIV position PAM instrumentation consists of ~~the following:~~ position switches, associated connections and control room indication for active PCIVs (check valves and manual valves are not required to have position indication).

STD DEP T1 2.14-1

~~*11. and 12. Containment Atmospheric Monitors - Drywell and Wetwell Hydrogen and Oxygen Analyzer*~~

~~*Drywell and wetwell hydrogen and oxygen analyzers are Category I instruments provided to detect high hydrogen or oxygen concentration conditions that represent a potential for containment breach. These parameters are also important in verifying the adequacy of mitigating actions. There are two divisions in the Containment Atmospheric*~~

~~*Monitoring System analyzers with one channel of H2 monitoring and one channel of O2 monitoring per division. Samples of either the drywell or wetwell are drawn into the analyzers based on the position of a selector switch in the main control room. Displays and alarms are provided in the main control room. These displays are the primary indication used by the operator during an accident. Therefore, the PAM Specification deals specifically with this portion of the instrument channel.*~~

STD DEP 16.3-78 ~~*13. Containment Water Level.*~~

~~*Containment Water Level displays are Category I instruments provided for early detection of small leaks in the containment and as an alternate to drywell pressure and drywell radiation Functions. There are two channels of Containment Water Level with displays and alarms provided in the main control room. These displays are the primary indication used by the operator during an accident. Therefore, the PAM Specification deals specifically with this portion of the instrument channel.*~~

STD DEP T1 2.14-1
STD DEP 16.3-78 ~~*14*~~*11. Suppression Pool Water Temperature*

~~*15*~~*12. Drywell Atmosphere Temperature*

STD DEP T1 2.3-1 ~~*16. Main Steam Line Radiation*~~

~~*Main steam line radiation is a Category I variable provided to monitor fuel integrity. Radiation in the main steam line tunnel - which is measured by the process radiation monitoring system - is an indicator of coolant radiation. There are four divisions of main steam tunnel radiation monitoring with a control room display channel from each division. These displays are the primary indication used by the operator during an accident. Therefore, the PAM Specification deals specifically with this portion of the instrument channel.*~~

STD DEP 7.5-1 13. Wetwell Atmosphere Temperature

Wetwell Atmosphere Temperature is a Category I variable provided to monitor wetwell atmospheric temperature. Multiple temperature sensors dispersed throughout the wetwell provide surveillance monitoring of temperatures in the wetwell, such that the required indication of bulk average wetwell atmosphere temperature is satisfied.

STD DEP T1 2.14-1

ACTIONS (continued) *C.1*

~~*As noted in the LCO this action does not apply to Functions 11 & 12, (hydrogen/oxygen monitors), which are addressed in Condition D.*~~ *When a Function has two required channels that are INOPERABLE then one channel must be restored to OPERABLE status within 7 days. The Completion Time of 7 days is based on the relatively low probability of an event requiring PAM instrument operation and the availability of alternate means to obtain the required information. Continuous operation with two*

required channels inoperable in a Function is not acceptable because the alternate indications may not fully meet all performance qualification requirements applied to the PAM instrumentation. Therefore, requiring restoration of one inoperable channel of the Function limits the risk that the PAM Function will be in a degraded condition should an accident occur.

Multiple entry into the condition table causes Condition A to be invoked on completion of Action C.1 so appropriate additional action is taken.

ACTIONS (continued)

~~*D.1*~~

~~*When two hydrogen/oxygen monitor display channels are inoperable, at least one channel must be restored to OPERABLE status within 72 hours. The 72 hour Completion Time is reasonable, based on the backup capability of the Post Accident Sampling System to monitor the hydrogen concentration for evaluation of core damage and to provide information for operator decisions. Also, it is unlikely that a LOCA that would cause core damage would occur during this time.*~~

~~*E*~~D.*1*

This Required Action directs entry into the appropriate Condition referenced in Table 3.3.6.1-1. The applicable Condition referenced in the Table is Function dependent. If the required Action and associated Completion Time for Condition C~~, or D~~ are not met for a Function then Condition D is entered for that function and Table 3.3.6.1-1 used to transfer to the appropriate subsequent Condition.

~~*F*~~E.*1*

For the PAM Functions in Table 3.3.6.1-1, if any Required Action and associated Completion Time of Condition C~~ or D~~ is not met, the plant must be placed in a MODE in which the LCO does not apply. This is done by placing the plant in at least MODE 3 within 12 hours.

The allowed Completion Times are reasonable, based on operating experience, to reach the required plant condition from full power conditions in an orderly manner and without challenging plant systems.

~~*G*~~F.*1*

Since alternate means of monitoring the parameters to which this Condition applies have been developed and tested, the Required Action is to submit a report to the NRC instead of requiring a plant shut down. These alternate means may be temporarily installed if the normal PAM channel cannot be restored to OPERABLE status within the allotted time. The report provided to the NRC should discuss the alternate means used, describe the degree to which the alternate means are equivalent to the installed PAM channels, justify the areas in which they are not equivalent, and provide a schedule for restoring the normal PAM channels.

SURVEILLANCE REQUIREMENTS

The following SRs apply to each PAM instrumentation Function in Table 3.3.6.1-1, except SR 3.3.6.1.1 does not apply to Function 8.

SR 3.3.6.1.1

Performance of a CHANNEL CHECK once every [31] days ensures that a gross instrumentation failure has not occurred. A CHANNEL CHECK is a comparison of the parameter indicated on one instrumentation channel to a similar parameter on other instrumentation channels. It is based on the assumption that independent displays of the same parameter should read approximately the same value. Significant deviations between displays could be an indication of excessive instrument drift or other faults in one of the channels. A CHANNEL CHECK will detect gross channel failure; thus, it is key to verifying the instrumentation continues to operate properly between each CHANNEL CALIBRATION.

Agreement criteria are determined by the plant staff based on a combination of the channel instrument uncertainties, including isolation, indication, and readability. If a channel is outside the match criteria, it may be an indication that the sensor or the signal processing equipment has drifted outside its limit. Performance of the CHANNEL CHECK provides confidence that undetected outright channel failure is limited to [31] days.

The high reliability of the devices used to implement the PAM functions provides confidence that failure of more than one channel of a given function in any [31] day interval is rare. The CHANNEL CHECK supplements less formal, but more frequent, checks of channels during normal operational use of those displays associated with the required channels of this LCO.

REFERENCES

1. *Regulatory Guide 1.97, "Instrumentation for Light-Water Cooled Nuclear Power Plants to Assess Plant and Environs Conditions During and Following an Accident," [*Revision 3, May 1983*]* .

2. *DCD Tier 2, Section 7.5*

[This page intentionally left blank]

B 3.3 INSTRUMENTATION

B 3.3.6.2 Remote Shutdown System

BASES

The information in this section of the reference ABWR DCD, including all subsections, is incorporated by reference with the following departures and site specific supplements. The site specific supplements partially address COL License Information Item 16.1.

STD DEP T1 2.14-1
STD DEP T1 3.4-1 (All)
STD DEP 8.3-1
STD DEP 16.3-59
STD DEP 16.3-60

STD DEP 8.3-1
STD DEP T1 2.14-1

BACKGROUND

The Remote Shutdown System provides the control room operator with sufficient instrumentation and controls to place and maintain the plant in a safe shutdown condition from a location other than the control room. This capability is necessary to protect against the possibility of the control room becoming inaccessible. A safe shutdown condition is defined as MODE 3. With the plant in MODE 3, the High Pressure Core Flooder System, the safety/relief valves, and the Residual Heat Removal System Shutdown Cooling and Suppression Pool Cooling Modes can be used to remove core decay heat and meet all safety requirements. Additional systems assisting in the remote shutdown capability are portions of the Nuclear Boiler System, the Reactor Building Cooling Water System, the Reactor Building Service Water System, and the ~~Electrical~~ ~~Medium Voltage~~Electric Power Distribution System~~, and the Flammability Control System~~. The long term supply of water for the HPCF and the ability to operate shutdown cooling from outside the control room allow extended operation in MODE 3.

The functions needed for remote shutdown control are transferred to the remote shutdown panels using manual switches that disable control of the functions from the main control room and enable control from the remote shutdown panels. Control signals are interrupted by the transfer devices at the hardwired, analog loop. Sensor signals which interface with the remote shutdown system for local display of process variables are continuously powered and available for monitoring at all times. ~~*Control signals from the main control room are routed from the Remote Digital Logic Controllers Multiplexing Units (RMUsRDLCs) to remote shutdown transfer devices, and then to the interfacing system equipment. Actuation of the transfer switches bypasses the DLCs and connects the control signals directly to the remote shutdown panels.*~~Control signals are switched from ELCS I/Os directly to the remote shutdown panels by transfer switches.

STD DEP 16.3-59 LCO

12, and 13. RPV Wide Range~~/Narrow~~ Shutdown Range Water Level.

Reactor vessel water level is provided to support monitoring of core cooling, to verify operation of the make up pumps, and is needed for satisfactory operator control of the make up pumps. The wide range water level channels cover the range from the near top of the fuel to near the top of the steam separators. The ~~narrow~~ shutdown *range provides indication from near the bottom of the separators to above the steam lines. RPV level is a necessary parameter for achieving and maintaining the reactor in MODE 3. One channel of each range is provided on each of the RSS panels. Both channels are required to be OPERABLE to provide redundant capability to achieve MODE 3 from both RSS panels.*

STD DEP 16.3-60

14, 15, 16 and ~~16~~17. Reactor Building Cooling Water Flow/Controls & Reactor Building Service Water Strainer Differential Pressure/Controls.

These parameters and controls are required to monitor and control the water supply for cooling the equipment needed to achieve MODE 3 and to provide containment heat removal. The Reactor Building Cooling Water controls provided are as given in reference 4 and the Reactor Building Service Water controls provided are as given in reference 5. One channel of each Function is provided on each of the RSS panels. Both channels of each Function are required to be OPERABLE to provide redundant capability to achieve MODE 3 from both RSS panels.

STD DEP 2.14-1

~~*17. Cooling Water Flow to Flammability Control System.*~~

~~*A control for the FCS B inlet valve is provided on the division II panel only. This control is needed in order for the operator to isolate cooling water flow to FCS. One channel is required to be OPERABLE to assure that MODE 3 can be achieved from the Division II RSS panel.*~~

ACTIONS

A.1

Condition A addresses the situation where one or more required Functions are inoperable in one of the RSS divisions. This includes any Function listed in Table 3.3.6.2-1, as well as the control and transfer switches.

The Required Action is to restore the inoperable division of the Function to OPERABLE status within ~~[~~90~~]~~ days. The Completion Time is based on the specified high reliability of the devices used to implement the Functions and the low probability of an event that would require evacuation of the control room coupled with an undetected failure in the other RSS division.

B 3.3 INSTRUMENTATION

B 3.3.7.1 Control Room Habitability Area (CRHA) Emergency Filtration (EF) System Instrumentation

BASES

The information in this section of the reference ABWR DCD, including all subsections, is incorporated by reference with the following departure and site specific supplements. The site specific supplements partially address COL License Information Item 16.1.

STD DEP 16.3-99

SURVEILLANCE REQUIREMENTS

As noted at the beginning of the SRs, the SRs for each CRHA and Emergency Filtration Instrumentation Function are located in the SRs column of Table 3.3.7.1-1.

SR 3.3.7.1.1

Performance of the CHANNEL CHECK once every [~~24~~12] hours ensures that a gross failure of instrumentation has not occurred. A CHANNEL CHECK is a comparison of the indicated parameter for one instrument channel to a similar parameter on other channels. It is based on the assumption that instrument channels monitoring the same parameter should read approximately the same value. Significant deviations between the instrument channels could be an indication of excessive instrument drift in one of the channels or other channel faults. A CHANNEL CHECK will detect gross channel failure; thus, it is key to verifying the instrumentation continues to operate properly between each CHANNEL FUNCTIONAL TEST.

Agreement criteria are determined by the plant staff based on a combination of the channel instrument and parameter indication uncertainties.

The Frequency is based upon operating experience that demonstrates channel failure is rare. Thus, performance of the CHANNEL CHECK ensures that undetected outright channel failure is limited to [~~24~~ 12] hours. The CHANNEL CHECK supplements less formal, but more frequent, checks of channel status during normal operational use of the displays associated with channels required by the LCO.

SR 3.3.7.1.2

A CHANNEL FUNCTIONAL TEST is performed on each required channel to ensure that the entire channel will perform the intended function and that the setpoints in the initiation logic devices are correct.

The Frequency of [~~92~~ 31] days is based on requiring the Emergency Filtration train to operate for a specified duration every [92] days.

SURVEILLANCE
REQUIREMENTS
(continued)

STD DEP 16.3-99 *SR 3.3.7.1.3*

A CHANNEL CALIBRATION is a complete check of the instrument channel and the sensor. This test verifies the channel responds to the measured parameter within the necessary range and accuracy. CHANNEL CALIBRATION leaves the channel adjusted to account for instrument drifts between successive calibrations. Measurement and setpoint error historical determinations must be performed consistent with the plant specific setpoint methodology. The channel shall be left calibrated consistent with the assumptions of the setpoint methodology.

~~*If the as found trip points (fixed or variable) is not within its Allowable Value, the plant specific setpoint methodology may be revised, as appropriate, if the history and all other pertinent information indicate a need for the revision. The setpoint shall be left set consistent with the assumptions of the current plant specific setpoint methodology.*~~

B 3.3 INSTRUMENTATION

B 3.3.8.1 Electric Power Monitoring

BASES

The information in this section of the reference ABWR DCD, including all subsections, is incorporated by reference with the following departure and site specific supplement. The site specific supplement partially addresses COL License Information Item 16.1.

STD DEP 16.3-62

ACTIONS

C.1 and C.2

If any Required Action and associated Completion Time of Condition A or B is not met in MODE 1, 2, or 3, a plant shutdown must be performed. This places the plant in a condition where minimal equipment, powered through the inoperable electric power monitoring assembly(s) (power monitor), is required and ensures that the safety function of the RPS (e.g., scram of control rods) is not required.

D.1, D.2.1, and D.2.2

If any Required Action and associated Completion Time of Condition A or B are not met in MODE 4 or 5, with any control rod withdrawn from a core cell containing one or more fuel assemblies or with both isolation valves of a RHR shutdown cooling subsystem open, the operator must immediately initiate action to fully insert all insertable control rods in core cells containing one or more fuel assemblies (Required Action D.1).

SURVEILLANCE REQUIREMENTS

SR 3.3.8.1.1

A CHANNEL FUNCTIONAL TEST is performed on each overvoltage. undervoltage, overfrequency, and underfrequency channel to ensure that the entire channel will perform the intended function.

The [~~92~~ 31] day frequency is based on the specified high reliability and low drift of the devices that are used to implement the Functions.

[This page intentionally left blank]

B 3.3 INSTRUMENTATION

B 3.3.8.2 Reactor Coolant Temperature Monitoring

BASES

The information in this section of the reference ABWR DCD, including all subsections, is incorporated by reference with the following departure and site specific supplements. The site specific supplements partially address COL License Information Item 16.1.

STD DEP 16.3-63

BACKGROUND

The temperature monitoring instrumentation will provide temperature indication and trends to the operator in the main control room during RHR decay heat removal operation. One temperature monitoring transmitter *for each RHR channel is available to monitor reactor coolant temperature at the inlet to the RHR heat exchanger.*

SURVEILLANCE REQUIREMENTS

SR 3.3.8.2.1

Performance of the CHANNEL CHECK ensures that a gross failure of instrumentation has not occurred between Channel Functional Tests. A CHANNEL CHECK is a comparison of the parameter indicated on one channel to the same parameter indicated on other similar channels. It is based on the assumption that instrument channels monitoring the same parameter should read approximately the same value. Significant deviations between the instrument channels could be an indication of excessive instrument drift or other channel faults in one of the channels.

Agreement criteria are determined by the plant staff, based on a combination of the channel instrument uncertainties, including indication and readability. If a channel is outside the match criteria, it may be an indication that the instrument has drifted outside its limit.

The specified high reliability of each temperature monitoring channel provides confidence that a channel failure will be rare. However, a surveillance interval of ~~[~~7~~]~~ days is used to provide confidence that gross failures that do not activate an annunciator or alarm will be detected within ~~[~~7~~]~~ days. The CHANNEL CHECK supplements less formal, but more frequent, checks of channels during normal operational use of the displays associated with the channels required by the LCO.

SR 3.3.8.2.2

A CHANNEL FUNCTIONAL TEST is performed on each reactor coolant temperature monitoring channel to ensure that the entire channel will perform the intended function. As noted in the Surveillance, the CHANNEL FUNCTIONAL TEST is only required to be performed prior to RHR shutdown operation. The ~~[~~92~~]~~ 31~~]~~ day frequency is based on the simple

SURVEILLANCE REQUIREMENTS (Continued)

design and reliability of the temperature monitoring instrumentation.

B 3.4 REACTOR COOLANT SYSTEM (RCS)

B 3.4.1 Reactor Internal Pumps (RIPs) – Operating

BASES

The information in this section of the reference ABWR DCD, including all subsections, is incorporated by reference with the following departures.

STD DEP 16.3-5
STD DEP 16.3-6
STD DEP 16.3-96

BACKGROUND

The subcooled water enters the bottom of the fuel channels and contacts the fuel cladding, where heat is transferred to the coolant. As it rises, the coolant begins to boil, creating steam voids within the fuel channel that continue until the coolant exits the core. Because of reduced moderation, the steam voiding introduces negative reactivity that must be compensated for to maintain or to increase reactor power. The recirculation flow control allows operators to increase recirculation flow and sweep some of the voids from the fuel channel, overcoming the negative reactivity void effect. Thus, the reason for having variable recirculation flow is to compensate for reactivity effects of boiling over a wide range of power generation (i.e., ~~55~~ 70 to 100% RTP) without having to move control rods and disturb desirable flux patterns.

STD DEP 16.3-6

STD DEP 16.3-5

SURVEILLANCE REQUIREMENTS

SR 3.4.1.1

This SR ensures that the number of ~~OPERABLE~~ operating RIPs is consistent with the assumptions of the applicable DBA and transient analyses. This surveillance is required to be performed once every 24 hours. Operating experience with previous BWR designs has demonstrated that a 24 hour frequency for this type of surveillance is adequate.

STD DEP 16.3-96

APPLICABLE SAFETY ANALYSES

The operation of the Reactor Coolant Recirculation System with 100% core flow is an initial condition assumed in the design basis loss of coolant accident (LOCA) (Ref. 1) and abnormal operating transients (Ref. 2). Rated core flow can be achieved with either nine or ten RIPs in operation. During a LOCA and an all RIPs trip event, all operating RIPs are assumed to trip at time zero due to a coincident loss of offsite power. The subsequent core flow coastdown will be immediate and rapid because of the relatively low inertia of the pumps and motors. However, the RIPs are assumed to have sufficient flow coastdown characteristics to maintain fuel thermal margins during abnormal operational transients (Ref. 2), which are analyzed in DCD Tier 2, Chapter 15.

APPLICABLE SAFETY ANALYSES (Continued)

~~*A plant specific LOCA analysis may be performed assuming only [ ] operating RIPs. This analysis shall demonstrate that, in the event of a LOCA, the Emergency Core Cooling System response will provide adequate core cooling, provided the APLHGR requirements are modified accordingly (Ref. 3).*~~

~~*The transient analyses of the DCD Tier 2, Chapter 15 may also be performed for [ ] RIPs in operation (Ref. 3) to demonstrate sufficient flow coastdown characterisitics to maintain fuel thermal margins during the abnormal operational transients analyzed provided the MCPR requirements are modified. During operation with only [ ] RIPs, modification to the Reactor Protection System average power range monitor (APRM) instrument setpoints is also required to account for the different relationships between reactor internal pump flow (reverse flow through the pump impellers) and reactor core flow. The APLHGR and MCPR setpoints for RIPs in operation are to be specified in the COLR. The APRM flow biased simulated thermal power setpoint is in LCO 3.3.1.1, "SSLC Sensor Instrumentation."*~~

RIPs operating satisfies Criterion 2 of the NRC Policy Statement.

LCO

At least nine RIPs are required to be in operation to ensure that during a postulated LOCA or transient the assumptions of the associated analyses are satisfied. ~~*With only [ ] RIPs in operation, modifications to the required APLHGR limits (LCO 3.2.1, "AVERAGE PLANAR LINEAR HEAT GENERATION RATE (APLHGR)"), MCPR limits (LCO 3.2.2, "MINIMUM CRITICAL POWER RATION (MCPR)"), and APRM Flow Biased Simulated Thermal Power – High Setpoint (LCO 3.3.1.1) may be applied to allow continued operation consistent with the assumptions of Reference 1.*~~

APPLICABILITY

In MODES 1 and 2, requirements for operation of the Reactor Coolant Recirculation System are necessary since there is considerable energy in the reactor core and the limiting design basis transients and accidents are assumed to occur. In MODES 3, 4, and 5, the consequences of an accident are reduced and the flow and coastdown characteristics of the RIPs are not important.

ACTIONS

A.1

With the requirements of the LCO not met, the unit is required to be brought to a MODE in which the LCO does not apply. To achieve this status, the plant must be brought to MODE 3 within 12 hours. In this condition, the RIPs are not required to be operating because of the reduced severity of DBAs and minimal dependence on the RIPs flow and coastdown characteristics. The allowed Completion Time of 12 hours is reasonable, based on operating experience, to reach MODE 3 from full power conditions in an orderly manner and without challenging plant systems.

SURVEILLANCE REQUIREMENTS

SR 3.4.1.1

This SR ensures that the number of operating RIPs is consistent with the assumptions of the applicable DBA and transient analyses. This surveillance is required to be performed once every 24 hours. Operating experience with previous BWR designs has demonstrated that a 24 hour frequency for this type of surveillance is adequate.

REFERENCES

1. *DCD Tier 2, Section 6.3.3.*
2. *DCD Tier 2, Chapter 15.*
3. ~~*[Plant specific analysis for [ ] RIPs operating.]*~~

[This page intentionally left blank]

B 3.4 REACTOR COOLANT SYSTEM (RCS)

B 3.4.2 Safety/Relief Valves (S/RVs)

BASES

The information in this section of the reference ABWR DCD, including all subsections, is incorporated by reference with the following departure and site-specific supplements. The site-specific supplements partially address COL License Information Item 16.1.

STD DEP 16.3-7

LCO

The S/RV setpoints are established to ensure the ASME Code limit on peak reactor pressure is satisfied. The ASME Code specifications require the lowest safety valve be set at or below vessel design pressure, i.e., 8.62 MPaG and the highest safety valve be set so the total accumulated pressure does not exceed 110% of the design pressure for conditions. The ~~transient~~ overpressurization *evaluation~~s~~ in Reference ~~3 are~~* 2 is *based on these setpoints, but also include*s *the additional uncertainties of ± 1% of the nominal setpoint to account for potential setpoint drift to provide an added degree of conservatism.*

ACTIONS

A.1

With the safety function of one required S/RV inoperable, the remaining OPERABLE S/RVs are capable of providing the necessary overpressure protection. ~~[Because of additional design margin, the ASME Code limits for the RCPB can also be satisfied with two S/RVs inoperable.]~~ However, the overall reliability of the pressure relief system is reduced because additional failures in the remaining OPERABLE S/RVs could result in failure to adequately relieve pressure during a limiting event. For this reason, continued operation is permitted for a limited time only.

SURVEILLANCE REQUIREMENTS

SR 3.4.2.2

A manual actuation of each required S/RV is performed to verify that, mechanically, the valve is functioning properly and no blockage exists in the valve discharge line. This can be demonstrated by the response of the turbine control valves or bypass valves, by a change in the measured steam flow, or any other method suitable to verify steam flow. Adequate reactor steam dome pressure must be available to perform this test to avoid damaging the valve. Sufficient time is therefore allowed after the required pressure is achieved to perform this test. Adequate pressure at which this test is to be performed is ~~[~~6.55~~]~~ MPaG (the pressure recommended by the valve manufacturer). Plant startup is allowed prior to performing this test because valve OPERABILITY and the setpoints for overpressure protection are verified, per ASME requirements, prior to valve installation. Therefore, this SR is modified by a Note that states the Surveillance is not

SURVEILLANCE REQUIREMENTS (Continued)

required to be performed until 12 hours after reactor steam dome pressure is ≥ ([6.55] MPaG).

The 12 hours allowed for manual actuation after the required pressure is reached is sufficient to achieve stable conditions for testing and provides a reasonable time to complete the SR. If the valve fails to actuate due only to the failure of the solenoid but is capable of opening on overpressure, the safety function of the S/RV is considered OPERABLE.

The Frequency is consistent with SR 3.4.2.1 to ensure that the S/RVs are manually actuated following removal for refurbishment or lift setpoint testing.

B 3.4 REACTOR COOLANT SYSTEM (RCS)

B 3.4.3 RCS Operational LEAKAGE

BASES

The information in this section of the reference ABWR DCD, including all subsections, is incorporated by reference with the following departures.

STD DEP 7.3-12
STD DEP 16.3-11

APPLICABLE SAFETY ANALYSES

The allowable RCS operational LEAKAGE limits are based on the predicted and observed leakage in operating plants. The normally expected background LEAKAGE due to equipment design and the detection capability of the instrumentation for determining system LEAKAGE were also considered. The evidence from experiments suggests, for LEAKAGE even greater than the specified unidentified LEAKAGE limits, the probability is small that the imperfection or crack associated with such LEAKAGE would grow rapidly.

STD DEP 7.3-12
STD DEP 16.3-11

The unidentified LEAKAGE flow limit allows time for corrective action before the RCPB could be significantly compromised. The ~~[3.785~~19 L/min limit is a small fraction of the calculated flow from a critical crack in the primary system piping (Ref. 6)~~]~~. Crack behavior from experimental programs (Refs. 4 and 5) shows leak rates of ~~tens of thousands liters per second~~ hundreds of liters per minute *will precede crack instability.*

No applicable safety analysis assumes the total LEAKAGE limit. The total LEAKAGE limit considers RCS inventory makeup capability and drywell floor sump capacity.

RCS operational LEAKAGE satisfies Criterion 2 of the NRC Policy Statement.

LCO *RCS operational LEAKAGE shall be limited to:*

a. *Pressure Boundary LEAKAGE*

No pressure boundary LEAKAGE is allowed, being indicative of material degradation. LEAKAGE of this type is unacceptable as the leak itself could cause further deterioration, resulting in higher LEAKAGE. Violation of this LCO could result in continued degradation of the RCPB. LEAKAGE past seals and gaskets is not pressure boundary LEAKAGE.

STD DEP 7.3-12 *b.* *Unidentified LEAKAGE*

Unidentified LEAKAGE of ~~3.785~~ 19 L/min is allowed as a reasonable minimum amount that can be detected within a reasonable time. The drywell air monitoring, drywell sump level monitoring, and drywell air cooler condensate flow rate monitoring equipment are used to detect unidentified LEAKAGE. Violation of this LCO could result in continued degradation of the RCPB.

c. *Total LEAKAGE*

The total LEAKAGE limit is based on a reasonable minimum detectable amount. The limit also accounts for LEAKAGE from known sources (identified LEAKAGE). Violation of this LCO indicates an unexpected amount of LEAKAGE and, therefore, could indicate new or additional degradation in an RCPB component or system.

ACTIONS *A.1*

With RCS unidentified or total LEAKAGE greater than the limits, actions must be taken to reduce the leak. Because the LEAKAGE limits are conservatively below the LEAKAGE that would constitute a critical crack size, 4 hours is allowed to reduce the LEAKAGE rates before the reactor must be shut down. If an unidentified LEAKAGE has been identified and quantified, it may be reclassified and considered as identified LEAKAGE. However, the total LEAKAGE limit would remain unchanged. The 4 hour Completion Time is needed to properly verify the source before the reactor must be shut down.

B.1 and B.2

If any Required Action and associated Completion Time of Condition A is not met or if pressure boundary LEAKAGE exists, the plant must be brought to a MODE in which the LCO does not apply. To achieve this status, the plant must be brought to MODE 3 within 12 hours and to MODE 4 within 36 hours. The allowed Completion Times are reasonable, based on operating experience, to reach the required plant conditions from full power conditions in an orderly manner and without challenging plant systems.

REFERENCES 1. 10 CFR 50.2.

2. 10 CFR 50.55a(c).

3. 10 CFR 50, Appendix A, GDC 55.

4. GEAP-5620, April 1968.

STD DEP 16.3-11 5. NUREG-75/067, October 1975.

6. ~~*[COL Application for Leak Before Break Qualification for Piping Systems*~~ FSAR, Section 5.2.5.5.1.~~*]*~~

7. Regulatory Guide 1.45.

8. Generic Letter 88-01, Supplement 1.

[This page intentionally left blank]

B 3.4 REACTOR COOLANT SYSTEM (RCS)

B 3.4.4 RCS Pressure Isolation Valve (PIV) Leakage

BASES

The information in this section of the reference ABWR DCD, including all subsections, is incorporated by reference with no departures or supplements.

[This page intentionally left blank]

B 3.4 REACTOR COOLANT SYSTEM (RCS)

B 3.4.5 RCS Leakage Detection Instrumentation

BASES

The information in this section of the reference ABWR DCD, including all subsections, is incorporated by reference with no departures or supplements.

[This page intentionally left blank]

B 3.4 REACTOR COOLANT SYSTEM (RCS)

B 3.4.6 RCS Specific Activity

BASES

The information in this section of the reference ABWR DCD, including all subsections, is incorporated by reference with no departures or supplements.

[This page intentionally left blank]

B 3.4 REACTOR COOLANT SYSTEM (RCS)

B 3.4.7 Residual Heat Removal (RHR) Shutdown Cooling System – Hot Shutdown

BASES

The information in this section of the reference ABWR DCD, including all subsections, is incorporated by reference with the following departure.

STD DEP 16.3-9

ACTIONS

A.1, A.2, and A.3

The required cooling capacity of the alternate method should be ensured by verifying (by calculation or demonstration) its capability to maintain or reduce temperature. Decay heat removal by ambient losses can be considered as contributing to the alternate method capability. Alternate methods that can be used include (but are not limited to) ~~the Spent Fuel Pool Cooling System, or~~ the Reactor Water Cleanup System.

[This page intentionally left blank]

B 3.4 REACTOR COOLANT SYSTEM (RCS)

B 3.4.8 Residual Heat Removal (RHR) Shutdown Cooling System – Cold Shutdown

BASES

The information in this section of the reference ABWR DCD, including all subsections, is incorporated by reference with the following departure.

STD DEP 16.3-9

ACTIONS

A.1

The required cooling capacity of the alternate method should be ensured by verifying (by calculation or demonstration) its capability to maintain or reduce temperature. Decay heat removal by ambient losses can be considered as contributing to the alternate method capability. Alternate methods that can be used include (but are not limited to) ~~a RHR shutdown cooling subsystem], the Spent Fuel Pool Cooling System or~~ the Reactor Water Cleanup System.

[This page intentionally left blank]

B 3.4 REACTOR COOLANT SYSTEM (RCS)

B 3.4.9 RCS Pressure and Temperature (P/T) Limits

BASES

The information in this section of the reference ABWR DCD, including all subsections, is incorporated by reference with the following departure.

STD DEP 16.3-8

APPLICABLE SAFETY ANALYSES

The P/T limits are not derived from Design Basis Accident (DBA) analyses. They are prescribed during normal operation to avoid encountering pressure, temperature, and temperature rate of change conditions that might cause undetected flaws to propagate and cause nonductile failure of the RCPB, a condition that is unanalyzed. Reference 7 establishes the methodology for determining the P/T limits.

SURVEILLANCE REQUIREMENTS

SR 3.4.9.3 and SR 3.4.9.4 and SR 3.4.9.5

Limits on the reactor vessel flange and head flange temperatures are generally bounded by the other P/T limits during system heatup and cooldown. However, operations approaching MODE 4 and MODE 5 and in MODE 4 with RCS temperature less than or equal to certain specified values require assurance that these temperatures meet the LCO limits.

The flange temperatures must be verified to be above the limits 30 minutes before and while tensioning the vessel head bolting studs to ensure that once the head is tensioned the limits are satisfied. When in MODE 4 with RCS temperature ≤ [27°C], 30 minute checks of the flange temperatures are required because of the reduced margin to the limits. When in MODE 4 with RCS temperature ≤ [38°C], monitoring of the flange temperature is required every 12 hours to ensure the temperatures are within the limits specified in the PTLR.

STD DEP 16.3-8

REFERENCES

1. *10 CFR 50, Appendix G.*
2. *ASME, Boiler and Pressure Vessel Code, Section III, Appendix G.*
3. *ASTM E 185-82, July 1982.*
4. *10 CFR 50, Appendix H.*
5. *Regulatory Guide 1.99, Revision 2, May 1988.*
6. *ASME, Boiler and Pressure Vessel Code, Section XI, Appendix E.*
7. ~~*NEDO-21778-A, December 1978*~~ SIR-05-044-A, "Pressure-Temperature Limits Report Methodology for Boiling Water Reactors," dated April 2007, and approved for referencing in license applications by the NRC in letter dated February 6, 2007 from Ho K Nieh Deputy Director, Division of Policy and Rulemaking, Office of Nuclear Reactor Regulation to Mr. Randy C. Bunt, Chair, BWR Owner's Group.

B 3.4 REACTOR COOLANT SYSTEM (RCS)

B 3.4.10 Reactor Steam Dome Pressure

BASES

The information in this section of the reference ABWR DCD, including all subsections, is incorporated by reference with no departures or supplements.

[This page intentionally left blank]

B 3.5 EMERGENCY CORE COOLING SYSTEMS (ECCS)

B 3.5.1 ECCS – Operating

BASES

The information in this section of the reference ABWR DCD, including all subsections, is incorporated by reference with the following departures.

STD DEP 8.3-1
STD DEP 16.3-10

BACKGROUND

The HPCF System is comprised of two separate subsystems. Each HPCF subsystem (Ref. 1) consists of a single motor driven pump, a flooder sparger above the core, and piping and valves to transfer water from the suction source to the sparger. Suction piping is provided from the CST and the suppression pool. Pump suction is normally aligned to the CST source to minimize injection of suppression pool water into the RPV. However, if the CST water supply is low or the suppression pool level is high, an automatic transfer to the suppression pool water source ensures a water supply for continuous operation of the HPCF System. The HPCF System is designed to provide core cooling over a wide range of RPV pressures, (~~0~~0.69 to 8.12 MPaD), vessel to the air space of the compartment containing the water source for the pump suction. Upon receipt of an initiation signal, the HPCF pumps automatically start (when electrical power is available) and valves in the flow path begin to open. Since the HPCF System is designed to operate over the full range of RPV pressures, HPCF flow begins as soon as the necessary valves are open. A full flow test line is provided to route water from and to the ~~CST~~ suppression pool to allow testing of the HPCF System during normal operation without injecting water into the RPV.

The RCIC System is designed to provide core cooling for a wide range of reactor pressures, 1.035 MPa~~G~~D to 8.12 MPa~~G~~D, vessel to the air space of the compartment containing the water source for the pump suction. Upon receipt of an initiation signal, the RCIC turbine accelerates to a specified speed. As the RCIC flow increases, the turbine control valve is automatically adjusted to maintain design flow. Exhaust steam from the RCIC turbine is discharged to the suppression pool. A full flow test line is provided to route water from and to the suppression pool to allow testing of the RCIC System during normal operation without injecting water into the RPV. For the station black out scenario, where all AC power from the offsite AC circuits and from the standby diesel generators are assumed to be lost, RCIC is designed to provide makeup water to the RPV. Diverse alternatives to RCIC are provided by the Combustion Turbine Generator (CTG) and the AC-Independent Water Addition (ACIWA) mode of RHR(C) (References 13 and 14). If RCIC is inoperable, water can be injected into the RPV either by powering other ECCS subsystems from the CTG or by the Fire Protection System (FPS) using the ACIWA mode of RHR(C).

The ADS (Ref. 1) consists of 8 of the 18 S/RVs. It is designed to provide depressurization of the primary system during a small break LOCA if RCIC and HPCF fail or are unable to maintain required water level in the RPV. ADS operation reduces the RPV pressure to within the operating pressure range of the low pressure ECCS subsystems (LPFL), so that these subsystems can provide core cooling. Each ADS valve is supplied with pneumatic power from its own dedicated accumulator located in the drywell~~, or from the atmospheric control system (ACS) directly when pneumatic power from the accumulators is not needed~~. The ACS ~~also~~ supplies the nitrogen (at pressure) necessary to assure the ADS accumulators remain charged for use in emergency actuation. If nitrogen is not available from the ACS, nitrogen is supplied from the High Pressure Nitrogen Gas Supply System via high pressure nitrogen gas storage bottles.

STD DEP 8.3-1

LCO

Each ECCS subsystem and eight ADS valves are required to be OPERABLE. The ECCS subsystems are defined as the three LPFL subsystems, the two HPCF subsystems, and the RCIC System. The high pressure ECCS subsystems are defined as the two HPCF subsystems and the RCIC System.

The CTG, when used as a temporary substitute for the loss of RCIC must be capable of starting, accelerating to required speed and voltage, and of being manually configured to provide power to the ESF bus. This sequence must be accomplished in less than 10 minutes. The CTG must also be capable of accepting required loads and maintaining rated frequency and voltage when connected to the ESF bus. The 10-minute starting time takes into account the capacity and capability of the remaining AC sources, reasonable time for startup of the CTG, and the low probability of a DBA occurring during this period.

With less than the required number of ECCS subsystems OPERABLE during a limiting design basis LOCA concurrent with the worst case single failure, the margins to the limits specified in 10 CFR 50.46 (Ref. 7) would be reduced. Furthermore, all ECCS subsystems are assumed to be initially available in the comprehensive set of analyses performed to satisfy the single failure criterion required by 10 CFR 50.46 (Ref. 7). Thus all ECCS subsystems must be OPERABLE. The ECCS is supported by other systems that provide automatic ECCS initiation signals (LCO 3.3.1.1, "SSLC Sensor Instrumentation" and LCO 3.3.1.4, "ESF Actuation Instrumentation"), cooling and service water to cool rooms containing ECCS equipment (LCO 3.7.1, "Reactor Building Cooling Water (RCW) System, Reactor Service Water (RSW) System and Ultimate Heat Sink (UHS) – Operating")~~, LCO 3.7.2, "RCW/RSW and UHS – Shutdown" and LCO 3.7.3 "RCW/RSW and UHS – Refueling"),~~ and electrical power (LCO 3.8.1, "AC Sources – Operating," and LCO 3.8.4, "DC Sources – Operating").

SURVEILLANCE REQUIREMENTS

SR 3.5.1.9

A manual actuation of each ADS valve is performed to verify that the valve and solenoids are functioning properly and that no blockage exists in the S/RV discharge lines. This is demonstrated by the response of the turbine control or bypass valve, by a change in the measured steam flow, or by any other method suitable to verify steam flow. Adequate reactor steam dome pressure must be available to perform this test to avoid damaging the valve. Sufficient time is therefore allowed, after the required pressure is achieved, to perform this test. Adequate pressure at which this test is to be performed is [6.55 MPaG] (the pressure recommended by the valve manufacturer). Reactor startup is allowed prior to performing this test because valve OPERABILITY and the setpoints for overpressure protection are verified, per ASME requirements, prior to valve installation. Therefore, this SR is modified by a Note that states the Surveillance is not required to be performed until 12 hours after reactor steam dome pressure is [6.55 MPaG]. SR 3.5.1.8 and SRs in LCO 3.3.1.1 and LCO 3.3.1.4 overlap this Surveillance to provide complete testing of the assumed safety function.

The Frequency is based on the need to perform this Surveillance under the conditions that apply during a plant outage and the potential for an unplanned transient if the Surveillance were performed with the reactor at power. Operating experience has shown that these components usually pass the SR when performed at the 18 month Frequency, which is based on the refueling cycle. Therefore, the Frequency was concluded to be acceptable from a reliability standpoint.

[This page intentionally left blank]

B 3.5 EMERGENCY CORE COOLING SYSTEMS (ECCS)

B 3.5.2 ECCS – Shutdown

BASES

The information in this section of the reference ABWR DCD, including all subsections, is incorporated by reference with no departures, but the following site specific supplements. The site specific supplements partially address COL License Information Item 16.1.

SURVEILLANCE REQUIREMENTS

SR 3.5.2.1 and SR 3.5.2.2

The minimum water level of 7 m required for the suppression pool is periodically verified to ensure that the suppression pool will provide adequate net positive suction head (NPSH) for the ECCS pumps, recirculation volume, and vortex prevention. With the suppression pool water level less than the required limit, all ECCS injection subsystems are inoperable.

*When the suppression pool level is < 7 m, the HPCF is considered OPERABLE only if it can take suction from the CST and the CST water level is sufficient to provide the required NPSH for the HPCF pump. Therefore, a verification that either the suppression pool water level is ≥ 7 m or the HPCF System is aligned to take suction from the CST and the CST contains ≥ [*700,000*] liters of water, equivalent to [*5.4*] m, ensures that the HPCF System can supply makeup water to the RPV.*

The 12 hour Frequency of these SRs was developed considering operating experience related to suppression pool and CST water level variations and instrument drift during the applicable MODES. Furthermore, the 12 hour Frequency is considered adequate in view of other indications in the control room, including alarms, to alert the operator to an abnormal suppression pool or CST water level condition.

[This page intentionally left blank]

B 3.6 CONTAINMENT SYSTEMS

B 3.6.1.1 Primary Containment

BASES

The information in this section of the reference ABWR DCD, including all subsections, is incorporated by reference with the following departures and supplements. The site-specific supplements partially address COL License Information Item 16.1.

STD DEP 6.2-2
STD DEP 16.3-43
STD DEP 16.3-45

BACKGROUND

The isolation devices for the penetrations in the primary containment boundary are a part of the containment leak tight barrier. To maintain this leak tight barrier:

a. All penetrations required to be closed during accident conditions are either:

1. capable of being closed by an OPERABLE automatic Containment Isolation System, or

2. closed by manual valves, blind flanges, or de-activated automatic valves secured in their closed positions, except as provided in LCO 3.6.1.3, "Primary Containment Isolation Valves (PCIVs)";

STD DEP 16.3-43

b. The primary containment air locks are OPERABLE, except as provided in LCO 3.6.1.2, "Primary Containment Air Locks";

c. The sealing mechanism associated with a penetration (e.g., welds, bellows, or o-rings) is OPERABLE.

APPLICABLE SAFETY ANALYSES

The safety design basis for the primary containment is that it must withstand the pressures and temperatures of the limiting DBA without exceeding the design leakage rate.

The DBA that postulates the maximum release of radioactive material within primary containment is a LOCA. In the analysis of this accident, it is assumed that primary containment is OPERABLE such that release of fission products to the environment is controlled by the rate of primary containment leakage.

Analytical methods and assumptions involving the primary containment are presented in References 1 and 2. The safety analyses assume a nonmechanistic fission product release following a DBA, which forms the basis for determination of offsite doses. The fission product release is, in turn, based on an assumed leakage rate from the primary containment. OPERABILITY of the primary containment ensures that the leakage rate assumed in the safety analyses is not exceeded.

STD DEP 6.2-2

The maximum allowable leakage rate for the primary containment (La) is 0.5% by weight of the containment air per 24 hours at the ~~maximum~~ calculated *peak containment pressure (P_a) of ~~0.269 MPaG~~ ~~279.6~~* 281.8 kPaG *or ~~[~~* 0.257 *~~]~~% by weight of the containment air per 24 hours at the reduced pressure of Pt of ~~[~~* 144.8 *~~]~~ ~~MPaG~~*kPaG *(Ref. 1).*

SURVEILLANCE REQUIREMENTS

SR 3.6.1.1.1

Maintaining the primary containment OPERABLE requires compliance with the visual examinations and leakage rate test requirements of 10 CFR 50, Appendix J (Ref. 3), as modified by approved exemptions. Failure to meet air lock leakage testing (SR 3.6.1.2.1), ~~[~~resilient seal primary containment purge valve leakage testing (SR 3.6.1.3.7),~~]~~ main steam isolation valve leakage (SR 3.6.1.3.13), or hydrostatically tested valve leakage (SR 3.6.1.3.12) does not necessarily result in a failure of this SR. The impact of the failure to meet these SRs must be evaluated against the Type A, B, and C acceptance criteria of 10 CFR 50, Appendix J. The Frequency is required by 10 CFR 50, Appendix J (Ref. 3), as modified by approved exemptions. Thus, SR 3.0.2 (which allows Frequency extensions) does not apply.

STD DEP 6.2-2

STD DEP 16.3-45

REFERENCES

1. ~~*DCD Tier 2, Section 6.2.*~~WCAP-17058, June 2009

2. *DCD Tier 2, Section ~~15.1~~*15.6.

3. *10 CFR 50, Appendix J.*

B 3.6 CONTAINMENT SYSTEMS

B 3.6.1.2 Primary Containment Air Locks

BASES

The information in this section of the reference ABWR DCD, including all subsections, is incorporated by reference with the following departures and site-specific supplement. The site-specific supplement partially addresses COL License Information Item 16.1.

STD DEP 6.2-2
STD DEP 16.3-70

BACKGROUND

The primary containment air locks form part of the primary containment pressure boundary. As such, air lock integrity and leak tightness are essential for maintaining primary containment leakage rate to within limits in the event of a DBA. Not maintaining air lock integrity or leak tightness may result in a leakage rate in excess of that assumed in the unit safety analysis. ~~SR 3.6.1.1.1~~ SR 3.6.1.2.1 *leakage rate requirements conform with 10 CFR 50, Appendix J (Ref. 2), as modified by approved exemptions.*

STD DEP 6.2-2

APPLICABLE SAFETY ANALYSES

The DBA that postulates the maximum release of radioactive material within primary containment is a LOCA. In the analysis of this accident, it is assumed that primary containment is OPERABLE, such that release of fission products to the environment is controlled by the rate of primary containment leakage. The primary containment is designed with a maximum allowable leakage rate (L_a) of 0.5%(excluding MSIV leakage) by weight of the containment air per 24 hours at the calculated maximum peak containment pressure (P_a) of ~~0.269 MPaG~~ 281.8 kPaG *(Ref. 3). This allowable leakage rate forms the basis for the acceptance criteria imposed on the SRs associated with the air lock.*

SURVEILLANCE REQUIREMENTS

SR 3.6.1.2.1

*Maintaining primary containment air locks OPERABLE requires compliance with the leakage rate test requirements of 10 CFR 50, Appendix J (Ref. 2), as modified by approved exemptions. This SR reflects the leakage rate testing requirements with respect to air lock leakage (Type B leakage tests). The acceptance criteria were established ~~[~~*based on the type of door seal used and will be verified *during initial air lock and primary containment OPERABILITY testing~~]~~. The periodic testing requirements verify that the air lock leakage does not exceed the allowed fraction of the overall primary containment leakage rate. The Frequency is required by 10 CFR 50, Appendix J (Ref. 2), as modified by approved exemptions. Thus, SR 3.0.2 (which allows Frequency extensions) does not apply.*

[This page intentionally left blank]

B 3.6 CONTAINMENT SYSTEMS

B 3.6.1.3 Primary Containment Isolation Valves (PCIVs)

BASES

The information in this section of the reference ABWR DCD, including all subsections, is incorporated by reference with the following departures and site-specific supplements. The site-specific supplements partially address COL License Information Item 16.1.

STD DEP 16.3-73
STD DEP 16.3-74

STD DEP 16.3-73

BACKGROUND

The primary containment purge lines are 550 mm in diameter; vent lines are 550 mm in diameter. The 550 mm primary containment purge valve~~s~~ are normally maintained closed in MODES 1, 2, and 3 to ensure leak tightness. The isolation valve on the 550 mm vent line~~s~~ from the drywell *ha~~ve~~*s a *50 mm bypass line around ~~them~~* it *for use during normal reactor operation. ~~Two additional redundant excess flow isolating dampers are provided on the vent line upstream of the Standby Gas Treatment (SGT) System filter trains. These isolation dampers, together with the~~*The *PCIVs~~,~~ will* close before fuel failure and *prevent high pressure from reaching the SGT System filter trains in the unlikely event of a loss of coolant accident (LOCA) during venting. ~~Closure of the excess flow isolation dampers will not prevent the SGT System from performing its design function (that is, to maintain a negative pressure in the secondary containment). To ensure that a vent path is available, a 50 mm bypass line is provided around the dampers.~~*

STD DEP 16.3-73

APPLICABLE SAFETY ANALYSES

The DBAs that result in a release of radioactive material within primary containment are a LOCA and a main steam line break (MSLB). In the analysis for each of these accidents, it is assumed that PCIVs are either closed or close within the required isolation times following event initiation. This ensures that potential leakage paths to the environment through PCIVs (and primary containment purge valves) are minimized. Of the events analyzed in Reference 1, the MSLB is the most limiting event due to radiological consequences. The closure time of the main steam isolation valves (MSIVs) is the most significant variable from a radiological standpoint. The MSIVs are required to close within 3 to 4.5 seconds; therefore, the 4.5 second closure time is assumed in the analysis. The safety analyses do not make any explicit assumptions concerning *~~assume that~~ the purge valves ~~were closed at~~ at event initiation. Likewise, it is assumed that the primary containment is isolated such that release of fission products to the environment is controlled by the rate of primary containment leakage.*

~~The DBA analysis assumes that within 60 seconds of the accident, isolation of the primary containment is complete and leakage is~~

~~*terminated, except for the maximum allowable leakage, L_a. The primary containment isolation total response time of 60 seconds includes signal delay, diesel generator startup (for loss of offsite power), and PCIV stroke times.*~~

The single failure criterion required to be imposed in the conduct of unit safety analyses was considered in the original design of the primary containment purge valves. Two valves in series on each purge line provide assurance that both the supply and exhaust lines could be isolated even if a single failure occurred.

~~*The primary containment purge valves may be unable to close in the environment following a LOCA. Therefore, each of the purge valves is required to remain sealed closed during MODES 1, 2, and 3. In this case, the single failure criterion remains applicable to the primary containment purge valve due to failure in the control circuit associated with each valve. Again, the primary containment purge valve design precludes a single failure from compromising primary containment OPERABILITY as long as the system is operated in accordance with this LCO.*~~

PCIVs satisfy Criterion 3 of the NRC Policy Statement.

LCO

STD DEP 16.3-74 *The normally closed isolation valves are considered OPERABLE when manual valves are closed, automatic valves are de-activated and secured in their closed position, blind flanges are in place, and closed systems are intact. These passive isolation valves and devices are those listed in Reference 2. Purge valves with resilient seals, ~~secondary bypass valves,~~ MSIVs, ~~EFCVs,~~ and hydrostatically tested valves must meet additional leakage rate requirements. Other PCIV leakage rates are addressed by LCO 3.6.1.1, "Primary Containment," as Type C testing.*

ACTIONS

A.1 and A.2

STD DEP 16.3-105

With one or more penetration flow paths with one PCIV inoperable except for purge valve leakage not within limit, the affected penetration flow paths must be isolated. An analysis of the effects of flow-induced vibration on the remaining open MSIVs and other critical components in the reactor and steam systems must be performed prior to continued operation with an isolated main steamline. Continued plant operation must remain within the bounds of this analysis. *The method of isolation must include the use of at least one isolation barrier that cannot be adversely affected by a single active failure. Isolation barriers that meet this criterion are a closed and de-activated automatic valve, a closed manual valve, a blind flange, and a check valve with flow through the valve secured. For penetration isolated in accordance with Required Action A.1, the valve used to isolate the penetration should be the closest available valve to the primary containment. The Required Action must be completed within the 4 hour Completion Time (8 hours for main steamlines). The Completion Time of 4 hours is reasonable considering the time required to isolate the penetration and the relative importance of supporting primary containment OPERABILITY during MODES 1, 2, and 3. For main steamlines, an 8 hour Completion Time is allowed. The Completion Time of 8 hours for the main steamlines allows a period of time to restore the MSIVs to OPERABLE status given the fact that MSIV closure will result in isolation of the main steamline(s) and a potential for plant shutdown.*

STD DEP 16.3-74

For affected penetrations that have been isolated in accordance with Required Action A.1, the affected penetration flow path(s) must be verified to be isolated on a periodic basis. This is necessary to ensure that primary containment penetrations required to be isolated following an accident, and no longer capable of being automatically isolated, will be in the isolation position should an event occur. This Required Action does not require any testing or valve manipulation. Rather, it involves verification, through a system walkdown, that those valves outside containment and capable of potentially being mispositioned are in the correct position. The Completion Time of "once per 31 days for isolation devices outside primary containment, drywell, and steam tunnel*" is appropriate because the valves are operated under administrative controls and the probability of their misalignment is low. For valves inside primary containment, the time period specified "prior to entering MODE 2 or 3 from MODE 4, if primary containment was de-inerted while in MODE 4, if not performed within the previous 92 days" is based on engineering judgment and is considered reasonable in view of the inaccessibility of the valves and other administrative controls ensuring that valve misalignment is an unlikely possibility.*

STD DEP 16.3-74

D.1, D.2, and D.3

In the event one or more containment purge valves are not within the purge valve leakage limits, purge valve leakage must be restored to within limits or the affected penetration must be isolated. The method of isolation must be by the use of at least one isolation barrier that cannot be adversely affected by a single active failure. Isolation barriers that meet this criterion are a [closed and deactivated automatic valve, closed manual valve, and

ACTIONS (continued)

blind flange~~]~~. A purge valve with resilient seals utilized to satisfy Required Action D.1 must have been demonstrated to meet the leakage requirements of SR 3.6.1.3.7. The specified Completion Time is reasonable, considering that one containment purge valve remains closed (refer to the SR 3.6.1.3.1), so that a gross breach of containment does not exist.

In accordance with Required Action D.2, this penetration flow path must be verified to be isolated on a periodic basis. The periodic verification is necessary to ensure that containment penetrations required to be isolated following an accident, which are no longer capable of being automatically isolated, will be in the isolation position should an event occur. This Required Action does not require any testing or valve manipulation. Rather, it involves verification, through a system walkdown, that those isolation devices outside containment and potentially capable of being mispositioned are in the correct position.

For the isolation devices inside containment, the time period specified as "prior to entering MODE 4 from MODE 5 if not performed within the previous 92 days" is based on engineering judgment and is considered reasonable in view of the inaccessibility of the isolation devices and other administrative controls that will ensure that isolation device misalignment is an unlikely possibility.

~~[~~For the containment purge valve with resilient seal that is isolated in accordance with Required Action D.1, SR 3.6.1.3.7 must be performed at least once every ~~[~~92~~]~~ days. This provides assurance that degradation of the resilient seal is detected and confirms that the leakage rate of the containment purge valve does not increase during the time the penetration is isolated. The normal Frequency for SR 3.6.1.3.7, 184 days, is based on an NRC initiative addressing the issue of resilient seal reliability in these purge valves. Since more reliance is placed on a single valve while in this Condition, it is prudent to perform the SR more often. Therefore, a Frequency of once per ~~[~~92~~]~~ days was chosen and has been shown to be acceptable based on operating experience.~~]~~

SURVEILLANCE REQUIREMENTS

STD DEP 16.3-74

SR 3.6.1.3.9

Automatic PCIVs close on a primary containment isolation signal to prevent leakage of radioactive material from primary containment following a DBA. This SR ensures that each automatic PCIV will actuate to its isolation position on a primary containment isolation signal. The ~~LOGIC SYSTEM FUNCTIONAL TEST~~ COMPREHENSIVE FUNCTIONAL TESTs (SR 3.3.1.1.9 and SR 3.3.1.4.4) in LCO 3.3.1.1 and LCO 3.3.1.4 *~~in SR 3.3.6.3.6~~ overlap~~s~~ this SR to provide complete testing of the safety function. The 18 month Frequency was developed considering it is prudent that this Surveillance be performed only during a unit outage since isolation of penetrations would eliminate cooling water flow and disrupt the normal operation of many critical components. For some PCIVs, the Inservice Testing Program allows this surveillance to be performed during cold*

SURVEILLANCE REQUIREMENTS (continued)

shutdown, as opposed to a unit outage, provided the Frequency is no greater than 18 months. Operating experience has shown that these components usually pass this Surveillance when performed at the 18 month Frequency. Therefore, the Frequency was concluded to be acceptable from a reliability standpoint.

~~*SR 3.6.1.3.14*~~

~~*Reviewer's Note: This SR is only required for those plants with purge valves with resilient seals allowed to be open during [MODE 1, 2 or 3, or 4] and having blocking devices that are not permanently installed on the valves.*~~

~~*Verifying each 550 mm primary containment purge valve is blocked to restrict opening to £ [50]% is required to ensure that the valves can close under DBA conditions within the times assumed in the analysis of References 2 and 4.*~~

~~*[The SR is modified by a Note stating that this SR is only required to be met in MODES 1, 2, and 3.] If a LOCA occurs, the purge valves must close to maintain containment leakage within the values assumed in the accident analysis. At other times when purge valves are required to be capable of closing (e.g., during movement of irradiated fuel assemblies), pressurization concerns are not present, thus the purge valves can be fully open. The 18 month Frequency is appropriate because the blocking devices are typically removed only during a refueling outage.*~~

[This page intentionally left blank]

B 3.6 CONTAINMENT SYSTEMS

B 3.6.1.4 Drywell Pressure

BASES

The information in this section of the reference ABWR DCD, including all subsections, is incorporated by reference with the following departure.

STD DEP 6.2-2

APPLICABLE SAFETY ANALYSES

Primary containment performance is evaluated for the entire spectrum of break sizes for postulated LOCAs (Ref. 1). Among the inputs to the DBA is the initial primary containment internal pressure (Ref. 1). Analyses assume an initial drywell pressure of 5.20x10^{-3} MPaG. This limitation ensures that the safety analysis remains valid by maintaining the expected initial conditions and ensures that the peak LOCA drywell internal pressure does not exceed the maximum allowable of 0.310 MPaG.

The maximum calculated drywell pressure occurs during ~~the reactor blowdown phase of the DBA, which is determined to be~~ a feedwater line break. The calculated peak drywell pressure for this limiting event is ~~0.269 MPaG~~ 281.8 kPaG *(Ref. 1).*

[This page intentionally left blank]

B 3.6 CONTAINMENT SYSTEMS

B 3.6.1.5 Drywell Air Temperature

BASES

The information in this section of the reference ABWR DCD, including all subsections, is incorporated by reference with no departures or supplements.

[This page intentionally left blank]

B 3.6 CONTAINMENT SYSTEMS

B 3.6.1.6 Wetwell-to-Drywell Vacuum Breakers

BASES

The information in this section of the reference ABWR DCD, including all subsections, is incorporated by reference with the following departure.

STD DEP 16.3-34

LCO

All eight of the vacuum breakers must be OPERABLE for opening. All wetwell-to-drywell vacuum breakers, however, are required to be closed (except ~~during testing or~~ when the vacuum breakers are performing the intended design function). The vacuum breaker OPERABILITY requirement provides assurance that the drywell-to-wetwell negative differential pressure remains below the design value. The requirement that the vacuum breakers be closed ensures that there is no excessive bypass leakage should a LOCA occur.

SURVEILLANCE REQUIREMENTS

SR 3.6.1.6.1

Each vacuum breaker is verified closed (except ~~when being tested in accordance with SR 3.6.1.6.2 or~~ when performing its intended function) to ensure that this potential large bypass leakage path is not present. This Surveillance is performed by observing the vacuum breaker position indication or by increasing the drywell pressure by $3.43x10^{-3}$ MPa above the wetwell pressure and verifying that the pressure differential does not fall below $2.06x10^{-3}$ MPaD for 15 minutes without makeup. This criteria was developed assuming ideal gas behavior, a leakage area corresponding to 10% of the allowable leakage area, the average temperatures in the wetwell and drywell remained within ± 0.5ºC throughout the testing interval, and that adequate instrumentation exists to measure the pressure decay. Basing the test criteria on 10% of the allowable leakage area provides a large degree of margin in demonstrating that the vacuum breakers are adequately closed and sealed. Additionally, if the allowable leakage area were to exist, a pressure differential of ~~3.45~~3.43$x10^{-3}$ MPa would decay completely within 15 minutes. Maintaining the average temperatures of the wetwell and drywell is important because the pressure differentials in this test are relatively small and can be significantly impacted by small temperature changes. (However, if temperature control is a problem, new test parameters should be developed which take into account the normal temperature variations.)

[This page intentionally left blank]

B 3.6 CONTAINMENT SYSTEMS

B 3.6.2.1 Suppression Pool Average Temperature

BASES

The information in this section of the reference ABWR DCD, including all subsections, is incorporated by reference with the following departures.

STD DEP 16.3-32
STD DEP 16.3-33

LCO

A limitation on the suppression pool average temperature is required to provide assurance that the containment conditions assumed for the safety analyses are met. This limitation subsequently ensures that peak primary containment pressures and temperatures do not exceed maximum allowable values during a postulated DBA or any transient resulting in heatup of the suppression pool. The LCO requirements are:

STD DEP 16.3-33

a. *Average temperature ≤ 35ºC when ~~THERMAL POWER is < 1% RTP~~* THERMAL POWER is > 1% RTP *and no testing that adds heat to the suppression pool is being performed. This requirement ensures that licensing bases initial conditions are met.*

b. *Average temperature ≤ 40.6ºC when ~~THERMAL POWER is < 1% RTP~~* THERMAL POWER > 1% RTP *and testing that adds heat to the suppression pool is being performed. This required value ensures that the unit has testing flexibility, and was selected to provide margin below the 43.3ºC limit at which reactor shutdown is required. When testing ends, temperature must be restored to ≤ 35ºC within 24 hours according to Required Action A.2. Therefore, the time period that the temperature is > 35ºC is short enough not to cause a significant increase in unit risk.*

ACTIONS
STD DEP 16.3-32

D.1 and D.2

When the suppression pool temperature reaches 43.3ºC a reactor scram is automatically initiated. Additionally, when suppression pool temperature is > 43.3ºC, increased monitoring of pool temperature is required to ensure that it remains ≤ 48.9ºC. The once per 30 minute Completion Time is adequate, based on operating experience. Given the high suppression pool average temperature in this Condition, the monitoring Frequency is increased to twice that of Condition A. Furthermore, the 30 minute Completion Time is considered adequate in view of other indications available in the control room, including alarms, to alert the operator to an abnormal suppression pool average temperature condition. Additionally, the plant must be brought to a

ACTIONS (continued)

D.1 and D.2 (continued)

MODE in which the LCO does not apply. To achieve this status, the plant must be brought to at least MODE 4 within 36 hours. The allowed Completion Time is reasonable, based on operating experience, to reach the required plant condition from full power conditions in an orderly manner and without challenging plant systems.

E.1 ~~*and E.2*~~

If suppression pool average temperature cannot be maintained at ≤48.9°C, the plant must be brought to a MODE in which the LCO does not apply. To achieve this status, the reactor pressure must be reduced to < 1.38 MPaG within 12 hours~~, and the plant must be brought to at least MODE 4 within 36 hours~~. The allowed Completion Time is reasonable, based on operating experience, to reach the required plant conditions from full power conditions in an orderly manner and without challenging plant systems.

Continued addition of heat to the suppression pool with suppression pool temperature > 48.9°C could result in exceeding the design basis maximum allowable values for primary containment temperature or pressure. Furthermore, if a blowdown were to occur when the temperature was > 48.9°C, the maximum allowable bulk and local temperatures could be exceeded very quickly.

B 3.6 CONTAINMENT SYSTEMS

B 3.6.2.2 Suppression Pool Water Level

BASES

The information in this section of the reference ABWR DCD, including all subsections, is incorporated by reference with no departures or supplements.

[This page intentionally left blank]

B 3.6 CONTAINMENT SYSTEMS

B 3.6.2.3 Residual Heat Removal (RHR) Suppression Pool Cooling

BASES

The information in this section of the reference ABWR DCD, including all subsections, is incorporated by reference with the following departures.

STD DEP 16.3-36
STD DEP 16.3-37

BACKGROUND
STD DEP 16.3-36

The combined heat removal capability of two RHR subsystems operating simultaneously is sufficient to meet the overall DBA pool cooling requirement for loss of coolant accidents (LOCAs) and transient events such as a turbine trip or stuck open safety/relief (S/RV). S/RV leakage and ~~high pressure core injection and~~ Reactor Core Isolation Cooling System testing increase suppression pool temperature more slowly. The RHR Suppression Pool Cooling System is also used to lower the suppression pool water bulk temperature following such events.

REFERENCES

1. *DCD Tier 2, Section 6.2.*

STD DEP 16.3-37

2. ~~*ASME, Boiler and Pressure Vessel Code, Section XI*~~ Not Used.

[This page intentionally left blank]

B 3.6 CONTAINMENT SYSTEMS

B 3.6.2.4 Residual Heat Removal (RHR) Containment Spray

BASES

The information in this section of the reference ABWR DCD, including all subsections, is incorporated by reference with no departures or supplements.

[This page intentionally left blank]

B 3.6 CONTAINMENT SYSTEMS

B 3.6.3.1 Primary Containment Hydrogen Recombiners

BASES

The information in this section of the reference ABWR DCD, including all subsections, is deleted in accordance with the following departure.

STD DEP T1 2.14-1

Not Used.

[This page intentionally left blank]

B 3.6 CONTAINMENT SYSTEMS

B 3.6.3.2 Primary Containment Oxygen Concentration

BASES

The information in this section of the reference ABWR DCD, including all subsections, is incorporated by reference with the following departure.

STD DEP T1 2.14-1

BACKGROUND

All nuclear reactors must be designed to withstand events that generate hydrogen either due to the zirconium metal water reaction in the core or due to radiolysis.

The primary method to control combustible gases is to inert the primary containment. With the primary containment inert, that is, oxygen concentration < 3.5 volume percent (v/o), a combustible mixture cannot be present in the primary containment for any hydrogen concentration. ~~*The capability to inert the primary containment and maintain oxygen < 3.5 v/o works together with the hydrogen recombiners (LCO 3.6.3.1, "Primary Containment Hydrogen Recombiners") to provide redundant and diverse methods to mitigate events that produce hydrogen. For example, an event that rapidly generates hydrogen from zirconium metal water reaction will result in excessive hydrogen in primary containment, but oxygen concentration will remain < 3.5 v/o and no combustion can occur. Long term generation of both hydrogen and oxygen from radiolytic decomposition of water may eventually result in a combustible mixture in primary containment, except that the hydrogen recombiners remove hydrogen and oxygen gases faster than they can be produced from radiolysis and again no combustion can occur.*~~ *This LCO ensures that oxygen concentration does not exceed 3.5 v/o during operation in the applicable conditions.*

APPLICABLE SAFETY ANALYSES

The Reference 1 calculations assume that the primary containment is inerted when a Design Basis Accident loss of coolant accident occurs. Thus, the hydrogen assumed to be released to the primary containment as a result of metal water reaction in the reactor core will not produce combustible gas mixtures in the primary containment. ~~*Oxygen, which is subsequently generated by radiolytic decomposition of water, is recombined by the hydrogen recombiners (LCO 3.6.3.1) more rapidly than it is produced.*~~

ACTIONS

A.1

If oxygen concentration is ≥ 3.5 v/o at any time while operating in MODE 1, with the exception of the relaxations allowed during startup and shutdown, oxygen concentration must be restored to < 3.5 v/o within 24 hours. The 24 hour Completion Time is allowed when oxygen concentration is ≥ 3.5 v/o because of the ~~availability of other hydrogen mitigating systems (e.g., hydrogen recombiners) and the~~ low probability of an event that would generate significant amounts of hydrogen occurring during this period.

B 3.6 CONTAINMENT SYSTEMS

B 3.6.4.1 Secondary Containment

BASES

The information in this section of the reference ABWR DCD, including all subsections, is incorporated by reference with the following departures.

STD DEP T1 16.3-29
STD DEP T1 16.3-30

APPLICABILITY

In MODES 1, 2, and 3, a LOCA could lead to a fission product release to primary containment that leaks to secondary containment. Therefore, secondary containment OPERABILITY is required during the same operating conditions that require primary containment OPERABILITY.

In MODES 4 and 5, the probability and consequences of the LOCA are reduced due to the pressure and temperature limitations in these MODES. Therefore, maintaining secondary containment OPERABLE is not required in MODE 4 or 5 to ensure a control volume, except for other situations for which significant releases of radioactive material can be postulated, such as during operations with a potential for draining the reactor vessel (OPDRVs), during CORE ALTERATIONS, or during movement of irradiated fuel assemblies in ~~the primary or~~ secondary containment.

SURVEILLANCE REQUIREMENTS *SR 3.6.4.1.4 and SR 3.6.4.1.5*

STD DEP T1 16.3-29

The SGT System exhausts the secondary containment atmosphere to the environment through appropriate treatment equipment. To ensure that all fission products are treated, SR 3.6.4.1.4 verifies that the SGT System will rapidly establish and maintain a pressure in the secondary containment that is less than the lowest postulated pressure external to the secondary containment boundary. This is confirmed by demonstrating that one SGT subsystem will draw down the secondary containment to ≥ 6.4 mm of water gauge vacuum in ≤ ~~120 seconds~~ 20 minutes*. This cannot be accomplished if the secondary containment boundary is not intact. SR 3.6.4.1.5 demonstrates that one SGT subsystem can maintain ≥ 6.4 mm of water gauge vacuum for 1 hour at a flow rate ≤ 6800 m^3/h. The 1 hour test period allows secondary containment to be in thermal equilibrium at steady state conditions. Therefore, these two tests are used to ensure secondary containment boundary integrity. Since these SRs are secondary containment tests, they need not be performed with each SGT subsystem. The SGT subsystems are tested on a STAGGERED TEST BASIS, however, to ensure that in addition to the requirements of LCO 3.6.4.3, either SGT subsystem will perform this test. The 18 month Frequency is based on the need to perform this Surveillance under the conditions that apply during a plant outage and the potential for an unplanned transient if the Surveillance were performed with the reactor at power. Operating experience has shown these components usually pass the Surveillance when performed at the 18 month Frequency. Therefore, the Frequency was concluded to be acceptable from a reliability standpoint.*

B 3.6 CONTAINMENT SYSTEMS

B 3.6.4.2 Secondary Containment Isolation Valves (SCIVs)

BASES

The information in this section of the reference ABWR DCD, including all subsections, is incorporated by reference with no departures or supplements.

[This page intentionally left blank]

B 3.6 CONTAINMENT SYSTEMS

B 3.6.4.3 Standby Gas Treatment (SGT) System

BASES

The information in this section of the reference ABWR DCD, including all subsections, is incorporated by reference with the following departures and site-specific supplement. The site-specific supplement partially addresses COL License Information Item 16.1.

STD DEP 16.3-31

REFERENCES

1. *10 CFR 50, Appendix A, GDC 41.*

2. *DCD Tier 2, Section ~~6.2.3~~6.5.1.*

3. *DCD Tier 2, Section 15.6.5.*

4. *DCD Tier 2, Section 15.7.4.*

5. *Regulatory Guide 1.52, Rev. ~~[2]~~.*

[This page intentionally left blank]

B 3.7 PLANT SYSTEMS

B 3.7.1 Reactor Building Cooling Water (RCW) System, Reactor Service Water (RSW) System, and Ultimate Heat Sink (UHS) – Operating

BASES

The information in this section of the reference ABWR DCD, including all subsections, is incorporated by reference with the following departure and site-specific supplements. The site-specific supplements partially address COL License Information Item 16.1.

STD DEP 16.3-16

BACKGROUND

The UHS ~~is~~ includes a dedicated water storage basin for each unit. The UHS consists of *~~[a spray pond with six spray networks. Two spray networks are assigned to each UHS division and are mechanically separated from the other divisional networks. The networks and their supply piping are suspended above the pond surface on reinforced concrete columns]~~* three mechanically and electrically independent cooling tower divisions designed to remove heat from the respective RCW/RSW division. Each unit's UHS structure consists of six cooling tower cells, of which two cells are dedicated to each of the three UHS divisions. During normal plant operation, all three divisions are in service with one cooling tower cell per division in operation. *~~The [spray pond]~~*Each unit's UHS basin *is sized such that sufficient water inventory is available for all RCW/RSW System post LOCA cooling requirements for a 30 day period with no external makeup water source available (Regulatory Guide 1.27, Ref. 1). Normal makeup for each ~~[spray pond]~~* UHS basin *is provided automatically by the ~~[power cycle heat sink makeup line]~~* onsite well water*.*

Cooling water is pumped from the ~~[spray pond]~~ UHS basin *by the RSW pump(s) to the RCW/RSW heat exchangers through the three main redundant supply headers (Divisions A, B and C). In a separate closed loop, cooling water is circulated by the pump(s) in each RCW division through the essential components to be cooled and back through the RCW/RSW heat exchangers. Thus, the heat removed from the components by the RCW is transferred to the RSW, and then ultimately rejected to the UHS.*

Divisions A, B and C supply cooling water to redundant equipment required for a safe reactor shutdown. Additional information on the design and operation of the RCW/RSW System and UHS along with the specific equipment for which the RCW/RSW System supplies cooling water is provided in Sections 9.2.11 and 9.2.15 and Tables 9.2-4A, B, and C (Refs. 2 and 3, respectively). The combined three division RCW/RSW System is designed to withstand a single active or passive failure coincident with a loss of offsite power, without losing the capability to supply adequate cooling water to equipment required for safe reactor shutdown.

Following a DBA or transient, the RCW/RSW System and UHS cooling tower fans *will operate automatically without operator action. Manual initiation of supported systems is, however, performed for some cooling operations (e.g., shutdown cooling).*

LCO

The OPERABILITY of Divisions A, B and C of the RCW/RSW System is required to ensure the effective operation of the RHR System in removing heat from the reactor, and the effective operation of other safety related equipment during a DBA or transient. Requiring all three divisions to be OPERABLE ensures that two divisions will be available to provide adequate capability to meet cooling requirements of the equipment required for safe shutdown in the event of a single failure.

A division is considered OPERABLE when:

a. All four associated RCW/RSW pumps are OPERABLE;

b. All three RCW/RSW heat exchangers are OPERABLE;

c. The associated UHS with two cooling tower cells *is OPERABLE; and*

d. The associated piping, valves, instrumentation, and controls required to perform the safety related function are OPERABLE.

OPERABILITY of the UHS is based on a maximum RSW water temperature of ~~[33.3~~ 32.2*~~]~~°C at the inlet to the RCW/RSW heat exchangers with OPERABILITY of each division requiring a minimum water level at or above elevation ~~[mean sea level (equivalent to an indicated level of ≥ [ ] m) and six OPERABLE spray networks] [~~* 23.55 *~~]~~ m MSL (equivalent to an indicated level of ~~[~~* -19.28*~~]~~ m)* and six OPERABLE cooling tower cells*. The maximum RSW water temperature of ~~[33.3~~* 32.2*~~]~~°C will insure that the peak temperature at the inlet to the RCW/RSW heat exchangers will not exceed the designed value of 35°C during a LOCA.*

The isolation of the RCW/RSW System to components or systems may render those components or systems inoperable, but does not affect the OPERABILITY of the RCW/RSW System.

ACTIONS

A.1

If one RCW pump and/or one RSW pump and/or one RCW/RSW heat exchanger and/or one ~~[spray network]~~ cooling tower cell *in the UHS in the same division is inoperable, action must be taken to restore the inoperable component(s), and thus the division affected, to OPERABLE status within 14 days. In this condition sufficient equipment is still available to provide cooling water to the required safety related components and sufficient heat removal capacity is still available to adequately cool safety related loads, even assuming the worst case single failure. Therefore, continued operation for a limited time is justified.*

B.1 and B.2

If one RCW/RSW division or both ~~[spray network]~~ cooling tower cells *in one UHS division is inoperable for reasons other than Condition A, then, immediately, those required feature(s) supported by the inoperable RCW/RSW division must be declared inoperable (e.g., Emergency Diesel Generator, RHR heat exchanger, etc.) and the applicable Conditions and Required Actions of the appropriate LCOs for the inoperable required feature(s) must be entered. For example, applicable Conditions of LCO 3.8.1, "AC Sources-Operating," LCO 3.4.7, "Residual Heat Removal (RHR) Shutdown Cooling System-Hot Shutdown," LCO 3.4.1, "Reactor Internal Pumps (RIP) Operating," LCO 3.6.1.5, "Drywell Air Temperature", LCO 3.6.2.3, "Suppression Pool Cooling," and LCO 3.6.2.4, "Containment Spray" be entered and the Required Actions taken if the inoperable RCW/RSW division results in an inoperable DG, RHR shutdown cooling, RIPS, drywell temperature increase due to inoperable drywell coolers, RHR suppression pool cooling, and RHR containment spray, respectively. This is in accordance with LCO 3.0.6 and ensures the proper actions are taken for these components.*

Additionally, immediate action must be taken to restore the inoperable RCW/RSW division or UHS ~~[spray network]~~ cooling tower cells *to OPERABLE status. This is consistent with the Required Actions of the applicable LCOs for those support feature(s) declared inoperable as a result of the inoperable RCW/RSW division.*

STD DEP 16.3-16

C.1~~ and C.2~~

If one RCW pump and/or one RSW pump and/or one RCW/RSW heat exchanger and/or one UHS ~~[spray network]~~ cooling tower cell *in the same division is inoperable in two or more separate divisions, one RCW/RSW or UHS ~~[spray network]~~* cooling tower *division must be restored to OPERABLE status within 7 days~~ and two RCW/RSW or UHS [spray network] divisions must be restored to OPERABLE status in 14 days~~. In this condition sufficient equipment is still available to provide cooling water to the required safety related components and sufficient heat removal capacity is still available to adequately cool safety related loads. Therefore, continued operation for a limited time is justified. However, in the degraded mode of this Condition, overall reliability and heat removal capability is reduced from that of Condition A, and thus a more restrictive Completion Time is imposed.*

The 7 ~~and 14~~ day Completion Time is reasonable, based on the low probability of an accident occurring during the period that one or more redundant components are inoperable in one or more divisions, the number of available redundant divisions, the substantial cooling capability still remaining in divisions in this Condition, and the expected high division availability afforded by a system where most of the equipment, including the minimum required for most functions, is normally operating. The Completion Time~~s are~~ is *also based on PRA sensitivity studies (Ref. 8).*

D.1 and D.2

If the RCW/RSW division cannot be restored to OPERABLE status within the associated Completion Time, or two or more RCW/RSW divisions are inoperable for reasons other than Condition C, or the UHS is determined inoperable, or two or more UHS ~~[spray network]~~ cooling tower *divisions are inoperable for reasons other than Condition C, the unit must be placed in a MODE in which the LCO does not apply. To achieve this status, the unit must be placed in at least MODE 3 within 12 hours and in MODE 4 within 36 hours. The allowed Completion Times are reasonable, based on operating experience, to reach the required unit conditions from full power conditions in an orderly manner and without challenging unit systems.*

SURVEILLANCE REQUIREMENTS

SR 3.7.1.1

This SR ensures adequate long term (30 days) cooling can be maintained. With the UHS water source below the minimum level, the affected RCW/RSW division must be declared inoperable. The 24 hour Frequency is based on operating experience related to trending of the parameter variations during the applicable MODES.

SURVEILLANCE REQUIREMENTS (continued)

SR 3.7.1.2

This SR verifies the water level in ~~each RSW pump well of~~ the ~~intake structure~~ UHS basin *to be sufficient for the proper operation of the RSW pumps (net positive suction head and pump vortexing are considered in determining this limit). The 24 hour Frequency is based on operating experience related to trending of the parameter variations during the applicable MODES.*

SR 3.7.1.3

Verification of the RSW water temperature at the inlet to the RCW/RSW heat exchanger ensures that the heat removal capability of the RCW/RSW System is within the assumptions of the DBA analysis. The 24 hour Frequency is based on operating experience related to trending of the parameter variations during the applicable MODES.

STD DEP 16.3-16

SR 3.7.1.4

Operating each cooling tower cell fan for ≥ 15 minutes ensures that all fans are OPERABLE and that all associated controls are functioning properly. It also ensures that fan or motor failure, or excessive vibration can be detected for corrective action. The 31 day Frequency is based on operating experience, the known reliability of the fan units, the redundancy available, and the low probability of significant degradation of the cooling tower fans occurring between Surveillances.

SR 3.7.1.~~4~~5

Verifying the correct alignment for each manual, power operated, and automatic valve in each RCW/RSW and associated UHS ~~[spray network]~~ cooling tower *division flow path provides assurance that the proper flow paths will exist for RCW/RSW operation. This SR does not apply to valves that are locked, sealed, or otherwise secured in position, since these valves were verified to be in the correct position prior to locking, sealing, or securing. A valve is also allowed to be in the nonaccident position and yet considered in the correct position, provided it can be automatically realigned to its accident position. This SR does not require any testing or valve manipulation; rather, it involves verification that those valves capable of potentially being mispositioned are in the correct position. This SR does not apply to valves that cannot be inadvertently misaligned, such as check valves.*

This SR is modified by a Note indicating that isolation of the RCW/RSW System to components or systems may render those components or systems inoperable, but does not affect the OPERABILITY of the RCW/RSW System. As such, when all RCW/RSW pumps, valves, and piping are OPERABLE, but a branch connection off of the main header is isolated, the RCW/RSW System is still OPERABLE. The 31 day Frequency is based on engineering judgment, is consistent with the procedural controls governing valve operation, and ensures correct valve positions.

SR 3.7.1.~~5~~6

This SR verifies the automatic isolation valves of the RCW/RSW System will automatically switch to the safety or emergency position to provide cooling water exclusively to the safety related equipment, and limited non-safety related equipment, during an accident event. This is demonstrated by use of an actual or simulated initiation signal. This SR also verifies the automatic start capability of the RCW/RSW pumps that are in standby and automatic valving in each of the standby RCW/RSW heat exchangers and associated UHS ~~*spray network*~~ cooling tower cell in each division. SRs in LCO 3.3.1.1 and LCO 3.3.1.4 overlap this SR to provide complete testing of the safety function.

Operating experience has shown that these components usually pass the SR when performed on the 18 month Frequency. Therefore, this Frequency is concluded to be acceptable from a reliability standpoint.

B 3.7 PLANT SYSTEMS

B 3.7.2 Reactor Building Cooling Water (RCW) System, Reactor Service Water (RSW) System and Ultimate Heat Sink (UHS) – Shutdown

BASES

The information in this section of the reference ABWR DCD, including all subsections, is incorporated by reference with the following departures and site-specific supplements. The site-specific supplements partially address COL License Information Item 16.1.

STD DEP 16.3-16
STD DEP 16.3-46

APPLICABLE SAFETY ANALYSES

The volume of water incorporated in the UHS is sized so that sufficient water inventory is available for all RCW/RSW System post LOCA cooling requirements for a 30 day period with no additional makeup water source available (Ref. 1). The ability of the RCW/RSW System to support long term cooling of the reactor or containment is assumed in evaluations of the equipment required for safe reactor shutdown presented in DCD Tier 2, Sections 9.2.11, 9.2.15, 6.2.1.1.3.3.1.4, and Chapter 15, (Refs 2, 3, and 4, respectively). The long term cooling analyses following a design basis LOCA demonstrates that only two divisions of the RCW/RSW System is required, post LOCA, to support long term cooling of the reactor or containment. To provide redundancy, a minimum of three RCW/RSW divisions are required to be OPERABLE in MODE~~S~~ 4 and MODE *5 ~~except~~ with ~~the reactor cavity to dryer/separator storage pool gate removed~~* irradiated fuel in the reactor pressure vessel *and water level ~~≥ 7.0 m~~* water level < 7.0 m *over the top of the reactor pressure vessel flange.*

The combined RCW/RSW System, together with the UHS, satisfy Criterion 3 of the NRC Policy Statement.

APPLICABILITY

In MODE 4 and MODE 5 ~~except~~ with ~~the reactor cavity to dryer/separator storage pool gate removed~~ irradiated fuel in the reactor pressure vessel *and water level ~~≥ 7.0 m~~* < *7.0 m over the top of the reactor pressure vessel flange, three divisions of the RCW/RSW System and the UHS are required to be OPERABLE to support OPERABILITY of the equipment serviced by the RCW/RSW System and UHS, and are required to be OPERABLE in these MODES.*

In MODES 1, 2, and 3, the OPERABILITY requirements of the RCW/RSW System and UHS are specified in LCO 3.7.1.

In MODE 5 with ~~the reactor cavity to dryer/separator storage pool gate removed~~ irradiated fuel in the reactor pressure vessel *and water level ≥ 7.0 m over the top of the reactor pressure vessel flange, the OPERABILITY requirements of the RCW/RSW System and UHS are specified in LCO 3.7.3, "RCW/RSW System and UHS – Refueling."*

STD DEP 16.3-16

ACTIONS

A. 1~~,~~ and *B. 1*~~*and B.2*~~

If one RCW pump and/or one RSW pump and/or one RCW/RSW heat exchanger and/or one ~~*[spray network]*~~ cooling tower cell *in the UHS in the same division is inoperable, action must be taken to restore the inoperable component(s) and thus the division affected, to OPERABLE status within 14 days. If one RCW pump and/or one RSW pump and/or one RCW/RSW heat exchanger and/or one UHS* ~~*[spray network]*~~ cooling tower cell *in the same division is inoperable in two or more separate divisions, one RCW/RSW or UHS* ~~*[spray network]*~~ cooling tower cell *division must be restored to OPERABLE status within 7 days*~~*and two RCW/RSW or UHS [spray network] cooling tower divisions must be restored to OPERABLE status in 14 days*~~*. In these conditions sufficient redundant equipment is still available to provide cooling water to the required safety related components and sufficient heat removal capacity is still available to adequately cool safety related loads. Therefore, continued operability of these divisions is justified.*

The Completion Times are reasonable, based on the low probability of an accident occurring while one or more components are inoperable in one or more divisions, the number of available divisions, the substantial cooling capability still remaining in a division(s) in this Condition, and the expected high division availability afforded by a system where most of the equipment, including the minimum required for most functions, is normally operating. However, in the degraded mode of Condition B, overall reliability and heat removal capability is reduced from that of Condition A, and thus a more restrictive Completion Time is imposed.

C.1

If the RCW/RSW or UHS ~~*[spray network]*~~ cooling tower *division(s) cannot be restored to OPERABLE status within the associated Completion Time(s), or one or more required RCW/RSW or UHS* ~~*[spray network]*~~ cooling tower *division(s) are inoperable for reasons other than Condition A or B or the UHS is inoperable, then immediately, those required feature(s) supported by the inoperable RCW/RSW division(s) or the UHS must be declared inoperable (i.e., Emergency Diesel Generator, RHR heat exchanger) and the applicable Conditions and Required Actions of the appropriate LCOs for the inoperable required feature(s) must be entered. For the applicable shutdown MODES, an inoperable RCW/RSW division or UHS requires entering the Conditions of LCO 3.8.11, "AC Sources-Shutdown (Low Water Level)," for a diesel generator made inoperable and either LCO 3.4.8, "Residual Heat Removal (RHR) Shutdown Cooling System – Cold Shutdown," or LCO 3.9.8, "Residual Heat Removal (RHR) Low Water Level" for RHR shutdown cooling made inoperable. This is in accordance with LCO 3.0.6 and ensures the proper actions are taken for these components.*

SURVEILLANCE REQUIREMENTS

SR 3.7.2.2.

This SR verifies the water level in the UHS basin ~~*each RSW pump well of the intake structure*~~ *to be sufficient for the proper operation of the RSW pumps (net positive suction head and pump vortexing are considered in determining this limit). The 24 hour Frequency is based on operating experience related to trending of the parameter variations during the applicable MODES.*

SR 3.7.2.3

Verification of the RSW water temperature at the inlet to the RCW/RSW heat exchangers ensures that the heat removal capability of the RCW/RSW System is within the assumptions of the DBA analysis. The 24 hour Frequency is based on operating experience related to trending of the parameter variations during the applicable MODES.

STD DEP 16.3-16

SR 3.7.2.4

Operating each cooling tower cell fan for ≥ 15 minutes ensures that all fans are OPERABLE and that all associated controls are functioning properly. It also ensures that fan or motor failure, or excessive vibration can be detected for corrective action. The 31 day Frequency is based on operating experience, the known reliability of the fan units, the redundancy available, and the low probability of significant degradation of the cooling tower fans occurring between Surveillances.

SR 3.7.2.~~*4*~~5

Verifying the correct alignment for each manual, power operated, and automatic valve in each RCW/RSW and associated UHS ~~*[spray network]*~~ cooling tower *division flow path provides assurance that the proper flow paths will exist for RCW/RSW operation. This SR does not apply to valves that are locked, sealed, or otherwise secured in position, since these valves were verified to be in the correct position prior to locking, sealing, or securing. A valve is also allowed to be in the nonaccident position and yet considered in the correct position, provided it can be automatically realigned to its accident position. This SR does not require any testing or valve manipulation; rather, it involves verification that those valves capable of potentially being mispositioned are in the correct position. This SR does not apply to valves that cannot be inadvertently misaligned, such as check valves.*

This SR is modified by a Note indicating that isolation of the RCW/RSW System to components or systems may render those components or systems inoperable, but does not affect the OPERABILITY of the RCW/RSW System. As such, when all RCW/RSW pumps, valves, and piping are OPERABLE, but a branch connection off the main header is isolated, the RCW/RSW System is still OPERABLE. The 31 day Frequency is based on engineering judgement, is consistent with the procedural controls governing valve operation, and ensures correct valve positions.

SURVEILLANCE REQUIREMENTS (continued)

SR 3.7.2.~~5~~6

This SR verifies that the automatic isolation valves of the RCW/RSW System will automatically switch to the safety or emergency position to provide cooling water exclusively to the safety related equipment, and limited non-safety related equipment, during an accident event. This is demonstrated by use of an actual or simulated initiation signal. This SR also verifies the automatic start capability of the RCW/RSW pumps that are in standby and automatic valving in each of the standby RCW/RSW heat exchangers and associated UHS ~~[spray network]~~ cooling tower cell*] in each division. SRs in LCO 3.3.1.1 and LCO 3.3.1.4 overlap this SR to provide complete testing of the safety function.*

Operating experience has shown that these components usually pass the SR when performed on the 18 month Frequency. Therefore, this Frequency is concluded to be acceptable from a reliability standpoint.

B 3.7 PLANT SYSTEMS

B 3.7.3 Reactor Building Cooling Water (RCW) System, Reactor Service Water (RSW) System and Ultimate Heat Sink (UHS) – Refueling

BASES

The information in this section of the reference ABWR DCD, including all subsections, is incorporated by reference with the following departures and site-specific supplements. The site-specific supplements partially address COL License Information Item 16.1.

STD DEP 16.3-16
STD DEP 16.3-46

STD DEP 16.3-46

BACKGROUND

A description of the RCW and RSW Systems and the UHS are provided in the Bases for LCO 3.7.1, "Reactor Building Cooling Water (RCW) System, Reactor Service Water (RSW) System and Ultimate Heat Sink (UHS) – Operating." In MODE 5 with irradiated fuel in the reactor pressure vessel and *the reactor vessel water level ≥ 7.0 m over the vessel flange the unit components to which the RCW/RSW System is required to supply cooling water is greatly reduced from normal operation. For example, LCO 3.8.2, "AC Sources – Refueling" and LCO 3.9.7, "RHR-High Water Level" require one DG and one RHR subsystem to be OPERABLE, respectively, and LCO 3.5.2, "ECCS-Shutdown" does not require any ECCS components to be OPERABLE for this condition.*

APPLICABLE SAFETY ANALYSES

The volume of water incorporated in the UHS is sized so that sufficient water inventory is available for all RCW/RSW System post LOCA cooling requirements for a 30 day period with no additional makeup water source available (Ref. 1). The ability of the RCW/RSW System to support long term cooling of the reactor or containment is assumed in evaluations of the equipment required for safe reactor shutdown presented in DCD Tier 2, Sections 9.2.11, 9.2.15, 6.2.1.1.3.3.1.4, and Chapter 15, (Refs 2, 3, and 4, respectively). With the unit in MODE 5 ~~*and*~~ *with* irradiated fuel in the reactor pressure vessel ~~*the reactor cavity to dryer/separator storage gate removed*~~ *and water level ≥ 7.0 m over the top of the reactor pressure vessel flange, the volume of water in the reactor vessel provides a heat sink for decay heat removal. However, to provide redundancy, a minimum of one RCW/RSW division is required to be OPERABLE.*

The combined RCW/RSW System, together with the UHS, satisfies Criterion 3 of the NRC Policy Statement.

LCO

One division of the RCW/RSW System and the UHS are required to be OPERABLE to ensure the effective operation of the RHR System in removing heat from the reactor. LCO 3.9.7, "RHR – High Water Level" requires that one RHR subsystem be OPERABLE and in operation in MODE 5 with irradiated fuel in the reactor pressure vessel *and with the water level ≥ 7.0 m above the RPV flange. Only one subsystem is required because the volume of water above the RPV flange provides backup decay heat removal capability. Operability of the UHS and the RCW/RSW System is defined in the Basis for LCO 3.7.1.*

APPLICABILITY

In MODE 5 with irradiated fuel in the reactor pressure vessel ~~*the reactor cavity to dryer/separator storage gate removed*~~ *and water level ≥ 7.0 m over the top of the reactor pressure vessel flange, one division of the RCW/RSW System and the UHS are required to be OPERABLE to support OPERABILITY of the equipment serviced by the RCW/RSW System and UHS, and are required to be OPERABLE in this MODE.*

In MODES 1, 2, and 3, the OPERABILITY requirements of the RCW/RSW System and UHS are specified in LCO 3.7.1.

in MODE 4 and MODE 5 ~~*except with the reactor cavity to dryer/separator storage pool gate removed and*~~ with ~~*water level ≥ 7.0 m*~~ water level < 7.0 m over the top of the reactor pressure vessel flange, the OPERABILITY requirements of the RCW/RSW System and UHS are specified in LCO 3.7.2, "RCW/RSW System and UHS – Shutdown."

ACTIONS

A. 1. and A. 2

If no RCW/RSW division is operable or the UHS is inoperable, or the associated ~~*divisional*~~ *UHS* ~~*[spray networks]*~~ cooling tower cells *are inoperable, then, immediately, those required feature(s) supported by the inoperable required RCW/RSW division or UHS must be declared inoperable (i.e., Emergency Diesel Generator, RHR heat exchanger) and the applicable Conditions and Required Actions of the appropriate LCOs for the inoperable required feature(s) must be entered. An inoperable RCW/RSW division or UHS requires entering the Conditions of LCO 3.8.2, "AC Sources – Refueling," for a diesel generator made inoperable and LCO 3.9.7, "Residual Heat Removal (RHR) – High Water Level" for RHR shutdown cooling made inoperable. This is in accordance with LCO 3.0.6 and ensures the proper actions are taken for these components.*

SURVEILLANCE REQUIREMENTS

SR 3.7.3.2

This SR verifies the water level in the UHS basin ~~*each RSW pump well of the intake structure*~~ *to be sufficient for the proper operation of the RSW pumps (net positive suction head and pump vortexing are considered in determining this limit). The 24 hour Frequency is based on operating experience related to trending of the parameter variations during the applicable MODES.*

SR 3.7.3.3

Verification of the RSW water temperature at the inlet to the RCW/RSW heat exchangers ensures that the heat removal capability of the RCW/RSW System is within the assumptions of the DBA analysis. The 24 hour Frequency is based on operating experience related to trending of the parameter variations during the applicable MODES.

STD DEP 16.3-16

SR 3.7.3.4

Operating each cooling tower cell fan for ≥ 15 minutes ensures that all fans are OPERABLE and that all associated controls are functioning properly. It also ensures that fan or motor failure, or excessive vibration can be detected for corrective action. The 31 day Frequency is based on operating experience, the known reliability of the fan units, the redundancy available, and the low probability of significant degradation of the cooling tower fans occurring between Surveillances.

SR 3.7.3.~~*4*~~5

Verifying the correct alignment for each manual, power operated, and automatic valve in each RCW/RSW and associated UHS ~~*[spray networks]*~~ cooling tower *division flow path provides assurance that the proper flow paths will exist for RCW/RSW operation. This SR does not apply to valves that are locked, sealed, or otherwise secured in position, since these valves were verified to be in the correct position prior to locking, sealing, or securing. A valve is also allowed to be in the nonaccident position and yet considered in the correct position, provided it can be automatically realigned to its accident position. This SR does not require any testing or valve manipulation; rather, it involves verification that those valves capable of potentially being mispositioned are in the correct position. This SR does not apply to valves that cannot be inadvertently misaligned, such as check valves.*

This SR is modified by a Note indicating that isolation of the RCW/RSW System to components or systems may render those components or systems inoperable, but does not affect the OPERABILITY of the RCW/RSW System. As such, when all RCW/RSW pumps, valves, and piping are OPERABLE, but a branch connection off the main header is isolated, the RCW/RSW System is still OPERABLE.

The 31 day Frequency is based on engineering judgement, is consistent with the procedural controls governing valve operation, and ensures correct valve positions.

SURVEILLANCE REQUIREMENTS (continued)

SR 3.7.3.~~5~~6

This SR verifies that the automatic isolation valves of the RCW/RSW System will automatically switch to the safety or emergency position to provide cooling water exclusively to the safety related equipment, and limited non-safety related equipment, during an accident event. This is demonstrated by use of an actual or simulated initiation signal. This SR also verifies the automatic start capability of the RCW/RSW pumps that are in standby and automatic valving in each of the standby RCW/RSW heat exchangers and associated UHS ~~[spray networks~~ cooling tower cell~~]~~ *in each division. ~~The LOGIC SYSTEM FUNCTIONAL TEST in SR 3.3.5.1.4~~* The COMPREHENSIVE FUNCTIONAL TESTs (SR 3.3.1.1.9 and SR 3.3.1.4.4) in LCO 3.3.1.1 and LCO 3.3.1.4 *overlap this SR to provide complete testing of the safety function.*

Operating experience has shown that these components usually pass the SR when performed on the 18 month Frequency. Therefore, this Frequency is concluded to be acceptable from a reliability standpoint.

B 3.7 PLANT SYSTEMS

B 3.7.4 Control Room Habitability Area (CRHA) – Emergency Filtration (EF) System

BASES

The information in this section of the reference ABWR DCD, including all subsections, is incorporated by reference with the following departures.

STD DEP 16.3-47
STD DEP 16.3-48

BACKGROUND
STD DEP 16.3-48

The Emergency Filtration System of the CRHA HVAC System, provides a radiologically controlled environment from which the unit can be safely operated following a Design Basis Accident (DBA).

The safety related function of the Emergency Filtration System used to control radiation exposure consists of two independent and redundant high efficiency air filtration divisions for treatment of a mixture of recirculated air and a minimum of outside air supplied for pressurization of the main control area envelope (MCAE). Each division consists of an electric heater, a prefilter, a high efficiency particulate air (HEPA) filter, an activated charcoal adsorber section, a second HEPA filter, ~~a fan~~ two 100% capacity fans*, and the associated ductwork and dampers. The electric heater limits the relative humidity of the influent air stream to less than 70% relative humidity. Prefilters and HEPA filters remove particulate matter that may be radioactive. The charcoal adsorbers provide a holdup period for gaseous iodine, allowing time for decay. The second HEPA filter collects any carbon fines exhausted from the adsorber.*

LCO

Two redundant divisions of the Emergency Filtration System are required to be OPERABLE to ensure that at least one is available, assuming a single failure disables the other division. Total system failure could result in exceeding a dose of 0.05 Sv to the control room operators in the event of a DBA.

The Emergency Filtration System is considered OPERABLE when the individual components necessary to control operator exposure are OPERABLE in both divisions. A division is considered OPERABLE when its associated:

a. Fan is OPERABLE (one of the two fans)*;*

b. HEPA filter and charcoal adsorber are not excessively restricting flow and are capable of performing their filtration functions; and

c. Heater, ductwork, valves, and dampers are OPERABLE, and air circulation can be maintained.

STD DEP 16.3-47

SURVEILLANCE REQUIREMENTS

SR 3.7.4.4

This SR verifies the integrity of the MCAE and the assumed inleakage rates of potentially contaminated air. The control room positive pressure, with respect to potentially contaminated adjacent spaces, is periodically tested to verify proper function of the Emergency Filtration System. During the emergency mode of operation, the Emergency Filtration System is designed to slightly pressurize the control room to ≥ 3.2 mm water gauge positive pressure with respect to the atmosphere to prevent unfiltered inleakage. The Emergency Filtration System is designed to maintain this positive pressure at a flow rate of ≤ ~~360~~3400 m^3/h @ 0.101 MPa, 0°C to the MCAE in the emergency filtration mode. The Frequency of 18 months on a STAGGERED TEST BASIS is consistent with industry practice and other filtration system SRs.

B 3.7 PLANT SYSTEMS

B 3.7.5 Control Room Habitability Area (CRHA) – Air Conditioning (AC) System

BASES

The information in this section of the reference ABWR DCD, including all subsections, is incorporated by reference with the following departure.

STD DEP 16.3-76

SURVEILLANCE REQUIREMENTS

SR 3.7.5.2

This SR verifies that each CRHA AC division starts and operates on a low flow signal from the operating Emergency Filtration Unit. The LOGIC SYSTEM FUNCTIONAL TEST in SR 3.3.7.1.4 overlaps this SR to provide complete testing of the safety function. The 18 month Frequency is appropriate since significant degradation of the CRHA AC System is not expected over this time period.

[This page intentionally left blank]

B 3.7 PLANT SYSTEMS

B 3.7.6 Main Condenser Offgas

BASES

The information in this section of the reference ABWR DCD, including all subsections, is incorporated by reference with the following departure.

STD DEP 16.3-75

BACKGROUND

During unit operation, steam from the low pressure turbine is exhausted directly into the condenser. Air and noncondensible gases are collected in the condenser, then exhausted through the steam jet air ejectors (SJAEs) to the Main Condenser Offgas System. The offgas from the main condenser normally includes radioactive gases.

The Main Condenser Offgas System has been incorporated into the unit design to reduce the gaseous radwaste emission. This system uses a catalytic recombiner to recombine radiolytically dissociated hydrogen and oxygen. The gaseous mixture is cooled by the offgas condenser; the water and condensibles are stripped out by the offgas condenser and moisture separator. The radioactivity of the remaining gaseous mixture (i.e., the offgas recombiner effluent) is monitored downstream of the moisture separator prior to entering the ~~holdup line~~ charcoal adsorber vault*.*

[This page intentionally left blank]

B 3.7 PLANT SYSTEMS

B 3.7.7 Main Turbine Bypass System

BASES

The information in this section of the reference ABWR DCD, including all subsections, is incorporated by reference with the following site-specific supplement. The site specific supplement partially addresses COL License Information Item 16.1.

SURVEILLANCE REQUIREMENTS

SR 3.7.7.3

This SR ensures that the TURBINE BYPASS SYSTEM RESPONSE TIME is in compliance with the assumptions of the appropriate safety analysis. The response time limits are specified in ~~[unit specific~~ FSAR Section 1.1.3~~]~~. The 18 month Frequency is based on the need to perform this Surveillance under the conditions that apply during a unit outage and because of the potential for an unplanned transient if the Surveillance were performed with the reactor at power. Operating experience has shown the 18 month Frequency, which i s based on the refueling cycle, is acceptable from a reliability standpoint and is also based on a reliability analysis in Reference 3.

REFERENCES

1. *DCD Tier 2, Section 7.7.1.8.*

2. *DCD Tier 2, Chapter 15.*

3. *Letter, Jack Fox to Chet Poslusny, "Submittal Supporting Accelerated ABWR Review Schedule-Revised LC0 3.7.5", Docket No. STN 52-001, May 19, 1993.*

[This page intentionally left blank]

B 3.7 PLANT SYSTEMS

B 3.7.8 Fuel Pool Water Level

BASES

The information in this section of the reference ABWR DCD, including all subsections, is incorporated by reference with no departures or supplements.

[This page intentionally left blank]

B 3.8 ELECTRICAL POWER SYSTEMS

B 3.8.1 AC Sources – Operating

BASES

The information in this section of the reference ABWR DCD, including all subsections, is incorporated by reference with the following departures.

STD DEP 8.3-1 (All)

STD DEP 16.3-80

BACKGROUND

The Class 1E AC distribution system supplies electrical power to three divisional load groups, with each division powered by an independent Class 1E ~~6.9~~4.16 kV ESF bus (refer to LCO 3.8.9, "Distribution Systems – Operating"). Each ESF bus has two separate and independent preferred (offsite) sources of power and a dedicated onsite DG. Each ESF bus is also connectable to a combustion turbine generator (CTG). The ESF systems of any two of the three divisions provide for the minimum safety functions necessary to shut down the unit and maintain it in a safe shutdown condition.

Offsite power is supplied to each of the ~~6.9~~4.16 kV ESF buses from the transmission network via two electrically and physically separated circuits. In addition, the CTG may be substituted for the second (delay access) offsite source to any one ESF bus (for a limited duration) when the first (immediate access) offsite source to the ESF bus is from ~~the~~ a reserve auxiliary transformer while the unit auxiliary transformer associated with the ESF bus is out of service. The CTG may also be substituted for the second (delay access) offsite source for the three ESF buses (for a limited duration) when the first (immediate access) offsite source to each of the ESF buses is from its associated unit auxiliary transformer while the reserve auxiliary transformers (associated with the three ESF buses) ~~is~~ are out of service. These offsite AC electrical power circuits are designed and located so as to minimize to the extent practicable the likelihood of their simultaneous failure under operating and postulated accident and environmental conditions. A detailed description of the offsite power system and circuits to the onsite Class 1E ESF buses is found in DCD Tier 2, Chapter 8 (Ref. 2).

The onsite standby power source for each ~~6.9~~4.16 kV ESF bus is a dedicated DG. A DG starts automatically on loss of coolant accident (LOCA) signal (i.e., signal generated from low reactor water level and high drywell pressure that are arranged in two-out-of four logic combinations) or on an ESF bus undervoltage signal (refer to LCO 3.3.1.4, "ESF Actuation Instrumentation"). In addition, power can be supplied to any one ESF from the CTG (for a limited duration) when a DG is inoperable.

Ratings for DGs satisfy the requirements of Regulatory Guide 1.9 (Ref. 3). The continuous service rating for each DG is ~~5000~~7200 kW @ 0.8 power

factor, with 10% overload permissible for up to 2 hours in any 24 hour period.

APPLICABLE SAFETY ANALYSES, LCO AND APPLICABILITY

AC sources satisfy the requirements of Criterion 3 of the NRC Policy Statement. In addition, the CTG may be substituted for the second (delay access) offsite source to any one ESF bus when the first (immediate access) offsite source is from ~~the~~ a reserve auxiliary transformer while the unit auxiliary transformer associated with the ESF bus is out of service. The CTG may also be substituted for the second (delay access) offsite source for the three ESF buses (for a limited duration) when the first (immediate access) offsite source to each of the ESF buses is from its associated unit auxiliary transformers while the reserve auxiliary transformers (associated with the three ESF buses) ~~is~~ are out of service. The CTG may also be used to substitute (for a limited time) for an inoperable DG. With this substitution, the AC electrical power sources are designed to provide sufficient capacity, capability, redundancy, and reliability to ensure the availability of necessary power to ESF systems so that the fuel, Reactor Coolant System (RCS), and containment design limits are not exceeded.

LCO

Two qualified offsite circuits between the offsite transmission network and the onsite Class 1E Distribution System that consists of three separate and independent divisions (Divisions I, II, and III) each backed by its own dedicated and independent DG, ensure availability of the required power to shut down the reactor and maintain it in a safe shutdown condition after an anticipated operational occurrence (AOO) or a postulated DBA. In addition, the CTG may be utilized as a temporary substitution for the second (delayed access) qualified offsite circuit when the first (immediate access) qualified offsite circuit to any one ESF bus (immediate access) offsite source is from ~~the~~ a reserve auxiliary transformer while the unit auxiliary transformer associated with the ESF bus is out of service. With this temporary substitution, the two qualified offsite circuits between the offsite transmission network and the onsite Class 1E Distribution System that consists of three separate and independent divisions (Divisions I, II, and III) each backed by its own dedicated and independent DG, also ensure availability of the required power to shutdown the reactor and maintain it in a safe condition after an anticipated operational occurrence (AOO) or a postulated DBA.

Each offsite circuit must be capable of maintaining rated frequency and voltage, and accepting required loads within the assumed load sequence intervals during an accident, while connected to the ESF buses. The normal preferred circuit consists of the switching station breaker to the main transformer, the generator breaker, the disconnect links to the unit auxiliary transformers, and the circuit path from the offsite transmission network to all of the ~~6.9~~4.16 kV ESF buses including feeder breakers at the ~~6.9~~4.16 kV ESF buses. The alternate preferred circuit consists of the switching station breakers to the reserve auxiliary transformers and the circuit path from the offsite transmission network to all of the ~~6.9~~4.16 kV ESF buses including feeder breakers at the ~~6.9~~4.16 kV ESF buses.

The CTG, when used as a temporary substitute for the second offsite source or for an inoperable DG to any one ESF bus, must be capable of starting, accelerating to required speed and voltage, and of being manually

configured to provide power to the ESF bus. This sequence must be accomplished ~~within 2~~ in less than 10 *minutes. The CTG must also be capable of accepting required loads, must be capable of maintaining rated frequency and voltage, and accepting required loads when connected to the ESF bus.* The 10-minute starting time takes into account the capacity and capability of the remaining AC sources, reasonable time for startup of the CTG, and the low probability of a DBA occurring during this period.

ACTIONS

A.1, A.2, A.3, and A.4

If Condition A is entered, Required Action A.4 allows 30 days to restore the inoperable offsite power source to one ESF bus to OPERABLE status provided:

a. The ESF bus with ~~its associated unit auxiliary transformer~~ one of its offsite power sources *inoperable is verified to be energized from the offsite transmission network through ~~the reserve auxiliary transformer~~* its other offsite power source *initially within 72 hours, and once per 8 hours thereafter,*

B.3, B.4, and B.5

*Should the CTG no longer be functional or capable of being aligned to a ~~6.9~~*4.16 *kV AC ESF bus subsequent to the 72-hour period following initial entry into Condition B, Condition G again applies and Required Actions G.1 and G.2 must be followed. Anytime the 8-hour Completion Time of Required Action B.4 is not met during this extension period, Condition G must be entered. Condition G can then only be exited by restoring the offsite circuit to OPERABLE status.*

The CTG is considered functional when the requirements of DCD Tier 2, Section 9.5.13.19 are satisfied and the CTG is verified to start and achieves steady state voltage ≥ [~~6210~~ 12.42*] kV and ≤ [~~7590~~* 15.18*] kV, and frequency ≥ [58.8] Hz and ≤ [61.2] Hz ~~within 2~~* in less than 10 *minutes.*

C.4, C.5, and C.6

The CTG is considered functional when the requirements of DCD Tier 2, Section 9.5.13.19 are satisfied and the CTG is verified to start from standby conditions and achieves steady state voltage ≥ [~~6210~~ 12.42*] kV and ≤ [~~7590~~* 15.18*] kV, and frequency ≥ [58.8] Hz and ≤ [61.2] Hz ~~within 2~~* in less than 10 *minutes.*

STD DEP 16.3-80

The 15-day Completion Time provides a limit on the time allowed in a specified condition after discovery of failure to meet the LCO. This limit is considered reasonable for situations in which Conditions B and C are entered ~~D.1 and D.2~~ concurrently. The "AND" connector between the 14-day and 15-day Completion Times means that both Completion Times apply simultaneously, and the more restrictive must be met.

ACTIONS (continued)

As in Required Action C.2, the 15-day Completion Time of Required Action C.5 allows for an exception to the normal "time zero" for beginning the allowed outage time "clock." This exception results in establishing the "time zero" at the time the LCO was initially not met, instead of the time Condition C was entered.

D.1 and D.2

Required Action D.1 addresses actions to be taken in the event of concurrent failure of redundant required features. Required Action D.1 reduces the vulnerability to a loss of function. The Completion Time for taking these actions is reduced to 12 hours from that allowed with only one division without offsite power (Required Action B.2).

E.1 and E.2

The CTG is considered functional when the requirements of DCD Tier 2, Section 9.5.13.19 are satisfied and the CTG is verified to start from standby conditions and achieves steady state voltage ≥ ~~[6210~~ 12.42~~]~~ kV and ≤ ~~[7590~~ 15.18~~]~~ kV, and frequency ≥ ~~[58.8]~~ Hz and ≤ ~~[61.2]~~ Hz ~~within 2~~ in less than 10 minutes.

The once-per-8-hour Completion Time of Required Action E.2 is necessary to keep a check on the proper alignment of the CTG's circuit breakers and thus the capability of supplying power from the CTG to the ~~6.9 kV essential AC~~ 4.16 kV ESF bus associated with the inoperable DG.

F.1

If Condition F is entered, Required Action F.3 allows 72 hours to restore one DG to OPERABLE status provided the CTG is verified functional through testing within 2 hours, and its circuit breakers are aligned to one affected ~~6.9~~4.16 kV ESF bus associated with an inoperable DG and capable of being aligned to the other ~~6.9~~4.16 kV ESF bus associated with an inoperable DG, initially within 2 hours and verified once per 8 hours thereafter. This 2 hour Completion Time is reasonable because of the reliability and convenience of the CTG, the capability of the remaining AC sources, reasonable time for repairs, and the low probability of a DBA occurring during this time period.

The CTG is considered functional when the requirements of DCD Tier 2, Section 9.5.13.19 are satisfied and the CTG is verified to start from standby conditions and achieves steady state voltage ≥ ~~[6210~~ 12.42~~]~~ kV and ≤ ~~[7590~~ 15.18~~]~~ kV, and frequency ≥ ~~[58.8]~~ Hz and ≤ ~~[61.2]~~ Hz ~~within 2~~ in less than 10 minutes.

SURVEILLANCE REQUIREMENTS

Where the SRs discussed herein specify voltage and frequency tolerances, the following summary is applicable. The minimum steady state output voltage of ~~6210~~ 3744 V is 90% of the nominal ~~6.9~~ 4.16 kV output voltage. This value, which is specified in ANSI C84.1 (Ref. 10), allows for voltage drop to the terminals of ~~6600~~ 4000 V motors whose minimum operating voltage is specified as 90%, or ~~5980~~ 3600 V. It also allows for voltage drops to motors and other equipment down through the ~~200~~ 120 V level where minimum operating voltage is also usually specified as 90% of name plate rating. The specified maximum steady state output voltage of ~~7590~~ 4576 V is equal to the maximum operating voltage specified for ~~6600~~ 4000 V motors plus voltage drop from the source to the loads. It ensures that for a lightly loaded distribution system, the voltage at the terminals of ~~6600~~ 4000 V motors is no more than the maximum rated operating voltages. The specified minimum and maximum frequencies of the DG are 58.8 Hz and 61.2 Hz, respectively. These values are equal to ± 2% of the 60 Hz nominal frequency and are derived from the recommendations given in Regulatory Guide 1.9 (Ref. 3).

SR 3.8.1.8

Manual transfer of each ~~6.9~~ 4.16 kV ESF bus power supply from the normal offsite circuit to the alternate offsite circuit demonstrates the OPERABILITY of the alternate circuit distribution network to power the shutdown loads. The manual transfer should be performed using the DG to carry the loads (i.e., not a dead bus transfer). The 18 month Frequency of the Surveillance is based on engineering judgment taking into consideration the plant conditions required to perform the Surveillance, and is intended to be consistent with expected fuel cycle lengths. Operating experience has shown that these components usually pass the SR when performed on the 18 month Frequency. Therefore, the Frequency was concluded to be acceptable from a reliability standpoint.

SR 3.8.1.9

Each DG is provided with an engine overspeed trip to prevent damage to the engine. Recovery from the transient caused by the loss of a large load could cause diesel engine overspeed, which, if excessive, might result in a trip of the engine. This Surveillance demonstrates the DG load response characteristics and capability to reject the largest single load without exceeding predetermined voltage and frequency and while maintaining a specified margin to the overspeed trip. The load referenced for Division II and Division III DGs is the ~~1400~~ 1689 kW high pressure core flooder (HPCF) pump; for the Division I DG, the ~~540~~ 589 kW residual heat removal (RHR) pump. The ~~Reactor Building Cooling Water (RCW)~~ Reactor Service Water (RSW) system load was not used. Even though the load to DG I is ~~640~~ 1060 kW, that value consists of 2 ~~RCW~~ RSW pumps of ~~320~~ 530 kW each. As required by IEEE-308 (Ref. 12), the load rejection test is acceptable if the increase in diesel speed does not exceed 75% of the difference between synchronous speed and the overspeed trip setpoint, or 15% above synchronous speed, whichever is lower.

SURVEILLANCE REQUIREMENTS (Continued)

~~*Reviewer's Note: The above MODE restrictions may be deleted if it can be demonstrated to the staff, on a plant specific basis, that performing the SR with the reactor in any of the restricted MODES can satisfy the following criteria, as applicable:*~~

~~*a. Performance of the SR will not render any safety system or component inoperable;*~~

~~*b. Performance of the SR will not cause perturbations to any of the electrical distribution systems that could result in a challenge to steady state operation or to plant safety systems; and*~~

~~*c. Performance of the SR, or failure of the SR, will not cause, or result in, an A00 with attendant challenge to plant safety systems.*~~

SR 3.8.1.10

~~*Reviewer's Note: The above MODE restrictions may be deleted if it can be demonstrated to the staff, on a plant specific basis, that performing the SR with the reactor in any of the restricted MODES can satisfy the following criteria, as applicable:*~~

~~*a. Performance of the SR will not render any safety system or component inoperable;*~~

~~*b. Performance of the SR will not cause perturbations to any of the electrical distribution systems that could result in a challenge to steady state operation or to plant safety systems; and*~~

~~*c. Performance of the SR, or failure of the SR, will not cause, or result in , an A00 with attendant challenge to plant safety systems.*~~

SURVEILLANCE REQUIREMENTS (Continued)

SR 3.8.1.13

~~*Reviewer's Note: The above MODE restrictions may be deleted if it can be demonstrated to the staff, on a plant specific basis, that performing the SR with the reactor in any of the restricted MODES can satisfy the following criteria, as applicable*~~

~~*a. Performance of the SR will not render any safety system or component inoperable;*~~

~~*b. Performance of the SR will not cause perturbations to any of the electrical distribution systems that could result in a challenge to steady state operation or to plant safety systems; and*~~

~~*c. Performance of the SR, or failure of the SR, will not cause, or result in, an A00 with attendant challenge to plant safety systems.*~~

SR 3.8.1.18

~~*Reviewer's Note: The above MODE restrictions may be deleted if it can be demonstrated to the staff, on a plant specific basis, that performing the SR with the reactor in any of the restricted MODES can satisfy the following criteria, as applicable*~~

~~*a. Performance of the SR will not render any safety system or component inoperable;*~~

~~*b. Performance of the SR will not cause perturbations to any of the electrical distribution systems that could result in a challenge to steady state operation or to plant safety systems; and*~~

~~*c. Performance of the SR, or failure of the SR, will not cause, or result in, an AOO with attendant challenge to plant safety systems.*~~

[This page intentionally left blank]

B 3.8 ELECTRICAL POWER SYSTEMS

B 3.8.2 AC Sources – Refueling

BASES

The information in this section of the reference ABWR DCD, including all subsections, is incorporated by reference with the following departures.

STD DEP 8.3-1
STD DEP 16.3-40

LCO (continued)

The qualified offsite circuit must be capable of maintaining rated frequency and voltage while connected to ESF bus(es), and of accepting required loads during an accident. The qualified offsite circuit is either the normal or alternate preferred power circuits to AC Electric Power Distribution System that are described in DCD Tier 2, Chapter 8 and are part of the licensing basis for the plant. The normal preferred circuit consists of the switching stations breaker to the main transformers, the generator breaker, the disconnect links to the unit auxiliary transformers, and the circuit path from the offsite transmission network to all of the ~~6.9~~ 4.16 kV ESF buses required by LC0 3.8.10 including feeder breakers at the ~~6.9~~ 4.16 kV ESF buses. The alternate preferred circuit consists of the switching station breakers to the reserve transformers and the circuit path from the offsite transmission network to all of the ~~6.9~~ 4.16 kV ESF buses required by LC0 3.8.10 including feeder breakers at the ~~6.9~~ 4.16 kV ESF buses.

STD DEP 8.3-1

STD DEP 16.3-40

Each required DG must be capable of starting, accelerating to required speed and voltage, and connecting to its respective ESF bus on detection of bus undervoltage, and accepting required loads. This sequence must be accomplished within 20 seconds. Each DG must also be capable of accepting required loads within the assumed loading sequence intervals, and must continue to operate until offsite power can be restored to the ESF buses. These capabilities are required to be met from a variety of initial conditions such as: DG in standby with the engine hot, DG in standby with engine at ambient conditions, and DG operating in *parallel test mode.*

[This page intentionally left blank]

B 3.8 ELECTRICAL POWER SYSTEMS

B 3.8.3 Diesel Fuel Oil, Lube Oil, and Starting Air Subsystem

BASES

The information in this section of the reference ABWR DCD, including all subsections, is incorporated by reference with the following departure and supplements. The site-specific supplements partially address COL License Information Item 16.1.

STD DEP 16.3-51

BACKGROUND

Each DG has ~~an~~ redundant *air start* sub*systems*, each *with adequate capacity for five successive start attempts on the DG without recharging the air start receiver(s).* One subsystem with an OPERABLE air start receiver satisfies OPERABILITY requirements for its associated DG.

LCO

The starting air system is required to have a minimum capacity for five successive DG start attempts without recharging the air start receivers. One subsystem with an OPERABLE air start receiver satisfies OPERABILITY requirements for its associated DG.

ACTIONS

B.1

With lube oil inventory < [7,300] liters, sufficient lube oil to support 7 days of continuous DG operation at full load conditions may not be available. However, the Condition is restricted to lube oil volume reductions that maintain at least a 6 day supply. This restriction allows sufficient time for obtaining the requisite replacement volume. A period of 48 hours is considered sufficient to complete restoration of the required volume prior to declaring the DG inoperable. This period is acceptable based on the remaining capacity (> 6 days), the low rate of usage, the fact that procedures will be initiated to obtain replenishment, and the low probability of an event during this brief period.

E.1

With starting air receiver pressure < [3,000] kPaG, sufficient capacity for five successive DG start attempts does not exist. However, as long as the receiver pressure is > [2,700] kPaG, there is adequate capacity for at least one start attempt, and the DG can be considered OPERABLE while the air receiver pressure is restored to the required limit. A period of 48 hours is considered sufficient to complete restoration to the required pressure prior to declaring the DG inoperable. This period is acceptable based on the remaining air start capacity, the fact that most DG starts are accomplished on the first attempt, and the low probability of an event during this brief period.

SURVEILLANCE REQUIREMENTS

SR 3.8.3.2

This Surveillance ensures that sufficient lube oil inventory is available to support at least 7 days of full load operation for each DG. The [7,300] liter requirement is based on the DG manufacturer's consumption values for the run time of the DG. Implicit in this SR is the requirement to verify the capability to transfer the lube oil from its storage location to the DG when the DG lube oil sump does not hold adequate inventory for 7 days of full load operation without the level reaching the manufacturer's recommended minimum level.

A 31 day Frequency is adequate to ensure that a sufficient lube oil supply is onsite, since DG starts and run times are closely monitored by the plant staff.

SR 3.8.3.3

The tests listed below are a means of determining whether new fuel oil is of the appropriate grade and has not been contaminated with substances that would have an immediate detrimental impact on diesel engine combustion and operation. If results from these tests are within acceptable limits, the fuel oil may be added to the storage tanks without concern for contaminating the entire volume of fuel oil in the storage tanks. These tests are to be conducted prior to adding the new fuel to the storage tank(s), but in no case is the time between receipt of new fuel and conducting the tests to exceed 31 days. The tests, limits, and applicable ASTM Standards are as follows:

a. Sample the new fuel oil in accordance with ASTM D4057-[06] (Ref. 6);

b. Verify in accordance with the tests specified in ASTM D975-[09] (Ref. 6) that the sample has an absolute specific gravity at [15.6/15.6°C of ≥ 0.83° and ≤ 0.89° (or an API gravity at 15.6°C of ≥ 27° and ≤ 39°), a kinematic viscosity at 40°C of ≥ 1.9 mm^2/s and ≤ 4.1 mm^2/s, and a flash point of ≥ 51.7°C]; and

c. Verify that the new fuel oil has a clear and bright appearance with proper color when tested in accordance with ASTM D4176-[04e1] (Ref. 6).

SURVEILLANCE REQUIREMENTS (continued)

SR 3.8.3.3 (continued)

Failure to meet any of the above limits is cause for rejecting the new fuel oil, but does not represent a failure to meet the LCO since the fuel oil is not added to the storage tanks.

Within 31 days following the initial new fuel oil sample, the fuel oil is analyzed to establish that the other properties specified in Table 1 of ASTM D975-[09] (Ref. 6) are met for new fuel oil when tested in accordance with ASTM D975-[09] (Ref. 6), except that the analysis for sulfur may be performed in accordance with ASTM D1552-[08] (Ref. 6) or ASTM D2622-[08] (Ref. 6). The 31 day period is acceptable because the fuel oil properties of interest, even if not within stated limits, would not have an immediate effect on DG operation. This Surveillance ensures the availability of high quality fuel oil for the DGs.

Fuel oil degradation during long term storage shows up as an increase in particulate, mostly due to oxidation. The presence of particulate does not mean that the fuel oil will not burn properly in a diesel engine. However, the particulate can cause fouling of filters and fuel oil injection equipment, which can cause engine failure.

Particulate concentrations should be determined in accordance with ASTM D2276-[06], Method A (Ref. 6). This method involves a gravimetric determination of total particulate concentration in the fuel oil and has a limit of 10 milligrams/liter. It is acceptable to obtain a field sample for subsequent laboratory testing in lieu of field testing.

The Frequency of this Surveillance takes into consideration fuel oil degradation trends indicating that particulate concentration is unlikely to change between Frequency intervals.

REFERENCES

6. ASTM Standards: D4057-[06]; D975-[09]; D4176-[04e1]; D1552-[08]; D2622-[08]; D2276-[06].

[This page intentionally left blank]

B 3.8 ELECTRICAL POWER SYSTEMS

B 3.8.4 DC Sources – Operating

BASES

The information in this section of the reference ABWR DCD, including all subsections, is incorporated by reference with the following departures.

STD DEP T1 3.4-1
STD DEP 8.3-1
STD DEP 16.3-42

STD DEP 8.3-1

LCO

The four DC electrical power subsystems are required to be OPERABLE to ensure the availability of the required power to shut down the reactor and maintain it in a safe condition after an anticipated operational occurrence (AOO) or a postulated DBA. Loss of any DC electrical power subsystem does not prevent the minimum safety function from being performed (Ref. 4). Each subsystem (or Division) consists of one battery, one battery charger, and the corresponding control equipment and interconnecting cabling within the subsystem.

The CTG, when used as a temporary substitute for a DC electrical power subsystem, must be capable of starting, accelerating to required speed and voltage, and of being manually configured to provide power to the ESF bus. This sequence must be accomplished in less than 10 minutes. The CTG must also be capable of accepting required loads and maintaining rated frequency and voltage when connected to the ESF bus. The 10-minute starting time takes into account the capacity and capability of the remaining AC sources, reasonable time for startup of the CTG, and the low probability of a DBA occurring during this period.

STD DEP T1 3.4-1

ACTIONS

B.1 and B.2

In Condition B, Division IV DC electrical power subsystem is inoperable. Required Actions B.1 allows 2 hours to declare affected required features inoperable so that appropriate actions are implemented in accordance with the affected required features of the LCOs' ACTIONS. Division IV is less critical than the other three DC electrical power subsystems because of its limited role in actuating safety related functions (i.e., ~~Essential Multiplex System~~ Data Communication Function *Div. IV, SSLC Div. IV sensor logic). Division IV does not feed or control any major mechanical components or systems.*

ST DEP 16.3-42 *D.1 and D.2*

~~*If all inoperable DC electrical power subsystems cannot be restored to OPERABLE status within the associated Completion Times for Required Actions A.1, B.2, and C.1 or C.2, the unit must be brought to a MODE in which the LCO does not apply.*~~ The unit must be brought to a MODE in which the LCO does not apply if any Required Action of Condition A or B is not met within its associated Completion Time, or if Condition C is not met within its associated Completion Time, while a DC electrical power subsystem remains inoperable. *To achieve this status, the plant must be brought to at least MODE 3 within 12 hours and to MODE 4 within 36 hours. The allowed Completion Times are reasonable, based on operating experience, to reach the required plant conditions from full power conditions in an orderly manner and without challenging plant systems. The Completion Time to bring the unit to MODE 4 is consistent with the time required in Regulatory Guide 1.93 (Ref. 7).*

B 3.8 ELECTRICAL POWER SYSTEMS

B 3.8.5 DC Sources – Shutdown

BASES

The information in this section of the reference ABWR DCD, including all subsections, is incorporated by reference with no departures or supplements.

[This page intentionally left blank]

B 3.8 ELECTRICAL POWER SYSTEMS

B 3.8.6 Battery Cell Parameters

BASES

The information in this section of the reference ABWR DCD, including all subsections, is incorporated by reference with the following site-specific supplements. The site-specific supplements partially address COL License Information Item 16.1.

SURVEILLANCE REQUIREMENTS

SR 3.8.6.2

The quarterly inspection of specific gravity and voltage is consistent with IEEE-450 (Ref. 3). In addition, within 24 hours of a battery discharge < [110] V or a battery overcharge > [140] V, the battery must be demonstrated to meet Category B limits. This inspection is also consistent with IEEE-450 (Ref. 3), which recommends special inspections following a severe discharge or overcharge, to ensure that no significant degradation of the battery has occurred as a consequence of such discharge or overcharge.

Table 3.8.6-1

The Category A limit specified for specific gravity for each pilot cell is ≥ [1.195] (0.015 below the manufacturer's fully charged nominal specific gravity or a battery charging current that had stabilized at a low value). This value is characteristic of a charged cell with adequate capacity. According to IEEE-450 (Ref. 3), the specific gravity readings are based on a temperature of 25°C.

Because of specific gravity gradients that are produced within cells during the recharging process, delays of several days may occur while waiting for the specific gravity to stabilize. A stabilized charger current is an acceptable alternative to specific gravity measurement for determining the state of charge of the battery. This phenomenon is discussed in IEEE-450 (Ref. 3). Footnote c to Table 3.8.6-1 allows the float charge current to be used as an alternate to specific gravity for up to [7] days following a battery recharge.

Category B defines the normal parameter limits for each connected cell. The term "connected cell" excludes any battery cell that may be jumpered out.

The Category B limits specified for electrolyte level and float voltage are the same as those specified for Category A and have been discussed above. The Category B limit specified for specific gravity for each connected cell is ≥ [1.190] (0.020 below the manufacturer's fully charged, nominal specific gravity) with the average of all connected cells > [1.200] (0.010 below the manufacturer's fully charged, nominal specific gravity). These are based on manufacturer's recommendations. The minimum specific gravity value required for each cell ensures that the effects of a highly charged or newly installed

SURVEILLANCE REQUIREMENTS (continued)

cell do not mask overall degradation of the battery. Footnote b to Table 3.8.6-1 requires correction of specific gravity for electrolyte temperature and level.

Category C defines the limits for each connected cell. These values, although reduced, provide assurance that sufficient capacity exists to perform the intended function and maintain a margin of safety. When any battery parameter is outside the Category C limit, the assurance of sufficient capacity described above no longer exists, and the battery must be declared inoperable.

The Category C limit specified for electrolyte level (above the top of the plates and not overflowing) ensure that the plates suffer no physical damage and maintain adequate electron transfer capability. The Category C limit for float voltage is based on IEEE-450 (Ref. 3), which states that a cell voltage of 2.07 V or below, under float conditions and not caused by elevated temperature of the cell, indicates internal cell problems and may require cell replacement.

The Category C limit for average specific gravity (≥ [1.190]), is based on manufacturer's recommendations (0.020 below the manufacturer's recommended fully charged, nominal specific gravity). In addition to that limit, it is required that the specific gravity for each connected cell must be no less than 0.020 below the average of all connected cells. This limit ensures that the effect of a highly charged or new cell does not mask overall degradation of the battery. The footnotes to Table 3.8.6-1 that apply to specific gravity are applicable to Category A, B, and C specific gravity.

B 3.8 ELECTRICAL POWER SYSTEMS

B 3.8.7 Inverters – Operating

BASES

The information in this section of the reference ABWR DCD, including all subsections, is incorporated by reference with the following departure.

STD DEP 8.3-1

LCO (continued)

Maintaining the required inverters OPERABLE ensures that the redundancy incorporated into the design of the RPS, MSIV logic and controls, NMS, and PRM is maintained. Each of the four inverters has a 125 V battery backup power source to ensure an uninterruptible supply of AC electrical power to the AC vital buses even if the ~~6.9~~ 4.16 kV and 480 V safety buses are de-energized.

[This page intentionally left blank]

B 3.8 ELECTRICAL POWER SYSTEMS

B 3.8.8 Inverters – Shutdown

BASES

The information in this section of the reference ABWR DCD, including all subsections, is incorporated by reference with the following departures.

STD DEP 8.3-1
STD DEP 16.3-52

APPLICABLE SAFETY ANALYSES STD DEP 16.3-52	*The initial conditions of Design Basis Accident (DBA) and transient accident analyses in DCD Tier 2, Chapter 6 (Ref. 1) and Chapter 15 (Ref. 2), assume Engineered Safety Feature systems are OPERABLE. The inverters are designed to provide the required capacity, capability, redundancy, and reliability to ensure the availability of necessary power to the ~~Reactor Protection System (RPS) and Emergency Core Cooling Systems (ECCS) instrumentation and controls~~* Class 1E CVCF *loads so that the fuel, Reactor Coolant System, and containment design limits are not exceeded.*
LCO	*The inverters ensure the availability of AC electrical power for the ~~RPS and ECCS instrumentation and controls~~* Class 1E CVCF loads *required to shut down the reactor and maintain it in a safe condition after an anticipated operational occurrence or postulated DBA.*
STD DEP 8.3-1	*Maintaining the required inverter(s) OPERABLE ensures the availability of sufficient inverter power sources to operate the plant in a safe manner and to mitigate the consequences of postulated events during shutdown (e.g., fuel handling accidents and inadvertent reactor vessel drain down). Each inverter has a 125 V battery backup power source to ensure an uninterruptible supply of AC electrical power to the AC vital buses even if the ~~9.6~~* 4.16 *kV safety buses are de-energized.*

[This page intentionally left blank]

B 3.8 ELECTRICAL POWER SYSTEMS

B 3.8.9 Distribution Systems – Operating

BASES

The information in this section of the reference ABWR DCD, including all subsections, is incorporated by reference with the following departures.

STP DEP T1 2.12-2 (Table B 3.8.9-1)
STD DEP 8.3-1 (All)
STD DEP 8.3-3 (Table B 3.8.9-1)

BACKGROUND

The primary AC distribution system consists of each ~~6.9~~ 4.16 kV Engineered Safety Feature (ESF) bus that has two separate and independent offsite sources of power, as well as a dedicated onsite diesel generator (DG) source. Each ~~6.9~~ 4.16 kV ESF bus is normally connected to a preferred source. If all offsite sources are unavailable, the onsite emergency DGs supply power to the ~~6.9~~ 4.16 kV ESF buses. Control power for the ~~6.9~~ 4.16 kV breakers is supplied from the Class 1E batteries. Additional description of this system may be found in the Bases for LCO 3.8.1, "AC Sources – Operating," and the Bases for LCO 3.8.4, "DC Sources – Operating."

The secondary plant AC distribution system includes 480 V ESF load centers and associated loads, motor control centers, and transformers. Each 480 V AC MCC is powered from its divisional ~~6.9~~ 4.16 kV ESF Bus via a ~~6.9~~ 4.16 kV/480 V transformer.

The 120 V AC vital buses A10, B10, C10, and D10 (Divisions I, II, III, and IV respectively) are arranged in four load groups and are normally powered from a divisional 480 V AC motor control center (MCC) via a rectifier, an inverter, and a static switch. Divisions I, II, and III are normally powered from Division I, II, and III 480 V AC MCCs, respectively. Division IV is normally powered from a Division II 480 V AC MCC since there is no fourth division of 480 V AC. However, each of the four DC electrical power distribution subsystems (including Division IV) is backed up by its own battery bank and will automatically supply power (via the inverter) in the event of low voltage output from the rectifier (which would occur, for example, if the 480 V AC divisional power is lost). The Bases for LCO 3.8.7, "Inverters – Operating," describe the use of the four DC subsystems. In the event of an inoperable inverter, an alternate power supply for each 120 V AC vital bus is a divisional Class 1E 480 V/120 V bypass transformer powered from its divisional 480 V AC MCC; again, with no fourth division of 480 V AC, the alternate power supply to the Division IV 120 V AC bus is a Division II 480 V AC MCC.

The RPS/MSIV logic and control in each of the four divisions use redundant power supplies, AC vital and AC instrument power. The 120 V AC instrumentation power buses A10/A20, B10/B20, C10/C20, and D10/D20 (Divisions I, II, III, and IV respectively) are arranged in four

load groups and are normally powered from a divisional 480 VAC motor control center (MCC) via a divisional Class 1E 480 V/120 V transformer powered from its divisional 480 V AC MCC; again, with no fourth division of 480 V AC, the alternate power supply to the Division IV 120 V AC bus is a Division II 480 V AC MCC.

LCO

OPERABLE AC, DC, and AC vital bus electrical power distribution subsystems require the associated buses (listed in Table B 3.8.9-1) to be energized to their proper voltages. With the exception of a special set of manual interlocks through the spare battery chargers, there are no tie breakers between redundant safety related AC, DC, and AC vital bus power distribution subsystems. This prevents any electrical malfunction in any power distribution subsystem from propagating to a redundant subsystem, which could cause the failure of the redundant subsystem and a loss of essential safety function(s). It does not, however, preclude redundant Class 1E ~~6.9~~ 4.16 kV buses from being powered from the same offsite circuit.

The CTG, when used as a temporary substitute for an electrical power distribution subsystem, must be capable of starting, accelerating to required speed and voltage, and of being manually configured to provide power to the ESF bus. This sequence must be accomplished in less than 10 minutes. The CTG must also be capable of accepting required loads and maintaining rated frequency and voltage when connected to the ESF bus. The 10-minute starting time takes into account the capacity and capability of the remaining AC sources, reasonable time for startup of the CTG, and the low probability of a DBA occurring during this period.

Table B 3.8.9-1 (page 1 of 1)
AC, DC, and AC Vital Bus Electrical Power Distribution System

SYSTEM	BUS TYPE AND VOLTAGE	DIVISION 1*	DIVISION 2*	DIVISION 3*	DIVISION 4*
AC Buses	ESF Bus ~~*6900*~~ **4.16 k**V	M/C ~~*E*~~ **A3**	M/C ~~*F*~~ **B3**	M/C ~~*G*~~ **C3**	Not Applicable
	Power Center 480 V	P/C E10 P/C E20	P/C F10 P/C F20	P/C G10 P/C G20	
	Motor Control Center 480 V	~~*C/B*~~ **MCC** E110 ~~*C/B*~~ **MCC** E111 ~~*C/B*~~ **MCC** E112 ~~*C/B*~~ **MCC** E113 **MCC E114** ~~*C/B*~~ **MCC** E120 **MCC E121** ~~*C/B*~~ **MCC**E260	~~*C/B*~~ **MCC** F110 ~~*C/B*~~ **MCC** F111 ~~*C/B*~~ **MCC** F112 ~~*C/B*~~ **MCC** F113 **MCC F114** ~~*C/B*~~ **MCC** F120 **MCC F121** ~~*C/B*~~ **MCC** F260	~~*C/B*~~ **MCC** G110 ~~*C/B*~~ **MCC** G111 ~~*C/B*~~ **MCC** ~~*G112*~~ ~~*C/B*~~ **MCC** ~~*G113*~~ ~~*C/B*~~ **MCC** G120 **MCC G121** ~~*C/B*~~ **MCC** G260	
	Distribution Panel 120 V	IP A10 IP A20	IP B10 IP B20	IP C10 IP C20	**IP D10***** **IP D20*****
AC Vital Buses	CONSTANT VOLTAGE, CONSTANT FREQUENCY DISTRIBUTION PANEL 120 V	A11 A21	B11 B21	C11 C~~*12*~~ **21**	D11*** D~~*12*~~ **21***

*** *The normal power source for the Division 4 AC vital* and AC instrument power *bus subsystems is a Division 2 480 V AC motor control center*.

[This page intentionally left blank]

B 3.8 ELECTRICAL POWER SYSTEMS

B 3.8.10 Distribution Systems – Shutdown

BASES

The information in this section of the reference ABWR DCD, including all subsections, is incorporated by reference with no departures or supplements.

[This page intentionally left blank]

B 3.8 ELECTRICAL POWER SYSTEMS

B 3.8.11 AC Sources – Shutdown (Low Water Level)

BASES

The information in this section of the reference ABWR DCD, including all subsections, is incorporated by reference with the following departure and site-specific supplements. The site-specific supplements partially address COL License Information Item 16.1.

STD DEP 8.3-1

LCO

The qualified offsite circuit must be capable of maintaining rated frequency and voltage while connected to ESF buses, and of accepting required loads during an accident. The qualified offsite circuit is either the normal or alternate preferred power circuits to the AC Electric Power Distribution System that are described in DCD Tier 2, Chapter 8 and are part of the licensing basis for the plant. The normal preferred circuit consists of the switching stations breaker to the main transformers, the generator breaker, the disconnect links to the unit auxiliary transformers, and the circuit path from the offsite transmission network to all of the ~~9.6~~ 4.16 kV ESF buses required by LCO 3.8.10 including feeder breakers at the ~~9.6~~ 4.16 kV ESF buses. The alternate preferred circuit consists of the switching station breakers to the reserve transformers and the circuit path from the offsite transmission network to all of the ~~9.6~~ 4.16 kV ESF buses required by LCO 3.8.10 including feeder breakers at the ~~9.6~~ 4.16 kV ESF buses.

Each required DG must be capable of starting, accelerating to required speed and voltage, and connecting to its respective ESF bus on detection of bus undervoltage, and accepting required loads. This sequence must be accomplished within 20 seconds. Each DG must also be capable of accepting required loads within the assumed loading sequence intervals, and must continue to operate until offsite power can be restored to the ESF buses. These capabilities are required to be met from a variety of initial conditions such as: DG in standby with the engine hot, DG in standby with the engine at ambient conditions, and DG operating in parallel test mode.

Proper sequencing of loads, including tripping of nonessential loads, is a required function for DG OPERABILITY.

The CTG, when used as a temporary substitute for a required DG, must be capable of starting, accelerating to required speed and voltage, and of being manually configured to provide power to the ESF bus. This sequence must be accomplished in less than 10 minutes. The CTG must also be capable of accepting required loads and maintaining rated frequency and voltage when connected to the ESF bus. The 10-minute starting time takes into account the capacity and capability of the remaining AC sources, reasonable time for startup of the CTG, and the low probability of a DBA occurring during this period.

ACTIONS

B.1, B.2, and B.3

The CTG is considered functional when the requirements of DCD Tier 2, Section 9.5.13.19 are satisfied and the CTG is verified to start from standby conditions and achieves steady state voltage ≥ ~~[6210~~ 12.42~~]~~ kV and ≤ ~~[7590~~ 15.18~~]~~ kV, and frequency ≥ ~~[58.8]~~ Hz and ≤ ~~[61.2]~~ Hz ~~within 2~~ in less than 10 minutes.

B 3.9 REFUELING OPERATIONS

B 3.9.1 Refueling Equipment Interlocks

BASES

The information in this section of the reference ABWR DCD, including all subsections, is incorporated by reference with the following departure.

STD DEP 16.3-25

BACKGROUND

Two channels of instrumentation are provided to sense the position of the refueling machine, the loading of the refueling machine main hoist, and the full insertion of all control rods. With the reactor mode switch in the shutdown or refueling position, the indicated conditions are combined in logic circuits to determine if all restrictions on refueling equipment operations and control rod insertion are satisfied.

LCO

To prevent criticality during refueling, the refueling interlocks associated with the reactor mode switch refuel position *ensure that fuel assemblies are not loaded with any control rod withdrawn.*

To prevent these conditions from developing, the all-rods-in, the refueling machine position, and the refueling machine main hoist fuel loaded inputs are required to be OPERABLE when the reactor mode switch is in the refuel position. *These inputs are combined in logic circuits that provide refueling equipment or control rod blocks to prevent operations that could result in criticality during refueling operations.*

APPLICABILITY

In MODE 5, a prompt reactivity excursion could cause fuel damage and subsequent release of radioactive material to the environment. The refueling equipment interlocks protect against prompt reactivity excursions during MODE 5. The interlocks are only required to be OPERABLE during in-vessel fuel movement with refueling equipment associated with the interlocks when the reactor mode switch is in the refuel position. The interlocks are not required to be OPERABLE when the reactor mode switch is in the shutdown position since a control rod block ensures that control rod withdrawal cannot occur simultaneously with in-vessel fuel movements.

In MODES 1, 2, 3, and 4, the reactor pressure vessel head is on, and no fuel loading activities are possible. Therefore, the refueling interlocks are not required to be OPERABLE in these MODES.

[This page intentionally left blank]

B 3.9 REFUELING OPERATIONS

B 3.9.2 Refuel Position Rod-Out Interlock

BASES

The information in this section of the reference ABWR DCD, including all subsections, is incorporated by reference with the following departure.

STD DEP 16.3-14

APPLICABILITY

In MODE 5, with the reactor mode switch in the refuel position, the OPERABLE refuel position rod-out interlock provides protection against prompt reactivity excursions.

In MODES 1, 2, 3, and 4, the refuel position rod-out interlock is not required to be OPERABLE and is bypassed. In MODES 1 and 2, the Reactor Protection System (LCOs 3.3.1.1 and 3.3.1.2) and the control rods (LCO ~~3.1.2~~ 3.1.3) provide mitigation of potential reactivity excursions. In MODES 3 and 4, with the reactor mode switch in the shutdown position, a control rod block (LCO 3.3.5.1) ensures all control rods are inserted, thereby preventing criticality during shutdown conditions.

[This page intentionally left blank]

B 3.9 REFUELING OPERATIONS

B 3.9.3 Control Rod Position

BASES

The information in this section of the reference ABWR DCD, including all subsections, is incorporated by reference with the following departure.

STD DEP 7.7-18

BACKGROUND

Control rods provide the capability to maintain the reactor subcritical under all conditions and to limit the potential amount and rate of reactivity increase caused by a malfunction in the Control Rod Drive System. During refueling, movement of control rods is limited by the refueling interlocks (LCO 3.9.1 and LCO 3.9.2) or the control rod block with the reactor mode switch in the shutdown position (LCO 3.3.5.1).

GDC 26 of 10 CFR 50, Appendix A, requires that one of the two required independent reactivity control systems be capable of holding the reactor core subcritical under cold conditions (Ref. 1). The control rods serve as the system capable of maintaining the reactor subcritical in cold conditions.

The refueling interlocks and the RCIS GANG/SINGLE selection switch allow a single control rod to be withdrawn at any time unless fuel is being loaded into the core. However, during refueling, the RCIS ~~"Rod Test Switch"~~ is placed in the scram test mode which *allows two control rods to be withdrawn for scram testing. To preclude loading fuel assemblies into the core with a control rod withdrawn, all control rods must be fully inserted. This prevents the reactor from achieving criticality during refueling operations.*

[This page intentionally left blank]

B 3.9 REFUELING OPERATIONS

B 3.9.4 Control Rod Position Indication

BASES

The information in this section of the reference ABWR DCD, including all subsections, is incorporated by reference with the following departure.

STD DEP 7.7-10

ACTIONS

A.1.1, A.1.2, A.1.3, A.2.1, and A.2.2

Under these conditions, an inoperable full-in channel may be bypassed to allow refueling operations to proceed. An alternate method must be used to ensure the control rod is fully inserted (e.g., use the 0% position indication). Another option is to bypass Synchro A ~~(which is the current position probe) and use~~ or Synchro B so that the OPERABLE synchro providing rod position data to both channels of the RCIS is used*. If the readings of the two Synchros do not agree, the conditions will be alarmed to the operator to initiate bypass ~~of Synchro A and to use Synchro B~~.*

SURVEILLANCE REQUIREMENTS

SR 3.9.4.1

The full-in position indication channels provide input to the rod-out interlock and other refueling interlocks that require an all-rods-in permissive. The interlocks are activated when the full-in position indication for any control rod is not present, since this indicates that all rods are not fully inserted. Therefore, testing of the full-in position indication channels is performed to ensure that when a control rod is withdrawn, the full-in position indication is not present. Performing the SR each time a control rod is withdrawn is considered adequate because of the procedural controls on control rod withdrawals and the visual ~~and audible~~ indications available in the control room to alert the operator to control rods not fully inserted.

[This page intentionally left blank]

B 3.9 REFUELING OPERATIONS

B 3.9.5 Control Rod OPERABILITY – Refueling

BASES

The information in this section of the reference ABWR DCD, including all subsections, is incorporated by reference with the following departure.

STD DEP 16.3-97

LCO *Each withdrawn control rod must be OPERABLE. The withdrawn control rod is considered OPERABLE if the scram accumulator pressure is ≥ 12.75 MPaG and the control rod is capable of being automatically inserted upon receipt of a scram signal. Inserted control rods have already completed their reactivity control function.*

[This page intentionally left blank]

B 3.9 REFUELING OPERATIONS

B 3.9.6 Reactor Pressure Vessel (RPV) Water Level

BASES

The information in this section of the reference ABWR DCD, including all subsections, is incorporated by reference with the following departure.

STD DEP 16.3-35

BACKGROUND

The movement of fuel assemblies or handling of control rods within the RPV requires a minimum water level of 7.0 m above the top of the RPV flange. Sufficient water is necessary to retain iodine fission product activity in the water in the event of a fuel handling accident (Refs. 3.9.6-1 and 3.9.6-2). Sufficient iodine activity would be retained to limit offsite doses from the accident to ~~<~~ ≦ 25% of 10 CFR 100 limits, as provided by the guidance of Reference 3.

APPLICABLE SAFETY ANALYSES

During movement of fuel assemblies or handling of control rods, the water level in the RPV and the spent fuel pool is an initial condition design parameter in the analysis of a fuel handling accident in containment postulated by Regulatory Guide 1.25 (Ref. 1). A minimum water level of 7.0 m allows a decontamination factor of 100 (Ref. ~~4~~1) to be used in the accident analysis for iodine. This relates to the assumption that 99% of the total iodine released from the pellet to cladding gap of all the ~~dropped~~ damaged *fuel assembly rods is retained by the refueling cavity water. The fuel pellet to cladding gap is assumed to contain 10% of the total fuel rod iodine inventory (Ref. 1).*

Analysis of the fuel handling accident inside containment is described in Reference 2. With a minimum water level of 7.0 m and a minimum decay time of 24 hours prior to fuel handling, the analysis and test programs demonstrate that the iodine release due to a postulated fuel handling accident is adequately captured by the water, and that offsite doses are maintained within allowable limits (Ref. ~~5~~4).

APPLICABILITY

LCO 3.9.6 is applicable when moving fuel assemblies or handling control rods (i.e., movement with other than the normal control rod drive) within the RPV. The LCO minimizes the possibility of a fuel handling accident in containment that is beyond the assumptions of the safety analysis.If irradiated fuel is not present within the RPV, there can be no significant radioactivity release as a result of a postulated fuel handling accident. Requirements for fuel handling accidents in the spent fuel storage pool are covered by LCO 3.7.~~6~~8, "Fuel Pool Water Level."

BASES

REFERENCES

1. *Regulatory Guide 1.25, March 23, 1972.*

2. *DCD Tier 2, Section 15.7.4.*

3. *NUREG-0800, Section 15.7.4.*

~~4. *4. NUREG-0831, Supplement 6, Section 16.4.2.*~~

~~5~~4. *10 CFR 100.11.*

B 3.9 REFUELING OPERATIONS

B 3.9.7 Residual Heat Removal (RHR) – High Water Level

BASES

The information in this section of the reference ABWR DCD, including all subsections, is incorporated by reference with the following departure.

STD DEP 16.3-9

ACTIONS *A.1*

STD DEP 16.3-9 *Alternate decay heat removal methods are available to the operators for review and preplanning in the unit's Operating Procedures. For example, in addition to the three RHR shutdown cooling loops, this may include the use of the* Fuel Pool Cooling and Cleanup (FPC) System or the *Reactor Water Cleanup System, operating with the regenerative heat exchanger bypassed. The method used to remove the decay heat should be the most prudent choice based on unit conditions.*

[This page intentionally left blank]

B 3.9 REFUELING OPERATIONS

B 3.9.8 Residual Heat Removal (RHR) - Low Water Level

BASES

The information in this section of the reference ABWR DCD, including all subsections, is incorporated by reference with the following departures.

STD DEP 16.3-9
STD DEP 16.3-13

LCO

STD DEP 16.3-13

In MODE 5 with irradiated fuel in the reactor pressure vessel and with *the water level < 7.0 m above the reactor pressure vessel (RPV) flange two RHR shutdown cooling subsystems must be OPERABLE.*

An OPERABLE RHR shutdown cooling subsystem consists of an RHR pump, a heat exchanger, valves, piping, instruments, and controls to ensure an OPERABLE flow path.

ACTIONS

A.1

STD DEP 16.3-9

Alternate decay heat removal methods are available to the operators for review and preplanning in the unit's Operating Procedures. For example, in addition to the third RHR shutdown cooling loop, this may include the use of the Fuel Pool Cooling and Cleanup (FPC) System or the *Reactor Water Cleanup System, operating with the regenerative heat exchanger bypassed. The method used to remove decay heat should be the most prudent choice based on unit conditions.*

B.1, B.2, B.3, C.1, and C.2

If no RHR shutdown cooling subsystem is in operation, an alternate method of coolant circulation is required to be established within 1 hour. The Completion Time is modified such that the 1 hour is applicable separately for each occurrence involving a loss of coolant circulation.

During the period when the reactor coolant is being circulated by an alternate method (other than by the required RHR Shutdown Cooling System), the reactor coolant temperature and level must be periodically monitored to ensure proper function of the alternate method. The once per hour Completion Time is deemed appropriate.

STD DEP 16.3-13

~~*If at least one RHR subsystem is not restored to OPERABLE status immediately,*~~ With the required shutdown cooling subsystem(s) inoperable and the required alternate method(s) of decay heat removal not available in accordance with Required Action A.1, *additional actions are required to minimize any potential fission product release to the environment. This includes initiating immediate action to restore the following to OPERABLE status: secondary containment, one standby gas treatment subsystem, and one secondary containment isolation valve and associated instrumentation in each associated penetration*

not isolated. This may be performed as an administrative check, by examining logs or other information to determine whether the components are out of service for maintenance or other reasons. It is not necessary to perform the surveillances needed to demonstrate the OPERABILITY of the components. If, however, any required component is inoperable, then it must be restored to OPERABLE status. In this case, the surveillance may need to be performed to restore the component to OPERABLE status. Actions must continue until all required components are OPERABLE.

B 3.10 SPECIAL OPERATIONS

B 3.10.1 Inservice Leak and Hydrostatic Testing Operation

BASES

The information in this section of the reference ABWR DCD, including all subsections, is incorporated by reference with the following departure.

STD DEP 16.3-28

REFERENCES

1. *American Society of Mechanical Engineers, Boiler and Pressure Vessel Code, Section XI.*

2. *DCD Tier 2, Section ~~15.1~~* 15.6.4.

[This page intentionally left blank]

B 3.10 SPECIAL OPERATIONS

B 3.10.2 Reactor Mode Switch Interlock Testing

BASES

The information in this section of the reference ABWR DCD, including all subsections, is incorporated by reference with the following departures.

STD DEP 16.3-26
STD DEP 16.3-27

BACKGROUND

The purpose of this Special Operations LCO is to permit operation of the reactor mode switch from one position to another to confirm certain aspects of associated interlocks during periodic tests and calibrations in MODES 3, 4, and 5.

STD DEP16.3-26

The reactor mode switch is a conveniently located, multiposition, keylock switch provided to select the necessary scram functions for various plant conditions (Ref. 1). The reactor mode switch selects the appropriate trip logic for scram functions and provides appropriate bypasses. The mode switch positions and related scram interlock functions are summarized as follows:

a. *Shutdown – Initiates a reactor scram;* selects average power range monitor (APRM) neutron flux setdown, startup range neutron monitor (SRNM) high flux and neutron flux short period scrams*; bypasses main steam line isolation* ~~*and reactor high water level*~~ turbine control valve fast closure, and turbine stop valve closure *scrams;*

b. *Refuel – Selects* ~~*Neutron Monitoring System (NMS) scram function for low neutron flux level operation (but does not disable the average power range monitor scram)*~~ APRM neutron flux setdown, SRNM high flux and neutron flux short period scrams*; bypasses main steam line isolation* ~~*and reactor high water level*~~ turbine control valve fast closure, and turbine stop valve closure *scrams;*

c. *Startup/Hot Standby – Selects* ~~*NMS scram function for low neutron flux level operation (startup range neutron monitors)*~~ APRM neutron flux setdown, SRNM high flux and neutron flux short period scrams*; bypasses main steam line isolation* ~~*and reactor high water level*~~ turbine control valve fast closure, and turbine stop valve closure *scrams; and*

d. *Run –* ~~*Selects*~~ Disables all bypasses enabled by the other reactor mode switch positions; bypasses APRM neutron flux setdown and all SRNM scrams; and selects *NMS scram function for power range operation.*

LCO

STD DEP 16.3-27

As described in LCO 3.0.7, compliance with this Special Operations LCO is optional. MODES 3, 4, and 5 operations not specified in Table 1.1-1 can be performed in accordance with other Special Operations LCOs (i.e., LCO 3.10.1, "Inservice Leak and Hydrostatic Testing Operation," *LCO 3.10.3, "Rod Withdrawal – Hot Shutdown," LCO 3.10.4, "Rod Withdrawal – Cold Shutdown,"* LCO 3.10.5, "Control Rod Drive (CRD) Removal-Refueling," LCO 3.10.6, "Multiple Control Rod Withdrawal-Refueling" ~~*and LCO 3.10.7, "Control Rod Testing – Operating"*~~ LCO 3.10.8, "Shutdown Margin (SDM) Test-Refueling," LCO 3.10.11, "Low Power PHYSICS TEST" and LCO 3.10.12, "Multiple Control Rod Drive Subassembly Removal-Refueling" *without meeting this LCO or its ACTIONS. If any testing is performed that involves the reactor mode switch interlocks and requires repositioning beyond that specified in Table 1.1-1 for the current MODE of operation, the testing can be performed, provided all interlock functions potentially defeated are administratively controlled. In MODES 3, 4, and 5 with the reactor mode switch in shutdown as specified in Table 1.1-1, all control rods are fully inserted and a control rod block is initiated. Therefore, all control rods in core cells that contain one or more fuel assemblies must be verified fully inserted while in MODES 3, 4, and 5 with the reactor mode switch in other than the shutdown position. The additional LCO requirement to preclude CORE ALTERATIONS is appropriate for MODE 5 operations, as discussed below, and is inherently met in MODES 3 and 4 by the definition of CORE ALTERATIONS, which cannot be performed with the vessel head in place.*

B 3.10 SPECIAL OPERATIONS

B 3.10.3 Control Rod Withdrawal – Hot Shutdown

BASES

The information in this section of the reference ABWR DCD, including all subsections, is incorporated by reference with the following departures.

STD DEP 7.7-18
STD DEP 16.3-24

BACKGROUND

The purpose of this MODE 3 Special Operations LCO is to permit the withdrawal of a single control rod, or control rod pair, for testing while in hot shutdown, by imposing certain restrictions. In MODE 3, the reactor mode switch is in the shutdown position, and all control rods are inserted and blocked from withdrawal. Many systems and functions are not required in these conditions, due to other installed interlocks that are actuated when the reactor mode switch is in the shutdown position. However, circumstances will arise while in MODE 3 that present the need to withdraw a single control rod, or control rod pair, for various tests (e.g., friction tests, scram timing, and coupling integrity checks). These single control rod, or control rod pair, withdrawals are normally accomplished by selecting the refuel position for the reactor mode switch. A control rod pair (those associated by a shared CRD hydraulic control unit) may be withdrawn by utilizing the ~~Rod Test Switch~~ RCIS scram test mode *which "gangs" the two rods together for rod position and control purposes. This Special Operations LCO provides the appropriate additional controls to allow a single control rod, or control rod pair, withdrawal in MODE 3.*

STD DEP 7.7-18

APPLICABLE SAFETY ANALYSES

With the reactor mode switch in the refuel position, the analyses for control rod withdrawal during refueling are applicable and, provided the assumptions of these analyses are satisfied in MODE 3, these analyses will bound the consequences of an accident. Explicit safety analyses (Ref. 1) demonstrate that the functioning of the refueling interlocks and adequate SDM will preclude unacceptable reactivity excursions.

Refueling interlocks restrict the movement of control rods to reinforce operational procedures that prevent the reactor from becoming critical. These interlocks prevent the withdrawal of more than one control rod or control rod pair. Under these conditions, the core will always be shut down even with the highest worth control rod pair withdrawn if adequate SDM exists.

Control rod pairs have been established for each control rod drive hydraulic control unit (except for the one rod which has its own accumulator). These pairs are selected and analyzed so that adequate shutdown margin is maintained with any control rod pair fully withdrawn. When the ~~rod test switch~~ RCIS scram test mode *is used and GANG mode is selected for the RCIS, the selected rod pair is substituted for a single rod within the appropriate logic in order to satisfy the refuel mode rod-out interlock. The rod pair may then be withdrawn simultaneously.*

LCO

As described in LCO 3.0.7, compliance with this Special Operations LCO is optional. Operation in MODE 3 with the reactor mode switch in the refuel position can be performed in accordance with other Special Operations LCO (i.e., LCO 3.10.2, "Reactor Mode Switch Interlock Testing~~,~~" ~~and LCO 3.10.4,"Control Rod Withdrawal – Cold Shutdown"~~) without meeting this Special Operations LCO or its ACTIONS. However, if a single control rod, or control rod pair, withdrawal is desired in MODE 3, controls consistent with those required during refueling must be implemented and this Special Operations LCO applied. The refueling interlocks of LCO 3.9.2, "Refuel Position Rod-Out Interlock," required by this Special Operations LCO, will ensure that only one control rod, or control rod pair, can be withdrawn.

STD DEP 16.3-24

B 3.10 SPECIAL OPERATIONS

B 3.10.4 Control Rod Withdrawal – Cold Shutdown

BASES

The information in this section of the reference ABWR DCD, including all subsections, is incorporated by reference with the following departures.

STD DEP 7.7-18
STD DEP 16.3-20

BACKGROUND

The purpose of this MODE 4 Special Operations LCO is to permit the withdrawal of a single control rod, or control rod pair, for testing or maintenance, while in cold shutdown, by imposing certain restrictions. In MODE 4, the reactor mode switch is in the shutdown position, and all control rods are inserted and blocked from withdrawal. Many systems and functions are not required in these conditions, due to the installed interlocks associated with the reactor mode switch in the shutdown position. Circumstances will arise while in MODE 4, however, that present the need to withdraw a single control rod, or control rod pair, for various tests (e.g., friction tests, scram time testing, and coupling integrity checks). Certain situations may also require the removal of the associated control rod drives (CRD). These single or dual control rod withdrawals and possible subsequent removals are normally accomplished by selecting the refuel position for the reactor mode switch. A control rod pair (those associated by a single CRD hydraulic control unit) may be withdrawn by utilizing the ~~Rod Test Switch~~ RCIS scram test mode*, which "gangs" the two rods together for rod position and control purposes.*

APPLICABLE SAFETY ANALYSES

With the reactor mode switch in the refuel position, the analyses for control rod withdrawal during refueling are applicable and, provided the assumptions of these analyses are satisfied in MODE 4, these analyses will bound the consequences of an accident. Explicit safety analyses (Ref. 1) demonstrate that the functioning of the refueling interlocks and adequate SDM will preclude unacceptable reactivity excursions.

Refueling interlocks restrict the movement of control rods to reinforce operational procedures that prevent the reactor from becoming critical. These interlocks prevent the withdrawal of more than one control rod, or control rod pair. Under these conditions, the core will always be shut down even with the highest worth control rod pair withdrawn if adequate SDM exists.

APPLICABLE SAFETY ANALYSES (continued)

Control rod pairs have been established for each control rod drive hydraulic control unit (except for the one rod which has its own accumulator). These pairs are selected and analyzed so that adequate shutdown margin is maintained with any control rod pair fully withdrawn. When the ~~Rod Test Switch~~ RCIS scram test mode *is used and GANG mode is selected for the RCIS, the selected rod pair is substituted for a single rod within the appropriate logic in order to satisfy the refuel mode rod-out interlock. The rod pair may then be withdrawn simultaneously.*

STD 16.3-20

LCO

As described in LCO 3.0.7, compliance with this Special Operations LCO is optional. Operation in MODE 4 with the reactor mode switch in the refuel position can be performed in accordance with other LCOs (i.e., Special Operations LCO 3.10.2, "Reactor Mode Switch Interlock Testing~~,~~" ~~and LCO 3.10.3, "Control Rod Withdrawal – Hot Shutdown"~~) without meeting this Special Operations LCO or its ACTIONS. If a single control rod, or control rod pair, withdrawal is desired in MODE 4, controls consistent with those required during refueling must be implemented and this Special Operations LCO applied.

B 3.10 SPECIAL OPERATIONS

B 3.10.5 Control Rod Drive (CRD) Removal – Refueling

BASES

The information in this section of the reference ABWR DCD, including all subsections, is incorporated by reference with the following departures.

STD DEP 7.7-18
STD DEP 16.3-23

BACKGROUND

The purpose of this MODE 5 Special Operations LCO is to permit the removal of a CRD during refueling operations by imposing certain administrative controls. Refueling interlocks restrict the movement of control rods and the operation of the refueling equipment to reinforce operational procedures that prevent the reactor from becoming critical during refueling operations. During refueling operations, no more than one control rod, or control pair, is permitted to be withdrawn from a core cell containing one or more fuel assemblies. The refueling interlocks use the "full in" position indicators to determine the position of all control rods. If the "full in" position signal is not present for every control rod, then the all rods in permissive for the refueling equipment interlocks is not present and fuel loading is prevented. Also, the refuel position rod-out interlock will not allow the withdrawal of a second control rod. A control rod drive pair (those associated by a shared CRD hydraulic control unit) may be removed under the control of the rod-out interlock by utilizing the ~~rod test switch~~ RCIS scram test mode*. This switch allows the CRD pair to be treated as one CRD for purposes of the rod-out interlock.*

APPLICABLE SAFETY ANALYSES

With the reactor mode switch in the refuel position, the analyses for control rod withdrawal during refueling are applicable and, provided the assumptions of these analyses are satisfied, these analyses will bound the consequences of accidents. Explicit safety analyses (Ref. 1) demonstrate that the proper operation of the refueling interlocks and adequate SDM will preclude unacceptable reactivity excursions.

Control rod pairs have been established for each control rod drive hydraulic control unit (except for the center rod which has its own accumulator). These pairs are selected and analyzed so that adequate shutdown margin is maintained with any control rod pair fully withdrawn. When the ~~rod test switch~~ RCIS scram test mode *is used, the selected rod pair is substituted for a single rod within the appropriate logic in order to satisfy the refuel mode rod-out interlock. The rod pair may then be withdrawn simultaneously.*

STD DEP 16.3-23
LCO

*As described in LCO 3.0.7, compliance with this Special Operations LCO is optional. Operation in MODE 5 with any of the following LCOs – LCO 3.3.1.1, "*Safety System Logic and Control (SSLC) Sensor~~*SSLC*~~ *Instrumentation," LCO 3.3.1.2, "Reactor Protection System (RPS) and* Main Steam Isolation Valve (MSIV) ~~*MSIV Trip*~~ *Actuation* ~~*Logic*~~*," LCO 3.3.8.1, "*~~*Vital AC*~~ *Electric Power Monitoring," LCO 3.9.1, LCO 3.9.2, LCO 3.9.4, or LCO 3.9.5 - not met can be performed in accordance with the Required Actions of these LCOs without meeting this Special Operations LCO or its ACTIONS.*

However, if a single CRD or CRD drive pair removal from a core cell containing one or more fuel assemblies is desired in MODE 5, controls consistent with those required by LCO 3.3.1.1, LCO 3.3.1.2, LCO 3.3.8. 21, LCO 3.9.1, LCO 3.9.2, LCO 3.9.4, and LCO 3.9.5 must be implemented and this Special Operations LCO applied.

STD DEP 16.3-23
APPLICABILITY

Operation in MODE 5 is controlled by existing LCOs. The allowance to comply with this Special Operations LCO in lieu of the ACTIONS of LCO 3.3.1.1, LCO 3.3.1.2, LCO 3.3.8.~~*2*~~*1, LCO 3.9.1, LCO 3.9.2, LCO 3.9.4, and LCO 3.9.5 is appropriately controlled with the additional administrative controls required by this Special Operations LCO, which reduces the potential for reactivity excursions.*

B 3.10 SPECIAL OPERATIONS

B 3.10.6 Multiple Control Rod Withdrawal – Refueling

BASES

The information in this section of the reference ABWR DCD, including all subsections, is incorporated by reference with no departures or supplements.

[This page intentionally left blank]

B 3.10 SPECIAL OPERATIONS

B 3.10.7 Control Rod Testing – Operating

BASES

The information in this section of the reference ABWR DCD, including all subsections, is incorporated by reference with the following departure.

STD DEP 16.3-4

LCO

As described in LCO 3.0.7, compliance with this Special Operations LCO is optional. Control rod testing may be performed in compliance with the prescribed sequences of LCO 3.1.6, and during these tests, no exceptions to the requirements of LCO 3.1.6 are necessary. For testing performed with a sequence not in compliance with LCO 3.1.6, the requirements of LCO 3.1.6 may be suspended, provided additional administrative controls are placed on the test to ensure that the assumptions of the special safety analysis for the test sequence remain valid. When deviating from the prescribed sequences of LCO 3.1.6, ~~individual control rods must be bypassed in the Rod Action and Position Information (RAPI) Subsystem~~ the approved control rod sequence must be enforced by the RWM (LCO 3.3.5.1 Function 1b); or *~~A~~assurance that the test sequence is followed can be provided by a second licensed operator or other qualified member of the technical staff verifying conformance to the approved test sequence. ~~These controls are consistent with those normally applied to operation in the startup range as defined in SR 3.3.5.1.7, when it is necessary to deviate from the prescribed sequence (e.g., an inoperable control rod that must be fully inserted).~~*

SURVEILLANCE REQUIREMENTS

SR 3.10.7.1 and SR 3.10.7.2

~~*During performance of the special test, a second licensed operator or other qualified member of the technical staff is required to verify conformance with the approved sequence for the test. This verification must be performed during control rod movement to prevent deviations from the specified sequence. This Surveillance provides adequate assurance that the specified test sequence is being followed and is also supplemented by SR 3.3.5.1.7, which requires verification of the bypassing of control rods in RAPI and subsequent movement of these control rods.*~~ The control rod withdrawal sequences during the special tests may be enforced by the RWM (LCO 3.3.5.1, Function 1.b, MODE 1 or 2 requirements, as applicable) or by a second licensed operator or other qualified member of the technical staff. As noted, either the applicable SRs for the RWM (LCO 3.3.5.1) must be satisfied according to the applicable Frequency (SR 3.10.7.1 and SR 3.10.7.2), or the proper movement of control rods must be verified. This latter verification (i.e., SR 3.10.7.1) must be performed during control rod movement to prevent deviations from the specified sequence. Either of these surveillances provides adequate assurance that the specified test sequence is being followed.

[This page intentionally left blank]

B 3.10 SPECIAL OPERATIONS

B 3.10.8 SHUTDOWN MARGIN (SDM) Test – Refueling

BASES

The information in this section of the reference ABWR DCD, including all subsections, is incorporated by reference with the following departure.

STD DEP 16.3-18

ACTIONS

A.1

With one or more of the requirements of this LCO not met for reasons other than Condition B*, the testing should be immediately stopped by placing the reactor mode switch in the shutdown or refuel position. This results in a condition that is consistent with the requirements for MODE 5 where the provisions of this Special Operations LCO are no longer required.*

B.1 and B.2

With the requirements of this LCO not met because a control rod is not coupled to its associated CRD*, the affected control rod shall be declared inoperable* and the reactor mode switch shall be placed in the Shutdown or Refuel position. *This results in a condition that is consistent with the requirements for MODE 5 where the provisions of this Special Operations LCO are no longer required* but the requirements of LCO 3.9.5, "Control Rod OPERABILITY - Refueling" apply. If the reactor mode switch were to be left in the startup/hot standby position, the unit would be considered to be in Mode 2 because LCO 3.10.8.c, which requires each withdrawn control rod to be coupled to its associated CRD, would not be met. Action must be initiated immediately to ensure that the Required Action of LCO 3.9.5, to fully insert inoperable withdrawn control rods, is taken.

[This page intentionally left blank]

B 3.10 SPECIAL OPERATIONS

B 3.10.9 Reactor Internal Pumps – Testing

BASES

The information in this section of the reference ABWR DCD, including all subsections, is incorporated by reference with no departures, but the following site-specific supplements. The site-specific supplements partially address COL License Information Item 16.1.

BACKGROUND

The purpose of this Special Operations LCO in MODES 1 and 2 is to allow either the PHYSICS TESTS or the Startup Test Program to be performed with less than ~~[~~nine~~]~~ reactor internal pumps in operation. Testing performed as part of the Startup Test Program (Ref. 1), or PHYSICS TESTS authorized under the provisions of 10 CFR 50.59 (Ref. 2) or otherwise approved by the NRC, may be required to be performed under natural circulation conditions with the reactor critical. LCO 3.4.1, "Reactor Internal Pumps (RIP) Operating," requires that ~~[~~nine~~]~~ reactor internal pumps be in operation during MODES 1 and 2. This Special Operations LCO provides the appropriate additional restrictions to allow testing at natural circulation conditions or with less than ~~[~~nine~~]~~ reactor internal pumps in operation with the reactor critical.

APPLICABLE SAFETY ANALYSES

The operation of the Reactor Coolant Recirculation System is an initial condition assumed in the design basis loss of coolant accident (Ref. 3). During a LOCA the operating RIPs are all assumed to trip at time zero due to a coincident loss of offsite power. The subsequent mean core flow coastdown will be immediate and rapid because of the relatively low inertia of the pumps. During PHYSICS TESTS ≤ 5% RTP, or limited testing during the Startup Test Program for the initial cycle, the decay heat in the reactor coolant is sufficiently low, such that the consequences of an accident are reduced and the coastdown characteristics of the RIPs are not important. In addition, the probability of a Design Basis Accident (DBA) or other accidents occurring during the limited time allowed at natural circulation or with less than ~~[~~nine~~]~~ RIPs in operation is low.

As described in LCO 3.0.7, compliance with Special Operations LCOs is optional, and therefore, no criteria of NRC Policy Statement apply. Special Operations LCOs provide flexibility to perform certain operations by appropriately modifying requirements of other LCOs. A discussion of the criteria satisfied for the other LCOs is provided in their respective Bases.

LCO

As described in LCO 3.0.7, compliance with this Special Operations LCO is optional. However, to perform testing at natural circulation conditions or with less than ~~[~~nine~~]~~ RIPs operating, operations must be limited to those tests defined in the Startup Test Program or approved PHYSICS TESTS performed at ≤ 5% RTP. To minimize the probability of an accident, while operating at natural circulation conditions or with

LCO (CONTINUED)

less than ~~[~~nine~~]~~ operating RIPs the duration of these tests is limited to ≤ 24 hours. This Special Operations LCO then allows suspension of the requirements of LCO 3.4.1 during such testing. In addition to the requirements of this LCO, the normally required MODE 1 or MODE 2 applicable LCOs must be met.

APPLICABILITY

This Special Operations LCO may only be used while performing testing at natural circulation conditions or while operating, with less than ~~[~~nine~~]~~ RIPs, as may be required as part of the Startup Test Program or during low power PHYSICS TESTS. Additional requirements during these tests to limit the operating time at natural circulation conditions reduce the probability that a DBA may occur during natural circulation conditions. Operations in all other MODES are unaffected by this LCO.

ACTIONS

A.1

With the testing performed at natural circulation conditions or less than ~~[~~nine~~]~~ RIPs operating, and the duration of the test exceeding the 24 hour time limit, actions should be taken to promptly shut down. Inserting all insertable control rods will result in a condition that does not require all ~~[~~nine~~]~~ RIPs to be in operation. The allowed Completion Time of 1 hour provides sufficient time to insert the withdrawn control rods.

B.1

With the requirements of this LCO not met for reasons other than those specified in Condition A (e.g., low power PHYSICS TESTS exceeding 5% RTP, or unapproved testing at natural circulation), the reactor mode switch should immediately be placed in the shutdown position. This results in a condition that does not require all ~~[~~nine~~]~~ RIPs to be in operation. The action to immediately place the reactor mode switch in the shutdown position prevents unacceptable consequences from an accident initiated from outside the analysis bounds. Also, operation beyond authorized bounds should be terminated upon discovery.

SURVEILLANCE REQUIREMENTS

SR 3.10.9.1 and SR 3.10.9.2

Periodic verification of the administrative controls established by this LCO will ensure that the reactor is operated within the bounds of this LCO. Because the 1 hour Frequency provides frequent checks of the LCO requirements during the allowed 24 hour testing interval, the probability of operation outside the limits concurrent with a postulated accident is reduced even further.

REFERENCES

1. *DCD Tier 2, Chapter 14.*
2. *10 CFR 50.59*
3. *DCD Tier 2, Section 6.3.3.*

[This page intentionally left blank]

B 3.10 SPECIAL OPERATIONS

B 3.10.10 Training Startups

BASES

The information in this section of the reference ABWR DCD, including all subsections, is incorporated by reference with no departures or supplements.

[This page intentionally left blank]

B 3.10 SPECIAL OPERATIONS

B 3.10.11 ~~*Training Startups*~~ Low Power PHYSICS TESTS

BASES

The information in this section of the reference ABWR DCD, including all subsections, is incorporated by reference with no departures or supplements.

[This page intentionally left blank]

B 3.10 SPECIAL OPERATIONS

B 3.10.12 Multiple Control Rod Drive Subassembly Removal – Refueling

BASES

The information in this section of the reference ABWR DCD, including all subsections, is incorporated by reference with the following departure.

STD DEP 16.3-17

BACKGROUND

The purpose of this MODE 5 Special Operations LCO is to permit multiple control rod drive subassembly removal during refueling by imposing certain administrative controls. For the purposes of this LCO, CRD subassembly removal is the removal of the CRD motor assembly, which includes the motor, brake and synchro, the position indicator probe (PIP) and the spool piece assembly, with the associated control rod maintained in the fully inserted position by applicable *mechanical anti-rotational locking devices* (i.e., one device applies to FMCRD motor assembly removal prior to spool piece removal, and another device applies to spool piece removal following motor assembly)*. With the CRD subassembly removed, control rod position indication is not available in the control room. Reference 2 contains a description of the CRD subassembly removal.*

This Special Operations LCO establishes the necessary administrative controls to allow bypass of the "full in" position indicators for CRDs with subassemblies removed for maintenance and the associated rods maintained fully inserted by their applicable *mechanical anti-rotation locking devices. LCO 3.10.6 establishes administrative controls for complete removal of multiple CRDs where the control rods are fully withdrawn.*

APPLICABLE SAFETY ANALYSES

Explicit safety analyses (Ref. 1) demonstrate that the functioning of the refueling interlocks and adequate SDM will prevent unacceptable reactivity excursions during refueling. To allow multiple control rod drive subassembly removal, the "full in" position indication is allowed to be bypassed for each control rod drive with its subassembly removed and the associated control rod maintained fully inserted by its applicable *mechanical anti-rotation locking devices.*

APPLICABILITY

Operation in MODE 5 is controlled by existing LCOs. The exceptions from other LCO requirements (e.g., the ACTIONS of LCO 3.9.3, LCO 3.9.4 or LCO 3.9.5) allowed by this Special Operations LCO are appropriately controlled by allowing only the removal of non-adjacent control rod drive subassemblies whose "full in" indicators are allowed to be bypassed and associated control rods maintained fully inserted by their applicable *anti-rotation device~~s~~.*

[This page intentionally left blank]