# 10.0 Steam and Power Conversion System

The information in this section of the reference ABWR DCD, including all subsections, tables and figures, is incorporated by reference with the following departures and supplements.

STD DEP T1 3.4-1

STP DEP 9.2-3 (Figure 10.1-1)

STP DEP 10.1-1

STP DEP 10.1-2 (Figure 10.1-1)

STP DEP 10.1-3 (Figure 10.1-2)

STP DEP 10.1-4 (Figure 10.1-3)

STP DEP 10.2-1 (Table 10.1-1, Figure 10.1-1)

STP DEP 10.4-2 (Table.10.1-1)

STD DEP 10.4-5 (Table 10.1-1)

## 10.1 Summary Description

STP DEP 10.2-1

*Steam, generated in the reactor, is supplied to the high-pressure turbine and the* second stage reheaters of the *steam moisture separators/reheaters.* Extraction steam from the high-pressure turbine is supplied to the first stage reheaters of the moisture separators/reheaters. *Steam leaving the high-pressure turbine passes through a combined moisture separator/reheater prior to entering the low pressure turbines. The moisture separator drains, steam reheater drains, and the drains from the two high pressure feedwater heaters are pumped back to the reactor feedwater pump suction by the heater drain pumps. The low pressure feedwater heater drains are cascaded to the condenser.*

STP DEP 9.2-3

STD DEP 10.4-5

*Steam exhausted from the low-pressure turbines is condensed and deaerated in the condenser. The condensate pumps take suction from the condenser hotwell and deliver the condensate through the filters and demineralizers, gland steam condenser, steam jet air ejector condensers, ~~offgas recombiner condensers,~~ and* to the suction of the condensate booster pumps. The condensate booster pumps discharge condensate *through the low-pressure feedwater heaters to the reactor feed pumps. The reactor feed pumps discharge through the high pressure feedwater heaters to the reactor.*

The conceptual design information in this section of the reference ABWR DCD is replaced with the following site-specific supplemental information.

*Major S&PC System design features are summarized in Table 10.1-1. The system main ~~conceptual~~ features are illustrated on Figure 10.1-1~~, assuming a triple pressure condenser. This type of condenser and other site dependent ABWR plant features and parameters are reported herein based on typical central U.S. site conditions. They are given here to more completely define the ABWR Turbine Island standard design and to be used as references in reviewing future ABWR plant-specific licensing submittals, and confirming that such submittals are indeed consistent with the standard design. Nothing in the ABWR Standard Plant design is meant to preclude the use of a once-through cooling system and a single pressure condenser nor will such changes affect the Nuclear Island~~.*

STP DEP 10.1-1

~~*The inlet pressure at the turbine main steam valves will not exceed rated pressure, except when operating above 95% of the maximum guaranteed turbine flow. It will be permissible to increase the inlet pressure to 103% of rated pressure, provided the control valve position is adjusted so that the resulting steam flow does not exceed the steam flow that is obtained when operating at rated pressure with control valves wide open.*~~ The inlet pressure at the turbine main steam valves reflects reactor power, steam line flow and pressure regulator programming, but never exceeds the pressure for which the turbine components and steam lines are designed.

STD DEP T1 3.4-1

*Non-safety-related instrumentation is provided to measure and control flow, pressure, differential pressure, temperature, and level throughout the steam and condensate system. The instrumentation provides input signals to the ~~plant computer, recorders and control systems~~* Plant Information and Control System which maintain the normal operation of the plant.

## Table 10.1-1 Summary of Important Design Features and Performance Characteristics of the Steam and Power Conversion System

| | |
|---|---|
| **Nuclear Steam Supply System, Full Power Operation** | |
| *Rated reactor core power, MWt* | *3,926* |
| *Rated NSSS power, MWt* | *3,919* |
| *Reactor steam outlet pressure, MPaA* | *7.17* |
| *Reactor nominal outlet steam moisture,%* | *0.1* |
| *Reactor inlet feedwater temperature, °C* | *215.6* |
| **Turbine-Generator** | |
| *Nominal Rating, MWe* | *~1,400* |
| *Turbine type* | *Tandem compound, six flow, 132.08 cm last-stage bucket*<br>*1 high pressure turbine*<br>*3 low pressure turbines* |
| *Operating speed, rad/s* | *188.5* |
| *Turbine throttle steam pressure, MPaA* | *6.79* |
| *Throttle steam nominal moisture, %* | *0.4* |
| **Moisture Separator/Reheaters (MSRs)** | |
| *Number of MSRs per unit* | ~~*4*~~ **2** |
| *Stages of moisture separation* | *1* |
| *Stages of reheat* | ~~*1*~~ **2** |
| **Main Condenser (Site Dependent)** | |
| *Type* | ~~*Multiple*~~ **Single** *pressure* |
| *Design duty, kW* | ~~*~25.49 x 10^5*~~ **251.50 x $10^4$** |
| *Circulating water flow rate, $m^3$/h* | ~~*~136290*~~ **272,550** |
| *Circulating water temperature rise, °C* | ~~*~16.8*~~ **7.99** |
| **Condensate Pumps** | |
| *Number of pumps* | ~~*4 50%*~~ **4 x 33%** *(3 operating and 1 standby)* |
| *Pump type* | *Vertical, centrifugal multi-stage* |
| *Driver type* | ~~*Fixed speed motor*~~ **Induction motor** |
| *Design Conditions:* | |
| *Normal flow, $m^3$/h* | ~~*~1817.2*~~ **~2300** |
| *Total head, m* | ~~*426.72*~~ **~ 150** |
| *Rated motor power, kW* | ~~*~3800*~~ **~ 1300** |

**Table 10.1-1 Summary of Important Design Features and Performance Characteristics of the Steam and Power Conversion System (Continued)**

| | |
|---|---|
| **Condensate Booster Pumps** | |
| **Number of Pumps** | **4x33% (3 operating, 1 standby)** |
| **Pump Type** | **Horizontal, centrifugal, multi-stage** |
| **Driver Type** | **Induction motor** |
| **Design Conditions:** | |
| **Normal Flow, $m^3/h$** | **~2300** |
| **Total Head, m** | **~280** |
| **Rated Motor Power, kW** | **~2300** |
| **Feedwater Heaters** | |
| *Low Pressure Heaters* | |
| *a. No. 1* | |
| *Number per stage* | *3* |
| *Stage pressure, kPaA* | ~~*24.5*~~ **43.5** |
| *Duty per shell, kW* | ~~*22.4*~~ **59.8** *x* $10^3$ |
| **Drain Cooler Duty per shell, kW** | **13.5 x $10^3$** |
| *b. No. 2* | |
| *Number per stage* | *3* |
| *Stage pressure, kPaA* | ~~*60.8*~~ **90.0** |
| *Duty per shell, kW* | ~~*48.85*~~ **38.4** *x* $10^3$ |
| *c. No. 3* | |
| *Number per stage* | *3* |
| *Stage pressure, kPaA* | ~~*147*~~ **249** |
| *Duty per shell, kW* | ~~*51.88*~~ **62.8** *x* $10^3$ |
| *d. No. 4* | |
| *Number per stage* | *3* |
| *Stage pressure, kPaA* | ~~*330*~~ **439** |
| *Duty per shell, kW* | ~~*54.90*~~ **40.9** *x* $10^3$ |
| *High Pressure Heaters* | |
| *e. No. 5* | |
| *Number per stage* | *2* |
| *Stage pressure, kPaA* | ~~*1,353*~~ **1244** |
| *Duty per shell, kW* | ~~*171.55*~~ **125.3** *x* $10^3$ |
| *f. No. 6* | |
| *Number per stage* | *2* |
| *Stage pressure, kPaA* | ~~*2,311*~~ **2250** |
| *Duty per shell, kW* | ~~*128.73*~~ **136.5** *x* $10^3$ |

**Table 10.1-1 Summary of Important Design Features and Performance Characteristics of the Steam and Power Conversion System (Continued)**

| | |
|---|---|
| **Reactor Feedwater Pumps** | |
| *Number of pumps* | *3 normally operating (33~~-65~~%),* **1 standby,** *variable speed* |
| *Pump type* | *Horizontal, centrifugal, single stage* |
| *Driver type* | *electric motors* |
| *Design conditions:* | |
| *Main pumps:* | |
| *Normal flow, $m^3/h$* | *~~4202.27~~* **~3300** |
| *Total head, m* | *~~640.08~~* **~ 760** |
| *Rated motor power, kW* | *~~11,200~~* **~ 8400** |
| **Heater Drain Pumps** | |
| *Number of pumps* | *~~2 x 50%~~* **4 x 33% (3 operating, 1 standby)** |
| *Pump type* | *Horizontal, centrifugal* |
| *Driver type* | *~~Fixed speed motor~~* **Induction Motor** |
| *Design conditions:* | |
| *Normal flow, $m^3/h$* | *~~1362.9~~* **~1250** |
| *Total head, m* | *~~228~~* **~ 370** |
| *Rated motor power, kW* | *~~1850~~* **~ 1600** |
| **High Press. Heater Drain Tank** | |
| Number of tanks | ~~2~~ **1** |
| *Design, pressure ~~kPa~~* ***MPaG*** | *~~1,517~~* **1.67 & Full Vac.** |
| *Tank capacity*, **$m^3$** | *~~56,700 L*~~* **~ 98** |
| **Low Press. Heater Drain Tanks** | |
| **Number of tanks** | **3** |
| **Design, pressure MPaG** | **0.35 & Full Vac.** |
| **Tank capacity, m3** | **~4** |

~~* Nominal depending on specific Turbine Building layout considerations~~

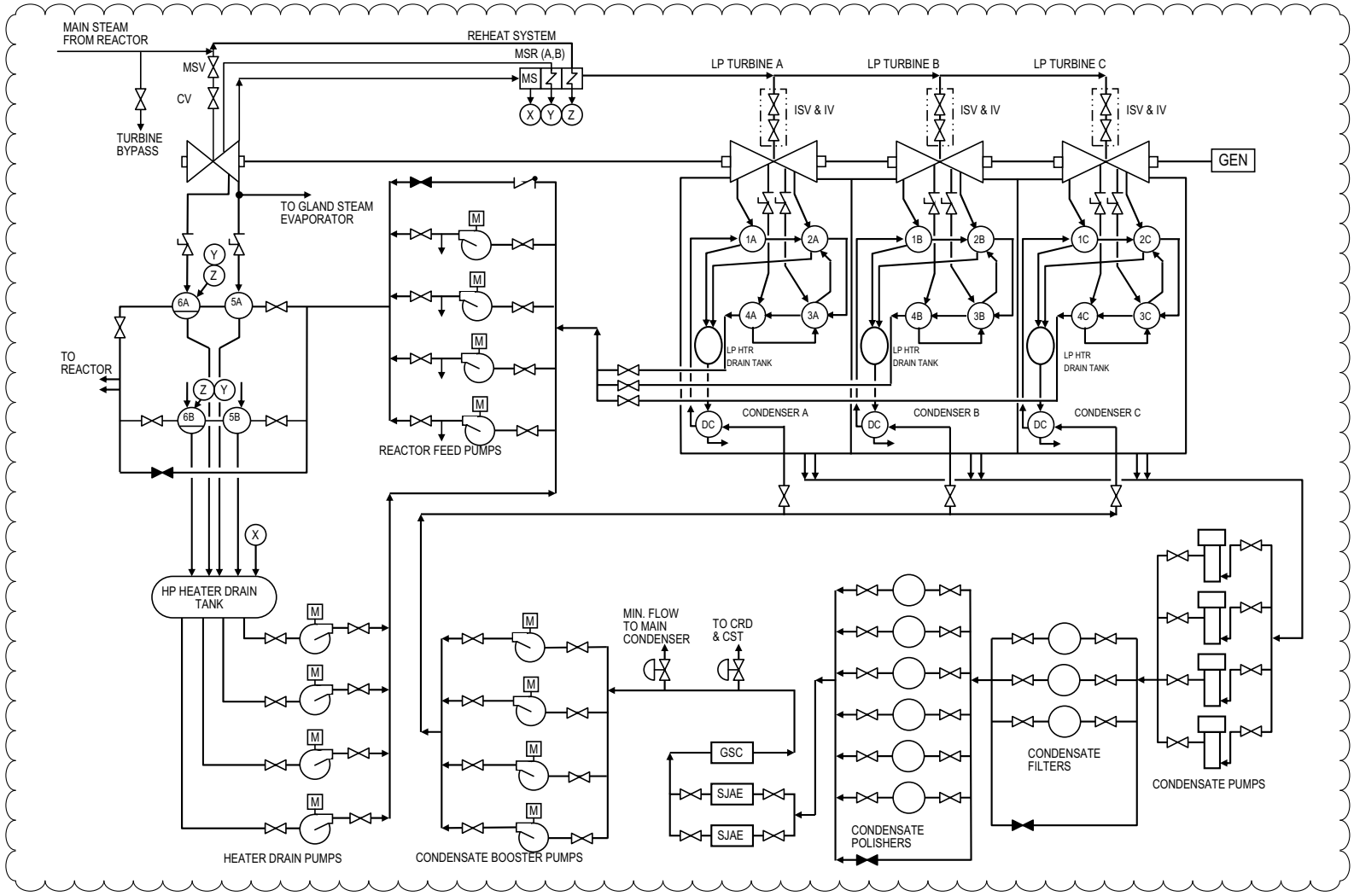


**Figure 10.1-1 Reference Steam and Power Conversion System**

*The following figures are located in Chapter 21*

- *Figure 10.1-2 Reference Heat Balance for Guaranteed Reactor Rating*
- *Figure 10.1-3 Reference Heat Balance for Valves-Wide-Open (VWO)*