Attachment 2: Design Calculations for United States Geological Survey 1MW Mark I TRIGA Reactor – Tank Liner

DESIGN CALCULATIONS
FOR
UNITED STATES GEOLOGICAL SURVEY
1MW MARK I TRIGA REACTOR - TANK LINER

BY

GILLAN'S ENGINEERING, INC.
5126 W 38TH AVE
DENVER, CO 80212
(303)480-0471

PREPARED BY
DENNIS R. MOSS

CHECKED BY
LELAND E. GILLAN

REVISED OCTOBER 5, 1987

CALCULATIONS and SKETCHES

DATE 8-23-87
CONT. NO. GILLANS ENG
BY DRM CHK'D
SHEET NO.

USGS 1MW TRIGA REACTOR
TANK LINER

MW		gals/mol
16	C_1	8.40
30	C_2	9.67
44	C_3	10.44
58	IC_4	12.40
58	C_4	11.95
72	IC_5	13.84
72	C_5	13.74
86	IC_6	15.5
86	C_6	15.59
100	IC_7	17.2
100	C_7	17.49
114	C_8	19.41
128	C_9^+	9.64
142	C_{10}^+	9.67

TABLE OF CONTENTS

SHT NO	SECT	TITLE
1	1.0	PURPOSE
1	2.0	REFERENCES
2	3.0	DESIGN DATA
3	4.0	MATERIALS OF CONSTRUCTION
4	5.0	DRAWINGS - FIG 1
5		- FIG 2
6		- FIG 3
7		- FIG 4
8	6.0	TANK VOLUME
8,9	7.0	TANK WEIGHTS
10	8.0	SHELL THK REQD
11-15	9.0	SEISMIC DESIGN
15-20	10.0	TANK BOTTOM DESIGN
21,22	11.0	TOP E RING
23,24	12.0	LIFTING LUGS
25	13.0	TANK LINER THERMAL EXPANSION
26,27,28	14.0	REACTOR LEVELING STAND
29	15.0	PUMP TUBES

MISC MW		gals/mol
44	CO_2	8.47
34	H_2S	5.18
17	N_2	4.18
2	H_2	3.38

FORM E-050 1-6-86
PRINTED IN U.S.A.

MW	gals/mol
16	C_1 8.40
30	C_2 9.87
44	C_3 10.44
58	IC_4 12.40
58	C_4 11.95
72	IC_5 13.88
72	C_5 13.74
86	IC_6 15.5
86	C_6 15.59
100	IC_7 17.2
70	C_7 17.49
114	C_8 19.41
78	$C_2^=$ 9.64
42	$C_3^=$ 9.67

1.0 PURPOSE

THESE CALCULATIONS ARE PREPARED IN ACCORDANCE WITH ASME CODE, SECTION VIII, DIV 1, 1986 EDITION. ALTHOUGH BASICALLY THE TANK LINER IS A WATER FILLED ATMOSPHERIC TANK AND IS UNPRESSURIZED THE ASME PRESSURE VESSEL CODE PROVIDES A SOUND BASIS FOR A REASONABLE, SAFE AND ECONOMICAL DESIGN. THIS DESIGN SHALL INCLUDE SEISMIC, STRENGTH AND THERMAL CALCULATIONS FOR THE MECHANICAL AND STRUCTURAL INTEGRITY OF THE TANK LINER AND LIFTING LUGS

2.0 REFERENCES

MISC	
MW	gals/mol
44	CO_2 8.47
	H_2S 5.18
	N_2 4.16
	H_2 2.38

1) ASME BOILER AND PRESSURE VESSEL CODE, SECTION VIII, DIVISION 1 1986 EDITION
2) ROARK, R.N. AND YOUNG, W.C., FORMULAS FOR STRESS AND STRAIN, 5th EDITION, McGRAW HILL BOOK CO, 1975
3) API 650, WELDED STEEL TANKS FOR OIL STORAGE, 7th ED, NOV 1980
4) BEDNAR, H. PRESSURE VESSEL DESIGN HANDBOOK, 1st EDITION, VAN NOSTRAND REINHOLD CO, 1981, SECT 3.9
5) "ISAKOWER, R.I., "RING REDUNDANTS", MACHINE DESIGN, MAR 1965

FORM E-050 1-6-86
PRINTED IN U.S.A.

M	gals/mol
	C_1 8.40
30	C_2 9.67
44	C_3 10.44
58	IC_4 12.40
	C_4 11.95
	IC_5 13.88
	C_5 13.74
86	IC_6 15.5
86	C_6 15.59
100	IC_7 17.2
	C_7 17.49
	C_8 19.41
	C_9^+ 9.84
42	$C_3^=$ 9.87

3.0 DESIGN DATA

DESIGN PRESSURE : INT : 10.83 PSI
EXT : 1.184 PSI

DESIGN TEMP : MAX : 150°F
MIN : 50°F

DESIGN LIQUID LEVEL : FULL OF WATER

CORROSION ALLOWANCE : NONE

JOINT EFFICIENCY : 1.0 (100% X-RAY)

SPECIFIC GRAVITY OF CONTENTS : 1.0 (WATER)

SEISMIC : PER API 650, APP'E', ZONE 1

LOCATION : DENVER, COLORADO
BLDG. 15, DENVER FEDERAL CENTER

MISC	
MW	gals/mol
	CO_2 8.47
	H_2S 5.18
	N_2 4.18
	H_2 3.38

4.0 MATERIALS OF CONSTRUCTION

SPEC	ALLOY	PRODUCT	PROPERTIES (KSI) F_T	F_y	S_{amb}	S_{150}
SB-209	6061-T4	SHT/PL	30	16	7.5	7.5
	5052-H32	"	31	23	7.8	7.8
	5154-H32	"	36	26	9.0	9.0
SB-241	6061-T4	PIPE				
	5052-0	"	25	10	6.3	6.3
SB-221	6061-T4	BAR/SHAPE	26	16	6.5	6.5
	5154-0	"	30	11	7.5	7.5
SB-211	6061-T6	BOLTS	42	35	8.4	8.4

NOTES:

(1) MATL SPECIFIED FOR TANK SHELL, BTM AND PL MAY BE TYPES 6061-T4, 5052-H32 OR 5154-H32. SINCE 6061-T4 HAS THE LOWEST DESIGN PROPERTIES THIS REPORT WILL UTILIZE 6061-T4 MATL. IF MATL OF GREATER STRENGTH ARE USED THEY WILL BE ACCEPTABLE

(2) F_T = MIN SPECIFIED TENSILE STRENGTH

F_y = MIN SPECIFIED YIELD

S = ALLOWABLE STRESS, TENSION AT AMBIENT OR 150°F

OTHER MATERIAL PROPERTIES (FOR 6061 ALLOY

MOD OF ELAS : 9.8×10^6
COEF OF THERMAL EXPANSION : 12.76×10^{-6} in/in/°F
POISSONS RATIO : .3
WEIGHT : .098 lb/in³

MW		gals/mol
16	C_1	6.40
30	C_2	9.87
44	C_3	10.44
58	IC_4	12.40
58	C_4	11.99
72	IC_5	13.88
72	C_5	13.74
86	IC_6	15.5
86	C_6	15.59
100	IC_7	17.2
100	C_7	17.49
114	C_8	19.41
28	$C_2^=$	9.64
42	$C_3^=$	9.87

MISC MW		gals/mol
44	CO_2	6.47
4	H_2S	5.18
8	N_2	4.16
2	H_2	3.38

USGS 1 MW TRIGA MK I - TANK LINER

FIG 1 : SECTION VIEW OF OVERALL

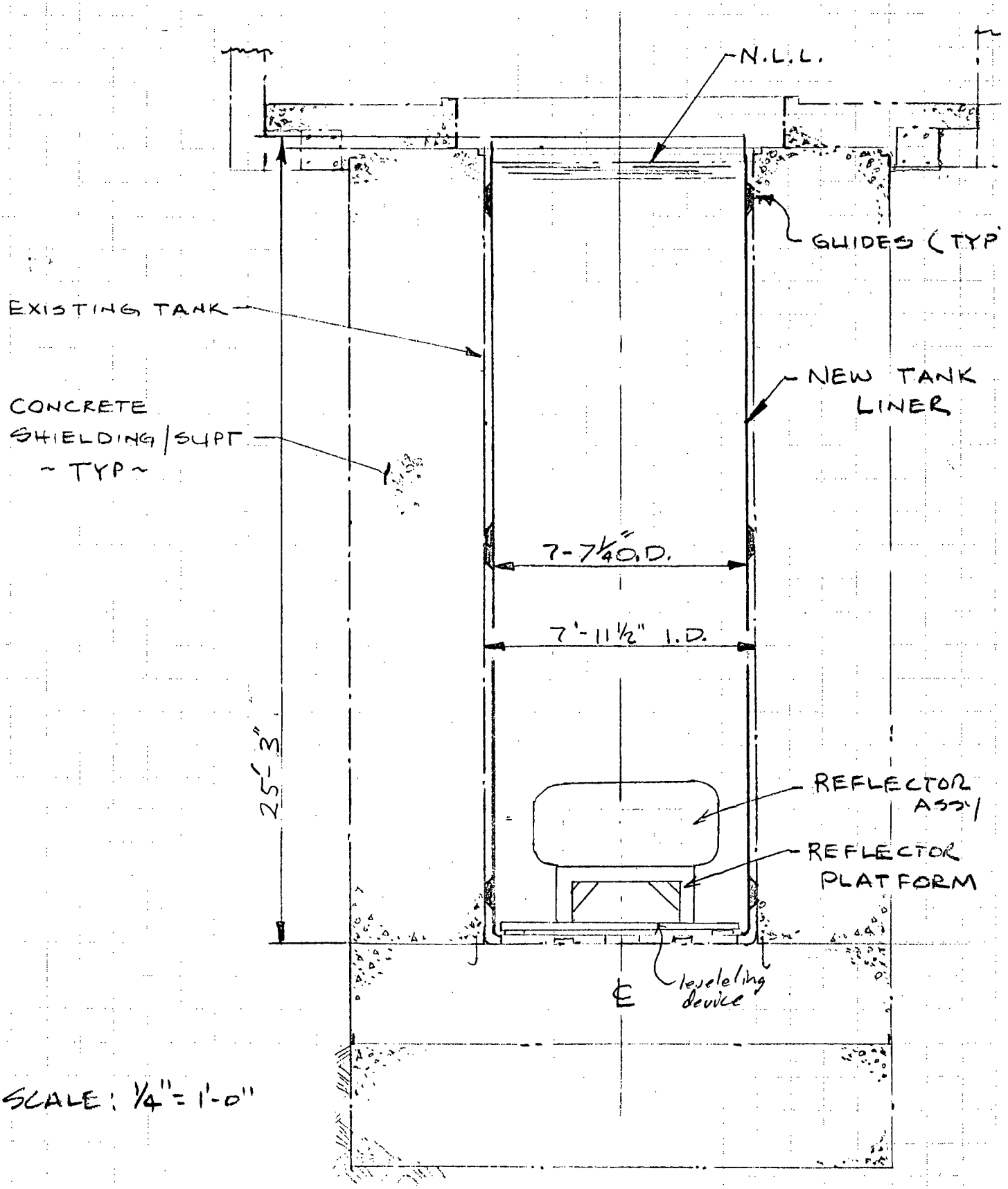

SCALE: ¼" = 1'-0"

FORM E-052 R
PRINTED IN U.S.

LEG

FIG 2 : SECTIONAL VIEW OF
TANK TOP CONFIGURATION
USGS 1MW TRIGA MK I - TANK LINER

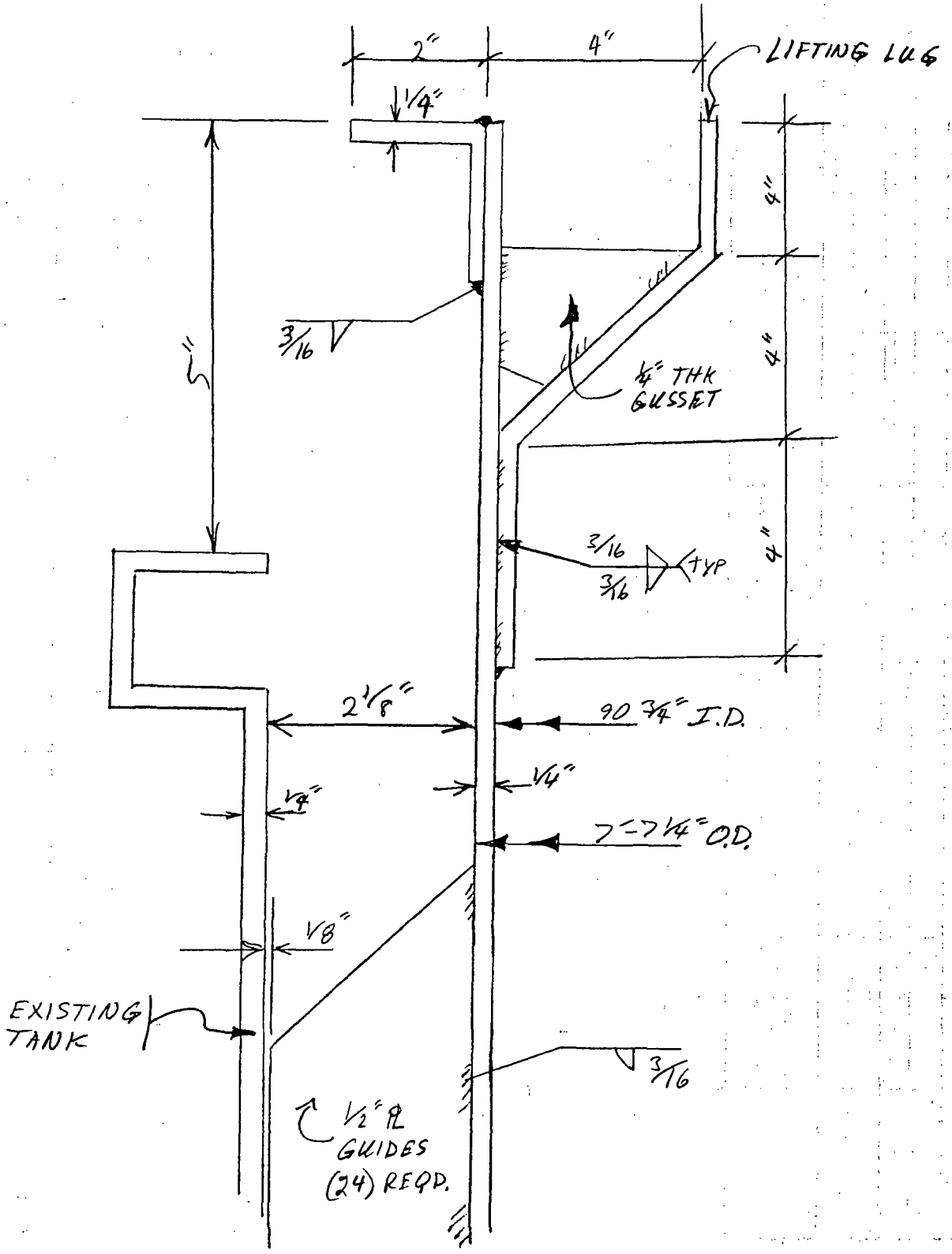

22-141 50 SHEETS
22-142 100 SHEETS
22-144 200 SHEETS
AMPAD

MW	gals/mol
16	C_1 8.40
30	C_2 9.67
44	C_3 10.44
58	IC_4 12.40
58	C_4 11.99
72	IC_5 13.88
72	C_5 13.74
86	IC_6 15.6
86	C_6 15.69
100	IC_7 17.2
100	C_7 17.49
114	C_8 19.41
78	$C_2^=$ 9.64
42	$C_3^=$ 9.87

MISC MW	gals/mol
44	CO_2 6.47
	H_2S 5.18
	N_2 4.16
	H_2 3.38

FIG 3: SECTIONAL VIEW OF TANK BTM CONFIGURATION

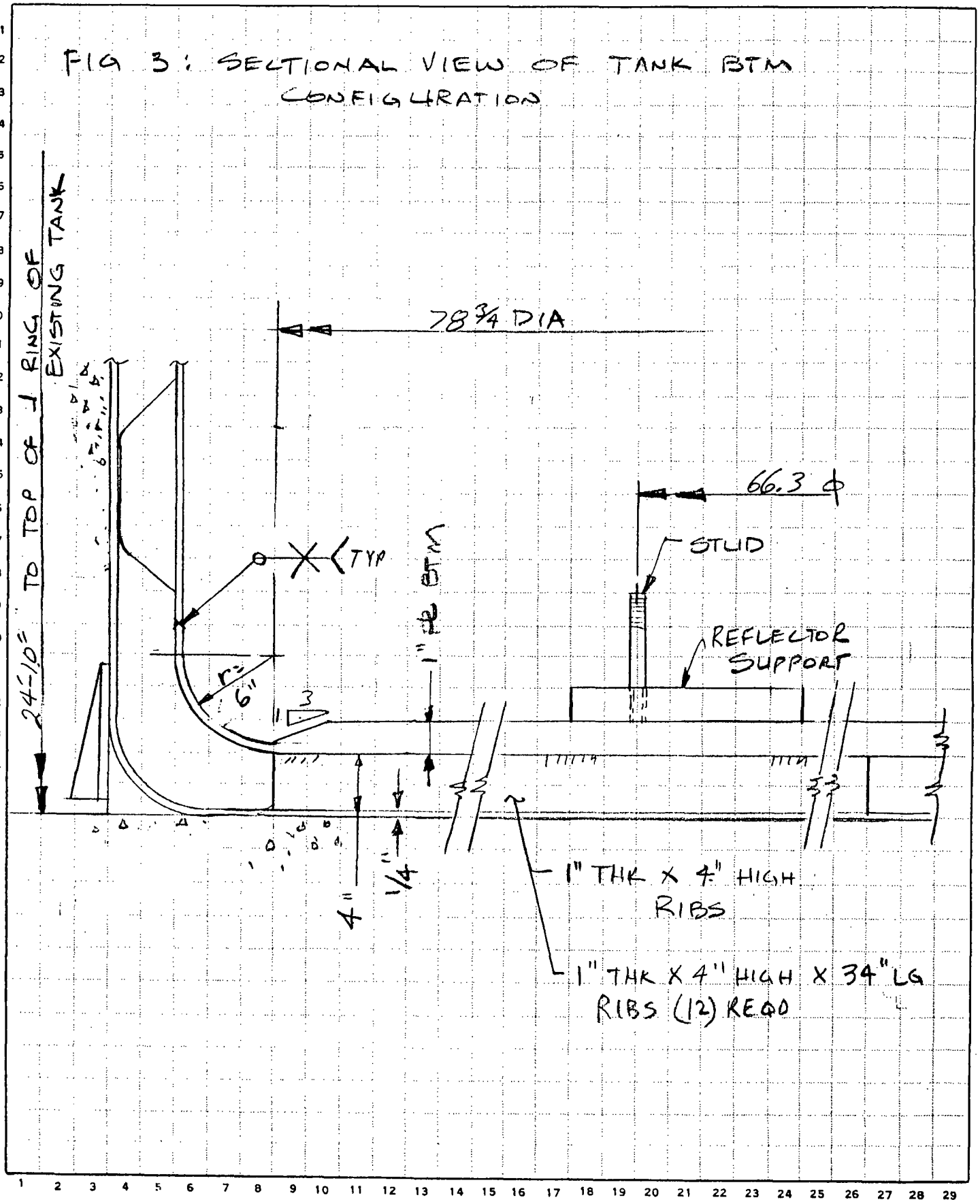

MW	gals/mol
16	C_1 8.40
30	C_2 9.67
44	C_3 10.44
58	IC_4 12.40
58	C_4 11.95
72	IC_5 13.86
72	C_5 15.74
86	IC_6 15.5
86	C_6 15.59
100	IC_7 17.2
10	C_7 17.49
4	C_8 19.41
9	$C_2^=$ 9.84
42	$C_3^=$ 9.67

MISC MW	gals/mol
**	CO_2 8.47
	H_2S 5.18
	N_2 4.16
	H_2 3.38

FIG 4: PLAN VIEW OF TANK LINER

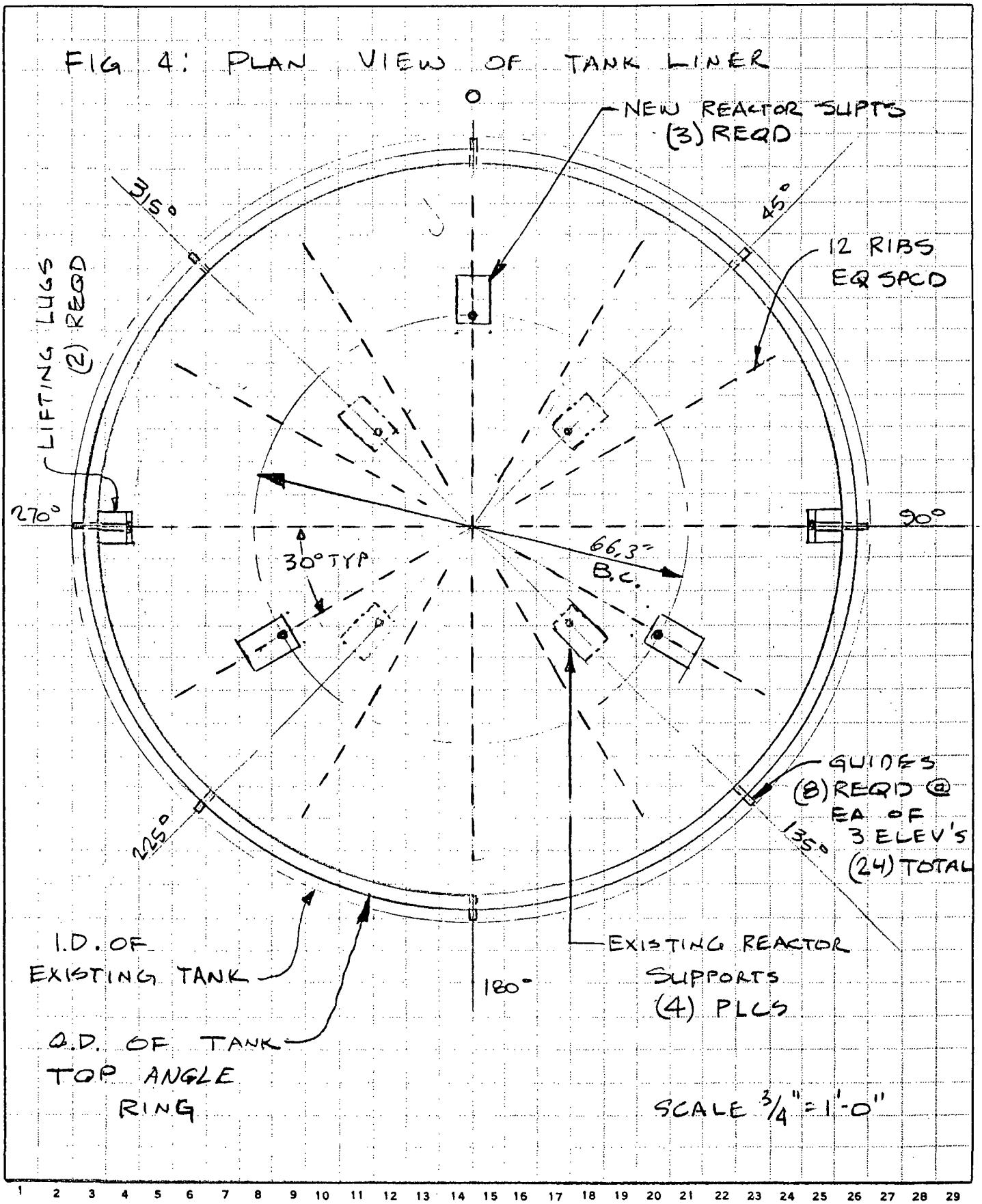

MW		gals/mol
16	C_1	8.40
30	C_2	9.87
44	C_3	10.44
58	IC_4	12.40
58	C_4	11.95
72	IC_5	13.66
72	C_5	13.74
86	IC_6	15.5
86	C_6	15.59
100	IC_7	17.2
30	C_7	17.49
14	C_8	19.41
28	$C_2^=$	9.64
42	$C_3^=$	9.87

MISC		
MW		gals/mol
44	CO_2	8.47
	H_2S	5.18
	N_2	4.16
	H_2	3.36

6.0 TANK VOLUME (FULL)

$90\frac{3}{4}$" I.D. X $25'-1\frac{1}{4}$" LG = 1,127 ft^3

1127 ft^3 = 8435 GALLONS = 70,324 lb WATER

7.0 TANK WEIGHTS (EST @ .098 #/in³)

SHELL: $\frac{1}{4}$" PL X $90\frac{3}{4}$ I.D. X 205" = 1432
$\frac{3}{8}$" PL X $90\frac{3}{4}$ I.D. X 96" = 1006 } 2438

BTM HEAD: 1" PL X $78\frac{3}{4}$" ϕ = 460 #
$\frac{1}{4}$" PL X $91\frac{1}{4}$" O.D. X $78\frac{3}{4}$" = 55 #

TOP ⌟ RING:

(1) $\frac{1}{4}$ PL $91\frac{1}{4}$" I.D. X $95\frac{1}{4}$ OD = 10 #
(1) $\frac{1}{4}$ PL $91\frac{1}{4}$" I.D. X 2" LG = 11 #

GUIDE PLATES: = 30 #

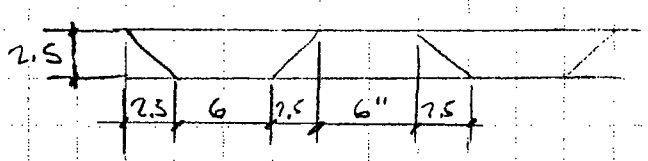

RIBS: (12) 1" X 2" X 34" LG = 80 #

MISC: LIFT LUGS = 15 #
SUPT PLS

3099 #

MW	gals/mol	
16	C_1	8.40
30	C_2	9.67
44	C_3	10.44
58	IC_4	12.40
58	C_4	11.95
72	IC_5	13.88
72	C_5	13.74
86	IC_6	15.5
86	C_6	15.59
100	IC_7	17.2
10	C_7	17.49
14	C_8	19.41
28	$C_2^=$	9.64
42	$C_3^=$	9.67

WEIGHTS (CONT.)

FAB WT: 3099 X 1.06 = 3285 #
(ADD 6% FOR FE OVERAGES
WELDING, ETC.)

TEST WT:
FAB WT : 3285 #
+ WATER : 70,324 = 73,609 #

OPER WT:
FAB WT: 3285 #
+ REACTOR : 3500 #
+ WATER 67524 # = 74,309 #

ASSUME REACTOR DISPLACES
ABOUT 45 ft^3 OF WATER
45 X 62.4 = 2800 #
70324 - 2800 = 67524

MISC		
MW	gals/mol	
44	CO_2	8.47
	H_2S	5.18
	N_2	4.16
	H_2	5.58

MW	gals/mol
16	C_1 8.40
30	C_2 9.07
44	C_3 10.44
58	IC_4 12.40
58	C_4 11.98
72	IC_5 13.68
72	C_5 13.74
84	IC_6 15.5
86	C_6 15.59
100	IC_7 17.2
90	C_7 17.49
14	C_8 19.41
28	$C_2^=$ 9.64
42	$C_3^=$ 9.87

8.0 SHELL THICKNESS REQD FOR INT. PRESSURE

$$t = \frac{PR}{SE - .6P} = \frac{10.83(45.375)}{7500(1.0) - 6.5} = .065''$$ USE 1/4" min thk

$S_{150°} = 7500$ PSI FOR 6061-T4 ALUM
$P = 10.83$ PSI
$R = 45.375$
$E = 1.0$

MAXIMUM ALLOWABLE EXTERNAL PRESSURE

$L = 300''$
$D_o = 91\frac{1}{4}''$
$t = .25$

$L/D_o = 3.29$

$D_o/t = 365$

FROM ASME SECT VIII, DIV 1 FIG UGO 28.0

FACTOR $A = .00006$

MISC		
MW	gals/mol	
44	CO_2	6.47
	H_2S	5.18
	N_2	4.18
	H_2	5.38

FOR VALUES TO THE LEFT OF THE APPLICABLE MATL/TEMP LINE

ALLOWABLE EXTERNAL PRESSURE, P_a, PSI

$$P_a = \frac{2AE}{3(D_o/t)} = \frac{2(.00006)\,9.8\times10^6}{3(365)} = 1.07 \text{ PSI}$$

9.0 SEISMIC DESIGN

THE SEISMIC DESIGN WILL BE COMPUTED IN TWO WAYS;

1) FOR THE TANK SHELL THE TANK WILL BE DESIGNED AS AN OPEN TOPPED TANK IN ACCORDANCE WITH APP 'E' OF API-650. THE SEISMIC ZONE FACTORS OF API-650 WILL BE CONVERTED TO ACCOMMODATE UBC SEISMIC ZONES. THIS WILL INSURE THAT BOTH CODES ARE MET.

THE TANK SHELL WILL BE ASSUMED TO BE UNANCHORED BUT GUIDED. THE TANK GUIDES WILL TRANSMIT THE HORIZONTAL FORCES (BASE SHEAR) TO THE OUTER SHELL WALL.

SINCE THIS PROCEDURE IS BASED ON FREE STANDING STRUCTURES IT WILL BE CONSERVATIVE FOR THIS APPLICATION.

2) THE TANK BOTTOM WILL BE DESIGNED TO TAKE THE DEAD WT LOAD OF THE REACTOR PLUS CONTENTS AND A SEISMIC REACTION LOAD FROM THE REACTOR SUPPORT STRUCTURE.

FORM E-050 1-6-86
PRINTED IN U.S.A.

MW		gals/mol
16	C_1	8.40
30	C_2	9.87
44	C_3	10.44
58	IC_4	12.40
58	C_4	11.98
72	IC_5	13.88
72	C_5	13.74
86	IC_6	15.5
86	C_6	15.59
100	IC_7	17.2
00	C_7	17.49
.14	C_8	19.41
28	$C_2^=$	9.64
42	$C_3^=$	9.87

MISC		
MW		gals/mol
4	CO_2	6.47
4	H_2S	5.18
8	N_2	4.16
2	H_2	3.38

SEISMIC DESIGN (CONT)

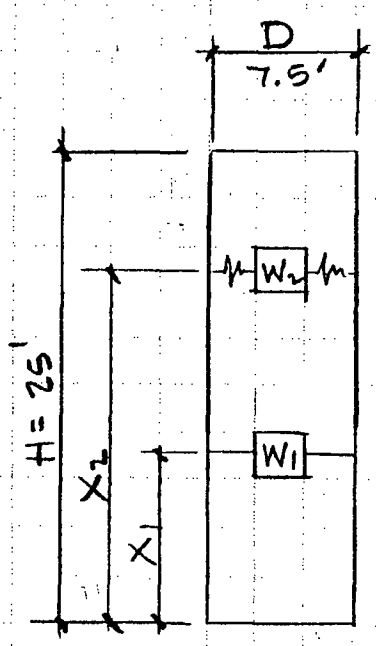

TO CONVERT API SEISMIC FACTOR Z TO UBC SEISMIC FACTOR;

$$Z' = \frac{K(CS)Z}{C_1}$$

WHERE;

$K = 2.0$
$CS = .14$ MAX
$C_1 = .24$
$Z = .1875$ ZONE 1

∴ FOR ZONE 1

$$Z' = \frac{2.0(.14).1875}{.24} = .2187$$

I = OCCUPANCY Importance factor = 1.0
C_1 = lateral E.Q. Coefficient = .24

$D/H = 7.5/25 = .3$ ∴

RATIOS		
W_1/W_T	= .925	FIG E-2
W_2/W_T	= .075	FIG E-2
X_1/H	= .475	FIG E-3
X_2/H	= .9	FIG E-3

SEISMIC DESIGN (CONT)

MW	gals/mol	
16	C_1	8.40
30	C_2	9.67
44	C_3	10.44
58	IC_4	12.40
58	C_4	11.93
72	IC_5	13.88
72	C_5	13.74
86	IC_6	15.5
86	C_6	18.59
100	IC_7	17.2
100	C_7	17.49
114	C_8	19.41
128	C_9*	9.64
142	C_{10}*	9.87

S = SITE AMPLIFICATION FACTOR = 1.0

K = .56

$T = K\sqrt{D} = .56\sqrt{17.5} = 1.53$ secs

$C_2 = \frac{.3\,S}{T} = \frac{.3}{1.53} = .196$

$W_S = 2438$ #

$W_T = 73{,}609$ #

$W_1 = .925\,(73{,}609) = 68{,}088$ #

$W_2 = .075\,(73{,}609) = 5{,}521$ #

$X_1 = .475\,(25) = 11.875'$

$X_2 = .9\,(25) = 22.5'$

$X_S = 12.5'$ (DISTANCE TO C.G. OF SHELL)

MW	MISC gals/mol	
44	CO_2	6.47
	H_2S	5.18
	N_2	4.16
	H_2	3.38

OVERTURNING MOMENT, M, FT-LBS

$M = ZI\,(C_1 W_S X_S + C_1 W_1 X_1 + C_2 W_2 X_2)$

$= .2187\,(1.0)\,[225{,}712] = 49{,}363$ FT-LBS

$.24\,(2438)\,12.5 = 7314$
$.24\,(68{,}088)\,11.875' = 194050$
$.196\,(5{,}521)\,22.5' = 24348$
$225{,}712$

BASE SHEAR, $V = 2104 + 67760 + 5494 = 75{,}358$ #

SEISMIC DESIGN (CONT)

W	gals/mol
	C_1 8.40
	C_2 9.87
44	C_3 10.44
58	IC_4 12.40
	C_4 11.95
	IC_5 13.88
	C_5 13.74
72	IC_6 15.5
86	C_6 15.59
100	IC_7 17.2
	C_7 17.49
	C_8 19.41
	$C_3^=$ 9.84
42	$C_3^=$ 9.87

MISC	
MW	gals/mol
44	CO_2 8.47
	H_2S 5.18
	N_2 4.16
	H_2 3.38

SEISMIC UPLIFT, W_U, lb/FT-CIRC

$$W_U = \frac{4M}{\pi D^2} = \frac{4(49{,}363)}{\pi(7.6^2)} = 1088 \ \#/\text{FT-CIRC}$$

WEIGHTS RESISTING UPLIFT

FROM SHELL, $W_T = \frac{W_S}{\pi D} = \frac{2438}{\pi(7.6)} = 102 \ \#/\text{FT}$

FROM LIQUID, $W_L = 1.25\,GHD = 1.25(1.0)\,25(7.6) = 238 \ \#/\text{FT}$

where G = Sp Grav of contents

FROM REACTOR, $W_R = \frac{3500}{\pi D} = 148 \ \#/\text{FT}$

$\Sigma W = 102 + 238 + 150 = 490 \ \#/\text{FT}$

SHELL COMPRESSION, f_a (BOTTOM COURSE ONLY!)

$b = W_t + W_U = 102 + 1078 = 1180 \ \#/\text{FT CIRC}$

$$f_a = \frac{b}{12t} = \frac{1180}{12(.25)} = 393 \text{ psi}$$

ALLOWABLE SHELL COMPRESSION, F_a

PER API

$$F_a = \frac{10^6 t}{2.5D} + 600\sqrt{GH} = \frac{10^6(.25)}{2.5(7.6)} + 600\sqrt{1.0(25)}$$

$= 16{,}158$ but not greater than $.5F_y$

$.5F_y = .5(16{,}000) = 8000$ psi

MW		gals/mol
16	C_1	8.40
30	C_2	9.47
44	C_3	10.44
58	IC_4	12.40
58	C_4	11.95
72	IC_5	13.88
72	C_5	13.74
86	IC_6	15.5
86	C_6	15.59
100	IC_7	17.2
10	C_7	17.49
14	C_8	19.41
18	$C_2^=$	9.64
42	$C_3^=$	9.67

ALLOWABLE LONG COMPRESSION PER ASME

REF: UG-23

$$B = \frac{AE}{2} = \frac{.00006\ (9.8 \times 10^6)}{2} = 294 \text{ PSI}$$

IF THE BOTTOM COURSE WERE INCREASED TO 3/8" THK THAN THE LONG COMPRESSION BECOMES

$$f_a = \frac{D}{12t} = \frac{1166}{12(.375)} = 259 < 294 \text{ OK}$$

∴ INCREASE BTM 8' OF SHELL TO 3/8" THK

10.0 TANK BOTTOM DESIGN

ASSUME A .2G FORCE APPLIED TO REACTOR FOR SEISMIC OCCURANCE

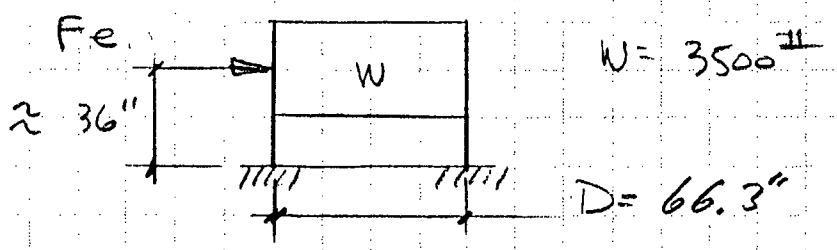

$$F_e = .2(3500) = 700^{\#}$$

$$M_t = 36\ (700) = 25200 \text{ in-lbs}$$

MISC		
MW		gals/mol
	CO_2	8.47
	H_2S	5.18
	N_2	4.16
	H_2	3.98

FORM E-050 1-6-86
PRINTED IN U.S.A.

MW		gals/mol
16	C_1	8.40
30	C_2	9.67
44	C_3	10.44
58	IC_4	12.40
58	C_4	11.95
72	IC_5	13.88
72	C_5	13.74
86	IC_6	15.5
86	C_6	15.59
100	IC_7	17.2
100	C_7	17.49
114	C_8	19.41
78	$C_3^=$	9.64
42	$C_3^=$	9.67

MISC		
MW		gals/mol
44	CO_2	6.47
	H_2S	5.18
	N_2	4.16
	H_2	3.38

TANK BTM DESIGN (CONT)

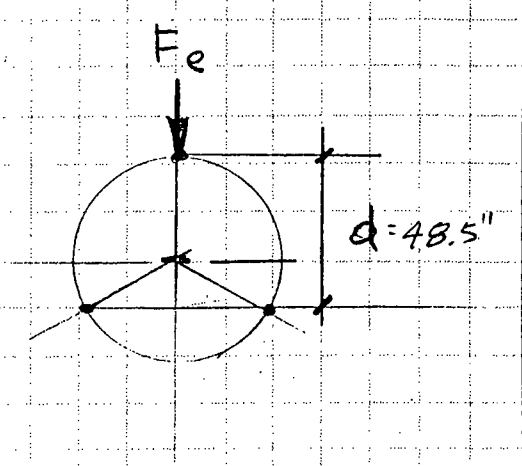

MAX COMP. FORCE, f

$$f = \frac{W}{N} - \frac{4 M_t}{N d}$$

$$= \frac{3500}{3} - \frac{4(25{,}200)}{3(48.5)}$$

$$= 1859\#$$ CONCENTRATED LOAD (MAX)

UNIFORM LOAD, p, PSI

$$p = \frac{F}{\pi R^2} = \frac{70{,}324}{\pi (44.75^2)} = 11.18 \text{ PSI}$$

where F = TOTAL WT OF WATER = 70324 #

Since the tank bottom rests on the ribs and the ribs in turn on the bottom assume a 1" wide section of the tank bottom acting as a beam, uniformly loaded and both edges simply supported

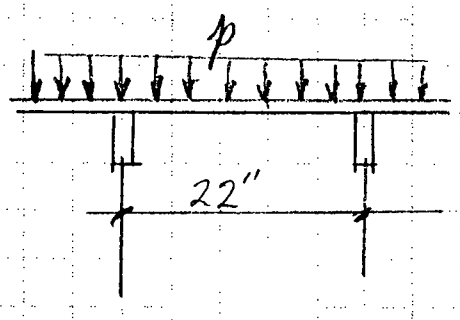

max distance

MW		gals/mol
16	C_1	8.40
30	C_2	9.87
44	C_3	10.44
58	IC_4	12.40
58	C_4	11.95
72	IC_5	13.88
72	C_5	13.74
68	IC_6	15.5
86	C_6	15.59
100	IC_7	17.2
30	C_7	17.49
14	C_8	19.41
78	$C_2^=$	9.64
42	$C_3^=$	9.87

MISC		
MW		gals/mol
**	CO_2	6.47
	H_2S	5.18
	N_2	4.16
	H_2	3.38

TANK BTM DESIGN (CONT)

MAX MOMENT; $M = \frac{w l^2}{8} = \frac{10(22^2)}{8} = 605$ in-lbs

STRESS, $f_b = \frac{M}{Z} = 6(605) = 3630$ PSI OK

where $Z = \frac{bh^2}{6} = \frac{1.0(1^2)}{6} = \frac{1}{6}$

ALLOW STRESS bending $= .6 F_y = .6(16) = 9600$ PSI

Assuming a uniformly loaded square section

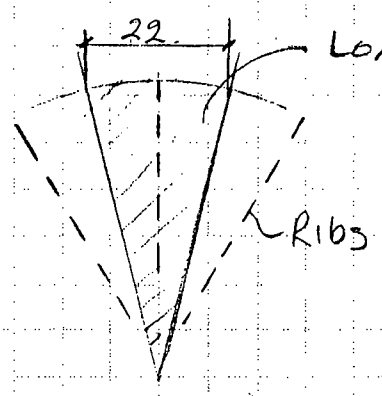

LOAD AREA = 30° SECTION
= 398 in²
= 20 x 20

UTILIZING ROARK, TABLE 26; CASE 1

$a/b = 1$ ∴ $\beta = .2874$
$\alpha = .0444$
$\gamma = .420$

Max Stress $\sigma = \frac{\beta q b^2}{t^2} = \frac{.2874(10)\ 20^2}{1^2} = 1150$ psi

MAX Deflection $y = \frac{-\alpha q b^4}{E t^3} = \frac{-.0444(10)\ 20^4}{9.8 \times 10^6\ (1^3)} = .0072$"

MW		gals/mol
	C_1	8.40
30	C_2	9.87
44	C_3	10.44
58	IC_4	12.40
	C_4	11.95
	IC_5	13.88
	C_5	15.74
86	IC_6	15.5
86	C_6	15.59
100	IC_7	17.2
	C_7	17.49
	C_8	19.41
	$C_2^=$	9.66
42	$C_3^=$	9.87

MISC		
MW		gals/mol
	CO_2	8.47
	H_2S	5.18
	N_2	4.18
	H_2	3.36

TANK BTM. DESIGN (CONT)

FOR THE CONCENTRATED LOAD THERE IS A RIB DIRECTLY UNDER EACH ANCHOR PT OF THE REACTOR. THIS LOAD WOULD BE TRANSMITTED DIRECTLY TO THE FOUNDATION. THE RIB/TANK BTM COMPOSITE WOULD BE IN DIRECT COMPRESSION THERE...

$$\sigma_c = \frac{F}{A} = \frac{1859^{\#}}{3 in^2} = 620 \text{ PSI} \quad \text{OK}$$

THICKNESS REQD FOR THE FLANGED ONLY PORTION OF HEAD;

MAX Long. Load, $f_1 = 1180$ #/FT (from p.14)

$$f = \frac{1180}{12} = 98 \text{ lb/in Compression}$$

Equivalent pressure (@ 45°, $D_1 = 86''$)

$$P_1 = P + \frac{4f}{D_1} = 10.83 + \frac{4(98)}{87\frac{1}{4}} = 15.32 \text{ PSI}$$

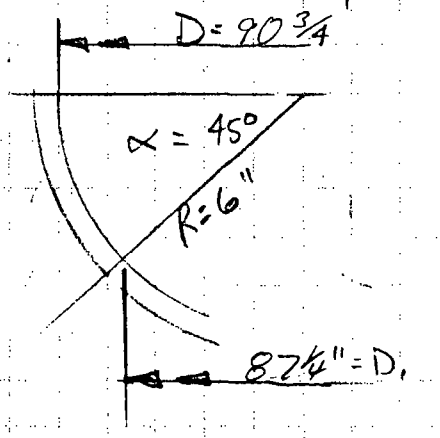

$$L_1 = \frac{D_1}{2\cos\alpha} = \frac{87\frac{1}{4}}{2\cos 45^\circ} = 61.7$$

$$m = .25\left(3 + \sqrt{\frac{L_1}{R}}\right)$$

$$= .25\left(3 + \sqrt{\frac{61.7}{90\frac{3}{4}}}\right) =$$

$$= .96$$

MW	gals/mol
16	C_1 8.40
30	C_2 9.67
44	C_3 10.44
58	IC_4 12.40
58	C_4 11.98
72	IC_5 13.88
72	C_5 13.74
86	IC_6 15.5
86	C_6 15.59
100	IC_7 17.2
30	C_7 17.49
4	C_8 19.41
8	C_9^+ 9.64
42	C_3^+ 9.67

TANK BOTTOM (CONT)

Req'd thickness of knuckle

$$t_{rk} = \frac{P_1 L_1 M}{2SE - .2P} = \frac{15.46(61.7)\,.96}{2(7500)1.0 - .2(15.46)} = .061''$$

USE 3/8" THK

CIRCUMFERENTIAL STRESS IN KNUCKLE @ D_1

REF (4) pp 68,69

Compression w/ LOADS ....

$$\sigma_c = \frac{PL_1}{t} - \frac{P_1 L_1}{t}\left[\frac{L_1}{2R}\right] =$$

$$= \frac{10.83(61.7)}{.375} - \frac{15.46(61.7)}{.375}\left[\frac{61.7}{2(6)}\right] = (-)11{,}297 \text{ PSI}$$

Compression w/o LOADS ...

$$\sigma_c = \frac{P L_1}{t}\left(1 - \frac{L_1}{2R}\right) = \frac{10.83(61.7)}{.375}\left(1 - \frac{61.7}{12}\right) = (-)7380 \text{ PSI}$$

MISC MW	gals/mol
44	CO_2 8.47
	H_2S 5.18
	N_2 5.16
	H_2 3.38

FAILURE WOULD OCCUR BY LOCAL YIELDING RATHER THAN BUCKLING ∴ A HIGHER ALLOWABLE STRESS IS WARRANTED. BEDNAR RECOMMENDS THE LESSER OF 2SE OR F_y.

$\sigma_c < 2SE < F_y$ ∴ STRESS IS ACCEPTABLE

TANK BTM (CONT)

IN THE EVENT THE FOUNDATION OF THE TANK BOTTOM IS NOT LEVEL THERE IS A CHANCE THAT THE RIBS WILL NOT REST UNIFORMLY ON THE FOUNDATION OR PREVIOUS TANK LINER. THIS COULD RESULT IN SOME BENDING IN THE RIBS WELDED TO THE UNDERSIDE OF THE TANK. AS AN APPROXIMATION OF BENDING A UNIFORM LOAD IS ASSUMED ACROSS THE RIB AS A BEAM

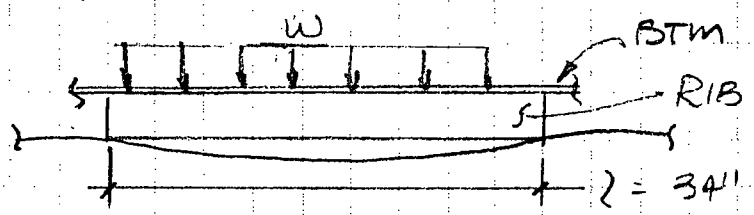

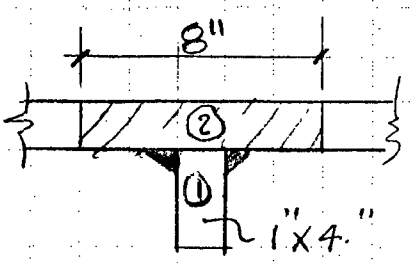

	A	Y	AY	AY^2	I
①	4	1	4	4	.6666
②	8	2.5	20	50	.6666
Σ	12		24	54	1.33

$$C = \frac{\Sigma AY}{\Sigma A} = \frac{24}{12} = 2.0''$$

$$I = \Sigma AY^2 + \Sigma I - C\Sigma AY$$
$$= 54 + 1.33 - 2.0(24) = 7.33 \text{ in}^4$$

$$w = \frac{Ap}{\ell} = \frac{298 \text{ in}^2 (10 \text{ lb/in}^2)}{34''} = 88 \text{ \#/in}$$

$$M = \frac{w\ell^2}{8} = \frac{88(34^2)}{8} = 12{,}716 \text{ in-lbs}$$

$$\sigma_b = \frac{Mc}{I} = \frac{12{,}716(2.4)}{7.33} = 4163 \text{ psi OK}$$

FORM E-050 1-6-86
PRINTED IN U.S.A.

11.0 TOP ⊥ RING

SINCE THERE IS NO ROOF CONNECTED TO THE TOP OF THE TANK AND NO WIND LOAD THE ONLY LOADING ON THE TOP RING IS INDUCED DURING ERECTION BY THE LIFTING LUGS.

DEAD WT OF TANK = 2900#

IMPACT FACTOR = 1.5

LOAD PER LIFT LUG = 1.5 (3285) ÷ 2 = 2464 #

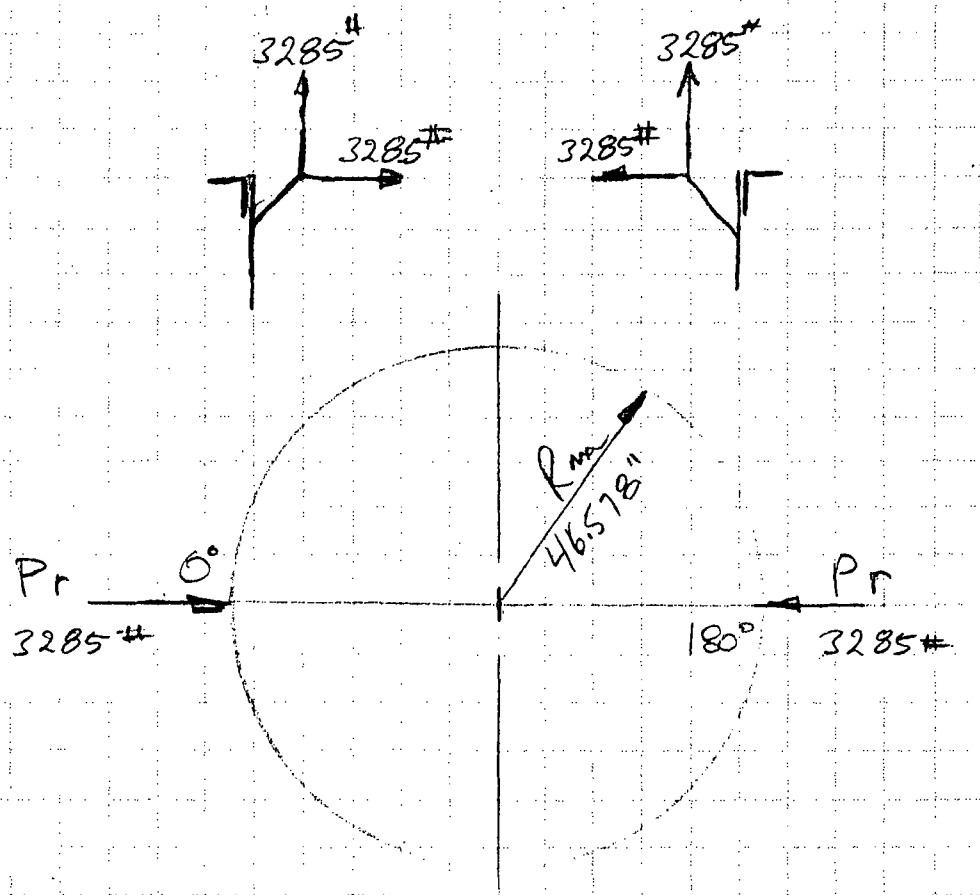

RING LOADING

FORM E-050 1-6-86
PRINTED IN U.S.A.

MW		gals/mol
16	C_1	6.40
30	C_2	9.87
44	C_3	10.44
58	IC_4	12.40
58	C_4	11.95
72	IC_5	13.88
72	C_5	13.74
86	IC_6	15.5
86	C_6	15.59
100	IC_7	17.2
100	C_7	17.49
114	C_8	19.41
128	C_9^+	9.84
142	C_{10}^+	9.67

MISC MW		gals/mol
	CO_2	8.47
	H_2S	5.18
	N_2	4.16
	H_2	3.38

TOP RING (CONT)

PER REF (5) THE INTERNAL BENDING MOMENT DUE TO RADIAL LOADS IS . . .

$$M = \Sigma (K_r P_r) R_m =$$

K_r @ 0° = −.2387 (2464) = −588
K_r @ 180° = +.0796 (2464) = +196

−392

$$M = \Sigma (K_r P_r) R_m = -392\ (47.2) = (-)18{,}500 \text{ in-lbs}$$

PROPERTIES OF TOP RING . . .

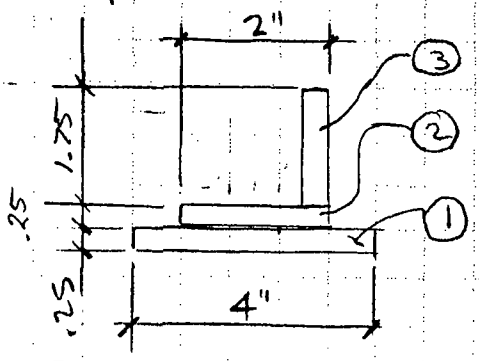

EQUIVALENT SECTION

	A	Y	AY	AY^2	I
1	1	.125	.125	.015	.005
2	.5	.375	.1875	.0703	.0026
3	.4375	1.375	.6016	.8271	.1117
Σ	1.9375		1.1642	.9124	.1195

$$C = \frac{\Sigma AY}{\Sigma A} = \frac{1.1642}{1.9375} = .6009$$

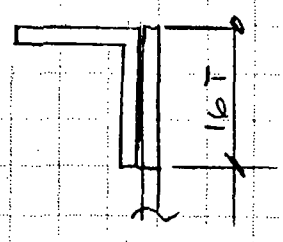

ACTUAL TOP SECT

$$I = \Sigma AY^2 + \Sigma I - C\,\Sigma AY$$
$$= .8271 + .1195 - .6009(.6016)$$
$$= .5851 \text{ IN}^4$$

$$\sigma_b = \frac{MC}{I} = \frac{18500\,(.6009)}{.5851} = 18{,}999 \text{ PSI}$$

$$F_b = .6 F_y = .6(16) = 9600 \text{ PSI}$$

MUST USE SPREADER TO LIFT

FORM E-050 1-6-86
PRINTED IN U.S.A.

MW	gals/mol
1	C_1 8.40
30	C_2 9.67
44	C_3 10.44
58	IC_4 12.40
	C_4 11.95
	IC_5 13.88
	C_5 13.74
68	IC_6 15.5
86	C_6 15.59
100	IC_7 17.2
	C_7 17.49
	C_8 19.41
	C_9^+ 9.64
42	$C_3^=$ 9.67

12.0 LIFTING LUGS

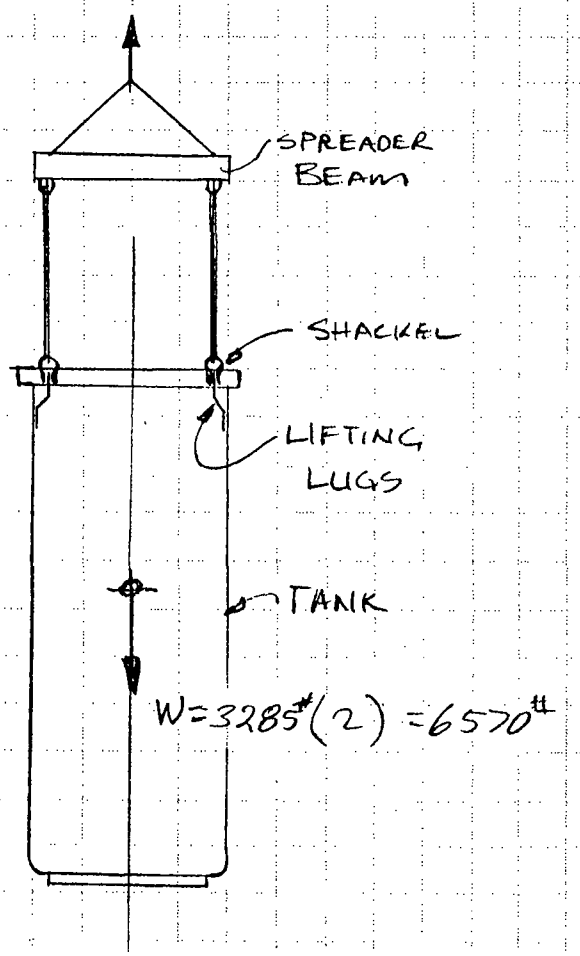

LIFTING PLAN

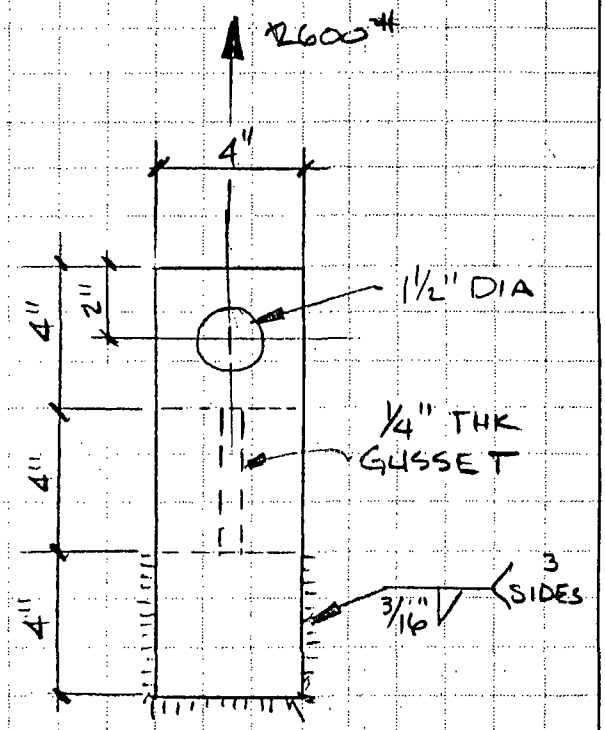

MW	MISC gals/mol
	CO_2 8.47
	H_2S 5.18
	N_2 4.18
	H_2 3.38

NOTE: THE DESIGN OF THE TOP ⊥ RING MAKES IT MANDATORY THAT A SPREADER BEAM BE USED IN LIFTING. TO NOT DO SO COULD DAMAGE THE TANK RIM!

WELDS

ALLOW STRESS FOR FILLET WELDS IN SHEAR

Assume 1/5 OF Tensile strength = .2(30 KSI) = 6 KSI

∴ 3/16" FILLET HAS SHEAR AREA/INCH = .1875 in²

FORM E-050 1-6-86
PRINTED IN U.S.A.

LIFTING LUGS (CONT)

∴ THE ALLOWABLE LOAD / INCH OF WELD

6 KSI X .1875 in^2 = 1.125 KIPS

EACH LUG HAS 12" OF 3/16" WELD

∴ 12 (1.125) = 13.5 KIPS > 2.6 OK

SHEAR AREA

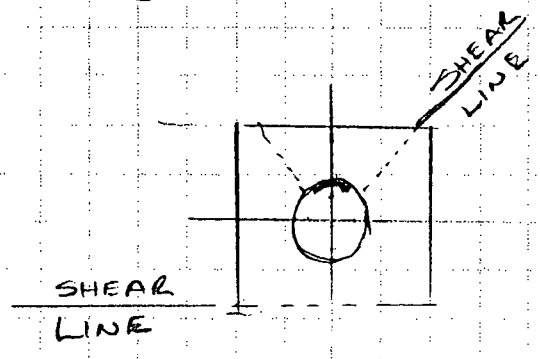

SHEAR AREA:

Lesser of

.25 x 4 = 1 in^2

2(.25) 1.25 = .625 in^2

$$\tau = \frac{F}{A} = \frac{3285}{.625} = 5256 \text{ PSI}$$

ALLOW SHEAR = .4 Fy = .4 (16000) = 6400

∴ THE DESIGN IS ACCEPTABLE PROVIDING THE SHACKEL PIN IS AT LEAST 1" DIA.

FORM E-050 1-6-86
PRINTED IN U.S.A.

13.0 THERMAL EXPANSION

ALUMINUM 6061 $= 13.5 \times 10^{-6}$ in/in °F

TANK DIA. = 90"

TANK PERIMETER = 282.74"

It is assumed the size of the existing tank will not very in size do to thermal expansion because of the concrete backing. The new tank liner will expand from room temperature, ≈ 70°F to a maximum of 150°F.

$$(282.74)\text{in}\,(150-70)°F\ 13.5\times10^{-6}\ \frac{\text{in}}{\text{in °F}} = .31\text{ in}$$

Causing a diameter change of:

$$((282.74+.31)/\pi) - (90) = .10\text{ in}$$

Use a gap of 1/8" between the guides of the tank liner and the existing tank.

22-141 50 SHEETS
22-142 100 SHEETS
22-144 200 SHEETS
AMPAD

REACTOR LEVELING STAND

14.0

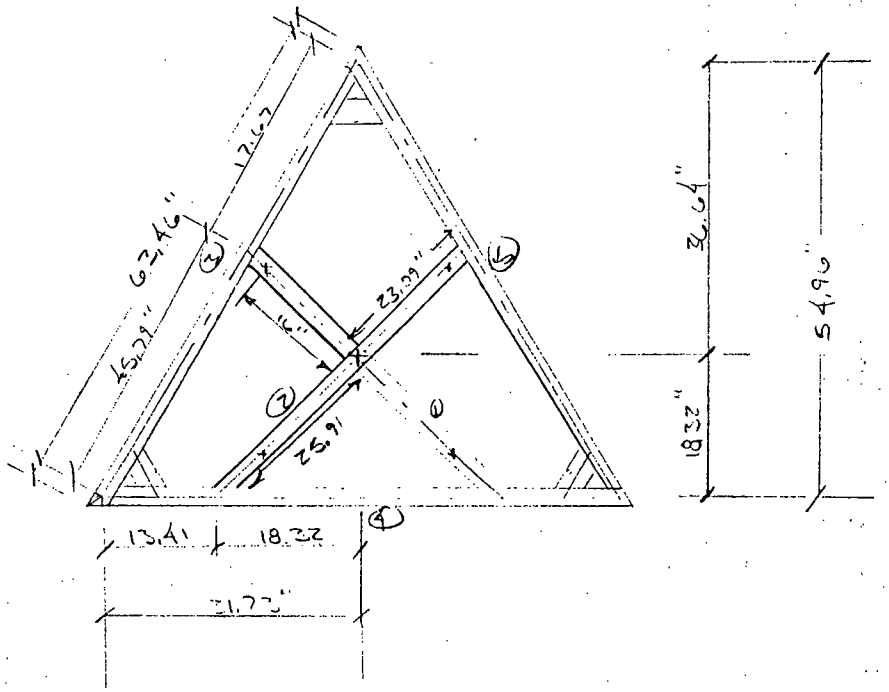

BEAM #2

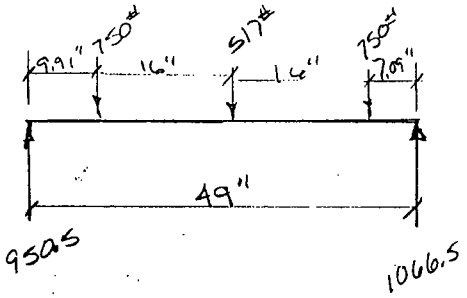

$M_{max} = 12,627.5$ "#

BEAM #3

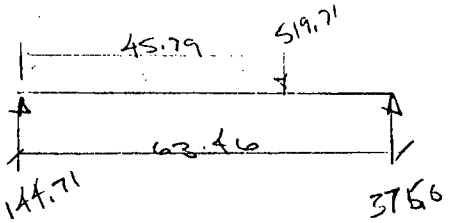

$M_{max} = 6626$ "#

BEAM #4

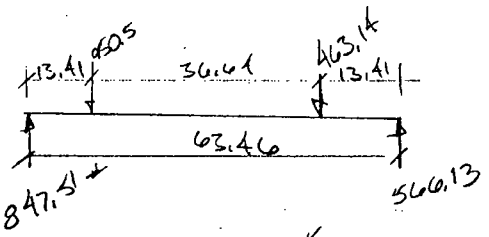

$M_{max} = 11,365$ "#

BM #5

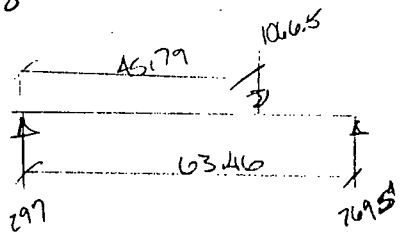

$M_{max} = 13,598$ "#

14.0 CONT.

2x3 BAR

$S = \frac{2 \cdot 3^2}{6} = 3 \text{ in}^3$

$f_b = \frac{13,598}{3} = 4533 \text{ psi}$

$F_b = 7500 \text{ psi}$

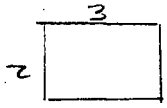

$S = \frac{3 \cdot 2^2}{6} = 2 \text{ in}^3$

$f_b = \frac{13,598}{2} = 6799 \text{ psi} < F_b$

CROSS MEMBER

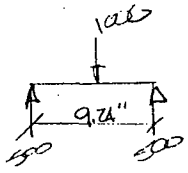

$M = 1620 \text{ "\#}$

WELDS

ALLOW STRESS FOR FILLET WELDS IN SHEAR

ASSUME 1/5 OF TENSILE STRENGTH = .2(30ksi) = 6ks

3/16" Fillet has shear area/inch = .1875 in²

∴ Allow Load per inch of WELD

6ksi × .1875 in² = 1.125 k.

EACH CORNER HAS 10" OF 3/16" WELD

∴ 10 × (1.125) = 11.25 K > 1 K

ADJUSTING BOLTS

FROM MARKS STANDARD HANDBOOK FOR MECH. ENG.

SECTION 8, TABLE 31 FOR THREAD LOAD

USE 1" ALUMINUM BOLT.

14.0 CONT.

FROM 10.0 OF THESE CALCULATIONS:

$F_e = 700^{\#}$ SIDE LOAD DUE TO SEISMIC

ASSUME A MAXIMUM EXTENSION OF ADJUSTING BOLT OF $3\frac{1}{2}''$ INCLUDING $1\frac{1}{2}''$ OF NON ADJUSTABLE SPACE.

ALLOW STRESS BENDING $= .6\ F_y = 21{,}000$ psi

USE 1" BOLT $(F_y = 35{,}000)$

$D = 0.8444''$ — (MIN. BOLT DIA.)

$S = .098175\ D^3 = 0.0591$

$M = 3.5 \times \left(\frac{700}{3}\right) = 817$ in-lb

(3 EXTENSION BOLTS TO BE USED)

$T = \frac{M}{S} = 13{,}822$ psi

USE 1" ALUMINUM BOLTS

22-141 50 SHEETS
22-142 100 SHEETS
22-144 200 SHEETS
AMPAD

15.0 PUMP TUBES

6" PUMP TUBE UNDER EXTERNAL PRESSURE

$L = 240"$
$D_o = 6"$
$t = .125$

$\frac{L}{D_o} = 40$ $\frac{D_o}{t} = 48$

FROM ASME SECT VIII, DIV. I FIG UGO 28.0

$A = .0005$

$B = 2500$

$$P = \frac{4B}{3\left(\frac{D_o}{t}\right)} = 69 \text{ psi}$$

OK

3" PUMP TUBE UNDER EXTERNAL PRESSURE

$L = 60"$
$D_o = 3"$
$t = .125$

$\frac{L}{D_o} = 20$ $\frac{D_o}{t} = 24$

$A = .002$

$B = 8500$

$P = 472 \text{ psi}$

PER ASME UG-36 (C) - NOZZELS 3" OR LESS IN HEADS 3/8" THICK OR LESS DO NOT REQUIRE REINFORCEMENT.

22-141 50 SHEETS
22-142 100 SHEETS
22-144 200 SHEETS
AMPAD