Irradiator Technology

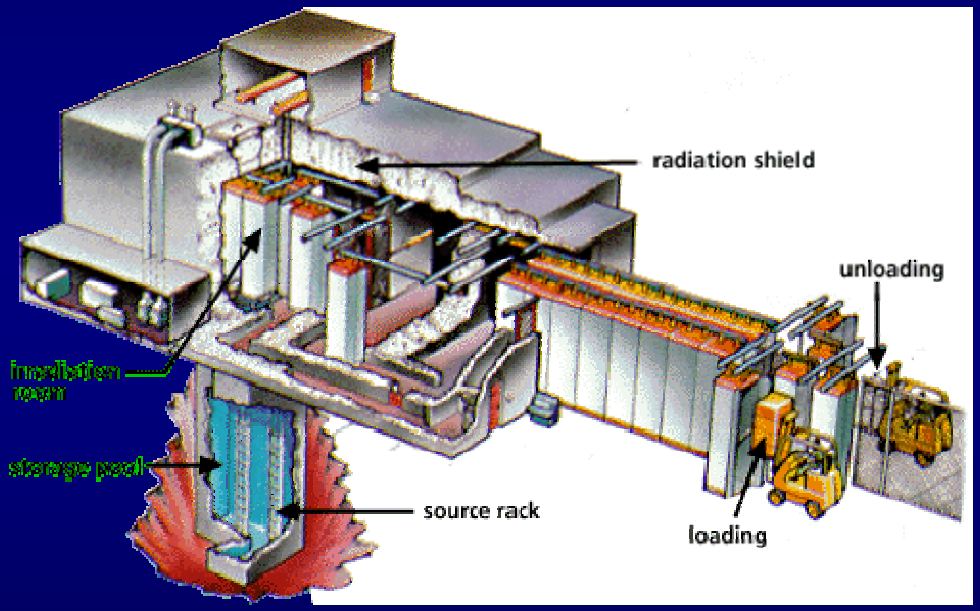

Irradiator Safety & Licensing

Irradiator Technology
10 CFR Part 36

- Topics
- 10 CFR 36 Irradiators
  - Panoramic irradiators
  - Dry or wet source storage or underwater irradiators
  - >500 rads/h at one meter
- Overview: Uses and Types
- Regulations & Safety Inspections
- Licensing Highlights

Irradiator Uses

- Sterilization
  - medical products
    - Blood and urine collection
    - Syringes, tubing
    - Bandages, gloves, swabs
  - pharmaceutical products
    - Ointments, eye droppers, drug delivery pump
- Preservation of foodstuffs (spices, etc…)
- Synthesis of polymers (engineered flooring)

Used in more than 160 gamma irradiation facilities

Irradiator Categories

Gamma Irradiation Facilities

Irradiators can be wet or dry, large or small - they are divided into categories depending on how the source is stored and used

- Category I
- Category II
- Category III
- Category IV

The activity of the source in an irradiator can range from Curies to MegaCuries or more

Category I

Self-Contained (Self-Shielded) Dry Source Storage Irradiators

Sealed source(s) completely enclosed in a self-shielded dry container

Category II

Panoramic Dry Source Storage Irradiator

Sealed sources stored in a dry shielded container and remotely operated to expose product

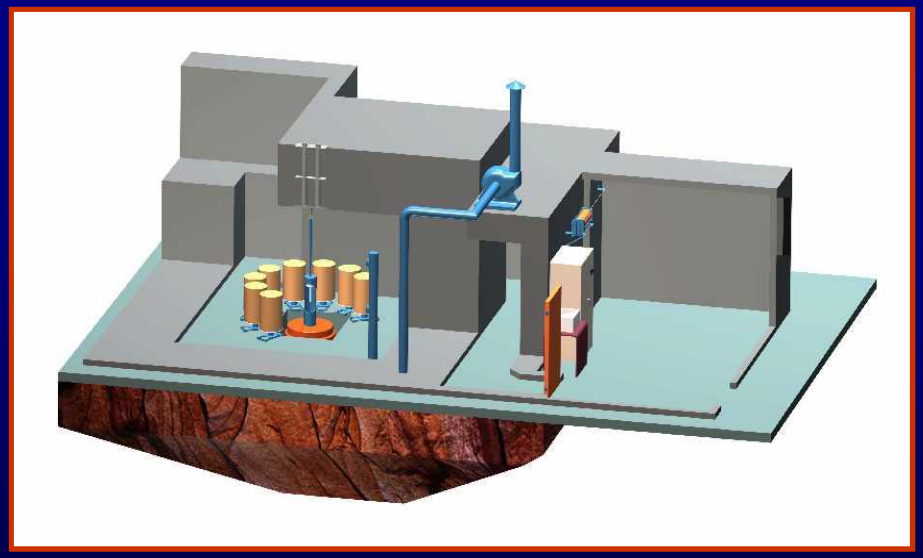

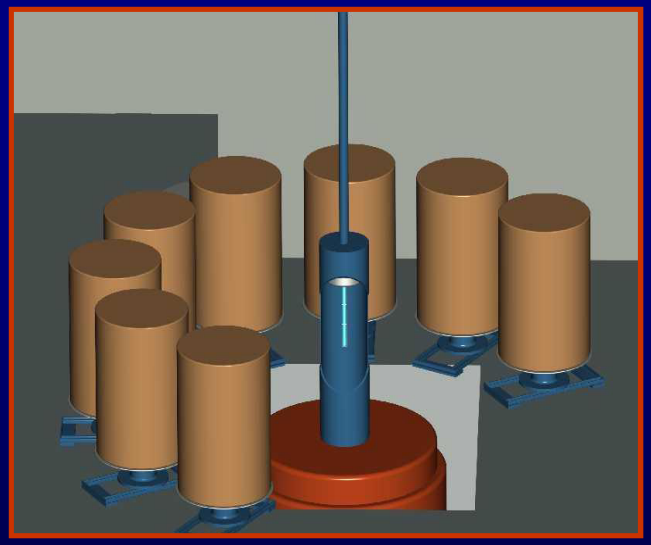

Category III

Self-Contained

Wet Source Storage Irradiator

Sealed source contained in a water filled storage pool and product moves to sources

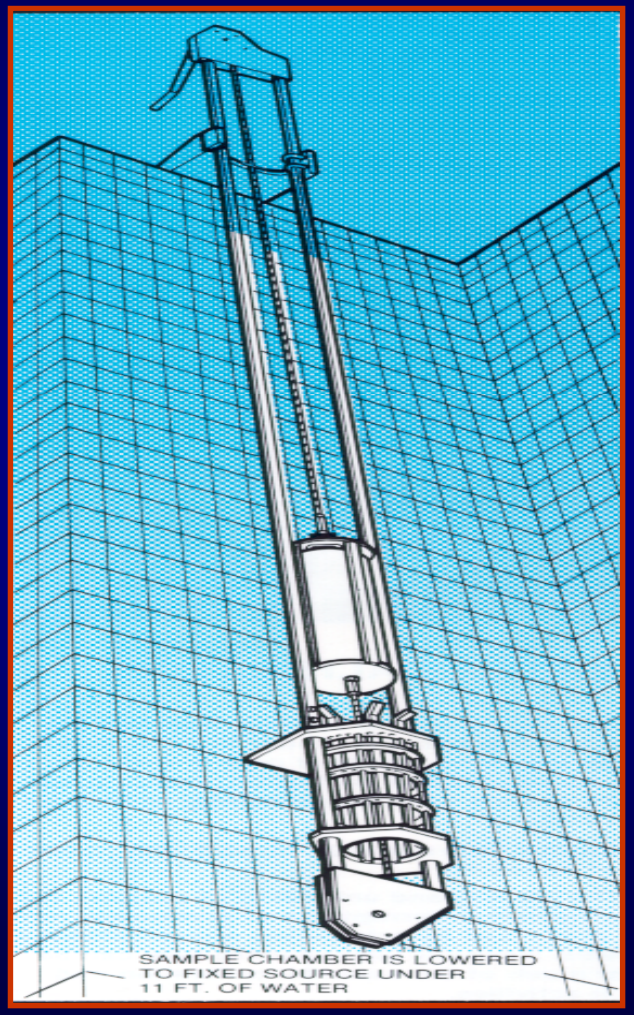

Category IV

Panoramic Wet Source Storage Irradiator

Sealed sources stored in pool, sources lifted from water to expose product.

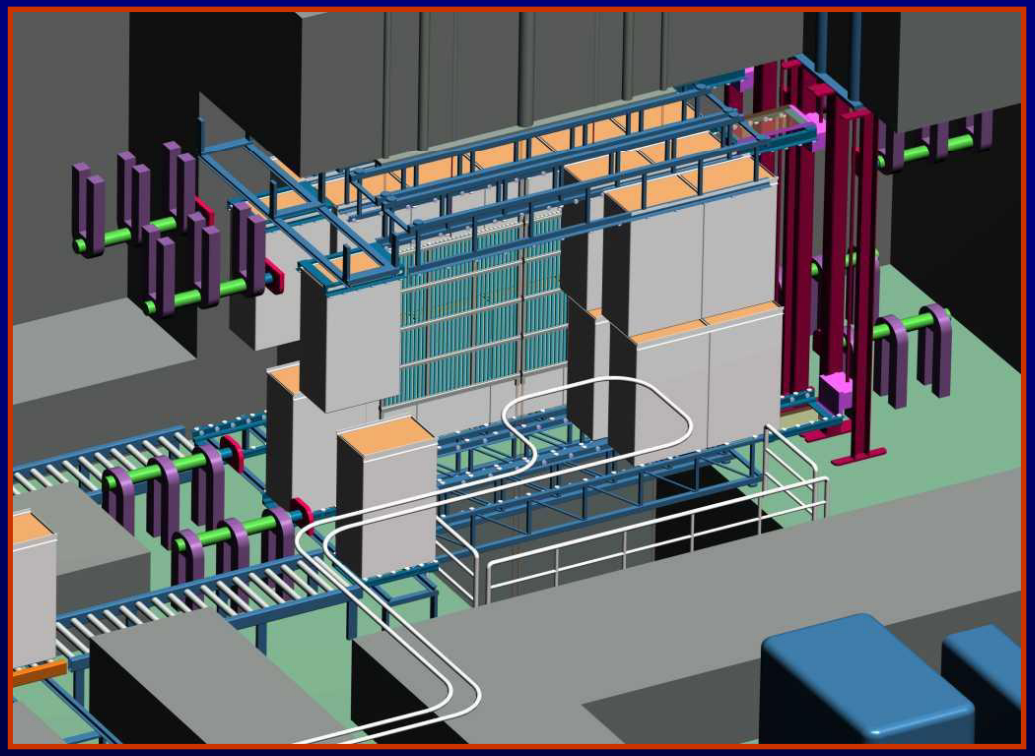

Irradiator Source

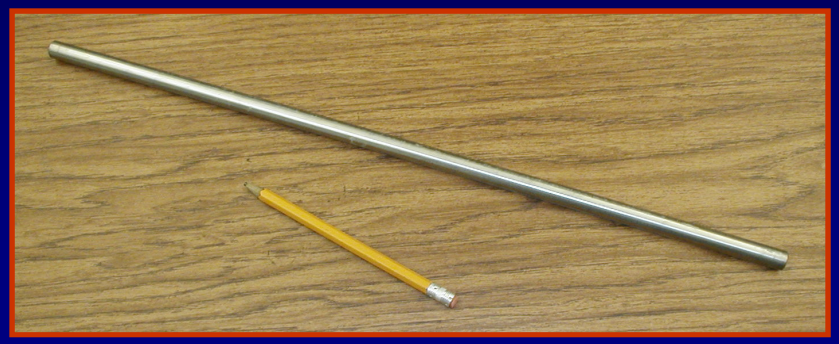

Co-60 Irradiator “pencil”

Co-60 Source “Rack”

Standard Irradiator Designs

- Conveyor bed system "Tote" design
  - Uses aluminum totes to move product via powered conveyor belts from external loading area through the irradiator cell
- Carrier system
  - Product is contained in vertical carriers on an overhead rail system and either manually or automatically moved through irradiator cell

Product Flow Example

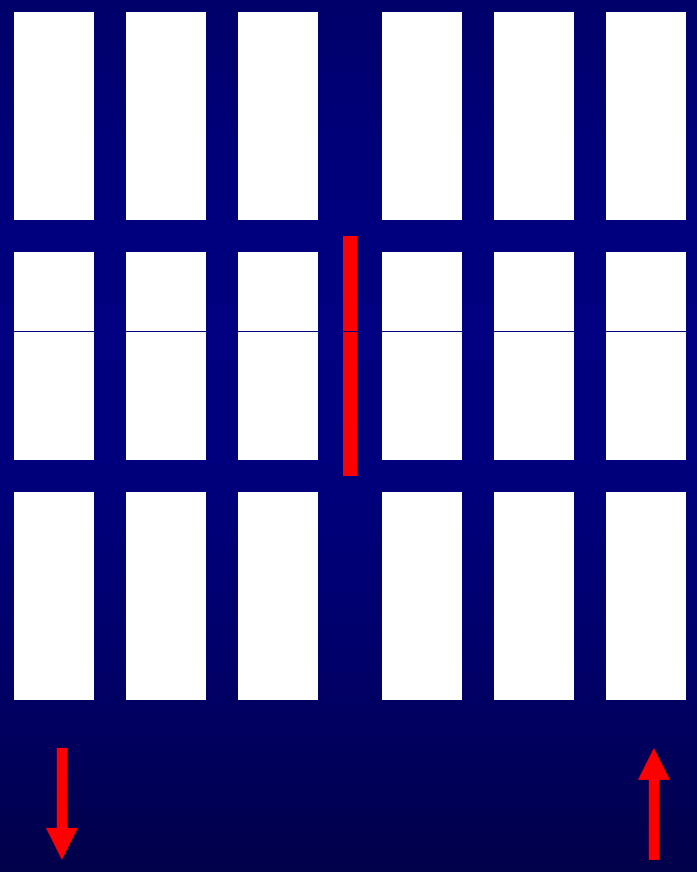

Top View

Inspection Preparations

- Review Docket File
  - Application: type irradiator and details of access controls, inspection & maintenance, operating and emergency procedures
  - Incidents, follow-up items, inspection and enforcement history, and violations for closeout
- Review license
  - Maximum source activity & commitments
- Review NMED events
- Develop an inspection plan (e.g., checklist) based on
  - 10 Part 36
  - License and commitments
  - IP 87122, "Irradiator Programs"

Irradiator Safety Inspections

- NRC Inspection Procedure
  - 87122, "Irradiator Programs"
- Determine if licensed activities are being conducted in a manner that will protect the health and safety of workers and the general public
- Determine if licensed activities are being conducted in accordance with regulatory requirements

Inspection Focus Areas

Review 10 CFR 36

- 1) Security & control of licensed materials
- 2) Shielding
- 3) Comprehensive safety measures
- 4) Radiation dosimetry program
- 5) Radiation instrumentation and surveys
- 6) Radiation safety training and practices
- 7) Management oversight

Irradiator Safety Inspections

- Access Controls
- Protection of People
- Protection of Sources
- Management Oversight

10 CFR 36.23: Access Controls

- **Each entrance has a door or other physical barrier to prevent inadvertent access**

10 CFR 36.23: Access Controls

- Door Interlock
  - Prevents moving sources to unshielded position if door is open
  - Causes sources to return to shielded position if door is opened
- Personnel Entrance Door Lock
  - Uses same key as one to move sources
  - Cannot prevent anyone from leaving

10 CFR 36.23: Access Controls

Entrance has Backup Access Detection

electric eyes at personnel entry door

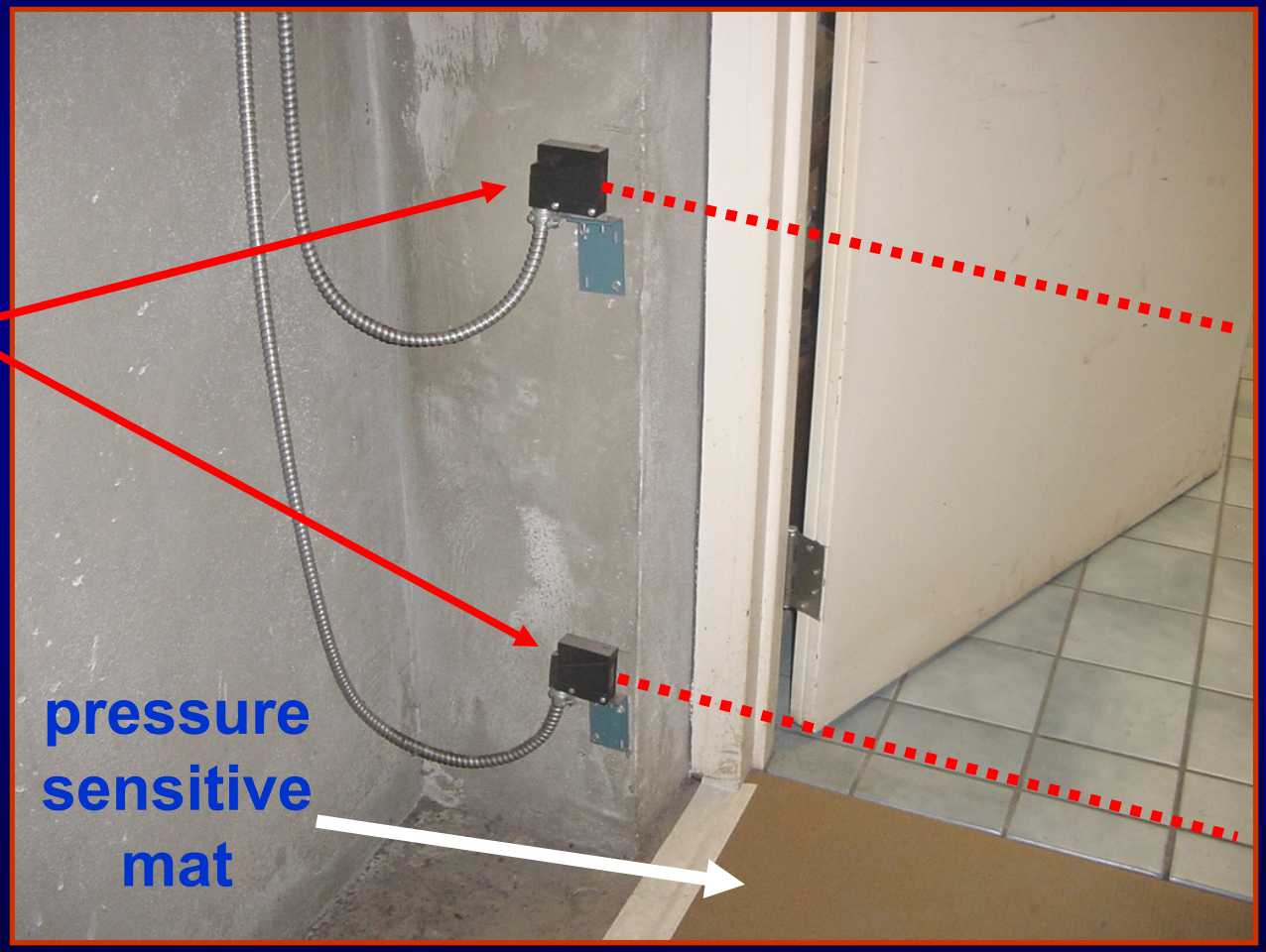

10 CFR 36.23: Access Controls

- Detection of intrusion with sources exposed causes
  - Sources to be shielded
  - Initiation of audible and visible alarms
  - Alerts one other person who is trained and prepared to respond

10 CFR 36.23: Access Controls

- Chain or gate barrier:
  - Additional safety feature
  - Disconnecting chain will disconnect air from the source hoist. Source will lower into a shielded position

10 CFR 36.23: Access Controls

- Radiation monitor required to detect high radiation before personnel entry (not located in high radiation area)
- Radiation monitors are interlocked with door to prevent room access when radiation levels are high
- Attempted access when radiation levels are high must activate audible and visual alarms, and alert one other individual

10 CFR 36.23: Access Controls

- Source movement from unshielded position activates audible and visual alarms
  - Alarms provide enough time to leave room before sources are unshielded

10 CFR 36.23: Access Controls

Emergency pull chain & start-up warning alarm

- Radiation room has clearly visible and readily accessible control that will return sources to a shielded position

10 CFR 36.23: Access Controls

- Each radiation room contains a control that prevents the sources from moving from the shielded position unless it has been activated and the door to the radiation room has been closed within a preset time.

- This requirement is to ensure that the operator verifies that no one is in the radiation room before exposing the sources.

10 CFR 36.23 Access Controls

- Radiation room is posted IAW
- 10 CFR 20.1902
  - Signs not necessary when sources are shielded

10 CFR 36.23 Access Controls

Cannot operate irradiator unless roof plug or moveable shielding in-place

Interlock or procedure

10 CFR 36.23 Access Controls

- Underwater irradiators have personnel access barriers around pool which is locked to prevent access when unattended

10 CFR 36.67(a): Entering and Leaving Radiation Room

- **Upon first entering a room after an irradiation, the operator shall use a survey meter, that has been source checked, to determine that the source has returned to a fully shielded position**

10 CFR 36.67(b): Entering and Leaving Radiation Room

- Before exiting and locking the door to the irradiation room of a panoramic irradiator, prior to a planned irradiation, the operator will enter the radiation room and:
  - Visually verify that no one is in the radiation room, and
  - Activate a control, in the radiation room, that permits the sources to move from an unshielded position, if the radiation room door is locked within a preset time after setting the control

10 CFR 36.31: Control of Source Movement

- Control console clearly marked as to function
- Control console source position indicator
  - Fully shielded (Green)
  - Transit (Yellow)
  - Exposed (Red)
- Has control that will promptly return sources to shielded position

10 CFR 36.31: Control of Source Movement

- Key is required to actuate source movement
- Only one key is in use at a time
- Key controlled by Operators or Management
- Source key attached to survey meter
- Source movement actuates audible alarm
- Radiation room door requires same key
- Key cannot be removed unless sources in shielded position

Protection of People
10 CFR 36.25: Shielding

- Inspector should verify dose rates with a calibrated survey meter
- Radiation dose rates in normally occupied areas during irradiator operation do not exceed 2 mrem/h at 30 cm from outside shield wall.
- Areas > 2 mrem/h are locked, roped-off, or posted.
- Dose rates 30 cm above pool do not exceed 2 mrem/h
- For a dry source storage irradiator, dose rates do not exceed 2 mrem/h at 1 meter and 20 mrem/h at 5 cm from from outside of shield wall

Protection of People
10 CFR 36.57: Radiation Surveys

- Licensee performed survey of outside shield wall with source exposed
  - Before initial operation
  - At intervals not to exceed three years
  - After addition of new sources or shielding modifications
- Facility modified if elevated dose rates found
- Survey instrument calibrated ± 20% for gamma energy
- Water monitored before release (<10 CFR 20 limits)
- Resin survey release limit: 0.05 mrem/h in 0.05 mrem/h background area

Protection of People
10 CFR 36.29 Radiation Monitors

- **Product Exit Monitor: If monitor detects a source, then product conveyors will stop automatically, and an alarm will sound**
- **Underwater irradiators, not in a shielded room, has audible and visible indicators at personnel access barrier.**

Protection of People
10 CFR 36.29: Radiation Monitors

Radiation monitor

At product exit door with audible alarm to detect sources carried by product conveyor system

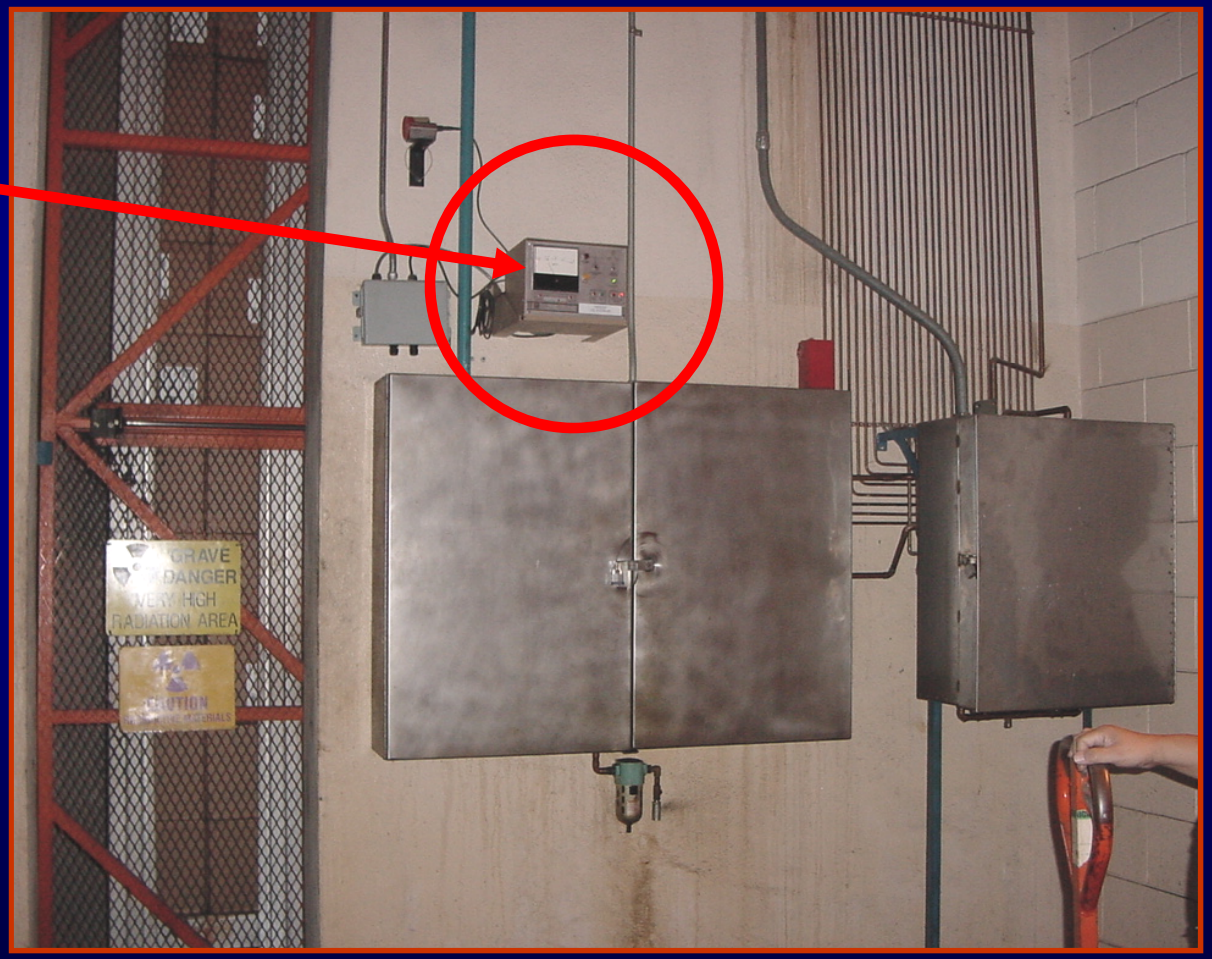

Protection of People
10 CFR 36.59 Detection of Leaking Sources

Radiation monitor

Pool water treatment equipment

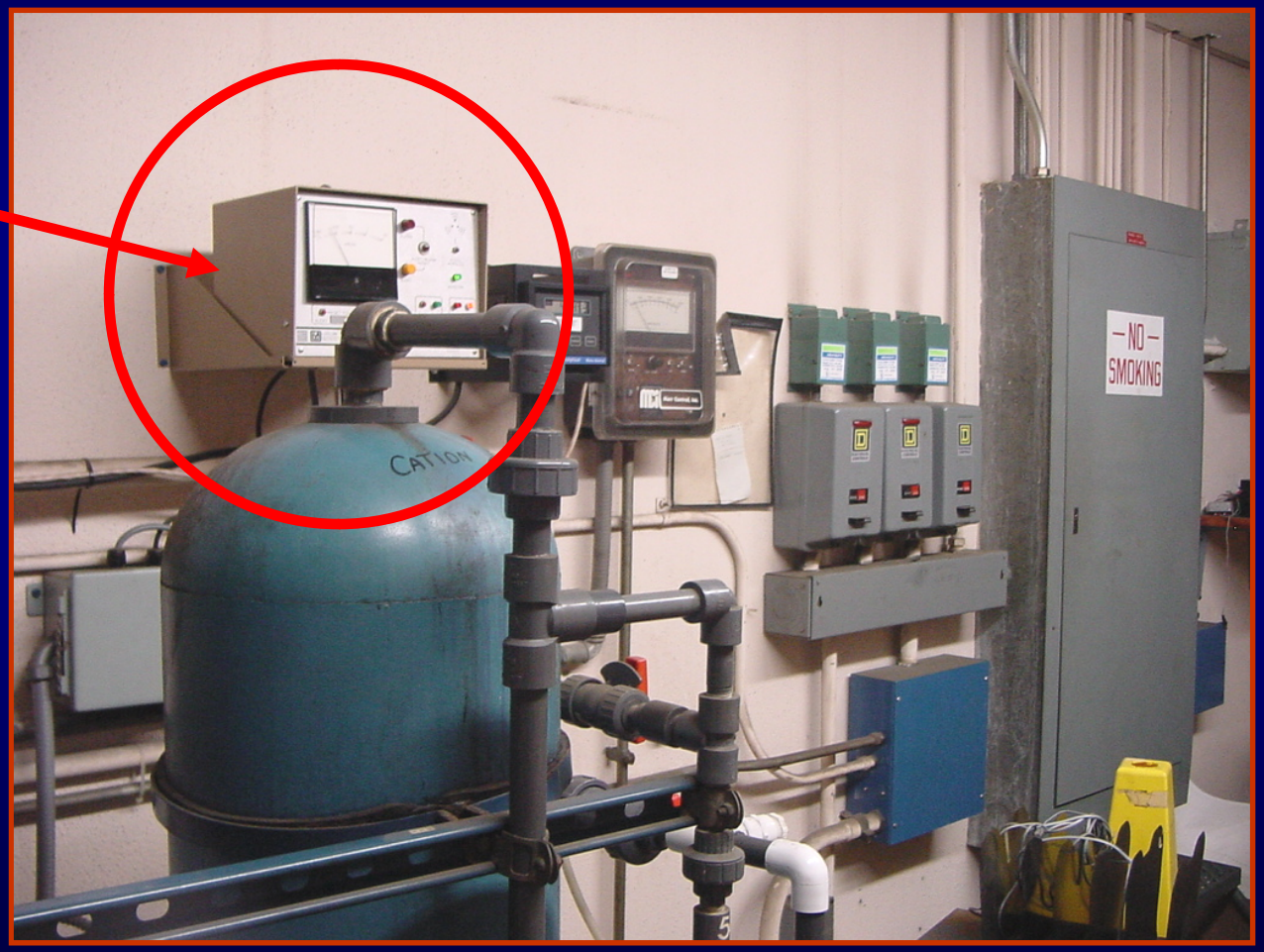

Protection of People
10 CFR 36.59 Detection of Leaking Sources

- Pool water is checked for contamination daily
  - Radiation monitor with alarm and alarm set-point set as low as practical
  - Or By
  - Grab sample analyzed within 24 hours
- If leaking source detected
  - Source removed from service, then decontaminated, repaired, or disposed of
  - Licensee checks personnel, equipment, and product for contamination

Protection of People
10 CFR 36.37: Power Failure

- If electrical power lost for > 10 seconds, sources return to shielded position
- Radiation room door lock cannot be deactivated by power failure
- Entry into radiation room during power failure requires operable and calibrated survey meter

Protection of People
10 CFR 36.55: Personnel Monitoring

- Operators wear NVLAP dosimetry while operating or near pool
  - Dosimetry accredited for high energy photons in normal accident dose ranges
  - Film processed monthly, Others quarterly
- Others entering radiation room must wear dosimetry
  - May be pocket dosimeter
  - Groups: two individuals must wear dosimetry

Protection of People
OSHA Safety Practices: Ozone Protection

- Large irradiators will generate elevated levels of ozone
- Licensee should implement ozone protection as necessary
  - Ventilation system
  - Procedures to restrict access when levels are high
  - Ozone monitors
- Concerns with exposures to ozone should be forwarded to OSHA

Protection of People
10 CFR 36.33 Irradiator Pools

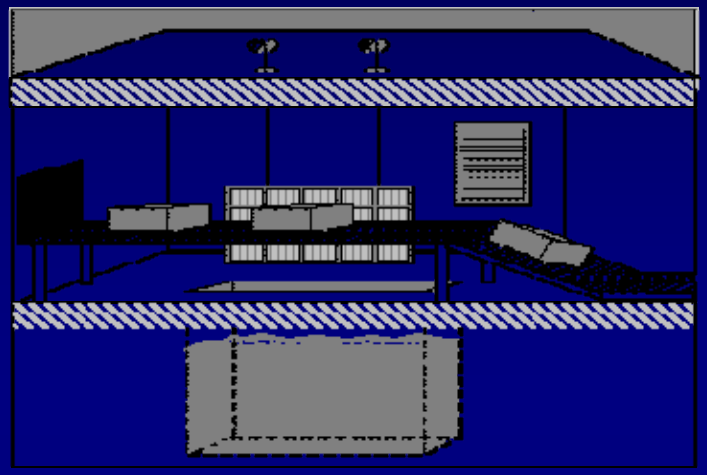

- Facility can replenish water losses
- A clearly visible water indicator level
- Equipped with a purification system to maintain conductivity of ≤20 µsiemens per cm with a clarity that enable sources to be seen clearly.

Protection of People
10 CFR 36.33 Irradiator Pools

- A physical barrier, such as a railing or cover, is used around or over irradiator pools during normal operation to prevent personnel from accidently falling into the pool.

- If long handled tools are used, radiation dose rates do not exceed 0.02 mSv/h or 2 mrem/h.

Protection of Sources
10 CFR 36.35: Source Rack Protection

- (For products that move on a conveyor system)
- The source rack and the mechanism that moves the rack must be protected by a barrier or guides to prevent products or product carriers from hitting or touching the rack mechanism

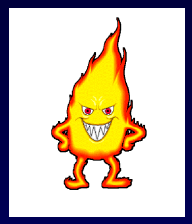

Protection of Sources
10 CFR 36.27: Fire Protection

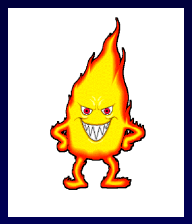

- Radiation room has heat and smoke detectors
- Heat and smoke detectors will activate an audible alarm. The alarm is capable of alerting someone who is prepared to summon assistance promptly.
- Sources become fully shielded if fire is detected.
- Radiation room is equipped with a fire extinguishing system capable of extinguishing a fire without personnel entry. Also must include a shutoff valve to control flooding in unrestricted areas.

Protection of Sources
10 CFR 36.69: Irradiation of Explosives or Flammable Materials

- Irradiation of explosive material or more than small quantities of flammable materials (flashpoint below 140 F) is prohibited
  - Unless licensee has received prior written authorization from NRC
  - Licensee must demonstrate that detonation of the explosive or fire would not rupture sealed sources, injure personnel, damage safety systems, or cause radiation overexposures of personnel.

Protection of Sources
10 CFR 36.63: Pool Water Purity

- Pool water purification system maintains conductivity <20 microsiemens per centimeter
  - If > 20 microsiemens per centimeter, licensee takes action to lower pool water conductivity and prevent recurrence
- Conductivity measurements taken weekly to assure <20 microsiemens per centimeter
- Conductivity meter calibrated annually

Protection of Sources
10 CFR 36.33: Irradiator Pools

- Licenses initially issued after July 1, 1993:
- Contains no outlets more than 0.5 meters below the normal low water level that could allow water to drain out of the pool.

Siphon Breaker Valve

- Pipes that have intakes more than 0.5 meter below normal low water level and that could act as siphons must have siphon breakers to prevent the siphoning of pool water.

Protection of Sources
10 CFR 36.33: Irradiator Pools

- Licenses initially issued after July 1, 1993:
- Has water tight stainless steel liner metallurgically compatible with other components in the pool; OR
- Pool constructed so it is unlikely to be subject to substantial leakage and surface facilitates decontamination.
- Licensee can safely store sources during repairs of the pool.

Management Oversight
10 CFR 36.65: Physical Presence

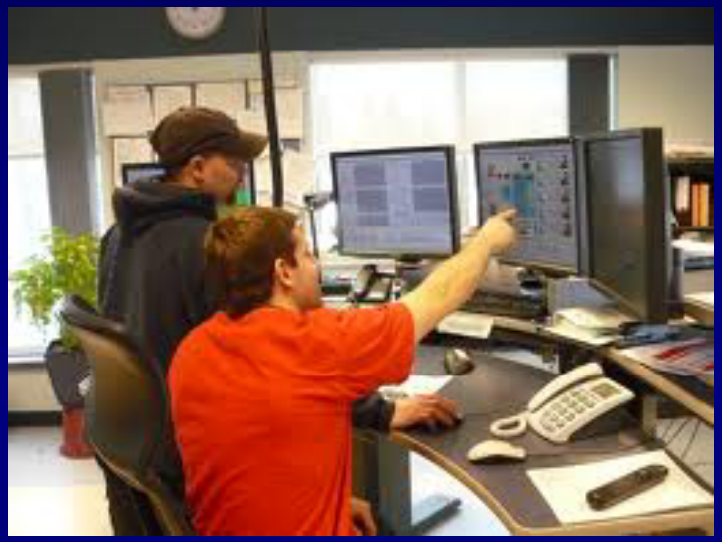

- Irradiator Operator and Another Individual must be physically present, IF
  - Irradiator operated with automatic conveyor
  - Whenever product moves in/out in batch mode

Management Oversight
10 CFR 36.53: Operating and Emergency Procedures

- Written operating procedures
- Emergency or abnormal event procedures for
  - Sources stuck in the unshielded position
  - Personnel overexposure
  - Radiation alarms
  - Detection of leaking sources
  - Water level or leakage alarms
  - Prolonged loss of electrical power
  - Fire alarm or explosion in the radiation room
  - Intrusion alarms
  - National phenomena, earthquake, tornado, flooding
  - Jamming of automatic conveyor systems

Management Oversight
10 CFR 36.61: Inspections & Maintenance

- Licensee required to conduct maintenance checks of equipment according to approved procedures, and makes a record of the checks
- Attempt to observe maintenance checks if possible.

Management Oversight
10 CFR 36.61: Inspections & Maintenance

- Access control system
- Rad monitors
- Emergency source return
- Intrusion alarms
- Product source barriers
- Heat and smoke detectors
- Safety system wiring
- Pool water replenishment
- Conductivity

Management Oversight
10 CFR 36.51: Training

- Properly trained Operators are the key to safe operations
- Licensee must maintain a robust training and Operator evaluation program
- Should be reviewed during inspection

Management Oversight
10 CFR 36.51: Training

- Operator safety reviews conducted annually. Includes a brief written test.
  - Changes in O&E procedures since last review
  - Changes in regulations and license conditions
  - Reports on recent accidents, mistakes, or problems that have occurred at irradiators
  - Relevant of operator safety performance
  - Results of the facility inspection and maintenance checks
  - A drill to practice an emergency or abnormal event procedure

Management Oversight
Source Loading & Unloading

- Source loading needs to be performed by properly trained and qualified individuals
- Verify the qualifications of individuals who load and unload sources
- If licensee, have they submitted a description of the qualifications of personnel and procedures used to load and unload sources, OR
- If Vendor, are they properly qualified?

10 CFR 20.2207: National Source Tracking System (NSTS)

- **Verify that licensee has submitted an NSTS Report for each type of transaction**

- ***NOTE: Panoramic irradiator licensees must account for many sealed source transactions. Licensees typically, take an electronic copy of the source supplier's NSTS report (e.g., Excel spreadsheet), and enter their source receipt information, and reconcile the two data bases. That method enables them to quickly identify and resolve any discrepancies.***

Management Oversight
Financial Assurance

- Financial Assurance is required
- A Decommissioning Funding Plan is required

- Verify that the licensee:
  - Has proper financial assurance documents on file
  - Has proper Decommissioning Funding Plan records on file

Baxter Event

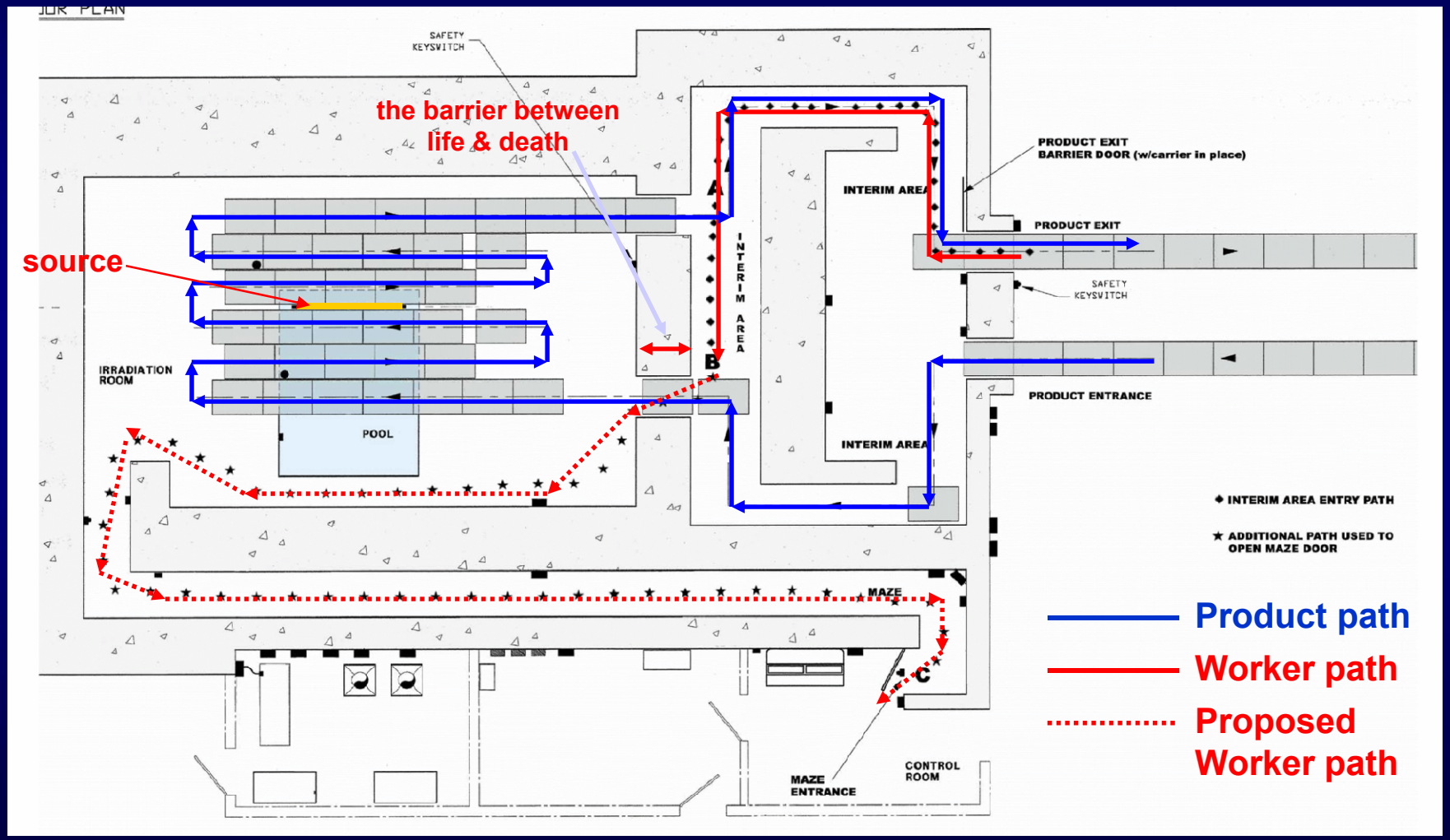

Baxter Event: Product Pathway

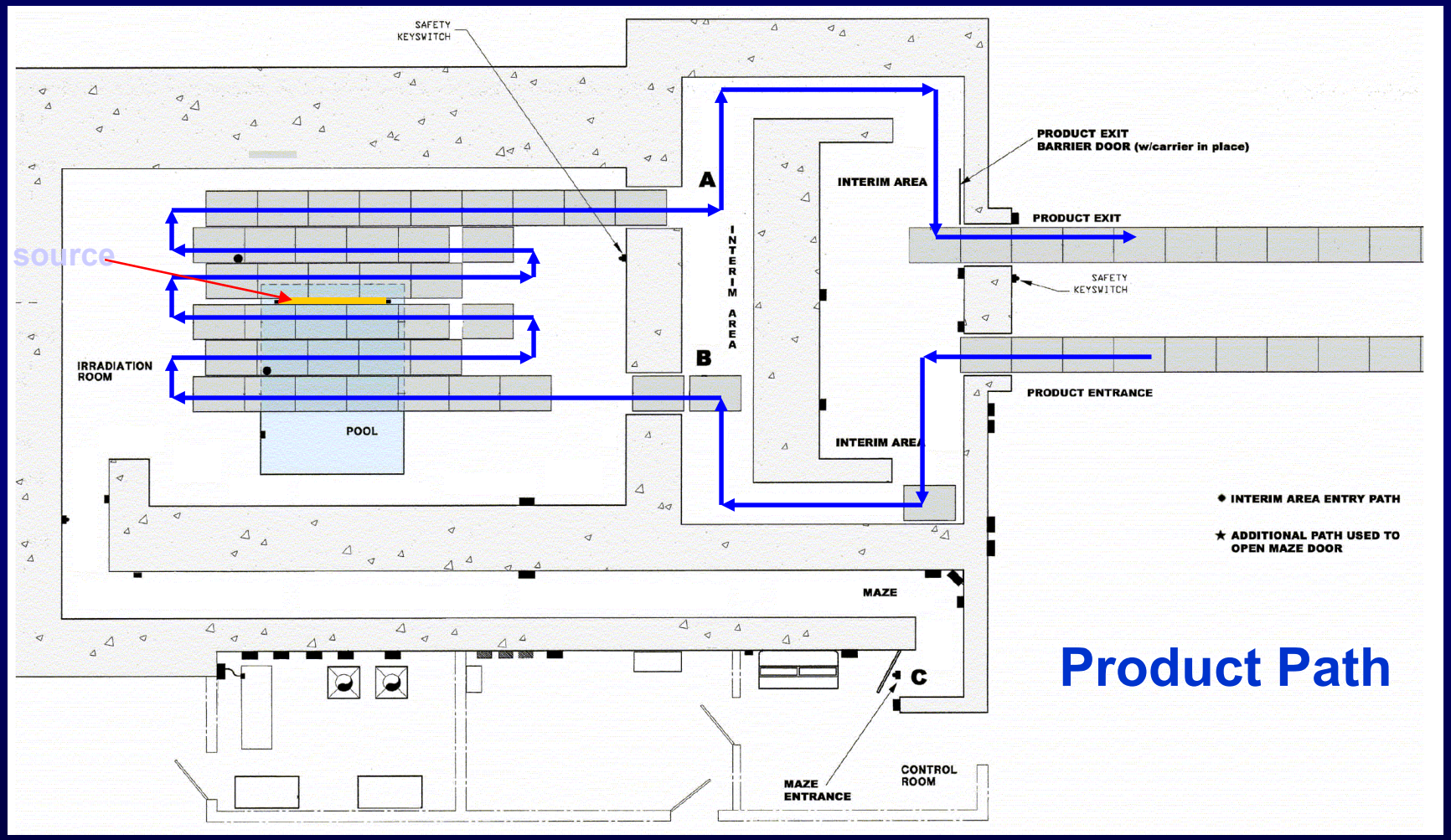

Baxter Event:
Worker Entry Prior to the Event

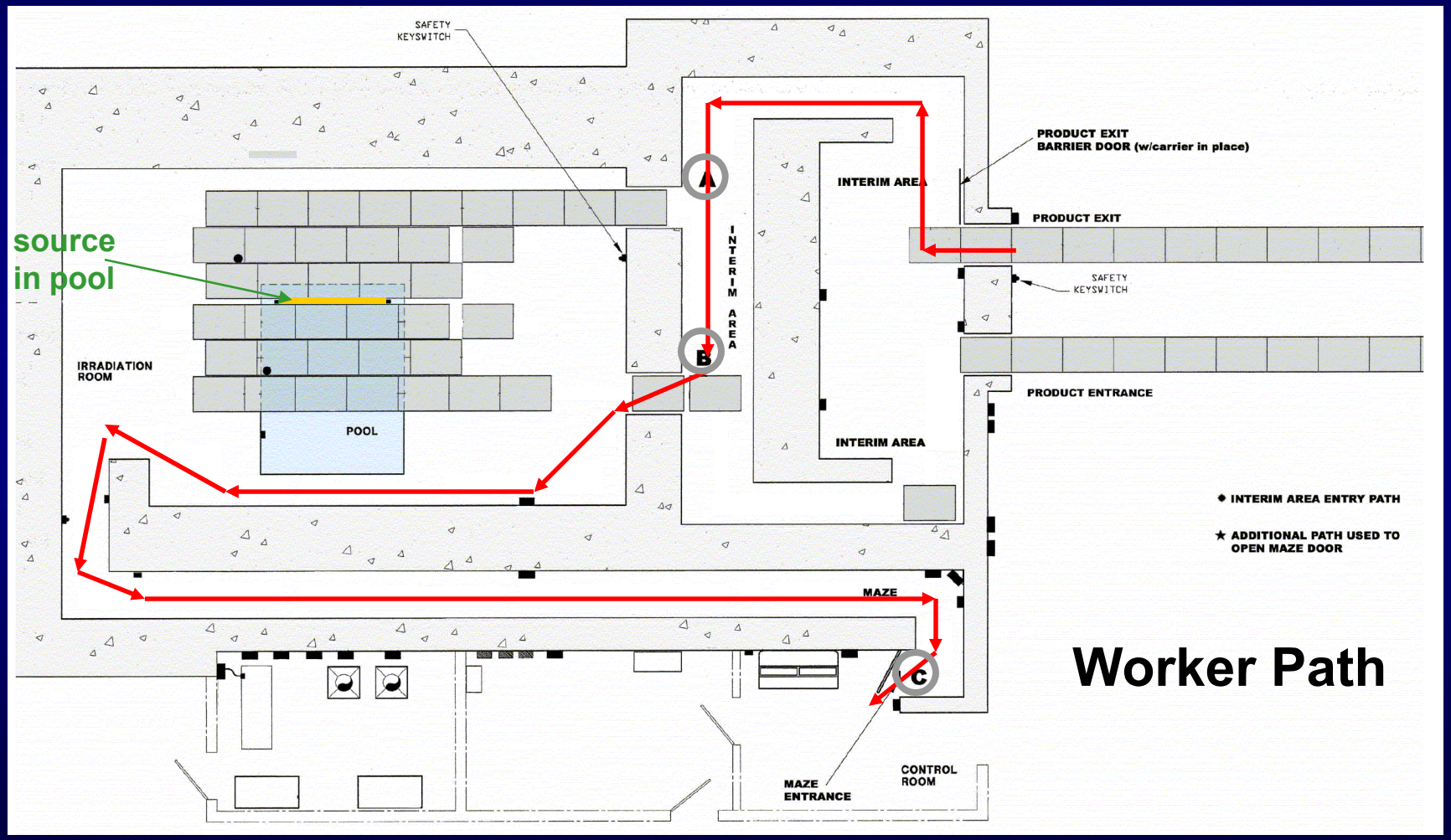

Baxter Event: Dose Rates in Intended Path from Product Exit Door to "Personnel Door

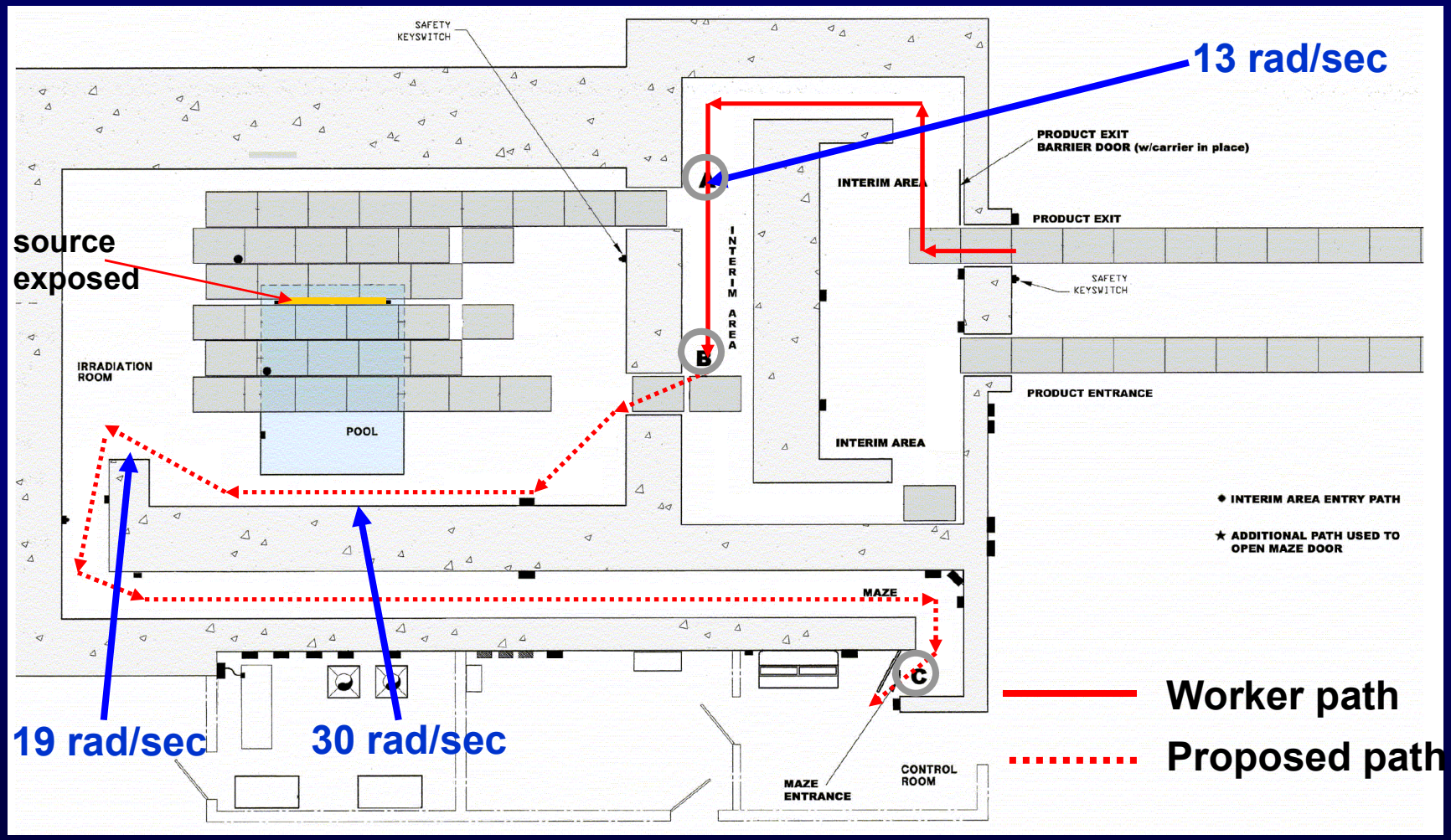

Baxter Event: Entered Product Exit Door, Walked from A to B, Stopped and Returned

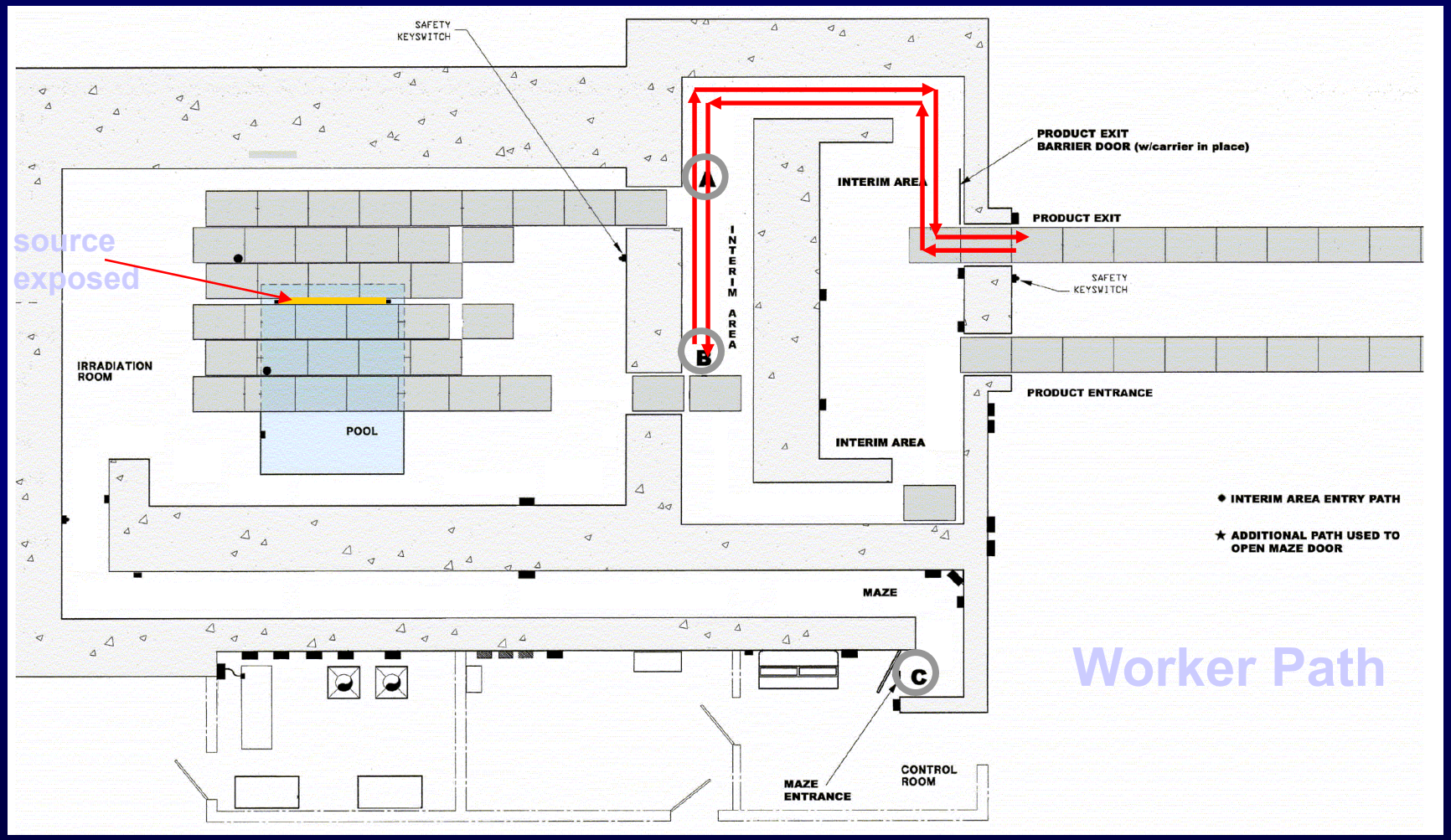

Baxter Event 2004

- Failure to follow emergency and abnormal event procedures
- Failure to perform a survey
- Failure to wear personnel dosimetry
- Failure to perform operator safety reviews
- Failure to administer annual operator exams

Examples of NMED Events

- Operator initiated start-up with someone in cell
- Malfunctioning source rack hydraulic lift, causing sources to move from fully shielded position. Resulted in 4.4 – 4.8 Gy (440 – 480 rad)
- Source stuck in unshielded position due to improper product loading
- Source rack failure to descend to a fully shielded position: multiple examples – frayed cable, solenoid, obstructions, etc.
- Unexpected movement of carrier - fatality

Irradiator Licensing

- NUREG-1556, Vol. 6: Program-Specific Guidance about 10 CFR Part 36 Irradiator Licensees
- Requires well planned, detailed responses
- Requires Financial Assurance and Decommissioning Funding Plan
- Detailed descriptions of the facility
  - Access controls and alarms
  - Shielding and diagrams
  - Fire protection systems

Irradiator Licensing Requires Detailed Descriptions

- Radiation Monitors
  - Locations, types, diagrams, methods for establishing alarm setpoints,
- Pool
  - Liner, level indication, purification system, replenishment, personnel barrier, pool outlets and prevention of water loss, use of long handled tools, radioactivity protection
- Source rack protection
- Power failure affects on sources and door locks

Irradiator Licensing Requires Detailed Descriptions

- Pool water radioactivity monitoring
- Inspection and Maintenance checks