Irradiator technology H 315
Session 3
All Gammacells now made by:

Best Theratronics

Research Irradiators (Cat. I)

- Gammacell 40 Exactor
- Gammacell 220 Excel
- Gammacell 1000 Elite
- Gammacell 3000 Elan

nordion

Gammacell 40 *Exactor*

Number of Sources: 2

Isotope: Caesium 137

Total Activity: 133.3TBq (3600CI)

Central Dose Rate: 1.3 Gy/min

Installed Weight: 2994kg (6600lbs)

Sample Chamber:

105 mm high (4.1”)

312 mm diameter (12.3”)

nordion

Gammacell 40 *Exactor*
Sample Container - Dose Distribution

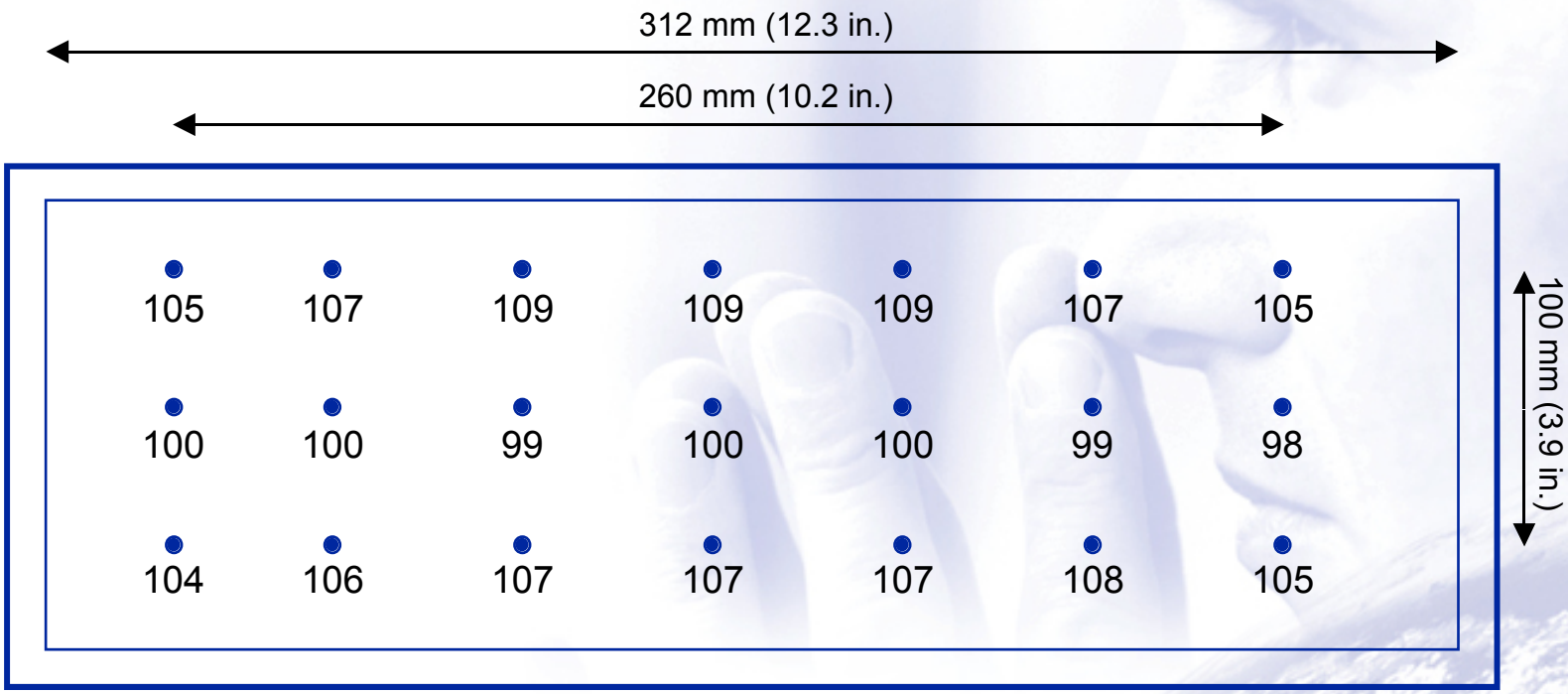

Typical Absorbed-Dose Distribution
(All values in percent are relative to the central dose)

nordion

GC-40 Maintenance (allowed by user)

- Monthly
  - Confirm timer accuracy each month.
- Periodic inspections
  - Ball screws and drive belt
  - Examine electrical connections
  - Electrical switches
- Semi-Annual Contamination Check
- Annual Inspections
  - All electrical connections
  - Wipe all ball screws, clean & lubricate
  - Lubricate source drawer drive bearings

nordion

GC-40 Maintenance (allowed by user)

- Annual Inspections
  - Adjust if necessary the drive belt tension
  - Source Off & On switches actuation
  - Photo sensors limit switches
  - Batteries:
    - Two lead-acid (expected life 4 to7 years)
    - IBT battery (expected life 5 to 7 years)
    - SBC battery (expected life about 10 years)
- Survey:

  See manual for form

nordion

Gammacell 40 *Exactor*

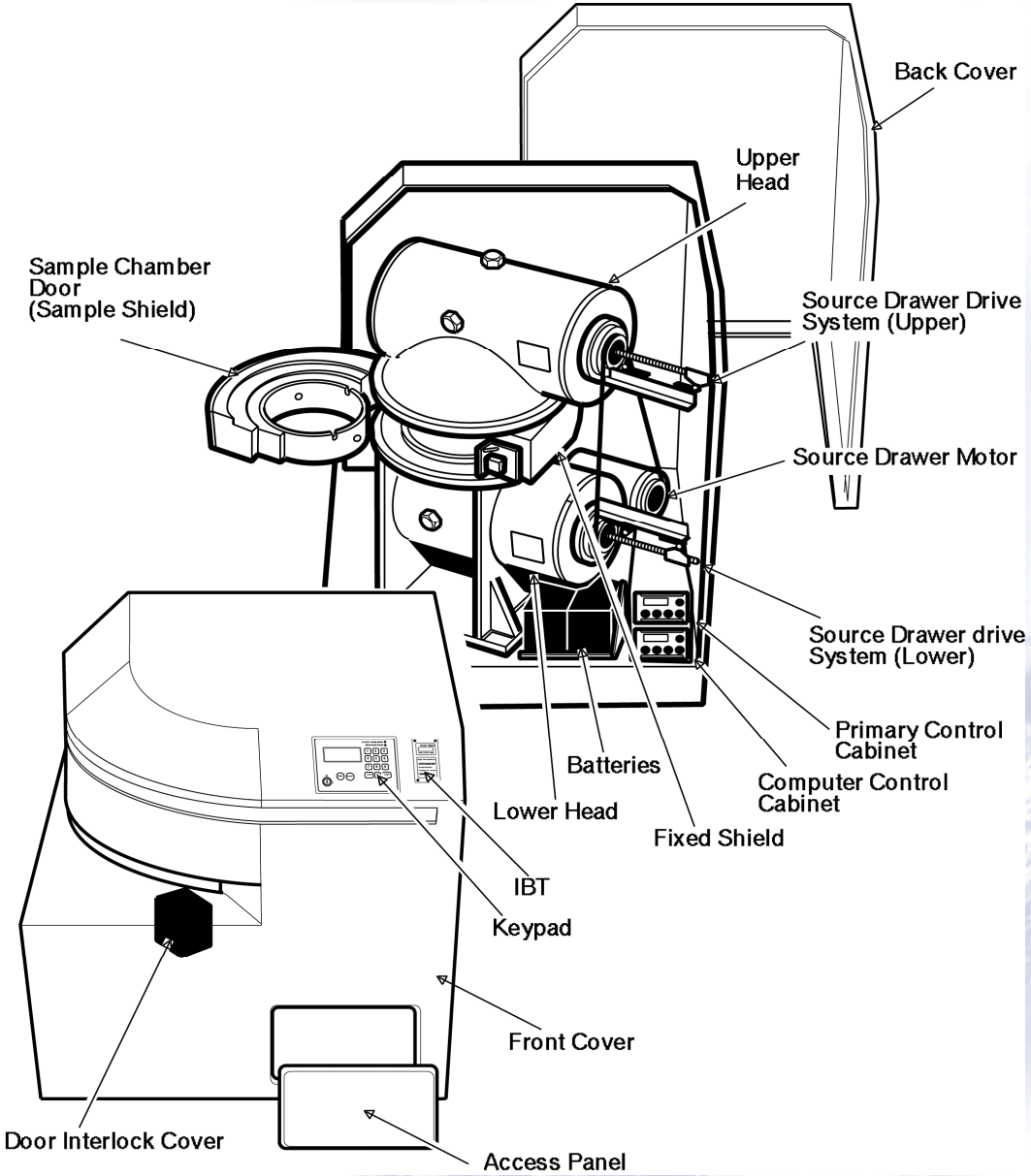

nordion

GC-40 Survey

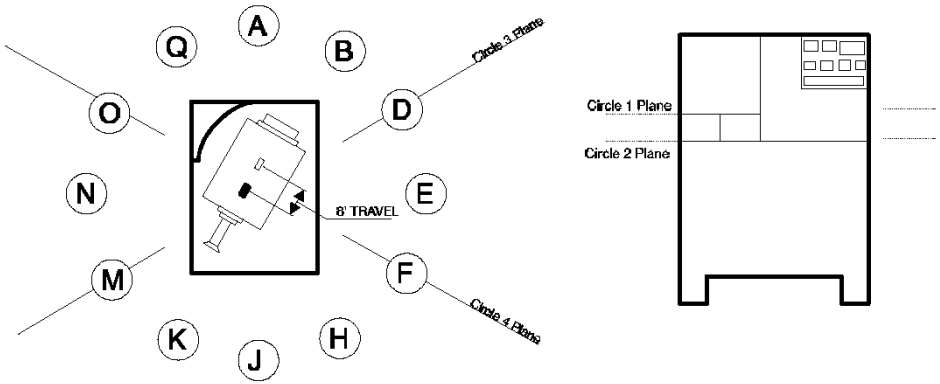

CIRCLES 1 & 2

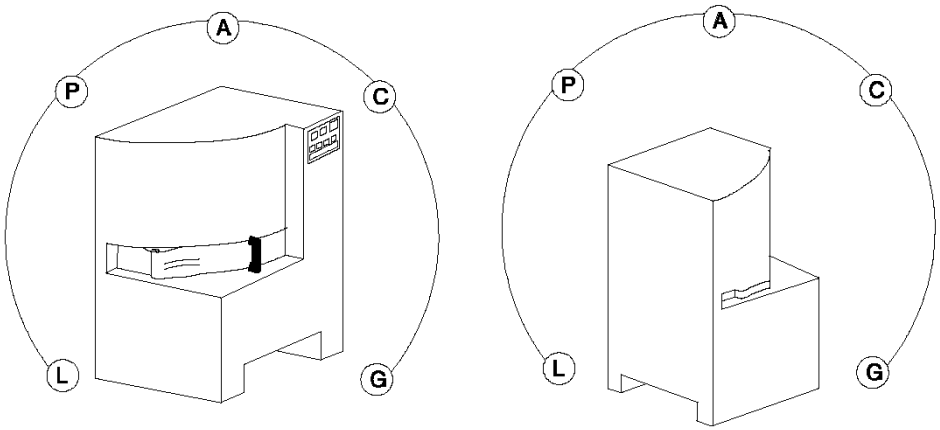

CIRCLE - 3

CIRCLE - 4

GC-40 Exactor Irradiator Survey Format

IN/IM 0309 GC40E F4 - 3 of 3

Gammacell 40 - Collimators

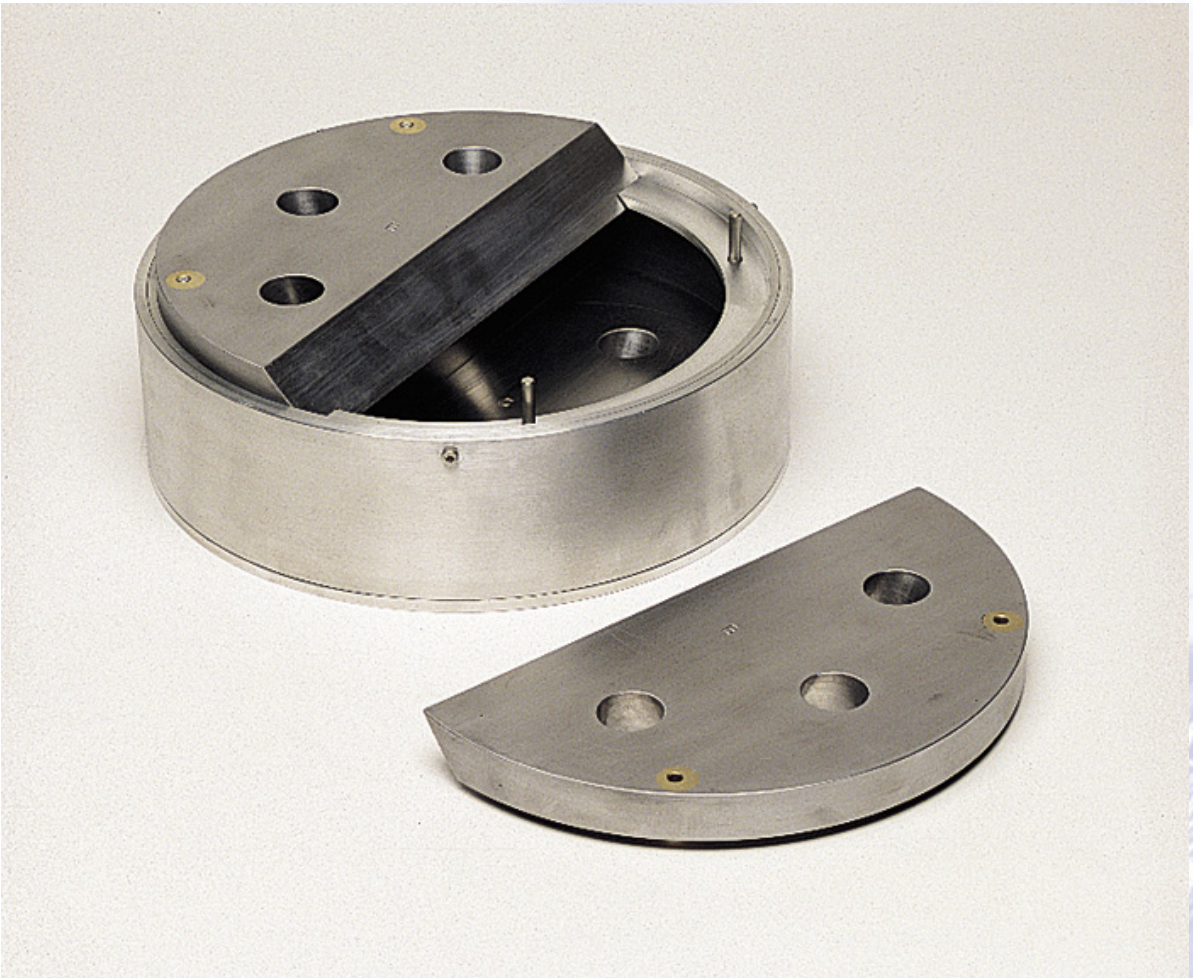

nordion

Gammacell 40 - Attenuators

nordion

REFURBISHED Gammacell 220 *Excel*

Isotope: Cobalt 60

Maximum Activity: 24,000 Ci

Max. Central Dose Rate: 20kGy/hour

Installed Weight: 4000kg (8830 lbs)

Sample Chamber:

20.0 cm high (7.87”)

15.2 cm diameter (6.0”)

nordion

Example Central Dose Rates

Activity	Dose rate	
•6,000 Ci	5 kGy/hr	(0.5 Mrad/hr)
•12,000 Ci	10 kGy/hr	(1.0 Mrad/hr)
•18,000 Ci	15 kGy/hr	(1.5 Mrad/hr)
•24,000 Ci	20 kGy/hr	(2.0 Mrad/hr)

nordion

TYPICAL GC220 *Excel* ABSORBED-DOSE DISTRIBUTION

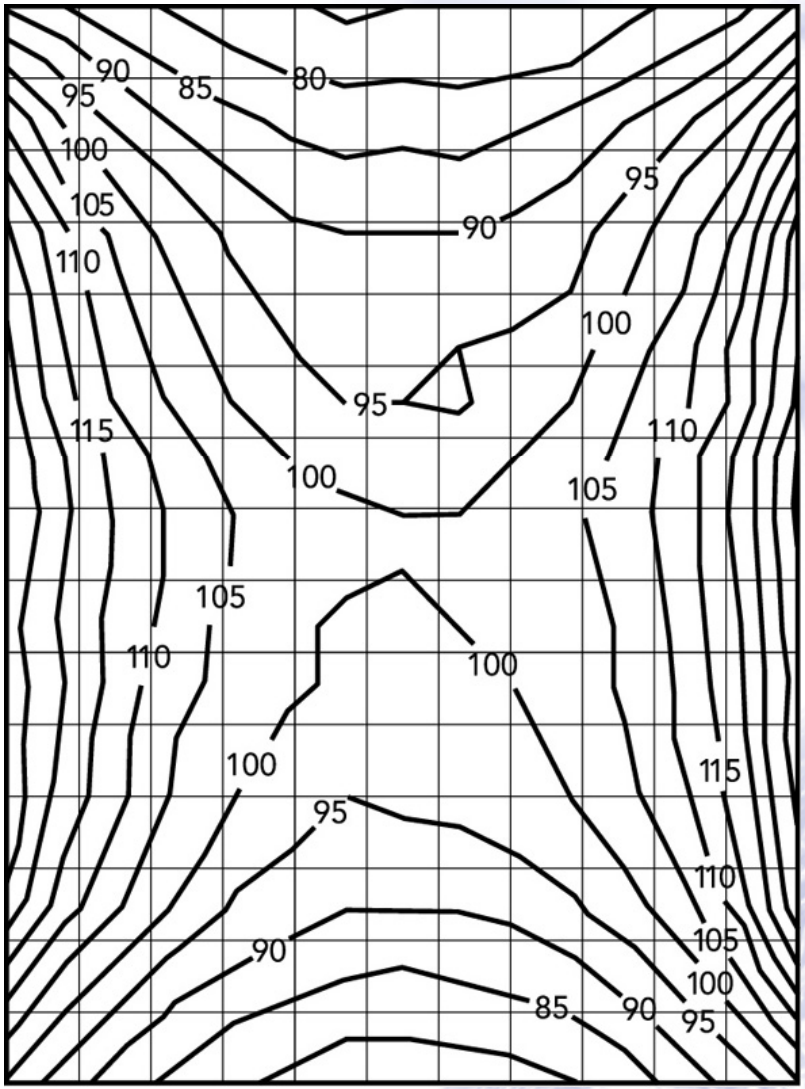

nordion

GC-220

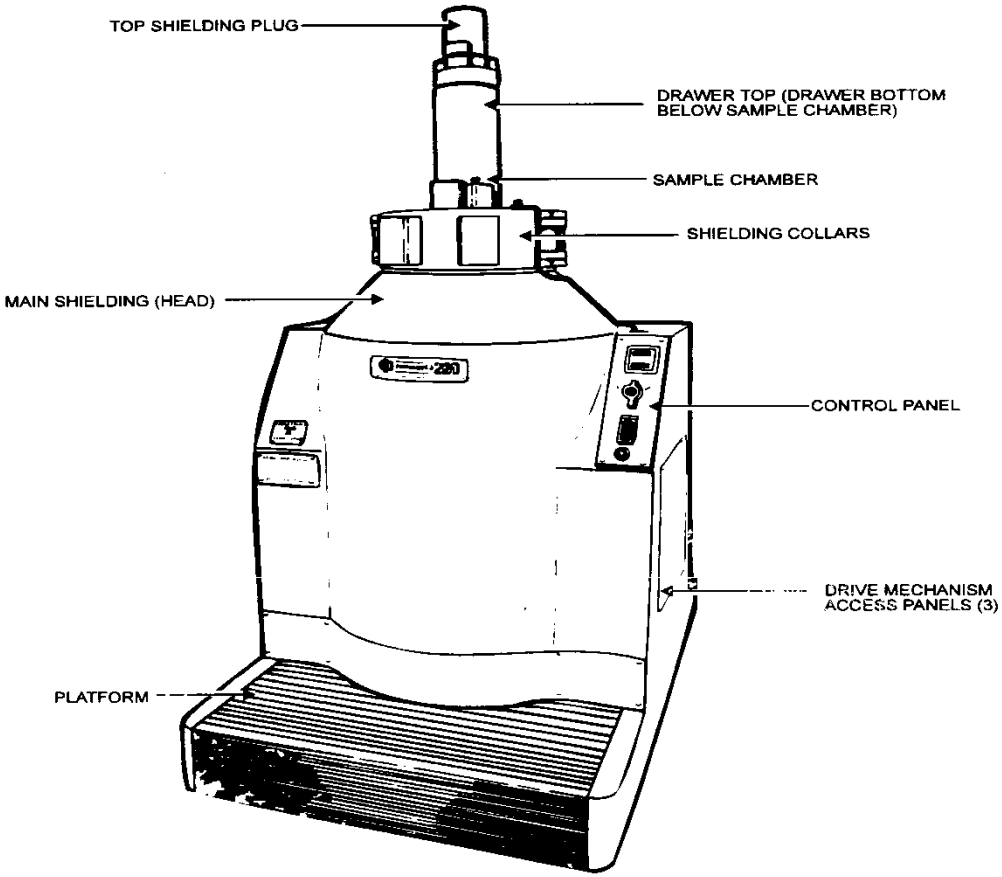

Figure 2-1
Overall View of Gammacell 220

nordion

Sealed Source & Cage

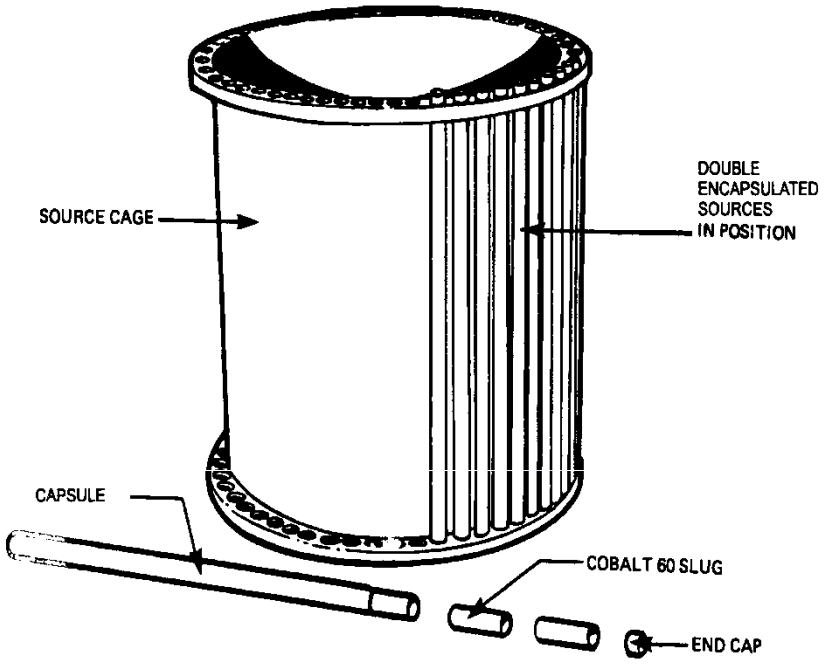

Figure 2-3
Sealed Sources and Cage

GC-220 Maintenance (allowed by user)

- General
  - Keep irradiator in clean condition
- Annual Lubrication & Inspection
  - Clean & lubricate drive chains
  - Electrical connections
  - Adjust Collar doors, V belt, & chains
  - Adjust mechanical stop
  - Inspect electrical interlocks
  - Adjust all microswitches
  - Clean & lubricate top & bottom drawers
  - Replace IBT battery

nordion

GC-220 Maintenance (allowed by user)

- Annually
  - Confirm accuracy of timer
  - Wipe test
- Survey
  - See manual for form

nordion

GC-220 Survey

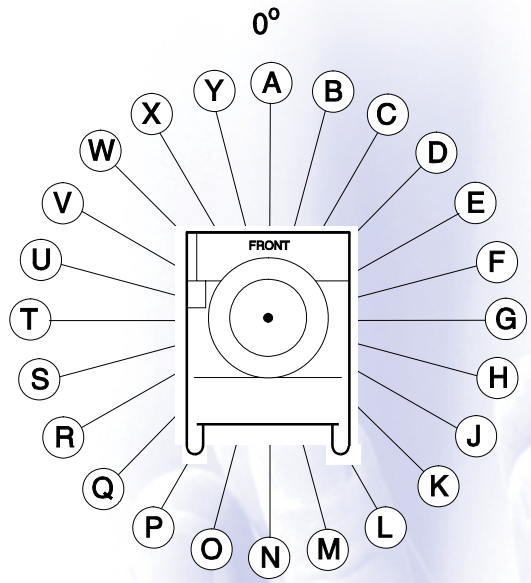

CIRCLE - 1

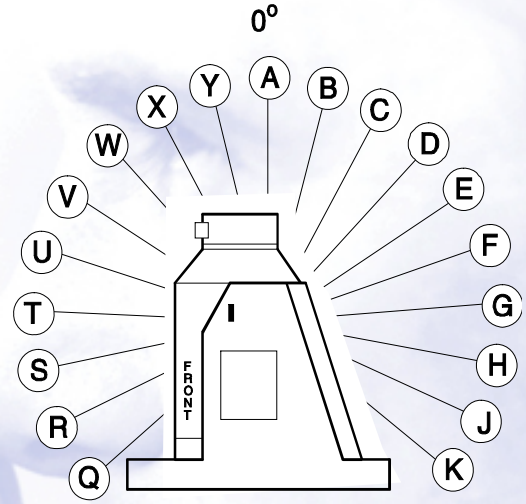

CIRCLE - 2

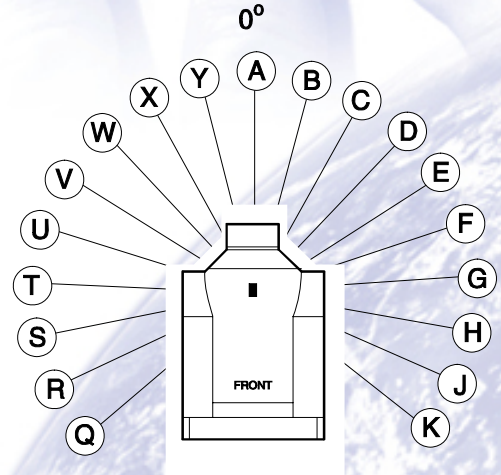

CIRCLE - 3

nordion

Gammacell 220 *Excel* Control Panel

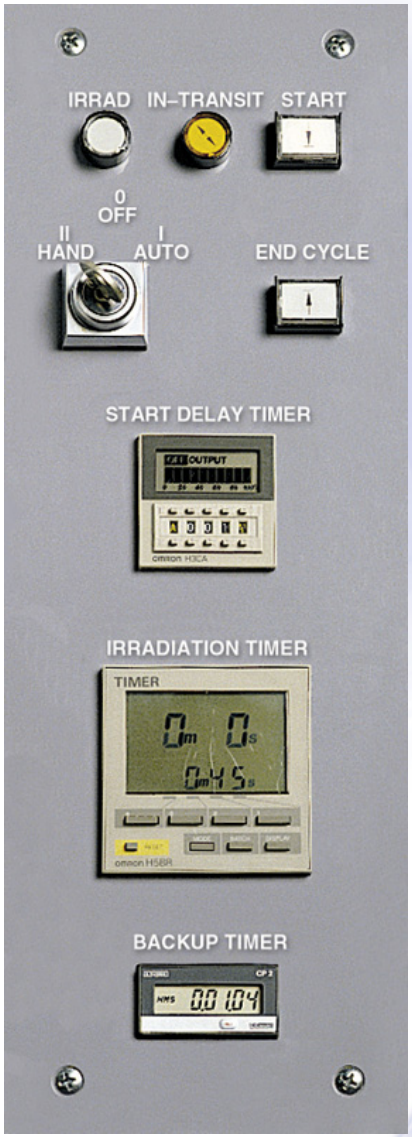

nordion

Gammacell 1000 *Elite*

Isotope: Caesium 137

Installed weight:	**1150 kg (2535 lbs.)**
Height:	**1422 mm (56 in.)**
Width:	**762 mm (30 in.)**
Length:	**660 mm (26 in.)**
Floor loading:	**2285 kg/m^2 (468 lb/ft^2)**
Power charged by:	**12V DC battery** **110/120V AC (standard)** **100V AC (optional)** **208–240V AC (optional)**

Note: An allowance of 6 inches should be provided around the unit for maintenance

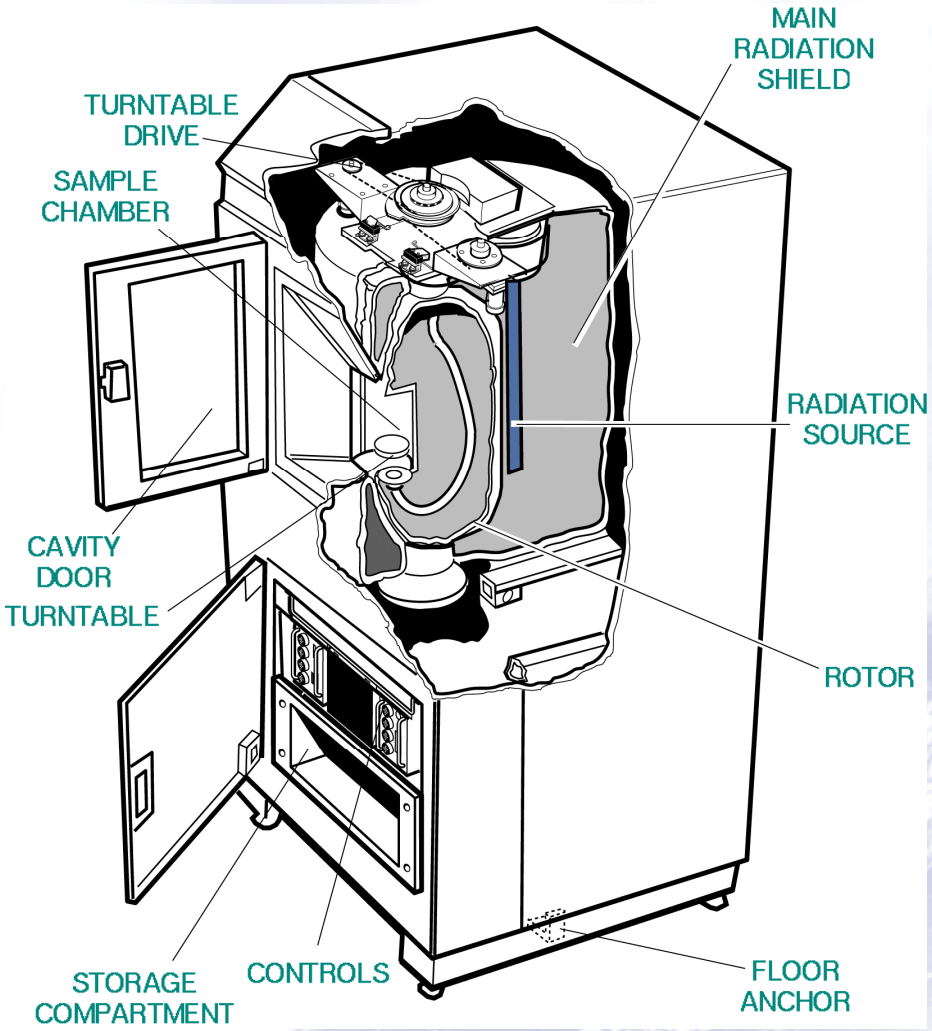

nordion

Gammacell 1000 DOSE DISTRIBUTION IN POLYSTYRENE (Blood-equivalent medium)

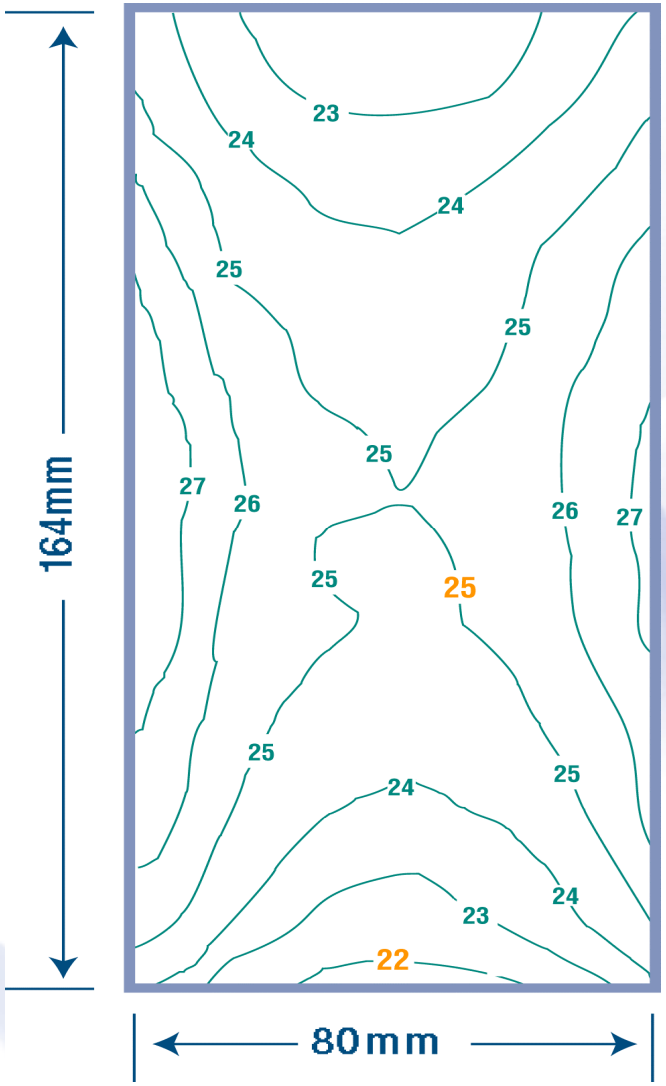

- 25 Gy targeted to centre of canister
- Absorbed-dose measurements in Gy
- 1 Gy = 100 rad = 100 cGy

nordion

MDS Nordion PROVIDES new units with:

- Measurement and leak test certificate
- User's, Site master, and troubleshooting manuals - in English
- User's manual - translated for medical devices going into CE Mark countries
- Dose map
- 1 year warranty on parts and labour
- Training certificates (if required)

nordion

GC-1000 Maintenance (allowed by user)

- Monthly
  - Confirm timer accuracy each month.
- Annually
  - Inspect electrical connections for looseness
  - Clean and lubricate rotor drive chain
  - Check/adjust mechanical stop on drum rotor
  - Check/adjust limit switches for rotor
  - Batteries
    - One lead acid (expected life 4 to 7 years)
    - One IBT battery (expected life 5 to 7 years)
    - One SBC battery (expected life 10 years)

nordion

GC-1000 Maintenance (allowed by user)

- Annually
  - Contamination (or per authority's schedule)
  - Survey (see manual for form)

nordion

TYPICAL EXTERNAL RADIATION FIELDS
Gammacell 1000 *Elite*

READING LOCATION	mrem/h			µSv/h		
	Model A	Model I	Model II	Model A	Model I	Model II
TOP	0.5	0.9	1.8	5.0	9.0	18.0
LEFT SIDE	0.05	0.1	0.2	0.5	1.0	2.0
RIGHT SIDE	0.05	0.1	0.2	0.5	6.0	2.0
BACK	0.3	0.6	1.2	3.0	6.0	12.0
FRONT CHAMBER: LOAD POSITION	0.25	0.5	1.0	2.5	5.0	10.0
FRONT CHAMBER: MOVING	0.25	0.5	1.0	2.5	5.0	10.0
FRONT CHAMBER: IRRADIATE POSITION	0.25	0.5	1.0	2.5	5.0	10.0
FRONT CHAMBER: INSIDE STORAGE	0.25	0.5	1.0	2.5	5.0	10.0

ICRP MAXIMUM ALLOWABLE RATE 20 mrem/h
RECOMMENDATIONS OF THE
INTERNATIONAL COMMISSION ON RADIOLOGICAL PROTECTION
PUBLICATION-#15, 21 & 33

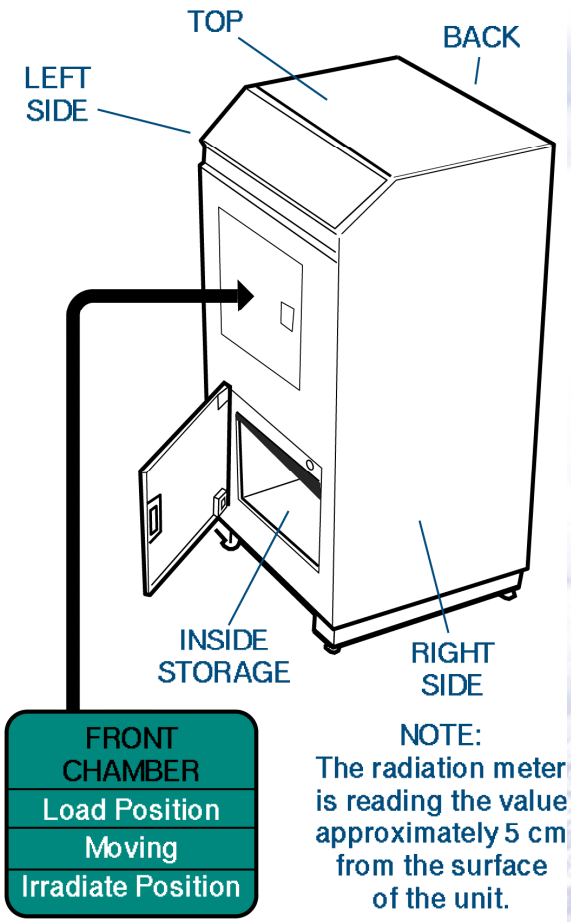

NOTE:
The radiation meter is reading the value approximately 5 cm from the surface of the unit.

(1mrem/h = 10µSv/h)

nordion

General Components Location

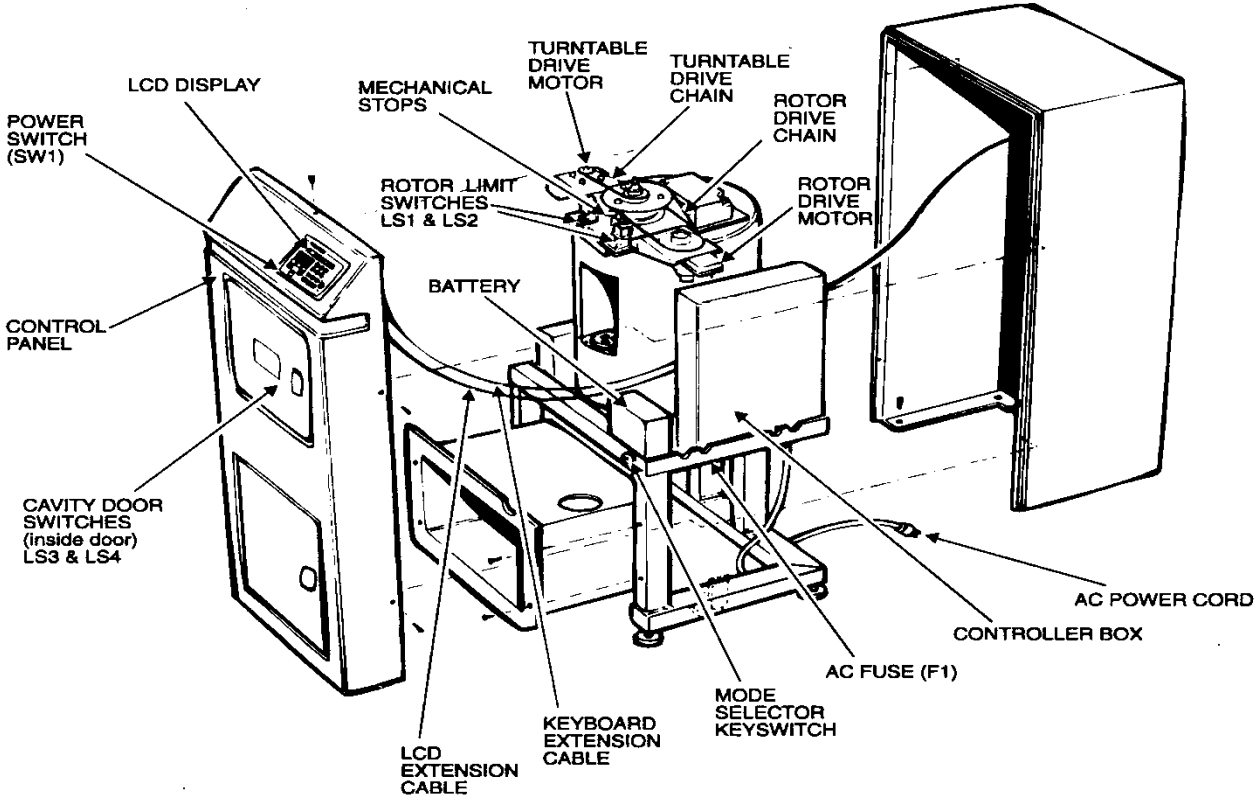

Figure A-1
General Component Parts Location -Troubleshooting

nordion

Wipe Location

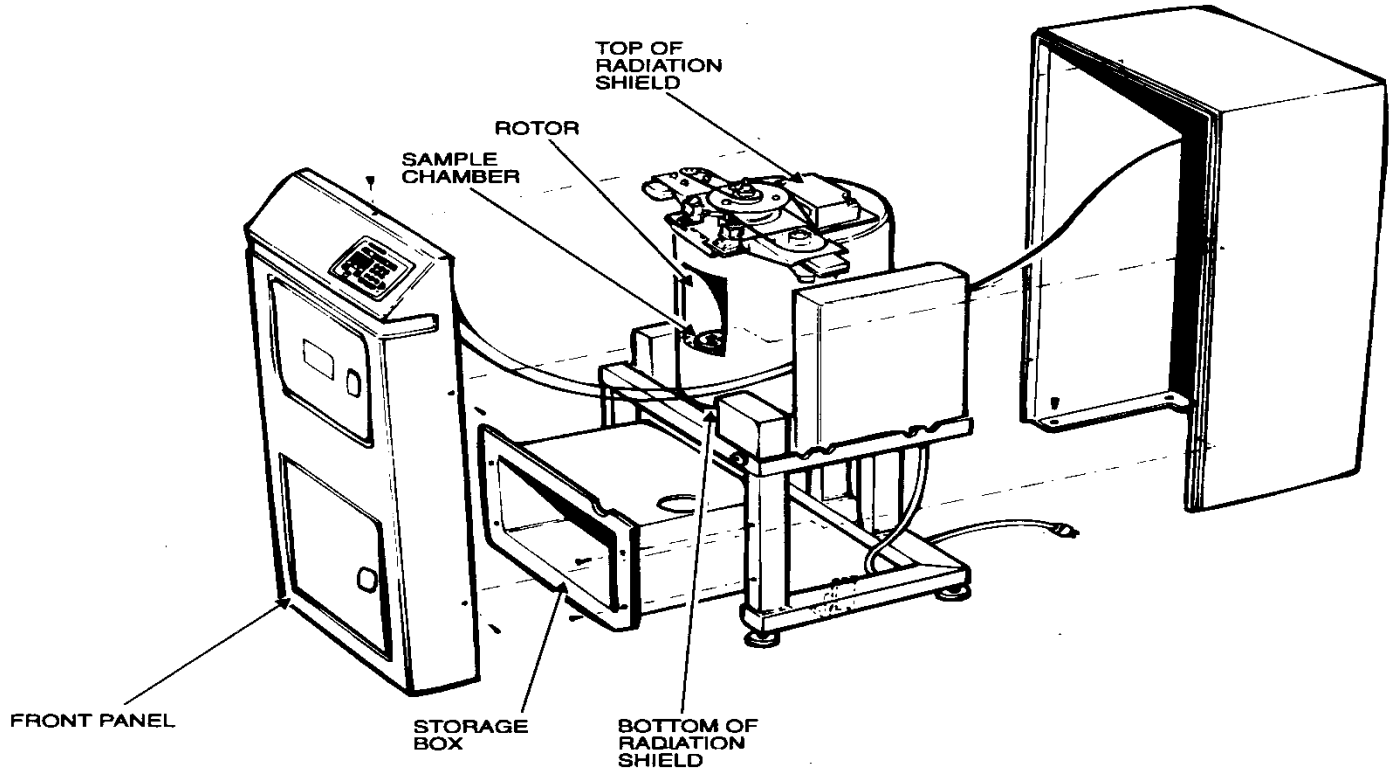

Figure 8-1
Component Location for Wipe Procedure

nordion

GC-1000 Survey

GC-1000 ELITE Irradiator - Radiation Readings

Reading Locations	Fields on Contact (mrem/h)	Comments
Cabinet 1 Top		
2 Left Side		
3 Right Side		
4 Back		
Front Chamber 5 Load Position		
6 Moving		
7 Irradiate Position		
8 Inside Storage Compartment		

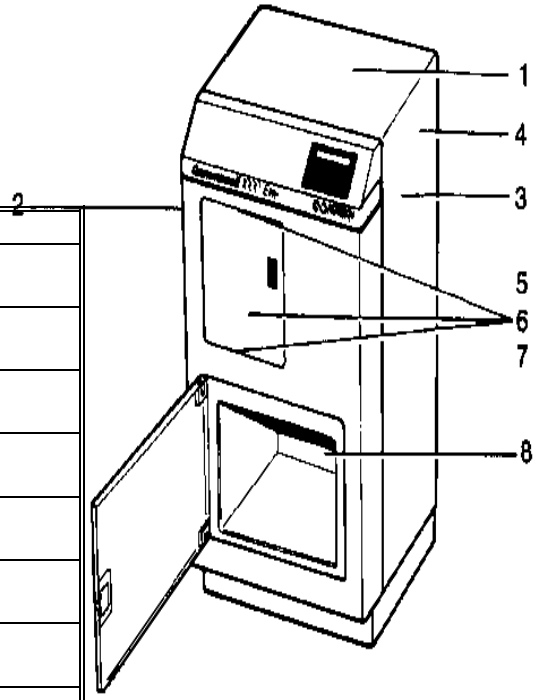

nordion

Gammacell 1000 *Elite*

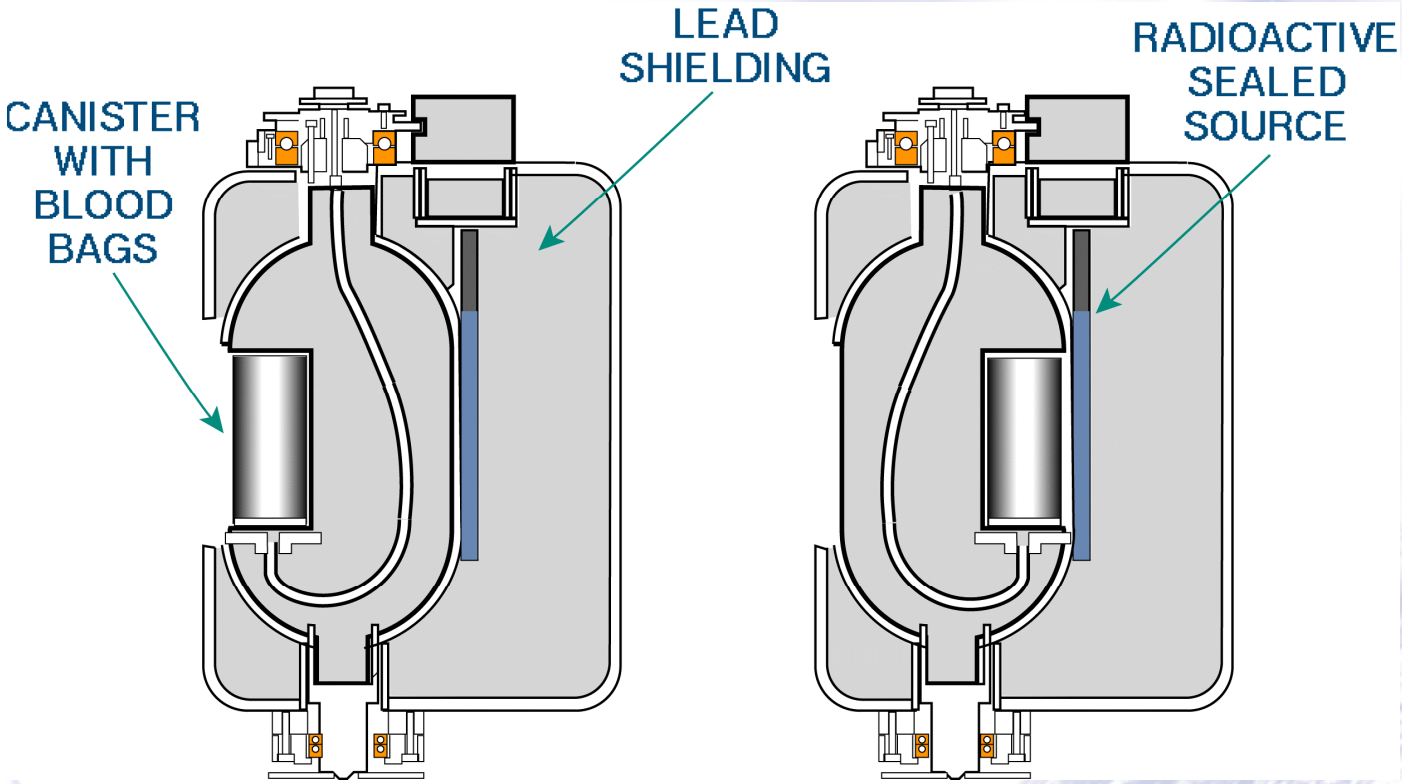

LOAD POSITION **IRRADIATE POSITION**

nordion

Gammacell 3000 *Elan*

nordion

Gammacell 3000 *Elan*

Isotope: Caesium 137

Installed weight:	**1479 kg (3260 lbs)**
Height:	**1422 mm (56 in.)**
Width:	**762 mm (30 in.)**
Length:	**660 mm (26 in.)**
Floor loading:	**2943 kg/m^2 (604 lb/ft^2)**
Power charged by:	**12V DC battery** **110/120V AC (standard)** **100V AC (optional)** **208–240V AC (optional)**

Note: An allowance of 6 inches should be provided around the unit for maintenance

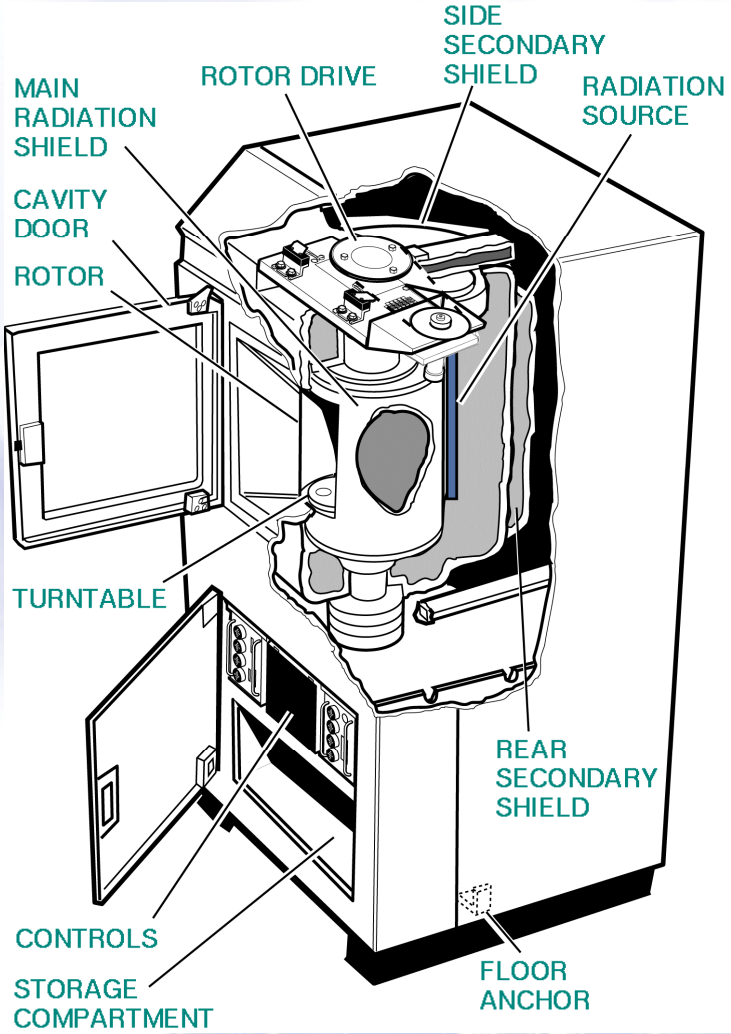

nordion

PLAN VIEW OF Gammacell 1000/3000

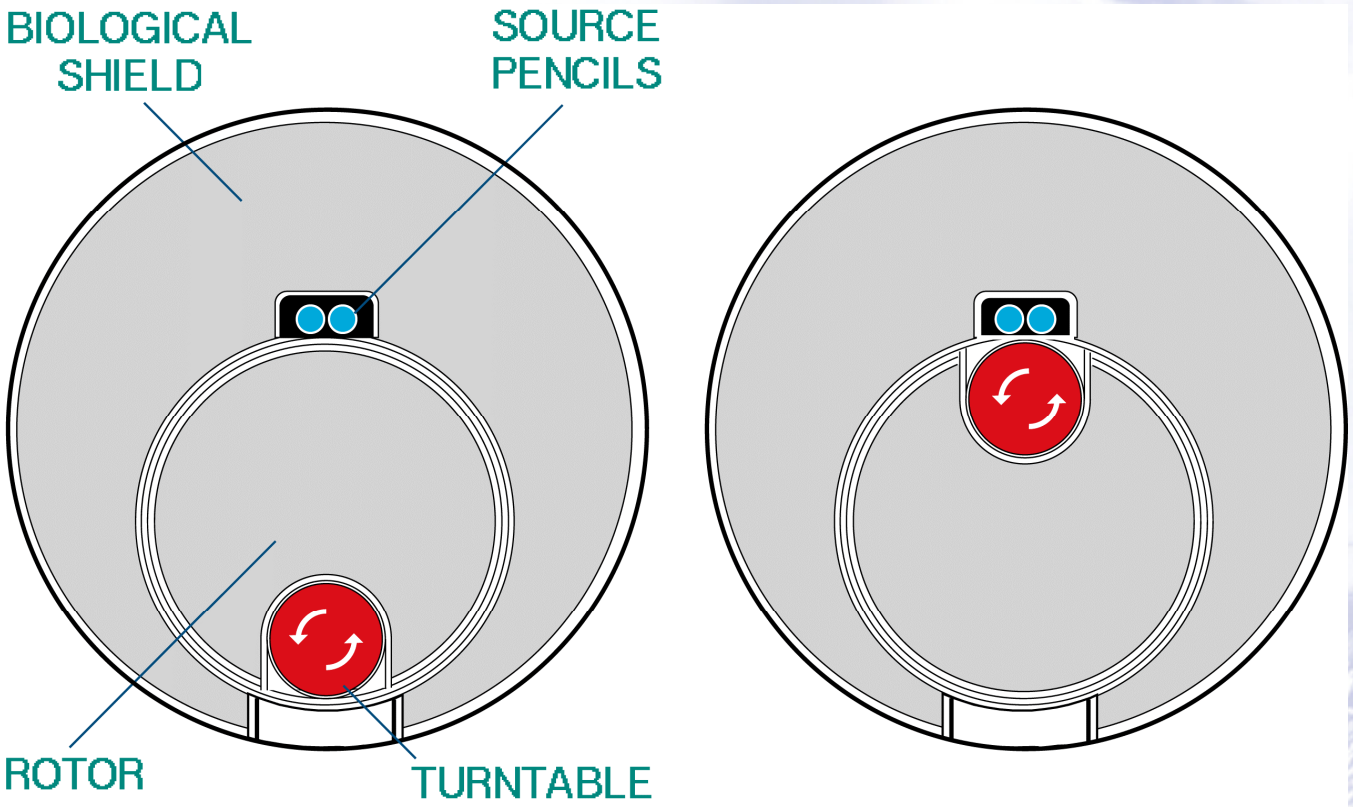

LOAD POSITION

ROTATED TO IRRADIATE POSITION

nordion

Gammacell 3000 *Elan*

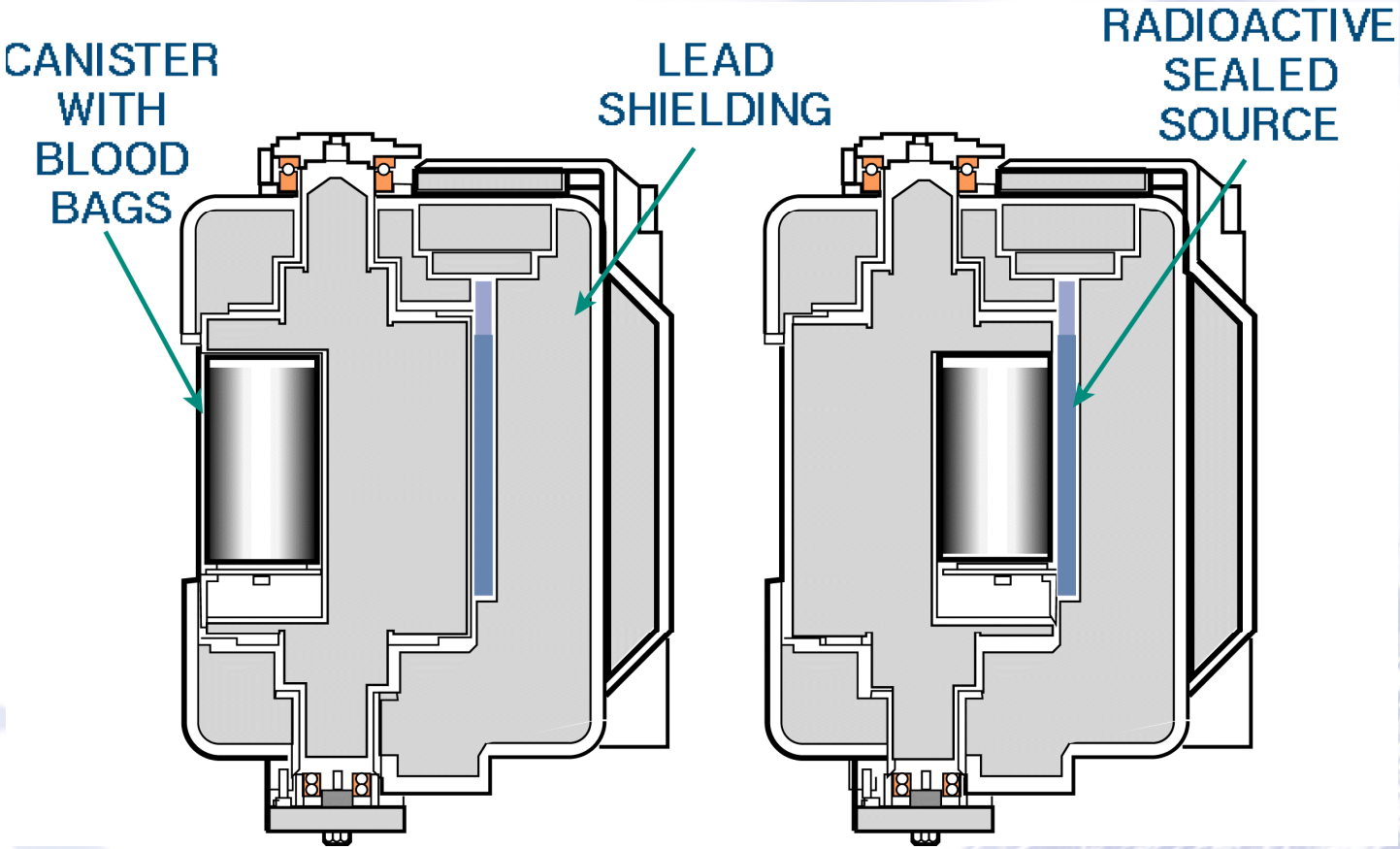

LOAD POSITION

IRRADIATE POSITION

nordion

GC-3000 Survey

Radiation Readings

Reading locations	Field s on Contact* (mrem/h)	Comments
Cabinet 1. Top		
2. Left side		
3. Right side		
4. Back		
Front Chamber 5. Load position		
6. Moving		
7. Irradiate Position		
8. Inside Storage Compartment		
9. Maximum Field During Transient Condition**		

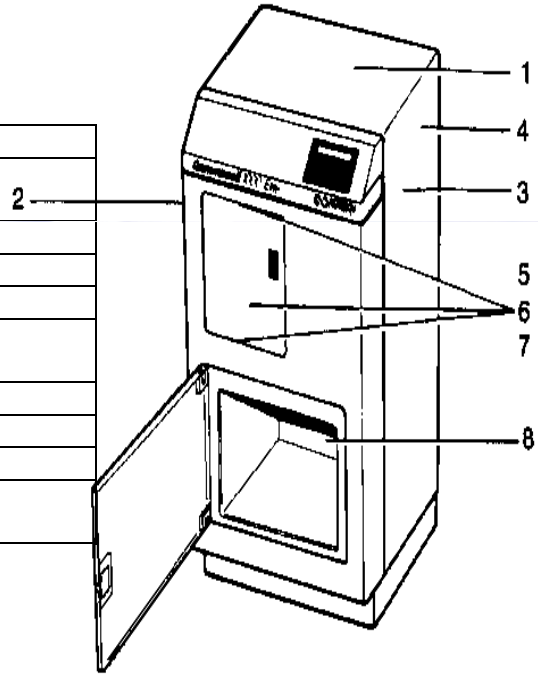

NOTE:

* *The meter on the surface is actually measuring the value approximately 5 cm from the surface. (1 mrem/h = 10 µSv/h)*

*** See Figure 1 for the rotor position which gives a maximum field. Adjust the rotor accordingly and measure field.*

nordion

Gammacell 1000/3000 CONTROL PANEL

nordion

GC-3000 Maintenance (allowed by user)

- Monthly
  - Confirm timer accuracy each month.
- Annually
  - Inspect electrical connections for looseness
  - Clean and lubricate rotor drive chain
  - Check/adjust mechanical stop on drum rotor
  - Check/adjust limit switches for rotor
  - Batteries
    - One lead acid (expected life 4 to 7 years)
    - One IBT battery (expected life 5 to 7 years)
    - One SBC battery (expected life 10 years)

nordion

GC-3000 Maintenance (allowed by user)

- Annually
  - Contamination (or per authority's schedule)
  - Survey (see manual for form)

nordion

Gammacell 1000/3000 TURNTABLE

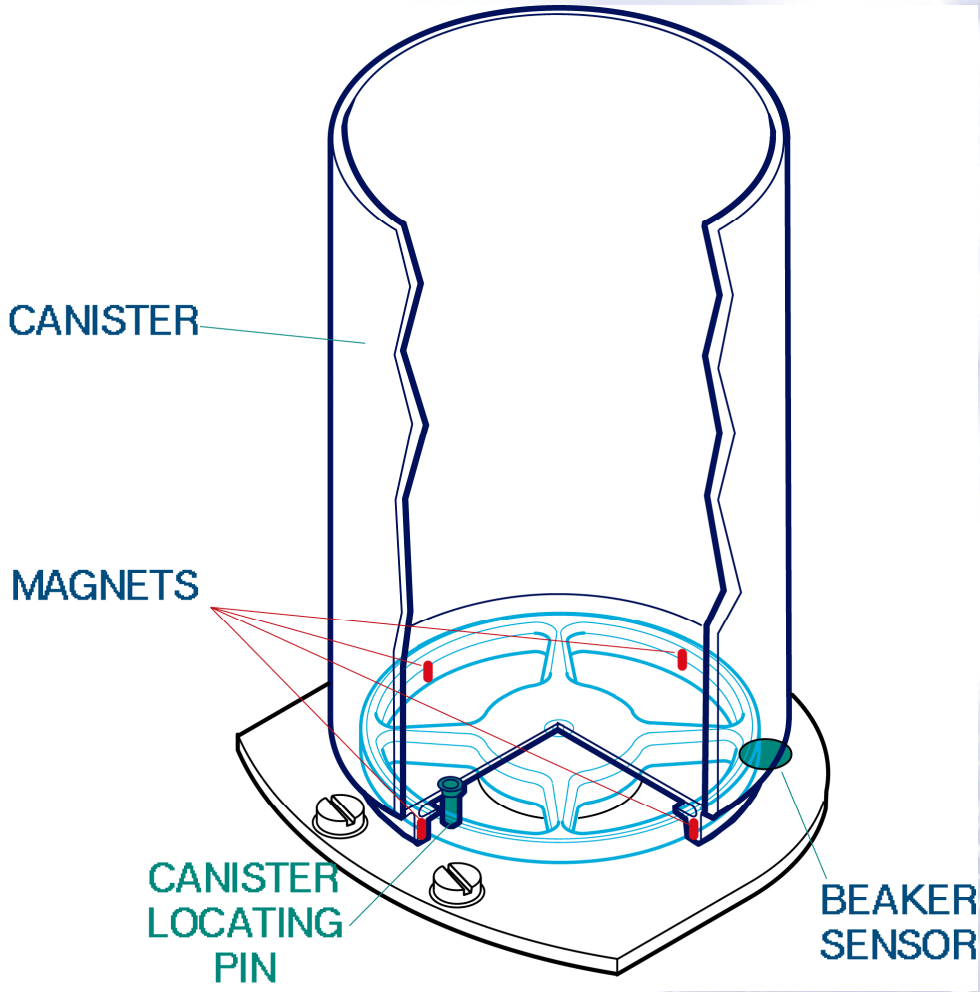

nordion

Gammacell 1000/3000 BACKUP TIMER

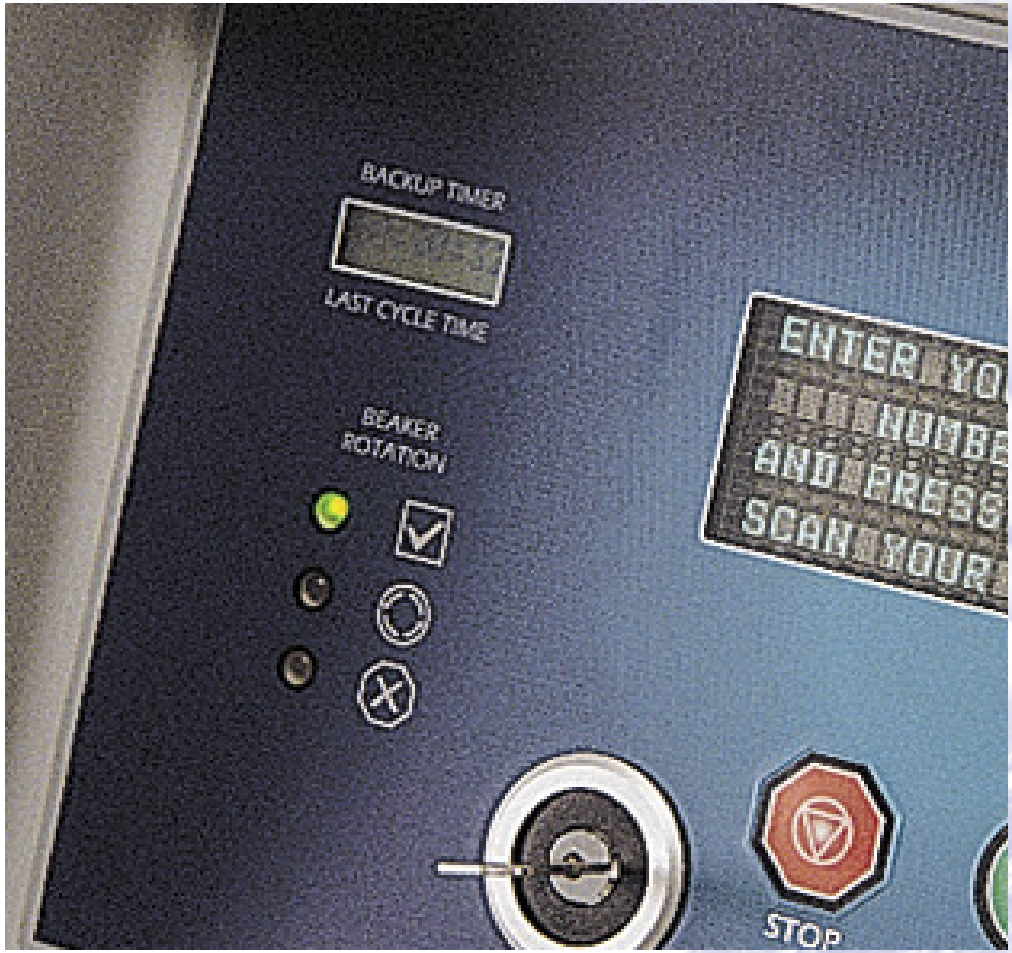

nordion

EVERY IRRADIATION CYCLE ENSURES PROCESS VALIDATION

Primary system

- Time
- Sample position
- Canister rotation

Secondary monitoring system

- Time
- Sample position
- Canister rotation

Backup monitoring system

- Time
- Sample position
- Canister rotation

nordion

TYPICAL EXTERNAL RADIATION FIELDS - GC 3000 Elan

READING LOCATION	mrem/h		µSv/h	
	MODEL I	MODEL II	MODEL I	MODEL II
TOP	0.8	1.6	8.0	16.0
LEFT SIDE	0.1	0.2	1.0	2.0
RIGHT SIDE	0.1	0.2	1.0	2.0
BACK	0.25	0.5	2.5	5.0
FRONT CHAMBER: LOAD POSITION	0.25	0.5	2.5	5.0
FRONT CHAMBER: MOVING	0.25	0.5	2.5	5.0
FRONT CHAMBER: IRRADIATE POSITION	0.25	0.5	2.5	5.0
INSIDE STORAGE	0.03	0.05	0.3	0.5

ICRP MAXIMUM ALLOWABLE RATE 20 mrem/h
RECOMMENDATIONS OF THE
INTERNATIONAL COMMISSION ON RADIOLOGICAL PROTECTION
PUBLICATION-#15, 21 & 33

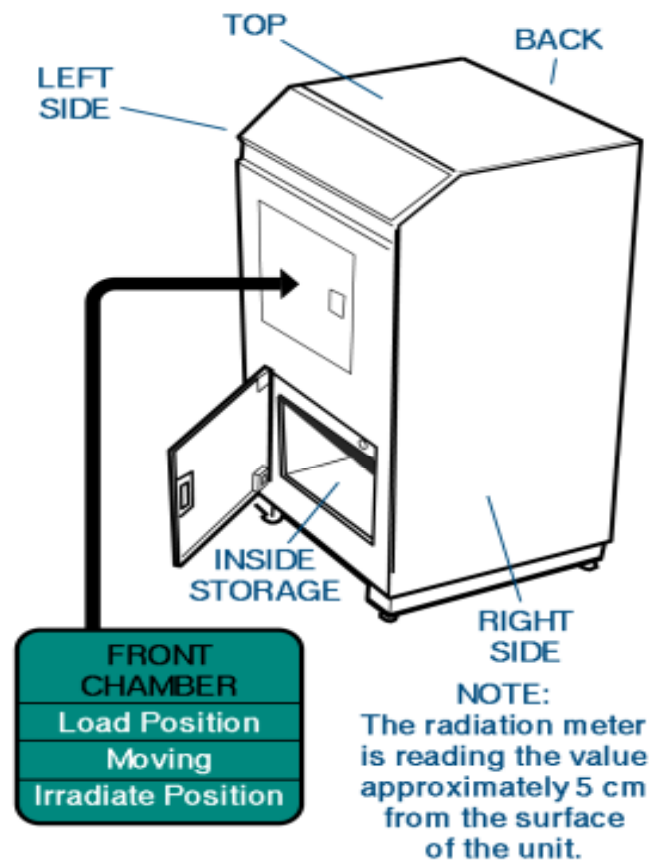

NOTE:
The radiation meter is reading the value approximately 5 cm from the surface of the unit.

(1mrem/h = 10µSv/h)

nordion

Gammacell 3000 DOSE DISTRIBUTION IN POLYSTYRENE (Blood-equivalent medium)

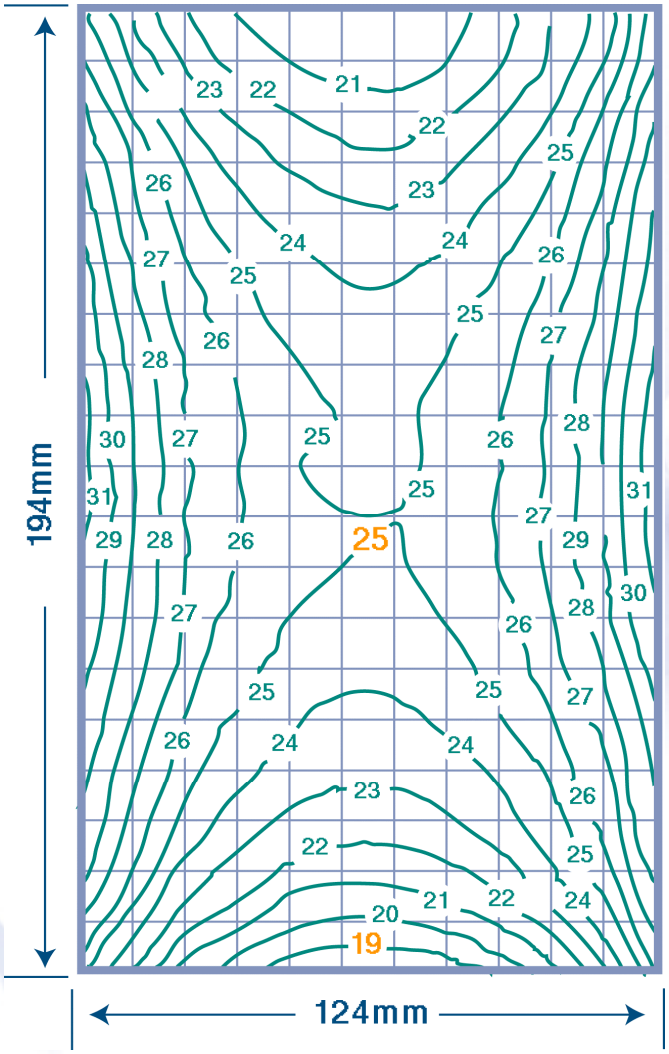

- 25 Gy targeted to centre of canister
- Absorbed-dose measurements in Gy
- 1 Gy = 100 rad = 100 cGy

nordion

Gammacell 1000/3000 ACCESSORIES

nordion

Gammacell 1000/3000 SOURCE CAPSULE

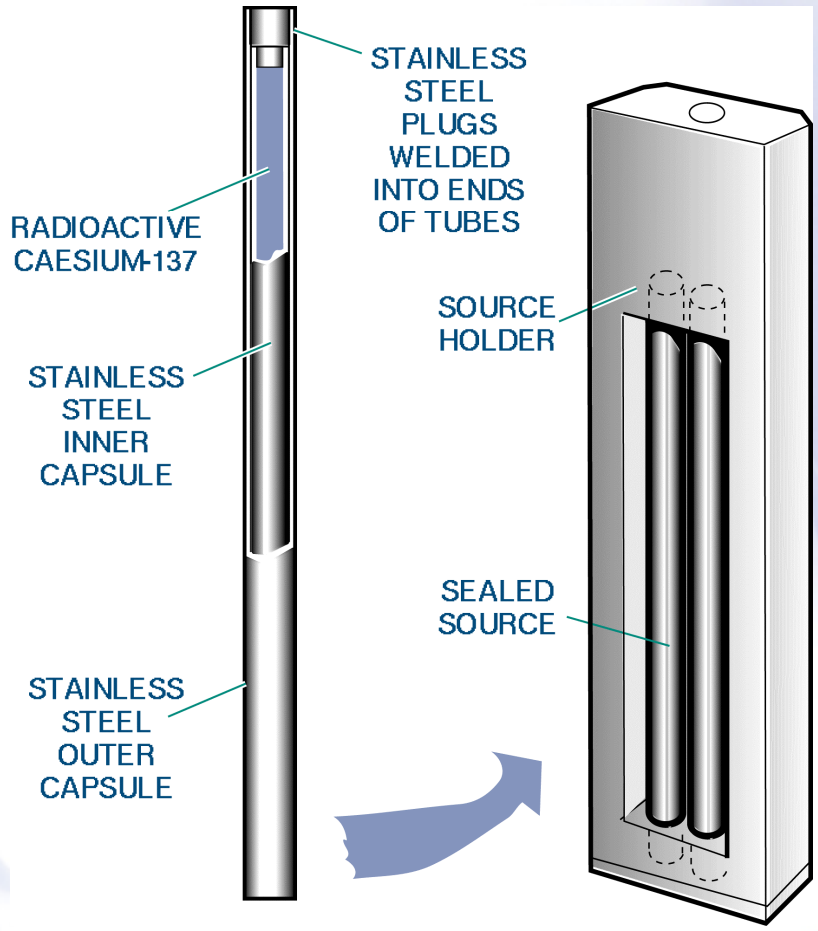

GC 1000

A-650 Ci - 4 Gy/min
I-1450 Ci - 8.5 Gy/min
II-2900 Ci - 16 Gy/min

GC 3000

I-1450 Ci - 5 Gy/min
II-2900 Ci - 9.75 Gy/min

nordion

All Gammacells now made by:

- Nordion sold its Research Irradiator manufacturing facility to:

Best Threratronics in 2008

413 March Road, Ottawa On. K2K 0E4

www.Theratronics.ca

Tel:613-591-2100