ENCLOSURE 2 TO NL-11-100

HOLTEC INTERNATIONAL LICENSING REPORT HI-2094289, REVISION 4 (NON PROPRIETARY)

Entergy Nuclear Operations, Inc.
Indian Point Units 2 and 3
Docket Nos. 50-247 and 50-286

LICENSING REPORT ON THE INTER-UNIT TRANSFER of SPENT NUCLEAR FUEL at THE INDIAN POINT ENERGY CENTER

By

Holtec International
Holtec Center
555 Lincoln Drive West
Marlton, NJ 08053
(holtecinternational.com)

Holtec Project 1775
Holtec Report No. HI-2094289
Safety Category: Safety Significant

Copyright Notice and Notice of Proprietary Information

This document is a copyrighted intellectual property of Holtec International. All rights reserved. In addition, proprietary information is either noted as proprietary or highlighted in gray. Excerpting any part of this document, except for public domain citations included herein, by any person or entity except for the USNRC, a Holtec User Group (HUG) member company, or a foreign regulatory authority with jurisdiction over a HUG member's nuclear facility without written consent of Holtec International is unlawful.

HOLTEC INTERNATIONAL

DOCUMENT NUMBER: 2094289 PROJECT NUMBER: 1775

DOCUMENT ISSUANCE AND REVISION STATUS										
DOCUMENT NAME: Licensing Report for transfer of IP-3 fuel to IP-2					DOCUMENT CATEGORY: ☐ GENERIC ☒ PROJECT SPECIFIC					
		REVISION No. 0			REVISION No. 1			REVISION No. 2		
No.	Document Portion††	Author's Initials	Date Approved	VIR #	Author's Initials	Date Approved	VIR #	Author's Initials	Date Approved	VIR #
1.	Chap 1	TSM	5/29/2009	434723	TSM	7/1/2009	836933	VG	8/16/2010	759467
2.	Chap 2	TSM	5/29/2009	59458	TSM	7/1/2009	685850	VG	8/16/2010	61765
3.	Chap 3	TSM	5/29/2009	765725	TSM	7/1/2009	407780	VG	8/16/2010	494080
4.	Chap 4	SPA	5/29/2009	341828	SPA	7/1/2009	465884	SPA	8/17/2010	55113
5.	Chap 5	DMM	5/29/2009	541521	DMM	7/1/2009	90931	IR	8/17/2010	512015
6.	Chap 6	CWB	5/29/2009	140206	VRP	7/1/2009	533871	VRP	8/17/2010	770834
7.	Chap 7	CS	5/29/2009	261166	CS	7/1/2009	60138	KB	8/17/2010	938338
8.	Chap 8	VG	5/29/2009	488015	VG	7/1/2009	159807	JDG	8/16/2010	197861
9.	Chap 9	KAP	5/29/2009	850390	KAP	7/1/2009	773001	VG	8/16/2010	899325
10.	Chap 10	TSM	5/29/2009	873968	KAP	7/1/2009	421127	JDG	8/16/2010	427022
11.	Chap 11	TSM	5/29/2009	206569	TSM	7/1/2009	86235	VG	8/17/2010	711652
12.	TOC	TSM	5/29/2009	279864	VG	7/1/2009	868752	VG	8/17/2010	426113

†† Chapter or section number.

HOLTEC INTERNATIONAL

DOCUMENT NUMBER: 2094289 PROJECT NUMBER: 1775

DOCUMENT ISSUANCE AND REVISION STATUS										
DOCUMENT NAME: Licensing Report for transfer of IP-3 fuel to IP-2					DOCUMENT CATEGORY: ☐ GENERIC ☒ PROJECT SPECIFIC					
No.	Document Portion††	REVISION No. 3			REVISION No. 4			REVISION No.		
		Author's Initials	Date Approved	VIR #	Author's Initials	Date Approved	VIR #	Author's Initials	Date Approved	VIR #
1.	Chap 1	VG	9/30/2010	303829	VG	7/25/2011	503574			
2.	Chap 2	VG	9/30/2010	76925	VG	7/25/2011	197967			
3.	Chap 3	VG	9/30/2010	77832	VG	7/25/2011	716928			
4.	Chap 4	SPA	9/30/2010	247073	SPA	7/26/2011	535271			
5.	Chap 5	AHM	9/30/2010	290462	AHM	7/25/2011	890058			
6.	Chap 6	VRP	9/30/2010	916607	CWB	7/25/2011	980010			
7.	Chap 7	KB	9/30/2010	159198	KB	7/25/2011	891629			
8.	Chap 8	JDG	9/30/2010	663065	JDG	7/25/2011	139052			
9.	Chap 9	VG	9/30/2010	631365	VG	7/25/2011	198286			
10.	Chap 10	JDG	9/30/2010	166089	JDG	7/25/2011	292632			
11.	Chap 11	VG	10/1/2010	342303	VG	7/25/2011	373877			
12.	TOC	VG	10/1/2010	665261	VG	7/25/2011	723337			

HOLTEC INTERNATIONAL

DOCUMENT NUMBER: 2094289 PROJECT NUMBER: 1775

DOCUMENT CATEGORIZATION

In accordance with the Holtec Quality Assurance Manual and associated Holtec Quality Procedures (HQPs), this document is categorized as a:

- ☐ Calculation Package[3] (Per HQP 3.2)
- ☒ Technical Report (Per HQP 3.2)(Such as a Licensing Report)
- ☐ Design Criterion Document (Per HQP 3.4)
- ☐ Design Specification (Per HQP 3.4)
- ☐ Other (Specify):

DOCUMENT FORMATTING

The formatting of the contents of this document is in accordance with the instructions of HQP 3.2 or 3.4 except as noted below:

DECLARATION OF PROPRIETARY STATUS

☒ Nonproprietary ☐ Holtec Proprietary ☐ Privileged Intellectual Property (PIP)

Documents labeled Privileged Intellectual Property contain extremely valuable intellectual/commercial property of Holtec International. They cannot be released to external organizations or entities without explicit approval of a company corporate officer. The recipient of Holtec's proprietary or Top Secret document bears full and undivided responsibility to safeguard it against loss or duplication.

Notes:

1. This document has been subjected to review, verification and approval process set forth in the Holtec Quality Assurance Procedures Manual. Password controlled signatures of Holtec personnel who participated in the preparation, review, and QA validation of this document are saved in the N-drive of the company's network. The Validation Identifier Record (VIR) number is a random number that is generated by the computer after the specific revision of this document has undergone the required review and approval process, and the appropriate Holtec personnel have recorded their password-controlled electronic concurrence to the document.

2. A revision to this document will be ordered by the Project Manager and carried out if any of its contents is materially affected during evolution of this project. The determination as to the need for revision will be made by the Project Manager with input from others, as deemed necessary by him.

3. Revisions to this document may be made by adding supplements to the document and replacing the "Table of Contents", this page and the "Revision Log".

LICENSING REPORT REVISION STATUS, LIST OF AFFECTED CHAPTERS AND REVISION SUMMARY

License Report No.: HI-2094289	**Revision Number:** 4

Report Title:	License Report for Fuel Transfer from Unit 3 SFP to Unit 2 SFP

This Report is submitted to the USNRC in support of the LAR for fuel transfer from Indian Point Unit 3 to Indian Point Unit 2 spent fuel pool.

Chapter review and verification are controlled at the chapter level and changes are annotated at the Chapter level.

A summary description of change is provided below for each chapter section. Chapter sections not listed remain at the previous revision level. Minor editorial changes to this Report are not described.

Chapter No.	Current Revision No.	Summary Description of Change
TOC	4	All changes as a result of the RAIs are shown by Rev bars
1	4	All changes as a result of the RAIs are shown by Rev bars
2	4	All changes as a result of the RAIs are shown by Rev bars
3	4	All changes as a result of the RAIs are shown by Rev bars
4	4	All changes as a result of the RAIs are shown by Rev bars

5	4	All changes as a result of the RAIs are shown by Rev bars
6	4	All changes as a result of the RAIs are shown by Rev bars
7	4	All changes as a result of the RAIs are shown by Rev bars
8	4	All changes as a result of the RAIs are shown by Rev bars
9	4	All changes as a result of the RAIs are shown by Rev bars
10	4	All changes as a result of the RAIs are shown by Rev bars
11	4	All changes as a result of the RAIs are shown by Rev bars

Revision 1 to 3:

As part of the initial Inter-Unit Fuel Transfer LAR, IPEC submitted Revision 1 of the Licensing Report on the Inter-Unit Fuel Transfer (HI-2094289) to the NRC. As a result of the NRC RAI, Holtec provided IPEC with an interim update (Revision 2) of the Licensing Report for review, comment, and approval. IPEC identified and requested certain clarifications to Revision 2 of the Licensing Report and the Licensing Report was revised accordingly to Revision 3. This revision of the report is being submitted with the response to the RAI. The revision bars shown on Revision 3 only reflect the changes that were made between Revision 2 and Revision 3 and do not reflect the changes from Revision 1 to Revision 2, as per Holtec's QA program. To assist in the NRC review the following "roadmap" of the changes and the general reason for the change is provided.

Chapter 1

Section 1.1 editorial/clarifications to text
Addition of Tables 1.1.2 through 1.1.5

Section 1.3 editorial/ clarifications to text
Figures 1.3.1 and 1.3.2 modified to reflect current design details

Section 1.4 editorial/ clarifications to text
All Figures in 1.4 modified to reflect current design details

Section 1.5 drawing numbers updated

Chapter 2

Section 2.1 – updated text to reflect the new minimum burnup requirements per the 10CFR71 burnup credit methodology (see Chapter 4). Addition of clarifying text for consistency with proposed Appendix C to the Technical Specifications.

Section 2.2 – clarification to reflect current proposed operations during the fuel transfer.

Chapter 3

Subsection 3.1.1 – updated text and references to reflect the change in criticality methodology (see chapter 4).

Subsection 3.1.4 – updated text to discuss the non-mechanistic tip-over.

Table 3.1.1 – Design temperature limits of certain materials were changed during normal and accident conditions due to design changes to the system.

Section 3.2 – Discussion on the thermal misload, non-mechanistic tipover, and large release of radioactivity were re-written based on the current analysis, design and operational procedures.

Table 3.2.1 is updated to reflect the design and accident pressures of the STC, HI-TRAC and HI-TRAC water jacket.

Table 3.2.4 - discussion on non-mechanistic tipover added.

Section 3.3 – deleted old section and add this section on STC and HI-TRAC service life.

Chapter 4

All of Chapter 4 has significant changes due to the change in criticality methodology from Part 50 to Part 71. This is summarized in the preface to chapter 4 responses in the response to the RAI.

Chapter 5

Analysis, results and discussion are updated in Chapter 5 to reflect the current design and operational procedures of the system. These include the replacement of the temperature monitoring for misload with a pressure rise monitoring (Subsection 5.3.4) and the use of steam to create a vapor space in the top of the STC rather than an air gap. Additional analysis is presented for the thermal effects of a non-mechanistic tipover event which includes the newly design centering assembly.

Subsection 5.1.1 – discussion is extended on the over-pressure protection for the STC and HI-TARC and Table 5.1.1 is added to show the effect of the water level in the HI-TRAC on the internal pressure of the HI-TRAC.

Table 5.2.9 is added with the thermal properties of steam.

Accident Section 5.4 has significant changes based on the current analysis, design and operational procedures.

Chapter 6

Analysis, results and discussion are updated in Chapter 6 to reflect the current design of the system. Additional analysis is presented for the thermal effects of a non-mechanistic tipover event (Subsection 6.2.8 and Figures 6.2.6 – 6.2.13) which includes the newly design centering assembly. Safety factors updated throughout chapter per analysis results.

Table 6.1.3 updated allowable stress and primary stress of SA-564,630 bolt material.

Table 6.1.5 updated Alloy X properties.

Table 6.1.6 is added to provide list of Code alternatives and justification for the alternatives.

Subsection 6.2.1 is updated for fatigue analysis.

Table in 6.2.3.1 updated with minimum required safety factor.

Subsection 6.2.3.4 updated to address further analysis on the HI-TRAC pool lid for sealing integrity.

Chapter 7

Chapter 7 was extensively re-written to address many of the RAIs with regard to shielding and ALARA practices and provide results of additional analysis which supports the shielding design of the system. The design of the STC lid seal was changed to be consistent with a transport package bolted with elastomeric seal. Effluent dose was re-analyzed based on this design.

Chapter 8

Section 8.2 updated to provide more information on the material properties. Specifically item (iv) which discusses Metamic neutron absorber, its acceptance criteria, and

acceptance testing and (v) which discusses the seal design and acceptance criteria (also see Table 8.2.2).

Section 8.3 updated to discuss the STC internal stainless steel weld overlay.

Subsections 8.4.3, 8.4.4 and 8.4.5 expanded to clarify pressure testing, seal leakage testing, and material testing, respectively.

Table 8.4.1 is added for fracture toughness test requirements of STC components.

Section 8.5 expanded significantly to address maintenance requirements of the system, including Metamic surveillance program.

Items in Table 8.5.1 are clarified.

Chapter 9

Section 9.1.2 for occupational exposure is updated to reflect results of analysis in Chapter 7.

Chapter 10

Throughout this chapter significant additions were made to reflect the current design and operational procedures of the system. ALARA warnings were added and specific steps that need to be monitored as part of proposed Appendix C to the IP2 and IP3 Technical Specifications are clearly indicated.

Chapter 11

References were updated as applicable, specifically references for criticality methodology.

Revision 3:

All Chapters: Editorial corrections to incorporate client (Indian Point) comments.

Table of Contents

GLOSSARY v

1.0 Introduction 1-1
1.1 Background and Overview 1-1
1.2 Summary of Proposed Action 1-22
1.3 Description of Required Equipment and their Safety Function 1-23
1.3.1 Shielded Transfer Canister 1-23
1.3.2 HI-TRAC 100D Transfer Cask 1-24
1.3.3 Vertical Cask Transporter 1-26
1.4 Inter-Unit Transfer Operations 1-29
1.5 Reference Drawings 1-49
1.6 Supplier's Qualification 1-50

2.0 Fuel Acceptance Criteria and Engineered Measures for Safety 2-1
2.1 Fuel Acceptance Criteria 2-1
2.2 Safety and Protective Measures 2-2
2.2.1 Criticality Safety through Physical Design 2-2
2.2.2 Criticality Safety through Assured Boron Concentration 2-2
2.2.3 Release Protection by Multiple Barriers 2-2
2.2.4 Protection by a Favorable Thermal-Hydraulic Environment 2-3
2.2.5 Protection by the Selection of Low Dose Emitting Fuel 2-3
2.2.6 Protection by Use of Proven Equipment 2-3
2.2.7 Protection by Material Selection 2-3
2.2.8 Reliability through Increased Structural Margins 2-4
2.2.9 Protection by Design to Prevent Inadvertent Water Loss 2-4

3.0 Principal Design Criteria, Applicable Loads, and Service Life 3-1
3.1 Governing Regulatory Requirements 3-1
3.1.1 Criticality 3-1
3.1.2 Shielding 3-2
3.1.3 Thermal 3-3
3.1.4 Structural 3-4
3.2 Applicable (Design, Normal, and Postulated Accident) Loadings 3-8
3.2.1 Design Basis Loads 3-8
3.2.2 Normal Condition Loads 3-8
3.2.3 Accident Condition Loads 3-8
3.2.4 Load Cases 3-13
3.3 STC & HI-TRAC Service Life 3-19

4.0 Criticality Evaluation 4-1
4.1 Introduction 4-1
4.2 General Methodology 4-1
4.2.1 Introduction 4-1
4.2.2 Details of Methodology 4-10
4.3 Acceptance Criteria 4-14
4.4 Assumptions 4-14
4.5 Input Data 4-16
4.5.1 Design Basis Fuel Assembly Specification 4-16
4.5.2 Core Operating Parameters 4-16
4.5.3 Axial Enrichment & Burnup Distribution 4-16
4.5.4 Fuel Basket & STC Specifications 4-18
4.6 Computer Codes 4-32
4.7 Analysis and Results 4-32
4.7.1 Fuel Assemblies, Fuel Inserts & Burnable Poison 4-32
4.7.2 Reactivity Effect of Burnup Distribution 4-39
4.7.3 Transfer of Isotopic Compositions 4-40
4.7.4 Eccentric Fuel Assembly Positioning 4-41
4.7.5 Basket Tolerances 4-41
4.7.6 Moderation & Flooding Conditions Analyzed 4-41
4.7.7 Criticality Calculations 4-42
4.7.8 Abnormal & Accident Conditions 4-43
4.7.9 Margin Analysis & Comparison with remaining Uncertainties 4-45
4.8 Acceptability of Storing Indian Point Unit 3 fuel in Indian Point Unit 2 pool 4-72

5.0 Thermal-Hydraulic Evaluation 5-1
5.0 Overview 5-1
5.1 Thermal Design 5-4
5.1.1 Over Pressure Protection 5-5
5.2 Thermal Properties of Materials 5-9
5.3 Thermal Evaluation of Fuel Transfer Operation 5-18
5.3.1 Description of the 3-D Thermal Model 5-18
5.3.2 Maximum Temperatures 5-19
5.3.3 Evaluation of STC without the HI-TRAC 5-20
5.3.4 Detection of Fuel Misload 5-20
5.4 Hypothetical Accident Evaluation 5-28
5.4.1 Jacket Water Loss Accident 5-28
5.4.2 Fire Accident 5-28
5.4.3 Simultaneous Loss of Water from the HI-TRAC Water Jacket and HI-TRAC Annulus 5-30
5.4.4 Fuel Misload Accident 5-31
5.4.5 Hypothetical Tipover Accident 5-31
5.4.6 Crane Malfunction Accident 5-32

6.0 Structural Evaluation of Normal & Accident Condition Loadings 6-1
6.0 Overview 6-1
6.1 Structural Design 6-2
6.1.1 Discussion 6-2
6.1.2 Design Criteria and Applicable Loads 6-2
6.2 Structural Analyses 6-12
6.2.1 Load Case 1: Design Pressure 6-12
6.2.2 Load Case 2: Normal Operating Pressure plus Temperature 6-17
6.2.3 Load Case 3: Normal Handling 6-17
6.2.4 Load Case 4: Fuel Assembly Drop Accident 6-23
6.2.5 Load Case 5: HI-TRAC Vertical Drop Accident 6-23
6.2.6 Load Cases 6 and 7: Seismic Stability of Loaded VCT and Loaded HI-TRAC... 6-23
6.2.7 Load Case 8: Seismic Stability of STC in the Fuel Pool 6-23
6.2.8 Load Case 9: Non Mechanistic Tipover of loaded HI-TRAC cask 6-23

7.0 Shielding Design & ALARA Considerations 7-1
7.0 Introduction 7-1
7.1 Shielding Design 7-4
7.1.1 Design Features 7-4
7.1.2 Loading Pattern 7-4
7.1.3 Acceptance Criteria 7-5
7.2 Source Specification 7-8
7.2.1 Source Term Selection 7-8
7.2.2 Principal Sources of Radiation 7-8
7.3 Shielding Model 7-19
7.3.1 Configuration of Shielding and Source 7-20
7.3.2 Material Properties 7-21
7.4 Shielding and ALARA Evaluation 7-31
7.4.1 Methods 7-31
7.4.2 Flux-to-Dose-Rate Conversions 7-33
7.4.3 External Radiation Levels – STC 7-33
7.4.4 Crane Hang Up 7-35
7.4.5 Dose to an Individual Member of Public (On-site) from STC 7-35
7.4.6 External Radiation Levels - HI-TRAC 100D Transfer Cask 7-35
7.4.7 Dose to an Individual Member of Public (on-site) 7-36
7.4.8 Effluent Dose Evaluation 7-36
7.4.9 Haul Path and Controlled Area Boundary 7-36
7.4.10 Dose Contribution to Controlled Area Boundary 7-37
7.4.11 Dose Rates from STC & HI-TRAC with NSA 7-38
7.4.12 Occupational Exposures for ALARA Considerations 7-38
7.4.13 Summary and Conclusions 7-39

8.0 Materials Evaluation, Acceptance Tests and Maintenance Program 8-1
8.1 Introduction 8-1
8.2 Materials Used 8-1
8.3 Degradation Mechanisms 8-10

8.4 Acceptance Tests 8-14
8.4.1 Visual Inspections and Measurements 8-14
8.4.2 Weld Examinations 8-14
8.4.3 Structural and Pressure Tests 8-15
8.4.4 Leakage Test 8-16
8.4.5 Component and Material Tests 8-17
8.5 Maintenance Program 8-20
8.5.1 Structural and Pressure Tests 8-20
8.5.2 Leakage Test 8-20
8.5.3 Component and Material Tests 8-22

9.0 Economic and Environmental Considerations 9-1
9.1 Environmental Considerations 9-1
9.1.1 Environmental Impacts 9-2
9.1.2 Occupational Radiation Exposure 9-3
9.1.3 Public Radiation Exposure 9-3
9.2 Economic Considerations 9-4
9.2.1 Spent Fuel Storage Options Evaluated 9-4
9.2.2 Options to Implement Dry Cask Storage at IP-3 9-5

10.0 Operating Procedures 10-1
10.0 Introduction 10-1
10.1 STC Preparation and Setup 10-5
10.1.1 STC Inspections and Checkout 10-5
10.1.2 HI-TRAC Inspections and Checkout 10-5
10.1.3 Preparation and Setup for Use 10-7
10.2 STC Fuel Loading 10-10
10.2.1 Placement of STC in the SFP 10-10
10.2.2 Fuel Handling and Loading into STC 10-11
10.2.3 Removal of STC from SFP and placement in HI-TRAC 10-13
10.3 HI-TRAC/STC Movement 10-19
10.3.1 Haul Path Inspection and Controls 10-20
10.3.2 Movement of loaded HI-TRAC on Air Pads/LPT 10-21
10.3.3 Movement of loaded HI-TRAC with VCT 10-21
10.4 STC Fuel Unloading 10-23
10.4.1 Placement of loaded STC in IP2 SFP 10-23
10.4.2 Unloading of STC 10-26
10.4.3 Removal of STC from SFP and placement in HI-TRAC 10-26
10.5 Maintenance and Off- Normal Events 10-28
10.5.1 Crane Operational Event 10-29
10.5.2 Water Inventory Control During Loading Delays 10-29
10.5.3 VCT Breakdown 10-29
10.5.4 Vertical Cask Drop Recovery Plan 10-29
10.5.5 Potential Damaged Fuel Assembly after Accident Conditions 10-30

11.0 References 11-1

GLOSSARY

AFR is an acronym for Away From Reactor

ALARA is an acronym for As Low As Reasonably Achievable.

Cask is a generic term used to describe a device that is engineered to hold high level waste, including spent nuclear fuel, in a safe configuration.

C.G. is an acronym for Center of Gravity.

Commercial Spent Fuel (CSF) refers to nuclear fuel used to produce energy in a commercial nuclear power plant.

Cooling Time (or post-irradiation decay time, PCDT) for a spent fuel assembly is the time between reactor shutdown and the time the spent fuel assembly is placed in a cask system. Cooling Time is also referred to as the "age" of the CSF.

Critical Characteristic means a feature of a component or assembly that is necessary for the component or assembly to render its intended function. Critical characteristics of a material are those attributes that have been identified, in the associated material specification, as necessary to render the material's intended function.

DBE means Design Basis Earthquake.

DCSS is an acronym for Dry Cask Storage System.

Design Life is the minimum duration for which the component is engineered to perform its intended function.

Design Specification is a document prepared in accordance with the quality assurance requirements of 10CFR72 Subpart G to provide a complete set of design criteria and functional requirements for a system, structure, or component, designated as Important to Safety, intended to be used in the operation, implementation, or decommissioning of the cask system.

Equivalent (or Equal) Material is a material whose *critical characteristics* (see definition above) meet or exceed those specified for the designated material.

Fracture Toughness is a material property that is a measure of the ability of a material to limit crack propagation under a suddenly applied load.

FSAR is an acronym for Final Safety Analysis Report under the regulations of 10CFR72 or 10CFR50. When not specifically designated, the FSAR referred to in this report is the HI-STORM 100 FSAR.

Fuel Basket means a honeycombed cavity structure with square openings that can accept a fuel assembly of the type for which it is designed.

High Burnup Fuel (HBF) is a commercial spent fuel assemb ly with an average burnup greater than 45,000 MWD/MTU.

HI-TRAC transfer cask or HI-TRAC means the transfer cask which is used to hold the STC during the inter unit transfer of fuel assem blies from Unit 3 spent fuel pool to Unit 2 spent fuel pool.

Important to Safety (ITS) means a function or condition requi red to store spent nuclear fuel safely; to p revent damage to spent nuclear f uel during handling and st orage, and to provide reasonable assurance that sp ent nuclear fuel can be received, handled, packaged, stored, transferred and retrieved without undue risk to the health and safety of the public.

Incore Grid Spacers are fuel as sembly grid spacers located within the active fuel region (i. e., not including top and bottom spacers).

Intact Fuel Assembly is defined as a fuel assem bly without known or suspected cladding defects greater than pinhole l eaks and hairline cracks, and which can be handled by norm al means. Fuel assemblies without fuel rods in fuel rod locations shall not be classified as Intact Fuel Assemblies unless dummy fuel rods are used to displace an a mount of water greater than or equal to that displaced by the original fuel rod(s).

Inter-unit transfer means transfer of SNF from IP3 fuel pool to IP2 fuel pool

IP-2 means Indian Point Unit 2

IP-3 means Indian Point Unit 3

LLNL is the acronym for Lawrence Livermore National Lab

License Life means the duration for which the system is authorized by v irtue of its certification by the U.S. NRC.

Light Water Reactor (LWR): Reactors that utilize enriched uranium and/or the so-called MOX fuel for power generation.

Low Profile Transporter (LPT) is a device for moving a loaded HI-TRAC into Unit 2 building.

Lowest Service Temperature (LST) is the m inimum metal temperature of a part f or the specified service condition.

Maximum Reactivity means the highest poss ible k-effective includ ing bias, uncertainties, and calculational statistics evaluated for the wor st-case combination of fuel basket manufacturing tolerance.

Metamic® is a trade name for an aluminum/boron carbide composite neutron absorber material qualified for use in the MPC fuel baskets and spent fuel racks. Metamic is used in the STC basket.

Minimum Enrichment is the minimum assembly average enrichment. Natural uranium blankets are not considered in determining minimum enrichment.

Moderate Burnup Fuel (MBF) is a commercial spent fuel assembly with an average burnup less than or equal to 45,000 MWD/MTU.

Multi-Purpose Canister (MPC) means the sealed canister consisting of a honeycombed fuel basket for spent nuclear fuel storage, contained in a cylindrical canister shell (the MPC Enclosure Vessel).

NDT is an acronym for Nil Ductility Transition, which is defined as the temperature at which the fracture stress in a material with a small flaw is equal to the yield stress in the same material if it had no flaws.

Neutron Shielding means a material used to thermalize and capture neutrons emanating from the radioactive spent nuclear fuel.

Neutron Sources means specially designed inserts for fuel assemblies that produce neutrons for startup of the reactor.

Non-Fuel Hardware (NFH) is defined as Burnable Poison Rod Assemblies (BPRAs), Thimble Plug Devices (TPDs), Control Rod Assemblies (CRAs), Axial Power ShapingRods (APSRs), Wet Annular Burnable Absorbers (WABAs), Rod Cluster Control Assemblies (RCCAs),Control Element Assemblies (CEAs), Neutron Source Assemblies (NSAs), water displacement guide tube plugs, orifice rod assemblies, Instrument Tube Tie-Rods (ITTRs), vibration suppressor inserts, instrument tube tie-rod and components of these devices such as individual rods.

Not-Important-to-Safety (NITS) is the term used where a function or condition is not deemed as *Important-to-Safety*. See the definition for *Important-to-Safety*.

ORNL is the acronym for Oak Ridge National Laboratory.

Planar-Average Initial Enrichment is the average of the distributed fuel rod initial enrichments within a given axial plane of the assembly lattice.

Post-Core Decay Time (PCDT) is synonymous with cooling time.

PWR is an acronym for Pressurized Water Reactor.

Reactivity is used synonymously with effective neutron multiplication factor or k-effective.

Regionalized Fuel Loading is a term used to describe an optional fuel loading strategy used in lieu of uniform fuel loading. Regionalized fuel loading allows high heat emitting fuel assemblies to be stored in fuel storage locations in the center of the fuel basket provided lower heat emitting fuel assemblies are stored in the peripheral fuel storage locations.

Service Life means the duration for which the component is reasonably expected to perform its intended function. Service Life may be much longer than the Design Life because of the conservatism inherent in the codes, standards, and procedures used to design, fabricate, operate, and maintain the component.

Short-term Operations means those normal operational evolutions necessary to support fuel loading or fuel unloading operations.

Single Failure Proof means that the handling system is designed so that a single failure will not result in the loss of the capability of the system to safely retain the load. A Single Failure Proof means that the handling system is designed so that all directly loaded tension and compression members are engineered to satisfy the enhanced safety criteria of Paragraphs 5.1.6(1)(a) and (b) of NUREG-0612.

SNF is an acronym for Spent Nuclear Fuel (also referred to as CSF).

SSC is an acronym for Structures, Systems and Components.

STP is Standard Temperature (298°K) and Pressure (1 atm) conditions.

Surface Contaminated Object (SCO) means a solid object that is not itself classed as radioactive material, but which has radioactive material distributed on any of its surfaces. See 10CFR71.4 for surface activity limits and additional requirements.

Thermosiphon is the term used to describe the buoyancy-driven natural convection circulation of Coolant to reduce the temperature of the spent nuclear fuel.

Shielded Transfer Canister (STC) means a thick walled cylindrical container that is compatible with the HI-TRAC transfer cask and serves as the enclosure for wet transfer of the IP3 fuel to IP2 pool.

Vertical Cask Transporter (VCT) is used for vertical handling and on-site moving of the loaded or empty HI-TRAC transfer cask.

ZPA is an acronym for Zero Period Acceleration.

ZR means any zirconium-based fuel cladding material authorized for use in a commercial nuclear power plant reactor. Any reference to Zircaloy fuel cladding applies to any zirconium-based fuel cladding material.

CHAPTER 1: INTRODUCTION

1.1 Background and Overview

Indian Point Unit 2 (IP-2) and Indian Point Unit 3 (IP-3) are Westinghouse Pressurized Water Reactors (PWR) co-located in Buchanan, NY, approximately 40 miles north of New York City. The two plants IP-2 and IP-3 were designed by the same architect/engineer and were built by the same construction company during the same period. Both plants operate using the same PWR fuel assembly type. Together, IP-2 and IP-3 comprise the Indian Point Energy Center (IPEC), owned and operated by Entergy. Both units' spent fuel pools (SFP) were re-racked in the late 1980s to maximize their in-pool storage capacities.

IP-2, which began operation two years prior to IP-3, began transferring its Spent Nuclear Fuel (SNF) from the SFP into dry storage employing the HI-STORM 100 System (USNRC Docket 72-1014) at an on-site Independent Spent Fuel Storage Installation (ISFSI) in 2007. As of August 2010, about 224 spent fuel assemblies have been placed in dry storage in HI-STORM 100 Systems and additional fuel assemblies continue to be placed in dry storage at IP-2. Transfers from wet storage into dry storage are planned to be carried out at approximately one year intervals. It should also be noted that in August 2008, 160 fuel assemblies from the Indian Point Unit 1 SFP were also placed into dry storage at this ISFSI using five (5) modified HI-STORM 100 Systems (see Certificate of Compliance 1014, Amendment 4).

The IP-2 Fuel Storage Building (FSB) required a significant structural upgrade to make it suitable for placing the fuel into dry storage. Prior to the start of the project the building crane was rated at 40 tons and was classified as non-single failure-proof. A facility must have a crane rated to at least 100 tons to load the multi-purpose canisters (MPCs) which contain 32 PWR fuel assemblies, and all lifts are required to be either single failure proof or supplemented with redundant drop protection features designed to protect against heavy load drops. Upgrading the IP-2's crane capacity to 100 tons and to single-failure proof required a whole new gantry, trolley and control system, along with a whole new sub-grade support system. The resulting structural modification effort in the IP-2 FSB was both long and costly and involved hard-rock excavations immediately adjacent to safety-significant structures and equipment. The cask loading infrastructure at IP-2 is now operationally sound and proven through repeated use.

The need to begin defueling the IP-3 SFP is now imminent, after the spring 2011 refueling outage; IP-3 will have lost the ability to refuel due to limited storage capacity in the IP-3 SFP.

As the considerations of credible options for achieving the reduction of IP-3's inventory in Chapter 9 indicate, the wet transfer of fuel from the IP-3 SFP to the IP-2 SFP is the safest, most consistent with ALARA, most environmentally benign, and most economical option. It has been determined that a wet transfer from the IP-3 SFP to the IP-2 SFP, with a maximum of 12 fuel assemblies per transfer, can be carried out in full compliance with all safety predicates of 10 CFR 50 without undertaking a major structural modification of the IP-3 FSB in the manner of IP-2. The existing 40 ton crane which is currently not single failure proof will be replaced with a 40

HOLTEC INTERNATIONAL COPYRIGHTED MATERIAL

ton single failure proof crane, and the loading on the building structure will remain within the originally engineered limits. The replacement of the crane is not part of the LAR and will be implemented pursuant to the provisions of 10 CFR 50.59.

A Shielded Transfer Canister (STC) has been designed to hold the fuel in a wet environment while being transferred between the IP-3 SFP and the IP-2 SFP. The STC will be moved a distance of about 300 yards between the IP-3 and IP-2 FHBs using two major pieces of equipment that have been successfully used to move loaded Holtec MPCs containing 32 spent fuel assemblies for the IP-2 dry storage program. These are:

i. the HI-TRAC 100D Transfer Cask (HI-TRAC), and

ii. the on-site Vertical Cask Transporter (VCT).

Therefore, the STC and any supporting ancillary equipment are the only new pieces of capital equipment required for the inter-unit fuel transfer.

The STC is placed in the HI-TRAC for movement from IP-3 to IP-2 by the VCT at the speed of approximately 1/2 mile per hour (typical of on-site transporters). The unique features of this transfer are:

i. The STC features a Code-compliant, bolted closure lid which is sealed using elastomeric seals. The lid is designed to meet the stress limits of the ASME Code, Section III, Subsection ND. This seal will be tested to the "leaktight" criterion in accordance with ANSI N14.5 as discussed in Chapter 8. The fuel in the STC is in the same thermal-hydraulic environment as the pool (i.e., no risk of thermal shock to the fuel).

ii. The top of the HI-TRAC has a solid, bolted lid which is sealed using an elastomeric seal. It is designed to meet the stress limits of the ASME Code, Section III, Subsection NF. The bottom lid of HI-TRAC is also equipped with an elastomeric seal.

This packaging arrangement has the explicit consequence of establishing a high-integrity barrier against the leakage of contaminated water to the open air. In fact as the information assembled in Table 1.1.1 indicates, the loaded STC placed in the HI-TRAC and moved by the VCT provides a level of protection that is comparable to that engineered in the plant's wet storage system.

Prior to the compilation of this report, it was necessary to identify the regulatory regimen under which NRC's approval of these planned activities should be requested. The licensing organizations of Holtec International and Entergy concluded that the proposed activity most appropriately belongs to the amendment process under 10CFR 50. The alternative of using Part 72 is inappropriate because Part 72 is applicable only to a program that entails dry fuel storage at an ISFSI. The alternative of securing a Part 71 transportation certificate was also considered and rejected because such a license applies to handling and preparing a package intended for the transportation of radioactive material, outside the confines of a licensee's facility or authorized place of use. On the other hand, an in-depth review of the work effort in the proposed inter-unit

HOLTEC INTERNATIONAL COPYRIGHTED MATERIAL

transfer indicated the requirements of 10CFR 50 apply. The principal essential operational characteristics of the inter-unit transfer project that make it necessary to seek an amendment under Part 50 are:

i. The fuel is always maintained in a wet environment.

ii. The criticality safety of fuel in a wet environment is fully addressed in Part 50.

iii. The heavy load handling evolutions will be confined to the Part 50 structures of the two FSBs (both within the purview of Part 50).

iv. All credible fuel handling accidents and their consequence to the plants' charcoal filter's effectiveness and HVAC system must be treated in accordance with NRC publications such as the Generic Letter 78-11 OT Position paper [F.A].

v. No activity will occur outside the site's protected area. As required under 10CFR50, the security provisions of Part 73 and SNM control per Part 74 will apply without limitation.

vi. The transfer of the spent nuclear fuel assemblies between the two fuel pools is permitted under 10CFR 70.42, which is compatible with the overarching requirements of 10CFR 50.

However, in addition to mandating 10CFR 50 regulations, supplemental requirements from other regulations such as Part 72 are invoked if a specific requirement is not explicitly provided in the Part 50 documents and is determined by Holtec International and Entergy to be desirable for reinforcing the design and acceptance criteria germane to the safety features of the planned work effort.

This Licensing Report provides a summary of all analyses and evaluations performed to establish that the inter-unit transfer process meets all criteria discussed in Chapter 3.

The object of this Licensing Report is to provide the substantiating information to NRC NRR in support of two amendments as follows:

i. An amendment to IP-3 Technical Specifications to load spent fuel into the STC for transfer to IP-2 and;

ii. An amendment to IP-2 Operating License and Technical Specifications to receive and unload the fuel from the STC.

A series of chapters in this Licensing Report provide the necessary technical information in support of these amendments.

The following convention is used in the organization of chapters:

i. A chapter is identified by a whole numeral, e.g. Chapter 3.

HOLTEC INTERNATIONAL COPYRIGHTED MATERIAL

ii. A section is identified by two numerals separated by one decimal, e.g., Section 3.1 is a section in Chapter 3.

iii. A subsection is identified by three numerals separated by two decimals, e.g., Subsection 3.2.1 is a subsection in Section 3.2.

iv. A paragraph is identified by four numerals separated by three decimals, e.g., Paragraph 3.2.1.1 is a paragraph in Subsection 3.2.1.

v. All figures, tables and references cited are identified by three numerals separated by two decimals, m.n.i, where "m" is the chapter number, "n" is the section number, and "i" is the sequential number. For example, Figure 1.2.3 is the third figure in Section 1.2 of Chapter 1.

Revisions to this document are made at the chapter level. Tables and figures associated with a section are placed after the text narrative. Complete chapters are replaced if any material in the chapter is changed. The specific changes are appropriately annotated with revision bars in the right margin. Drawing packages are controlled separately within the Holtec QA program and have individual revision numbers. If a drawing is revised in support of the current revision, that drawing is included in Section 1.5 at its latest revision level.

Chapter 11 contains the generic industry and Holtec produced references which may have been consulted in the preparation of this document. Where specifically cited, the identifier is listed in the text or table as "[A.A]". Active Holtec Calculation Packages which are the repository of all relevant licensing and design basis calculations are annotated as "latest revision".

HOLTEC INTERNATIONAL COPYRIGHTED MATERIAL

Table 1.1.1 Engineered Safety Features including Barriers between the Fuel and the Ambient Environment			
	Engineered Feature	**During Inter-Unit Transfer in STC and HI-TRAC 100D Transfer Cask**	**During Storage in the Spent Fuel Pool**
1.	Is the fuel surrounded by Borated water to mitigate reactivity?	Yes	Yes
2.	Is the fuel protected from external environmental loadings such as tornado missiles?	Yes, by the HI-TRAC Transfer Cask equipped with the Bottom Missile Shield	Yes, by the Spent Fuel Storage Pit
3.	Is the fuel maintained in a cooled state?	Yes, by Borated water at equilibrium below saturation temperature	Yes, by Borated water and Fuel Pool Cooling and Cleanup System
4.	Is there a risk of an uncontrolled lowering of the load in the Fuel Storage Building?	No, the cask crane will be single-failure-proof.	N/A
5.	Is there a credible accident scenario for boiling of water?	No, evaluated in this Licensing Report	Yes, evaluated in the plant's UFSAR

HOLTEC INTERNATIONAL COPYRIGHTED MATERIAL

The component description (Section 1.3), fuel transfer operations (Section 1.4), applicable loadings (Section 3.2), acceptance criteria (Chapter 2), and analyses to quantify margins of safety under all applicable loadings (Chapters 6 & 7) in this report are herewith supplemented by Table 1.1.2, which provides the performance requirements of the sub-components of the STC and HI-TRAC in accordance with GDC-61 and 62. Table 1.1.3 provides the failure mode effects analysis for possible equipment failures associated with the fuel transfer.

Table 1.1.4 identifies the postulated accidents or initiating conditions and discusses the resultant effects. Table 1.1.5 is provided to indicate the HI-STORM 100 FSAR Revision and applicable sections for each citation of the HI-STORM 100 FSAR in this licensing report.

HOLTEC INTERNATIONAL COPYRIGHTED MATERIAL

Table 1.1.2 Performance Requirements of the HI-TRAC and STC			
No	Equipment	GDC Criterion	Performance Requirements
1	STC pressure vessel	61 (1), (2), (3)	Maintain structural integrity Provide shielding Maintains water in the STC cavity Protects fuel
2	STC basket	62	The stainless steel basket maintains the fuel in a sub-critical geometry. The metamic neutron absorber panels maintain the sub-criticality of the fuel.
3	STC seal, and vent and drain connections and cover plates	61 (1), (3), (5)	Maintains water in STC
4	HI-TRAC with Bottom Missile Shield and HI-TRAC/STC Centering Assembly Installed	61 (1), (2), (3), (5)	Maintain structural integrity Provide shielding Maintains water in the annulus space Protects fuel
5	HI-TRAC Water Jacket	61 (2), (4)	Provides shielding Provides heat transfer mechanism
6	HI-TRAC pool lid seal and drain plug	61 (1), (3), (5)	Maintains water in HI-TRAC
7	HI-TRAC top lid seal and recessed vent port	61 (1), (3), (5)	Maintains water in HI-TRAC

Table 1.1.3 Failure Modes and Effects Analysis				
No	Equipment	Mode of Failure	Effect	Mechanism to prevent failure/analysis of event
1	STC Lid Seal	Loss of seal integrity	Loss of pressure in STC possibly resulting in boiling	Testing of lid seal prior to transfer in accordance with ANSI N14.5 as discussed in Chapter 8 ensures functionality of the STC seal. STC lid seal is leak tested to the "leaktight" criterion of ANSI N14.5.
2	STC vent and drain connections	Release from vent and drain connections	Loss of pressure in STC possibly resulting in boiling	The STC vent and drain connections are only used to maintain temporary confinement while the cover plates are installed. Loss of pressure is not a concern during fuel transfer as confinement is provided by the cover plates and O-ring seals. The cover plate seal is leak tested prior to transfer. The cover plates are flush to the lid to prevent damage that could affect the sealing function.
3	STC drain tube	Mechanical failure	Improper vapor space in STC established resulting increased pressure in STC	Inspect drain line as part of lid inspection prior to installation for any blockage. See Table 1.1.4 Item 14 for more discussion.
4	STC vent and drain cover plates	Release from vent and drain cover plates	Loss of pressure in STC possibly resulting in boiling	Testing of the vent and drain cover plate seals prior to transfer in accordance with ANSI N14.5 as discussed in Chapter 8 ensures functionality of the vent and drain cover plate seals.
5	HI-TRAC top lid seal and vent port	Loss of seal integrity or any release from vent port	Loss of pressure in HI-TRAC possibly resulting in boiling in the annular space	Testing of seal prior to transfer in accordance with ANSI N14.5 as discussed in Chapter 8 ensures functionality of the HI-TRAC seal. During the testing of the HI-TRAC seal, while the HI-TRAC cavity is pressurized, the vent port will be closed and monitored to ensure no pressure loss.

HOLTEC INTERNATIONAL COPYRIGHTED MATERIAL

Table 1.1.3 Failure Modes and Effects Analysis				
No	Equipment	Mode of Failure	Effect	Mechanism to prevent failure/analysis of event
6	HI-TRAC pool lid seal and drain plug	Release of seal/plug resulting in loss of water in annulus space	Reduction in heat transfer and shielding	The pool lid seal is designated as safety related and will be purchased in accordance with an approved specification and supplied by an approved vendor. Plugs will meet the requirements of ASME Code Section III, Subsection ND. Prior to its initial use the HI-TRAC is tested in accordance with ASME Code ND-6000 as discussed in Chapter 8 to ensure acceptability of the HI-TRAC pool lid seal and drain plug. Prior to each campaign the empty HI-TRAC will be tested in accordance with ANSI N14.5 and the pool lid seal and plug will be visually inspected for water leakage. Prior to each transfer the HI-TRAC pool lid seal and the drain plug shall be visually examined for water leakage.
			Loss of contaminated water from the HI-TRAC annulus	The HI-TRAC pool lid seal is an elastomeric seal, conservatively specified to provide a high degree of assurance of sealing function under normal and accident conditions. The HI-TRAC drain will be closed with a threaded plug. Both of these will be inspected prior to each fuel transfer. In addition, analysis in Chapter 6 demonstrates that even if in the most extreme condition (non-mechanistic tipover) the STC, HI-TRAC, and the respective seals will remain intact and continue to confine the loaded contents making a loss of contaminated water non-credible.
7	HI-TRAC water jacket relief device	Inadvertent opening of the relief device.	Loss of water shielding in HI-TRAC.	The dose increase as a result of the loss of the water jacket shielding is negligible as discussed in Chapter 7.
			Loss of water conduction path to environment	This event is discussed in Chapter 5. The effect on the thermal performance is negligible as discussed in Chapter 5.
			Increase STC and HI-TRAC cavity pressure	STC and HI-TRAC cavity pressure remains below the design pressure limits as discussed in Chapter 5.

HOLTEC INTERNATIONAL COPYRIGHTED MATERIAL

Table 1.1.3 Failure Modes and Effects Analysis				
No	Equipment	Mode of Failure	Effect	Mechanism to prevent failure/analysis of event
8	HI-TRAC Water jacket relief device	Failure to open at required pressure	Over-pressurization of water jacket with subsequent loss of water shielding in HI-TRAC	Bounded by inadvertent opening of the water jacket relief device. See No. 7 above.
9	VCT breakdown	Mechanical failure	Increase to site boundary dose	The limiting duration for an abnormal fuel transfer is 30 days. The postulated event would be a VCT breakdown occurring one time in a campaign, essentially once per year. It is reasonable to assume that the VCT could be repaired or that another VCT could be secured from another site within 10 days, so the HI-TRAC could be moved to a fuel handling building and unloaded within this time. The dose increase to the site boundary is negligible as discussed in Chapter 7.
10	Crane	Mechanical or electrical failure	Loss of water in STC, increased occupational dose	The crane will always have the ability to operate manually to lower the loaded STC and also move it side to side. If the STC is above the pool it can be manually lowered back into the pool. If the STC has already been moved south of the pit wall and lowered below the pool elevation , it can be manually aligned over the HI-TRAC and lowered into it. These operations are estimated to take no more than 4 hours to complete. A significant pressure rise under the postulated event is not credible since the STC lid isn't bolted which provides a small gap in the lid while it is attached to the crane. There is sufficient time to boil margin to implement corrective actions prior to STC reaching boiling temperature. It is possible that there could be fuel misload in addition to crane malfunction, however the probability of the two concurrent accidents is very low. Even in the remote event of a crane malfunction coincident with the fuel misload, the thermal evaluation of this scenario is bounded by the fuel misload which is discussed in No. 2 in Table 1.1.4. The time required for the STC cavity water to reach boiling point is 17.8 hrs in the mean time the crane can be manually lowered.

HOLTEC INTERNATIONAL COPYRIGHTED MATERIAL

Table 1.1.4 Accident/Initiating Events and the Resultant Effects			
No.	Accident/Initiating Events	Effect	Discussion
1.	Misloading of a fuel assembly which does not meet the design basis decay heat limits.	<u>Before STC is sealed</u> Increase in the total STC heat load possibly causing steaming and loss of water from the cavity resulting in uncovering the fuel inside the STC cavity.	Redundant administrative procedures in place will make the occurrence of a fuel misload unlikely. The time required for the STC cavity water to reach boiling point is 17.8 hrs if a fuel misload of 19.2 kW occurs.
		Increase dose rate from STC.	A radiation survey will be performed on STC lid when removing it from the SFP (Chapter 10). If dose exceeds the expected dose rates in Chapter 7, the STC will be lowered back into the SFP. The fuel assemblies will be re-verified to ensure a misload has not occurred.
		<u>After STC is sealed</u> Increase in the total STC heat load causing increased pressure inside the STC cavity.	Once the STC is placed in the HI-TRAC, the lid is sealed and the required vapor space is established. The internal STC pressure is monitored for a minimum period of 24 hours. This ensures that the pressure, and therefore heat load, is below the design basis value before the fuel transfer as discussed in Chapter 5. If the pressure is higher than that allowed in the established limiting condition of operations, the STC will be vented, flushed (if necessary), and returned to the spent fuel pool.

Table 1.1.4 Accident/Initiating Events and the Resultant Effects			
No.	Accident/Initiating Events	Effect	Discussion
2.	Crane malfunction while moving STC from SFP to HI-TRAC with misloaded fuel assemblies which does not meet the design basis decay heat limits.	Increase in the total STC heat load possibly causing steaming and loss of water from the cavity resulting in uncovering the fuel and increased pressure inside the STC cavity.	The probability of fuel misload (thermal) accident (based on discussion above) and a crane failure accident occurring concurrently is unlikely. However, a defense-in-depth evaluation was performed. This evaluation determined the time required for the water inside the STC to reach boiling point if there is a fuel misload concurrent with the crane failure. The total assumed misload heat load is 19.2 kW (double the design basis heat load) and an initial water temperature of 100°F. The time required for the STC cavity water to reach boiling point is 17.8 hrs.
		Increase dose rate from STC.	The crane will have the ability to operate manually to lower the loaded STC and also move it side to side. If the STC is above the pool it can be manually lowered back into the pool. If the STC has already been moved south of the pit wall and lowered below the pool elevation, , it can be manually aligned over the HI-TRAC and lowered into it. These operations will be proceduralzed and are estimated to take no more than 4 hours to complete. Therefore there is sufficient time to navigate the crane manually to bring the STC into the SFP or HI-TRAC where cooling and/or water addition will maintain the water in the STC cavity.

Table 1.1.4 Accident/Initiating Events and the Resultant Effects			
No.	Accident/Initiating Events	Effect	Discussion
3.	Drop of loaded HI-TRAC	Release of HI-TRAC pool lid seal causing loss of water from the HI-TRAC cavity annulus which results in reduction of shielding and heat transfer.	The maximum height above a supporting surface which the loaded HI-TRAC can be lifted without the redundant drop protection is limited to 6 inches. The lift height of the loaded HI-TRAC will be controlled as it is raised on the VCT to ensure this limit is not exceeded. Once the locking pins are engaged, attaching the HI-TRAC to the VCT and providing redundant drop protection, the lift height/carry is no longer limited and a drop accident during this part of the transfer is not credible. A drop of the loaded HI-TRAC from the maximum lift height limit is presented in Load Case 5 in Chapter 6. It shows that the HI-TRAC will not breach and cause a loss of water from the water jacket or the STC/HI-TRAC annulus space. However, a defense-in- depth bounding Thermal analysis with loss of water from the annulus and the water jacket has been performed and presented in Chapter 5.
4.	Tip-over	HI-TRAC tipover during the transfer operation causing loss of water from the HI-TRAC annulus or the STC cavity which results in reduction of shielding and heat transfer.	The stability of the HI-TRAC has been analyzed while it is connected to the VCT and resting on the fuel handling building floor under all extreme conditions and shown to remain upright. Nevertheless, a tipover analysis of the loaded HI-TRAC has been performed for defense-in-depth. The HI-TRAC and STC remain sealed as discussed in Chapter 6. The peak temperatures and internal pressures of the STC and HI-TRAC remain below the accident design limits as discussed in Chapter 5.

Table 1.1.4 Accident/Initiating Events and the Resultant Effects			
No.	Accident/Initiating Events	Effect	Discussion
5.	Earthquake	HI-TRAC tipover during the transfer operation causing loss of water from the HI-TRAC annulus or the STC cavity which results in reduction of shielding and heat transfer.	The stability of the HI-TRAC has been analyzed while it is connected to the VCT and resting on the fuel handling building floor under earthquake loadings. The accident analyses show that there will be no tipover of the HI-TRAC resulting in the loss of the annular water at any time during the transfer operation. (Section 6.2.6). Nevertheless, a non-mechanistic tipover event has been considered, see item 4 above.
6.	Environmental loadings	HI-TRAC tipover during the transfer operation causing loss of water from the HI-TRAC annulus or the STC cavity which results in reduction of shielding and heat transfer.	The loadings from an extreme environmental phenomena, such as high winds, tornado, and tornado-borne missiles, as specified for the 48 contiguous states in Reg. Guide 1.76, ANSI 57.9, and ASCE 7-88, are considered in the certification of HI-TRAC 100D in Docket No. 72-1014. These loadings bound the environmental loadings at IPEC. The Bottom Missile Shield has been designed to protect the HI-TRAC flanged joint from impulsive or impactive loads due to an incident tornado missile. The tornado missile strike directed to the HI-TRAC bottom flange joint is considered in Case #12 in Table 1.1.4. The BMS will be attached to the HI-TRAC for all fuel transfer evolutions. Nevertheless, a non-mechanistic tipover event has been considered, see item 4 above.
7.	Flood	HI-TRAC tipover during the transfer operation causing loss of water from the HI-TRAC annulus or the STC cavity which results in reduction of shielding and heat transfer.	Based on the topography of site, a flood causing a tipover is not credible. The IP-2 and IP-3 FSB truck bay and transport haul path are well above the lowest building elevation and would require a rise in the river of over 55 feet to cause flooding; therefore the effect of the flood on the VCT is not considered credible and is not specifically analyzed. Nevertheless, a non-mechanistic tipover event has been considered, see item 4 above.

HOLTEC INTERNATIONAL COPYRIGHTED MATERIAL

Table 1.1.4 Accident/Initiating Events and the Resultant Effects			
No.	Accident/Initiating Events	Effect	Discussion
8.	Roadway collapse	HI-TRAC tipover during the transfer operation causing loss of water from the HI-TRAC annulus or the STC cavity which results in reduction of shielding and heat transfer.	Roadway has been evaluated to ensure no collapse under the pressure of the loaded VCT. Nevertheless, a non-mechanistic tipover event has been considered, see item 4 above.
9.	Misloading assemblies	Criticality accident	Two misloading conditions have been analyzed specifically in Chapter 4. Both scenarios consider loading multiple assemblies that do not meet the burnup requirements of the basket. One considers loading twelve slightly under-burned assemblies, and the other considers loading four assemblies that may have been in the core only for one cycle in the center four cells. Without credit for the presence of the soluble boron in the water, the maximum k_{eff} exceeds the limit of 0.95. Taking credit for boron, the maximum k_{eff} is below the limit of 0.95 as evaluated in Chapter 4 for these accident events. Fresh assemblies are not considered since loading will not be permitted when fresh assemblies are in the pool.

HOLTEC INTERNATIONAL COPYRIGHTED MATERIAL

Table 1.1.4 Accident/Initiating Events and the Resultant Effects			
No.	Accident/Initiating Events	Effect	Discussion
10.	Fire	Reduction in heat transfer and increase in STC and HI-TRAC cavity pressure	Administrative controls will be implemented prior to each inter-unit transfer campaign to ensure there are no permanent or transient sources of fire in the vicinity of the transport path that create a condition outside the design basis fire analysis and of the HI-TRAC/STC assemblage. An evaluation of the hazards along the haul path has been performed [U.F]. The design basis fire event is conservatively postulated and includes 50 gallons of diesel fuel which would be the maximum capacity of the VCT fuel tank. The results show the fuel cladding temperature is within the SFST-ISG-11 limits; the maximum temperature of all materials are within design limits; The maximum STC and HI-TRAC pressures are within design limits (See Chapter 5).
11.	Lightning	Ignition of the VCT fuel tank causing a design basis fire resulting in a reduction in heat transfer and increase in STC and HI-TRAC cavity pressure	The design basis fire event is conservatively postulated and includes 50 gallons of diesel fuel which would be the maximum capacity of the VCT fuel tank. The results show the fuel cladding temperature is within the SFST-ISG-11 limits; the maximum temperature of all materials are within design limits; The maximum STC and HI-TRAC pressures are within design limits. See Chapter 5.

Table 1.1.4 Accident/Initiating Events and the Resultant Effects			
No.	Accident/Initiating Events	Effect	Discussion
12.	Tornado Missile	Loss of water in water jacket resulting in a reduction in shielding and heat transfer. Increase STC and HI-TRAC cavity pressure Loss of water in the HI-TRAC annulus space.	The dose increase as a result of the loss of the water jacket shielding is negligible as discussed in Chapter 7. STC and HI-TRAC cavity pressure remains below the design pressure limits as discussed in Chapter 5. The bottom flange, pool lid and drain plug of the HI-TRAC is protected by the Bottom Missile Shield. A tornado missile which strikes the top lid bolting may result in a loss of seal integrity; however the HI-TRAC remains in a vertical orientation and no loss of water will occur. Loss of pressure in the HI-TRAC annulus space with design basis heat load in the STC will have a negligible effect on the temperatures in the system. The test port in the top lid of the HI-TRAC will be recessed and covered with a protective plate such that it will be impervious to the tornado missile.
13.	Improper Air Space in HI-TRAC	Over-pressurization of the HI-TRAC cavity.	The HI-TRAC is an ASME Code compliant pressure vessel. Two independent verifications shall be made prior to installing the HI-TRAC top lid to ensure the correct water height is established. The pressure sensitivity to the height of the air space is presented in Chapter 5.

HOLTEC INTERNATIONAL COPYRIGHTED MATERIAL

Table 1.1.4 Accident/Initiating Events and the Resultant Effects			
No.	Accident/Initiating Events	Effect	Discussion
14.	Improper Vapor Space in STC	Over-pressurization of the STC cavity.	The STC is an ASME Code compliant pressure vessel. Redundant measures are taken to ensure the vapor space is correctly established. The water will be removed from the STC using a steam blow down process with a fixed length drain tube installed in the STC lid. The steam flows through the vent connection and forces water out through the drain tube. Upon reaching the bottom of the drain tube, the steam bypasses the water and flows out of the drain tube. In this manner the water level inside the canister stays at the bottom of the drain tube as it is physically impossible to drive water out of the drain line below the drain tube. Furthermore the transition from water to steam flowing out of the discharge line assures the operator that water in the STC is at the appropriate level. Water will be collected or measured as it is removed from the STC and verified. The pressure rise test performed on the STC to indicate a thermal misload will also indicate if no water was removed from the STC. If the pressure exceeds the limit for normal operation, the STC will be vented and the vapor space will be verified. The pressure sensitivity to the height of the vapor space is presented in Chapter 5.

Table 1.1.5: Applicable sections of HI-STORM 100 FSAR		
Licensing Report Location of FSAR reference	Subject of the reference	Location in HI-STORM 100 FSAR (Revision 7 except where noted)
Subsection 1.3.2	Description of HI-TRAC 100D	Subsection 1.2.1.2.3
Subsection 2.2.6	Shielding capacity of the HI-TRAC 100D	Section 5.3
Subsection 3.1.3	Temperature limits of HI-TRAC materials	Table 2.2.3
Subsection 3.1.4	Description of HI-TRAC 100D	Subsection 1.2.1.2.3
Subsection 3.1.4	Weight of loaded multi-purpose canister (MPC)	Table 3.2.1
Table 3.2.3	Postulated fire event	Subsection 4.6.2.1
Subsection 3.3	Service Life of HI-TRAC	Subsection 3.4.11
Subsection 6.1.1.2	Description of HI-TRAC 100D	Subsection 1.2.1.2.3
Subsection 6.1.2.2	HI-TRAC material structural properties	Section 3.3
Subsection 6.2.3	HI-TRAC 100D trunnions	Subsection 3.4.3.4

HOLTEC INTERNATIONAL COPYRIGHTED MATERIAL

Table 1.1.5: Applicable sections of HI-STORM 100 FSAR		
Licensing Report Location of FSAR reference	Subject of the reference	Location in HI-STORM 100 FSAR (Revision 7 except where noted)
Subsection 6.2.3.4	Licensing Drawings	Section 1.5, drawings 2145 and 4128
Subsection 6.2.5	HI-TRAC g-load limit of 45 g's during handling	Subsection 2.2.3.1
Subsection 6.2.5	HI-TRAC g-load limit of 45 g's during handling	Subsection 2.2.3.1
Subsection 6.2.6	Stability of free-standing HI-STORM	Subsection 3.4.7.1
Subsection 6.2.6	Center of gravity of loaded HI-TRAC	Table 3.2.3
Section 7.0	Use of SCALE	Section 5.1
Section 7.0	Determination of Design Basis Fuel	Section 5.2
Subsection 7.2.2	Use of SCALE and source term determination	Section 5.2
Subsection 7.2.2	Cobalt-59 impurity levels and cobalt 60 scaling factors	Subsection 5.2.1 and Table 5.2.10
Subsection 7.3.1	Axial distribution of source term based on Axial burnup distribution	Figure 2.1.3 and Table 2.1.11

HOLTEC INTERNATIONAL COPYRIGHTED MATERIAL

Table 1.1.5: Applicable sections of HI-STORM 100 FSAR		
Licensing Report Location of FSAR reference	Subject of the reference	Location in HI-STORM 100 FSAR (Revision 7 except where noted)
Subsection 7.3.2	Composition and densities of shielding materials	Table 5.3.2
Subsection 7.4.1	Axial distribution of source term based on Axial burnup distribution	Figure 2.1.3 and Table 2.1.11
Subsection 7.4.5	Dose Contribution to Site Boundary	Subsection 5.1.2
Subsection 7.4.6	Effluent dose methodology	FSAR Revision 1, Chapter 7
Section 8.2	Structural properties of SA 516 Gr 70, SA 515 Gr 70, SA 350 LF2 and SA 36	Tables 3.3.2, 3.3.3 and 3.3.6
Section 8.2	Properties and description of Alloy X	Appendix 1.A and Table 3.3.1
Section 8.3	Brittle fracture of HI-TRAC materials	Section 3.1.2
Section 8.4	Inspection and Acceptance tests of the HI-TRAC	Table 9.1.3
Subsection 10.1.2	Maintenance of HI-TRAC 100D	Table 9.2.1

HOLTEC INTERNATIONAL COPYRIGHTED MATERIAL

1.2 Summary of Proposed Action

Entergy / Indian Point Energy Center will transfer fuel assemblies from the IP-3 spent fuel pool (SFP) to the IP-2 SFP. The amount of spent nuclear fuel (SNF) in the SFP at IP-3 has reached levels prohibiting a full core off-load.

The crane limitation at IP-3 does not allow the use of a dry storage system currently approved under 10CFR 72 since the IP-3 crane is currently rated at 40 tons and the minimum requirement for dry storage is 100 tons (for the HI-STORM 100 System).

Due to structural limitations of the Fuel Storage Building (FSB) the crane cannot be upgraded to support this weight without a massive building structural modification which would include significant demolition immediately adjacent to the spent fuel pool structure.

The system described in the next section has been developed which uses equipment from Entergy's dry storage program approved for use under 10CFR 72, along with a newly designed equipment, a Shielded Transfer Canister (STC) and ancillaries, to perform a wet transfer of the fuel assemblies between the spent fuel pools.

The transferred IP-3 SNF will then be loaded into the IP-2 SFP and at a later date placed into dry storage. Since the IP-2 crane is a single failure proof crane rated at 100 tons it will not require further upgrades to perform this fuel transfer. The IP-3 crane will be upgraded to be single failure proof however the current crane capacity of 40 tons will not be increased. The new equipment is designed to allow for transferring a maximum number of assemblies while still maintaining the weight below the current IP-3 crane capacity.

HOLTEC INTERNATIONAL COPYRIGHTED MATERIAL

1.3 Description of Required Equipment and their Safety Function

1.3.1 Shielded Transfer Canister

The Shielded Transfer Canister (STC) is a thick-walled cylindrical vessel with a welded base plate, and a bolted top lid. The internal cavity space of the STC is equipped with fuel basket to create twelve storage cells for transferring spent nuclear fuel (SNF) assemblies. The thicknesses of the STC shell, base plate, and top lid are substantially in excess of that required to meet their pressure retention function. The fabrication, testing, and inspection of the STC are governed by the 2004 Edition of Section III of the ASME Code, which is the latest Code edition referenced in 10CFR50.55a, "Codes and standards". The material procurement, design, fabrication, and inspection of the STC basket are per ASME Section III, Subsection NG (2004 Edition). As shown in Chapter 6, the pressure boundary of the STC meets the stress limits of ASME Boiler & Pressure Vessel Code Section III Class 3, Subsection ND with large margins and will not be a code stamped vessel. The applicable design pressure and temperature for the STC are listed in Table 3.2.1. According to the ASME B&PV Code Section ND-7000, pressure vessels are required to have overpressure protection; however no overpressure protection is provided in the STC. The function of the STC is to retain the radioactive contents under normal, off-normal, and accident conditions. The STC is designed to withstand a maximum internal pressure considering maximum accident temperatures and therefore does not require the pressure relief valve.

The loaded STC is lifted using two special lifting devices: the STC lift lock and the STC lifting device (2 assemblies required). The STC lift lock is attached to the top center of the STC lid using 4 bolts, and it serves as the attachment point for the overhead cranes at IP3 and IP2 (see Figure 1.4.3). The pair of STC lifting devices are also bolted to the top surface of the STC lid at opposite locations on the lid perimeter. Each STC lifting device assembly has a pneumatically controlled lift arm that hangs below the STC lid and connects to an STC lifting trunnion (see Figure 1.4.6). Thus, during a lift of a loaded STC, the load travels through the STC body to the STC lifting trunnions, from the STC lifting trunnions to the STC lifting devices, from the STC lifting devices to the STC lid, from the STC lid to the STC lift lock, and finally from the STC lift lock to the overhead crane.

The special lifting devices (i.e., STC lift lock and STC lifting device) are designed to meet the increased safety factors of ANSI N14.6 [B.S]. Meanwhile, the interfacing lift points on the STC (i.e., threaded bolt holes and STC lifting trunnions) are designed to meet the stress limits of NUREG-0612 [C.A]. The STC has two lift points which will attach to the overhead cranes at IP-3 and IP-2 through the STC lid and a lifting device. The STC lifting points are designed in accordance with NUREG-0612 [C.A] for critical loads. The lid attaches using threaded studs and nuts.

The design of the STC is presented in the Licensing Drawings in Section 1.5. A cut-away view is shown in Figure 1.3.1. Other essential design characteristics of the STC are:

HOLTEC INTERNATIONAL COPYRIGHTED MATERIAL

i. The basket is an open-ended honeycomb configuration of austenitic stainless steel plates with panels of Metamic® neutron absorber for criticality control affixed to the plates under thin stainless steel sheathing. The edges of the plates are welded to each other.

ii. The honeycomb basket stands upright in the STC cavity. The basket supports are welded to the basket which will ensure consistent spacing between the basket and the inner wall of the STC is maintained. The area is not large enough to permit an inadvertent loading of a fuel assembly into the peripheral space.

iii. The special lifting device (i.e., STC lift lock and STC lifting device) used to lift the STC meets the guidance of NUREG-0612, Section 5.1.6(1) and ANSI N14.6-1993 [B.S] for critical loads. The interfacing lift points are designed to meet the requirements of NUREG-0612, Section 5.1.6(3).

iv. The lifting attachments are engineered for remote engagement and disengagement to minimize time and dose.

v. The arrangement of stainless steel and Metamic plates in the STC fuel basket is based on Holtec's multi-purpose canister, MPC-32, certified in Docket No. 72-1014, and used in numerous PWR dry storage applications in the U.S. (including IP-2).

The governing quality assurance requirements for design and fabrication of the STC are stated in 10CFR 50 Appendix B. Holtec's Nuclear Quality Assurance program (USNRC Docket No. 71-0784) complies with this regulation and is designed to provide a flexible but highly controlled system for the design, analysis, licensing and fabrication of customized components in accordance with the applicable codes, specifications, and regulatory requirements.

1.3.2 HI-TRAC 100D Transfer Cask

The STC will be placed in the HI-TRAC 100D Transfer Cask (HI-TRAC) which is an existing piece of equipment already used at IP-2 to transfer SNF from the SFP into dry storage. The HI-TRAC has a steel, lead, steel layered cylindrical shell for gamma radiation shielding with an outer annulus which can be filled with water for neutron shielding. The structural integrity is provided by the carbon steel. The lifting trunnions on the HI-TRAC are designed to meet the design safety factors of ANSI N14.6 for critical loads. The HI-TRAC is part of the HI-STORM 100 Dry Cask Storage System under NRC Docket 72-1014 and is described fully in its Final Safety Analysis Report [K.A]. The HI-TRAC has been designed, fabricated, inspected, and material procured per ASME Section III, Subsection NF (2005 Edition with 1996 and 1997 Addenda) with the trunnions being designed to ANSI N14.6. For the purposes of the spent fuel transfer project the HI-TRAC has also been re-evaluated against the stress limits imposed by ASME Section III, Subsection ND (2007 Edition) including the modified HI-TRAC top lid specific to this project.

A solid top lid, designed specially for the HI-TRAC 100D for the purpose of the inter-unit fuel transfer operation, has an elastomeric seal to retain the water present in the STC/HI-TRAC annulus space. The lid will be attached with multiple bolts to provide the necessary bolt pull to

HOLTEC INTERNATIONAL COPYRIGHTED MATERIAL

maintain joint integrity. The HI-TRAC is designed to meet the stress limits of the ASME Code, Section III, Subsection ND, Class 3. According to the ASME B&PV Code Section ND-7000, pressure vessels are required to have overpressure protection; however no overpressure protection is provided in the HI-TRAC. The function of the HI-TRAC is to retain its contents under normal, off-normal, and accident conditions. The HI-TRAC is designed to withstand a maximum internal pressure considering maximum accident temperatures and therefore does not require the pressure relief valve. The HI-TRAC is designed to:

i. Provide maximum shielding to the plant personnel engaged in conducting "short-term operations" pertaining to inter-unit transfer.

ii. Provide protection to the STC and the SNF against extreme environmental phenomena loads, such as tornado missiles, during short-term operations.

iii. Serve as the container equipped with the appropriate lifting devices in full design compliance with NUREG-0612, Section 5.1.6.(3) and ANSI N14.6 to lift, move, and handle the STC, as required, to perform the short-term operations.

The above performance demands on the HI-TRAC are met by its design configuration as summarized below and presented in the licensing drawings in Section 1.5 of the HI-STORM 100 FSAR, Holtec Report HI-2002444 and in Section 1.5 of this report for the lid design.

The HI-TRAC, as described in NRC Docket No. 72-1014, is principally made of carbon steel and lead. The cask consists of two major parts, namely (a) a multi-shell cylindrical cask body, and (b) a multi-plate bottom lid. The cylindrical cask body is made of three concentric shells joined to a solid annular forging at their two extremities by circumferentially continuous welds.

The innermost and the middle shell are fixed in place by longitudinal connector ribs which serve as radial connectors between the two shells. The radial connectors provide a continuous path for radial heat transfer and render the dual shell configuration into a stiff beam under flexural loadings. The space between the two shells is occupied by lead, which provides the bulk of the cask's radiation shielding capability and accounts for a major portion of its weight.

Between the middle shell and the outermost shell is the outer annulus space that is referred to as the water jacket. This space is filled with uncontaminated water and provides most of the neutron shielding capability to the cask. Ethylene glycol can be added to the water jacket if ambient temperatures during the transfer are expected to be below freezing. The inter-unit fuel transfers will be limited to times when the ambient temperature is above 0 °F.

The water in the HI-TRAC annulus renders both a heat transfer and shielding function. Because of its heat transfer safety function, ensuring that the annulus water is not lost is a central objective in the system design. Loss of HI-TRAC annulus water accident scenarios have been evaluated in Tables 1.1.3 and 1.1.4 in this report.

The bottom of the HI-TRAC has a thick lid that makes the cask a watertight container using an elastomeric seal against the machined face of the forging. A set of bolts that tap into the

HOLTEC INTERNATIONAL COPYRIGHTED MATERIAL

machined holes in the bottom lid provide the required physical strength to meet the structural requirements of ANSI 14.6 and to provide the necessary bolt pull to maintain joint integrity.

The Bottom Missile Shield (BMS) has been designed (See Section 1.5) to protect the flanged joint from impulsive or impactive loads due to an incident tornado missile. The tornado missile strike directed to the HI-TRAC bottom flange joint is considered in Case #12 in Table 1.1.4. The BMS will be attached to the HI-TRAC for all fuel transfer evolutions.

For the bolted lid connections of the HI-TRAC top lid; after an accident involving a tornado missile the top lid will continue to remain in place. In the event some damage is done to the bolts the water will remain in the HI-TRAC. Additionally, it has been shown that the HI-TRAC always remains vertical, even after a tornado missile impact.

A cut-away view of the HI-TRAC 100D is shown in Figure 1.3.2.

1.3.3 Vertical Cask Transporter

The HI-TRAC will be lifted and moved using the IP-2 Vertical Cask Transporter (VCT). This is an existing piece of equipment which has been used at the site during the dry cask storage campaign licensed under 10 CFR 72. An existing low profile transporter (LPT) which has also been used during the above mentioned IP-2 dry storage campaign will be used to move the HI-TRAC into the IP-2 building. Air pads will be used at the IP-3 building to move the HI-TRAC out of the building before being placed on the VCT.

The Vertical Cask Transporter is a high-capacity, tracked vehicle designed specifically for the lifting and handling of spent fuel storage components. The VCT lifts the HI-TRAC via special lifting devices designed, constructed and tested in accordance with ANSI N14.6. The HI-TRAC is lifted using hydraulic lifting towers which have features to prevent a load drop even under complete hydraulic line failure. In addition, special locking pins secure the load during movement providing redundant drop protection. A hydraulically-tightened safety strap secures the cask in the VCT and prevents rocking or swaying of the cask under movement. Finally, the VCT is equipped with speed governing features, which limits the travel speed to approximately 0.5 mph and prevents coasting on a loss of power condition, and a braking system with emergency stop which overrides all other controls and brings the Vertical Cask Transporter to a stop.

HOLTEC INTERNATIONAL COPYRIGHTED MATERIAL

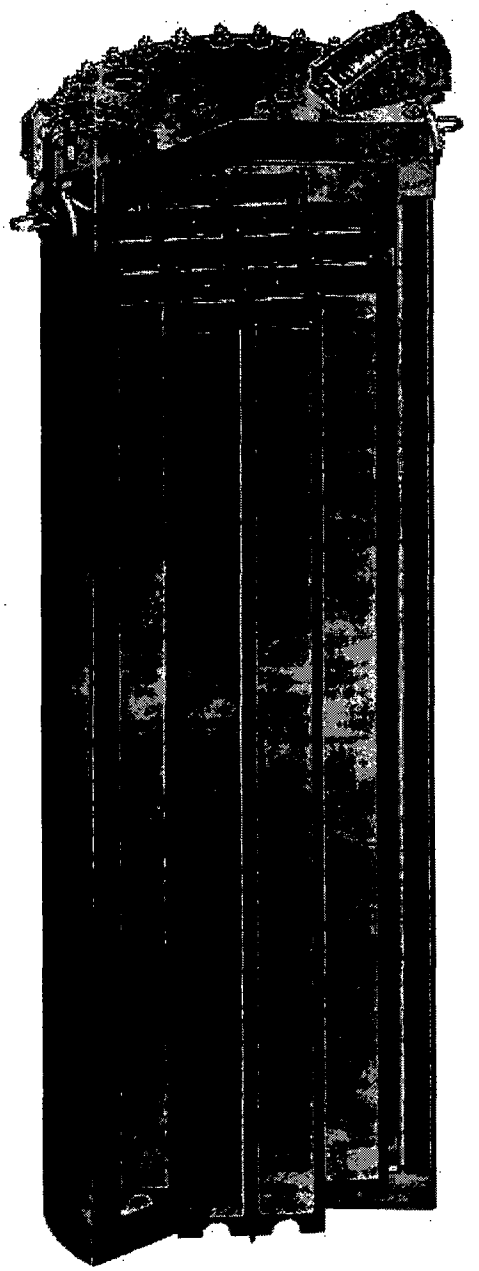

Figure 1.3.1: Cut-Away View of the Shielded Transfer Canister

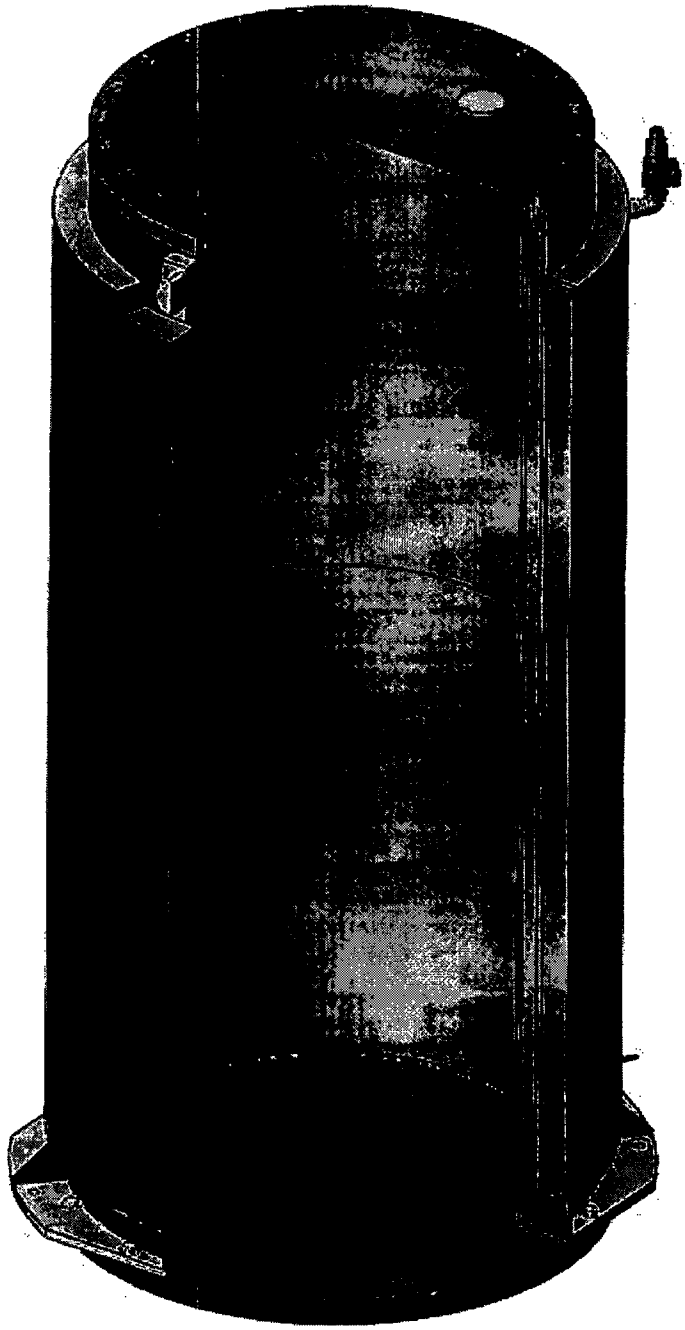

Figure 1.3.2: Cut-Away View of the HI-TRAC 100D Transfer Cask

1.4 Inter-Unit Transfer Operations

The below operational steps are pictorially illustrated in Figures 1.4.1 through 1.4.17.

The STC is a thick-walled vessel with a removable top lid capable of transferring up to twelve IP-3 spent fuel assemblies. The STC is used in conjunction with the HI-TRAC transfer cask currently licensed under 10CFR Part 72 in Docket No. 72-1014 and used at IP-2. During STC closure and transfer, the STC shielding is supplemented with the HI-TRAC shielding (steel, lead and water) and the water contained in the annulus space located between the STC and the HI-TRAC. Since the outer diameter of the STC is smaller than the MPC used at IPEC, the HI-TRAC/STC centering assembly (See Drawing in Section 1.5) is placed between the STC and the HI-TRAC. The centering assembly keeps the STC centered inside HI-TRAC cavity and provides a soft edge lead-in during cask loading operations to help prevent damage to the inside coatings of HI-TRAC. The STC includes a removable bolted lid with vent and drain ports for water filling and draining purposes. The lid also features threaded lid lifting points. The STC top end features cask lifting points which will provide a means to attach it to the overhead cranes. The centering assembly forms an annular region inside HI-TRAC which remains mostly full of water during loading and transfer operations. An air space is purposely left in the HI-TRAC above the height of the STC lid for two purposes; to allow the STC lid operations to occur unhindered by water, and to provide an expansion zone for the water inside the HI-TRAC cavity.

The STC is moved between IP-2 and IP-3 vertically in the HI-TRAC. Neither the HI-TRAC nor STC will be handled in the horizontal orientation when loaded. In addition to the water in the STC cavity and the water in the annulus space between the STC and HI-TRAC's inner shell, the HI-TRAC's water jacket is also filled with water. These three discrete zones of water provide shielding and aid in heat transfer.

At the start of operations, the HI-TRAC top lid is removed and the empty STC is placed inside the HI-TRAC. The centering assembly centers the STC inside of the HI-TRAC. The HI-TRAC's top lid is installed on the HI-TRAC to prevent any spilling of the water during the outside transfer process. Movement of HI-TRAC (containing the STC) is performed using the Vertical Cask Transporter (VCT), the IP-2 Low Profile Transporter (LPT) or air-pads as described below in the synopsis of the fuel transfer operations.

The VCT moves the HI-TRAC containing the empty STC outside the IP-3 FSB truck bay door. The HI-TRAC is lowered onto air-pads and the VCT releases the HI-TRAC. The IP-3 door is opened and HI-TRAC is positioned inside the IP-3 FSB truck bay beneath the overhead crane using the IP-3 air-pads. The IP-3 FSB truck bay door is closed. The annulus between the STC and HI-TRAC is filled with demineralized water to an elevation of 1" from the top of the STC lid. It also assures that when the loaded STC is placed back in to the HI-TRAC the water does not overflow. The water in the annulus help minimize contaminated particulates from the outside of the STC, if any, from adhering to the inside of HI-TRAC. Also in order to minimize the potential of contaminating the interior of the HI-TRAC, a removable coating will be applied

HOLTEC INTERNATIONAL COPYRIGHTED MATERIAL

prior to use for wet transfer operations and at the end of the fuel transfer campaign the HI-TRAC cavity will be decontaminated. The STC lid nuts and washers are removed and if not already, the STC is filled with pool water.

The overhead crane is positioned over the STC and the STC lift rig is attached to the overhead crane. The lift rig connects the overhead crane to the STC lid and the STC is removed from the HI-TRAC and positioned over the cask loading area of the spent fuel pool. A set of remotely actuated connectors attach the STC lid to the STC body. The remotely actuated connectors can be operated manually if the actuator fails. The STC is lowered into the cask loading area and the lid is removed. The lid is removed from the spent fuel pool and the lid seal is inspected and replaced as necessary.

For each fuel transfer cycle, up to twelve spent fuel assemblies may be loaded into the STC. The STC lid is positioned over the STC and installed. The lid is installed and the remotely actuated connectors attach it to the STC body. After the lifting device arms are properly engaged to the lifting trunnions, the STC is then raised to the surface of the spent fuel pool and any standing water on the lid is removed. A small amount of water is removed from the STC to avoid spilling during handling. In accordance with direction from the site's Radiation Protection Group, the STC is raised and removed from the spent fuel pool, sprayed with demineralized water and placed directly into the HI-TRAC. The STC lid nuts and washers are installed and are tightened. The lifting device is disconnected from the STC top lid. The water is removed by blowing steam into the STC cavity to create a compressible water vapor space rather than a highly incompressible air space above the water. The amount of steam to be injected will have little effect on the soluble boron levels in the STC since the liquid equivalent will be approximately 1 gallon of water. The STC seals are tested to the criterion given in ANSI N14.5 Section 7.6 to assure that the STC is properly assembled for transfer operations. The pressure inside the STC will be monitored after the fuel has been loaded and prior to transferring the STC between units to demonstrate that the pressure inside will remain below the normal operating pressure limits. This pressure rise test can also detect if the water was not replaced with steam since the sealed system will quickly pressurize if there isn't a vapor space. The HI-TRAC's top lid is installed and the bolts are tightened and the seal is tested in accordance with ANSI N14.5 [B.T] to the acceptance criteria in Chapter 7. The IP-3 door is opened and the HI-TRAC is moved to the VCT on air-pads.

The VCT will travel an approved route between IP-3 and IP-2. The load path will be evaluated (i.e. roadway and underground facilities) prior to the transfer of the spent fuel and upgraded as necessary to support the VCT with the loaded STC in the HI-TRAC. The evaluation, performed under 50.59, will consider a spent fuel transfer path starting at the IP-3 cask loading area and traveling to the IP-2 cask loading area. If any portion of the path has been analyzed previously as part of the IP-2 dry storage campaign, that analysis will be considered bounding since the VCT carrying a loaded MPC inside the HI-STORM weighs more than the VCT carrying a loaded STC inside the HI-TRAC. The haul path is hardened with the installation of concrete roadways and turning pads for the VCT to travel on and to eliminate significant degradation to the haul path surface. Prior to each transfer, the roadway will also be visually inspected and repaired as necessary.

HOLTEC INTERNATIONAL COPYRIGHTED MATERIAL

Prior to the fuel transfer the boundary of the protected area will be changed so that the VCT will always remain within the protected area. The site security plan will also be modified as required.

The HI-TRAC containing the loaded STC is lowered from the VCT onto the IP-2 LPT and moved into the IP-2 FSB. Inside the IP-2 FSB, the HI-TRAC is positioned beneath the cask handling crane. A drain line containing a pressure gauge is connected to HI-TRAC's top lid vent port and opened relieveing any internal pressure. The HI-TRAC top lid bolts are removed and the HI-TRAC top lid is removed. The drain line is then attached to the vent port connection located on the lid of the STC and opened relieving any internal STC pressure. STC nuts and washers are removed.

The STC lifting device and the Lift Cleat is attached to the STC lid. The cask handling crane is attached to the STC through the Lift Cleat Adapter. The STC lifting device arms are engaged with the STC trunnions. In accordance with direction from the site's Radiation Protection Group the STC is raised and positioned directly into the spent fuel pool cask loading area and lowered into the pool.

Procedures are already in place to confirm acceptable boron levels in the IP-2 SFP every seven days per IP-2 TS 3.7.13 and at more frequent intervals when moving fuel assemblies. A bounding analysis was done in accordance with NET-173-02 [T.K] assuming the entire STC cavity is completely filled with unborated water. The analysis does not consider the amount of water which will be displaced by the fuel assemblies or the amount of water which will be removed from the top of the cavity prior to transfer. The soluble boron level in the IP-2 SFP is reduced by less than 1% and is considerably higher than the required 786 ppm ensuring sub-criticality under non-accident conditions [T.L].

The STC is lowered completely into the cask loading area. The remotely-actuated connectors release from the STC body and the STC lid is removed. The STC lid is removed from the spent fuel pool and the spent fuel assemblies are removed from the STC. The STC lid seal is inspected and replaced as necessary. The STC lid is positioned over the STC and installed. The lid's remotely-actuated connectors attach to the STC body and the STC is raised to the surface of the spent fuel pool. Any standing water on the lid is removed. In accordance with direction from the site's Radiation Protection Group the STC is raised and removed from the spent fuel pool, decontaminated and the water inside the STC shall be drained before being placed into the HI-TRAC. The STC lid bolts are installed and the lid bolts are tightened. The Lift Cleat is disconnected from the STC top lid. The HI-TRAC top lid is installed and the bolts are tightened and the HI-TRAC containing the empty STC is then ready to be returned to IP-3.

HOLTEC INTERNATIONAL COPYRIGHTED MATERIAL

FIGURE 1.4.1:

A HI-TRAC CONTAINING AN EMPTY SHIELDED TRANSFER CANISTER IS POSITIONED IN THE IP-3 CASK RECEIVING BAY

(FIGURE WITHHELD IN ACCORDANCE WITH 10 CFR 2.390)

HOLTEC INTERNATIONAL COPYRIGHTED MATERIAL

FIGURE 1.4.2:

THE HI-TRAC TOP LID IS REMOVED AND THE SHIELDED TRANSFER CANISTER LID BOLTS ARE PREPARED

(FIGURE WITHHELD IN ACCORDANCE WITH 10 CFR 2.390)

FIGURE 1.4.3:

THE OVERHEAD CRANE IS ATTACHED TO THE SHIELDED TRANSFER CANISTER TOP LID

(FIGURE WITHHELD IN ACCORDANCE WITH 10 CFR 2.390)

FIGURE 1.4.4:

THE SHIELDED TRANSFER CANISTER IS REMOVED FROM HI-TRAC

(FIGURE WITHHELD IN ACCORDANCE WITH 10 CFR 2.390)

HOLTEC INTERNATIONAL COPYRIGHTED MATERIAL

FIGURE 1.4.5:

THE SHIELDED TRANSFER CANISTER IS POSITIONED IN THE SPENT FUEL POOL WITH THE LID

(FIGURE WITHHELD IN ACCORDANCE WITH 10 CFR 2.390)

HOLTEC INTERNATIONAL COPYRIGHTED MATERIAL

FIGURE 1.4.6:

THE SHIELDED TRANSFER CANISTER IS LOWERED INTO THE CASK LOADING AREA OF THE SPENT FUEL POOL

(FIGURE WITHHELD IN ACCORDANCE WITH 10 CFR 2.390)

FIGURE 1.4.7:

THE SHIELDED TRANSFER CANISTER LID IS REMOVED

(FIGURE WITHHELD IN ACCORDANCE WITH 10 CFR 2.390)

FIGURE 1.4.8:

SPENT FUEL ASSEMBLIES ARE LOADED INTO THE SHIELDED TRANSFER CANISTER

(FIGURE WITHHELD IN ACCORDANCE WITH 10 CFR 2.390)

HOLTEC INTERNATIONAL COPYRIGHTED MATERIAL

FIGURE 1.4.9:

THE SHIELDED TRANSFER CANISTER IS FULLY LOADED WITH SPENT FUEL

(FIGURE WITHHELD IN ACCORDANCE WITH 10 CFR 2.390)

FIGURE 1.4.10:

THE SHIELDED TRANSFER CANISTER LID IS INSTALLED UNDERWATER

(FIGURE WITHHELD IN ACCORDANCE WITH 10 CFR 2.390)

FIGURE 1.4.11:

THE SHIELDED TRANSFER CANISTER IS RAISED TO THE TOP OF THE SPENT FUEL POOL

(FIGURE WITHHELD IN ACCORDANCE WITH 10 CFR 2.390)

HOLTEC INTERNATIONAL COPYRIGHTED MATERIAL

FIGURE 1.4.12:

A SMALL VOLUME OF WATER IS PUMPED FROM THE SHIELDED TRANSFER CANISTER CAVITY

(FIGURE WITHHELD IN ACCORDANCE WITH 10 CFR 2.390)

HOLTEC INTERNATIONAL COPYRIGHTED MATERIAL

FIGURE 1.4.13:

THE SHIELDED TRANSFER CANISTER IS REMOVED FROM THE SPENT FUEL POOL AND PLACED DIRECTLY IN HI-TRAC

(FIGURE WITHHELD IN ACCORDANCE WITH 10 CFR 2.390)

HOLTEC INTERNATIONAL COPYRIGHTED MATERIAL

FIGURE 1.4.14:

THE SHIELDED TRANSFER CANISTER IS FULLY SEATED IN HI-TRAC AND THE LID BOLTS ARE TIGHTENED

(FIGURE WITHHELD IN ACCORDANCE WITH 10 CFR 2.390)

FIGURE 1.4.15:

THE HI-TRAC TOP LID IS INSTALLED AND THE BOLTS ARE TIGHTENED

(FIGURE WITHHELD IN ACCORDANCE WITH 10 CFR 2.390)

FIGURE 1.4.16:

HI-TRAC IS MOVED FROM THE IP-3 CASK RECEIVING AREA TO THE AWAITING VERTICAL CASK TRANSPORTER

(FIGURE WITHHELD IN ACCORDANCE WITH 10 CFR 2.390)

HOLTEC INTERNATIONAL COPYRIGHTED MATERIAL

FIGURE 1.4.17:

THE VERTICAL CASK TRANSPORTER LIFTS THE HI-TRAC FROM THE AIR-PADS AND MOVES IT TO IP-2

(FIGURE WITHHELD IN ACCORDANCE WITH 10 CFR 2.390)

1.5 Reference Drawings

The following drawings are provided on subsequent pages in this section:

Drawing No.	Title	Revision
6013	INDIAN POINT UNIT 3 SHIELDED TRANSFER CANISTER ASSEMBLY	Rev 11
6015	INDIAN POINT UNIT 3 SHIELDED TRANSFER CANISTER BASKET ASSEMBLY	Rev 6
6571	INDIAN POINT UNIT 3 HI-TRAC TRANSFER CASK TOP LID ASSEMBLY	Rev 4
4128	HI-TRAC 100D TRANSFER CASK	Rev 6
7176	BOTTOM MISSILE SHIELD	Rev 2
7591	HI-TRAC/STC CENTERING ASSEMBLY	Rev 2

The licensing drawing for the HI-TRAC 100D in service at IP-2 is attached (Holtec Drawing No. 4128 Revision 6) for informational purposes only.

HOLTEC INTERNATIONAL COPYRIGHTED MATERIAL

1.5 Supplier's Qualification

The inter-unit transfer program is being managed by Holtec International as the prime contractor to Entergy. Holtec International is an engineering technology company with a principal focus on the power industry. Holtec's Nuclear Power Division (NPD) specializes in spent fuel storage technologies, both wet and dry.

The USNRC dockets in parts 71 and 72 currently maintained by the Company are listed in Table 1.6.1. Holtec's corporate engineering consists of professional engineers and experts with extensive experience in every discipline germane to the fuel storage technologies, namely structural mechanics, heat transfer, computational fluid dynamics, and nuclear physics.

Holtec International's quality assurance program was originally developed to meet NRC requirements delineated in 10CFR50, Appendix B, and was expanded to include provisions of 10CFR71, Subpart H, and 10CFR72, Subpart G, for structures, systems, and components designated as important to safety. The Holtec quality assurance program, which satisfies all 18 criteria in 10CFR72, Subpart G, that apply to the design, fabrication, construction, testing, operation, modification, and decommissioning of structures, systems, and components important to safety is incorporated by reference into this licensing report. Holtec's QA Program has been certified by the USNRC (Certificate No. 71-0784).

The equipment required for the inter-unit transfer project will be fabricated by Holtec Manufacturing Division (HMD) located in Pittsburgh, Pennsylvania. HMD is a long term N-Stamp holder and fabricator of nuclear components. Both Holtec's headquarters and the HMD subsidiary have been subject to triennial inspections by the USNRC. Although unlikely, if another fabricator is to be used for the fabrication of any equipment in this program, then the proposed fabricator will be evaluated and audited in accordance with Holtec International's quality assurance program.

HOLTEC INTERNATIONAL COPYRIGHTED MATERIAL

TABLE 1.6.1 USNRC DOCKETS ASSIGNED TO HOLTEC INTERNATIONAL	
System Name	**Docket Number**
HI-STORM 100 (Storage)	72-1014
HI-STAR 100 (Storage)	72-1008
HI-STAR 100 (Transport)	71-9261
HI-STAR 180 (Transport)	71-9325
HI-STAR 60 (Transport)	71-9336
Holtec Quality Assurance Program	71-0784

CLIENT	- GENERAL
PROJECT NO. 1026	P.O. NO. N/A
DRAWING PACKAGE I.D. 4128	TOTAL SHEETS 10

LICENSING DRAWING PACKAGE COVER SHEET

LICENSING DRAWING PACKAGE CONTENTS:

SHEET	DESCRIPTION
1	COVER SHEET
2	ASSEMBLY DRAWING AND BILL OF MATERIALS
3	OVERALL DIMENSIONS
4	POOL LID ASSEMBLY
5	BASE PLATE ASSEMBLY
6	OUTER SHELL ASSEMBLY
7	TOP FLANGE DETAILS
8	TRUNNION AND INNER SHELL ASSEMBLY
9	WATER JACKET SHELL ASSEMBLY
10	TOP LID ASSEMBLY

REVISION LOG

REV	AFFECTED DRAWING SHEET NUMBERS	SUMMARY OF CHANGES/ AFFECTED ECOs	PREPARED BY	APPROVAL DATE	VIR# †
0	INITIAL ISSUE	1026-30	S.CAIN	8/25/03	82748
1	ALL SHEETS	1026-31	T.F.O.	10/27/03	70107
2	SHEET 4	1026-32	LEH	12/17/03	86122
3	SHEET 5 & 8	1026-33	T.F.O.	3/23/04	30678
4	SHEET 6	1026-40	JJB	12/30/05	62382
5	SHEET 4	1026-41	SLC	2/15/06	61656
6	SHEET 6	1026-42	SLC	8/12/08	57791

† THE VALIDATION IDENTIFICATION RECORD (VIR) NUMBER IS A COMPUTER GENERATED RANDOM NUMBER WHICH CONFIRMS THAT ALL APPROPRIATE REVIEWS OF THIS DRAWING ARE DOCUMENTED IN COMPANY'S NETWORK.

NOTES:

1. THE EQUIPMENT DOCUMENTED IN THIS DRAWING PACKAGE HAS BEEN CONFIRMED BY HOLTEC INTERNATIONAL TO COMPLY WITH THE SAFETY ANALYSES DESCRIBED IN THE HI-STORM FSAR.
2. DIMENSIONAL TOLERANCES ON THIS DRAWING ARE PROVIDED SOLELY FOR LICENSING PURPOSES TO DEFINE REASONABLE LIMITS ON THE NOMINAL DIMENSIONS USED IN LICENSING WORK. HARDWARE IS FABRICATED IN ACCORDANCE WITH THE DESIGN DRAWINGS, WHICH HAVE MORE RESTRICTIVE TOLERANCES, TO ENSURE COMPONENT FIT-UP. DO NOT USE WORST-CASE TOLERANCE STACK-UP FROM THIS DRAWING TO DETERMINE COMPONENT FIT-UP.
3. THE REVISION LEVEL OF EACH INDIVIDUAL SHEET IN THE PACKAGE IS THE SAME AS THE REVISION LEVEL OF THIS COVER SHEET. A REVISION TO ANY SHEET(S) IN THIS PACKAGE REQUIRES UPDATING OF REVISION NUMBERS OF ALL SHEETS TO THE NEXT REVISION NUMBER.
4. APPLICABLE CODES AND STANDARDS ARE DELINEATED IN FSAR SECTION 2.2.4.
5. ALL WELDS REQUIRE VISUAL EXAMINATION. ADDITIONAL NDE INSPECTIONS ARE NOTED ON THE DRAWING. NDE TECHNIQUES AND ACCEPTANCE CRITERIA ARE PROVIDED IN FSAR TABLE 9.1.4.
6. UNLESS OTHEWISE NOTED, FULL PENETRATION WELDS MAY BE MADE FROM EITHER SIDE OF A COMPONENT.
7. THIS COMPONENT IS IMPORTANT-TO-SAFETY, CATEGORY A, BASED ON THE HIGHEST CLASSIFICATION OF ANY SUBCOMPONENT. SUBCOMPONENT CLASSIFICATIONS ARE PROVIDED ON THE DESIGN DRAWING.
8. ALL WELD SIZES ARE MINIMUMS EXCEPT AS ALLOWED BY APPLICABLE CODES AS CLARIFIED IN THE FSAR. FABRICATOR MAY ADD WELDS WITH HOLTEC APPROVAL.

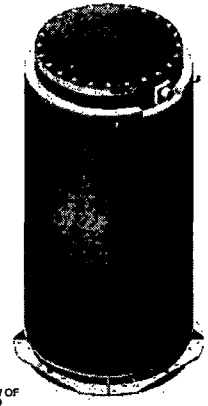

ISOMETRIC VIEW OF HI-TRAC 100D TRANSFER CASK

"NOTICE: CERTAIN DESIGN AND OPERATIONAL FEATURES OF THIS EQUIPMENT ARE PROTECTED UNDER U.S. PATENT NO. 6,587,536. AN INFRINGEMENT BY ANY ENTITY IS UNLAWFUL."

HOLTEC INTERNATIONAL
HOLTEC CENTER
555 LINCOLN DRIVE WEST
MARLTON, NJ 08053

CLIENT	- GENERAL
DESCRIPTION	100 TON HI-TRAC 100D ASSEMBLY
PROJECT NO.	1026
P.O. NO.	N/A
DRAWING NO.	4128
SHEET	1
TOTAL SHEETS	10

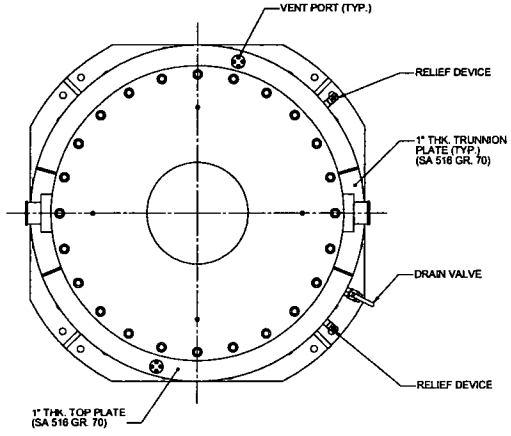

PLAN VIEW

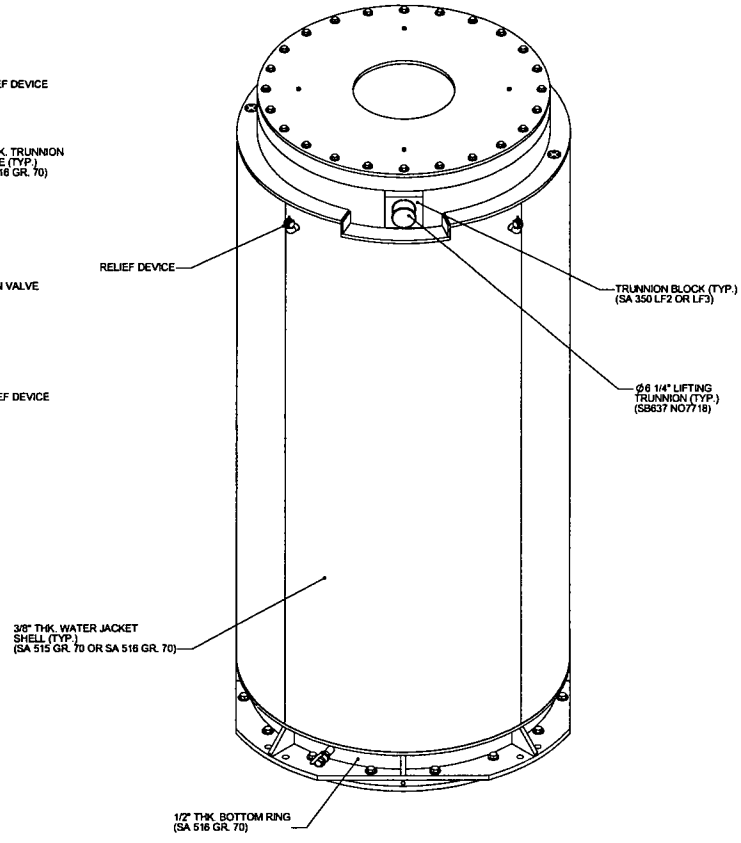

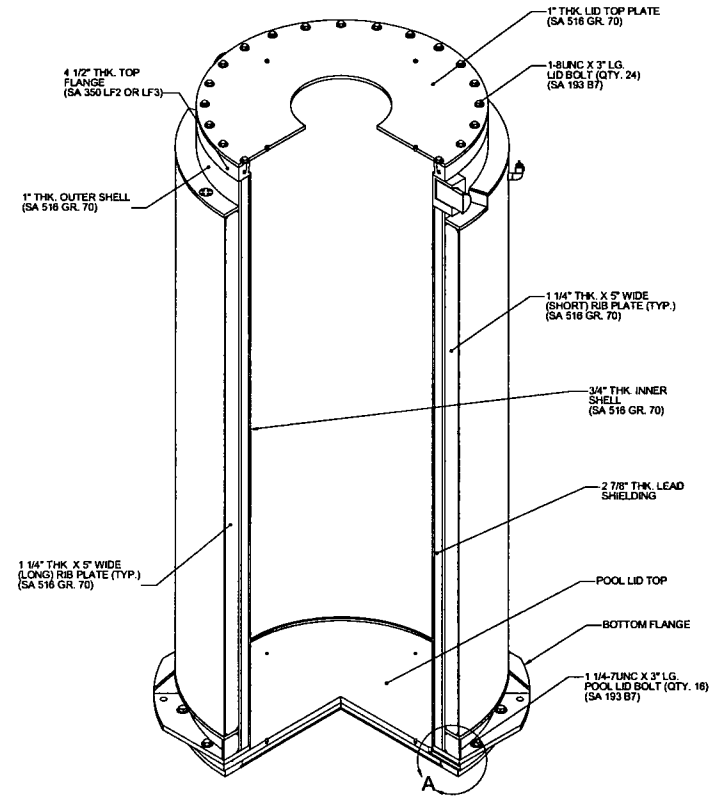

SECTION ISOMETRIC VIEW

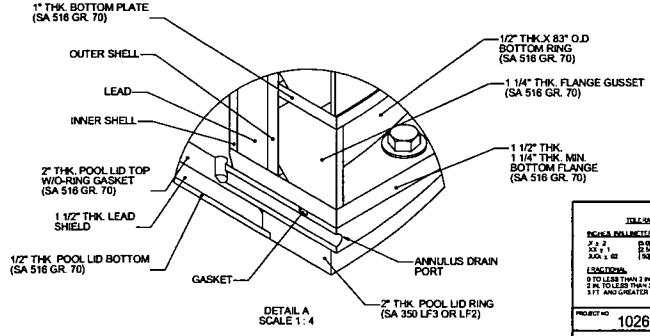

DETAIL A
SCALE 1 : 4

"NOTICE: CERTAIN DESIGN AND OPERATIONAL FEATURES OF THIS EQUIPMENT ARE PROTECTED UNDER U.S. PATENT NO. 6,587,536. AN INFRINGEMENT BY ANY ENTITY IS UNLAWFUL."

TOLERANCES

INCHES (MILLIMETERS)		ANGULAR
X ± 2	(±5)	±2°
XX ± 1	(±2.54)	
XXX ± 62	(±50)	

FRACTIONAL

0 TO LESS THAN 2 IN	±1/8 IN
2 IN. TO LESS THAN 3 FT	±1/4 IN
3 FT AND GREATER	±3/8 IN

HOLTEC INTERNATIONAL
HOLTEC CENTER
555 LINCOLN DRIVE WEST
MARLTON, NJ 08053

CLIENT: GENERAL

DESCRIPTION: 100 TON HI-TRAC 100D ASSEMBLY

PROJECT NO	SIZE	DRAWING NO.	SHEET	REV
1026	D	4128	2	6
N/A	SCALE: NONE			

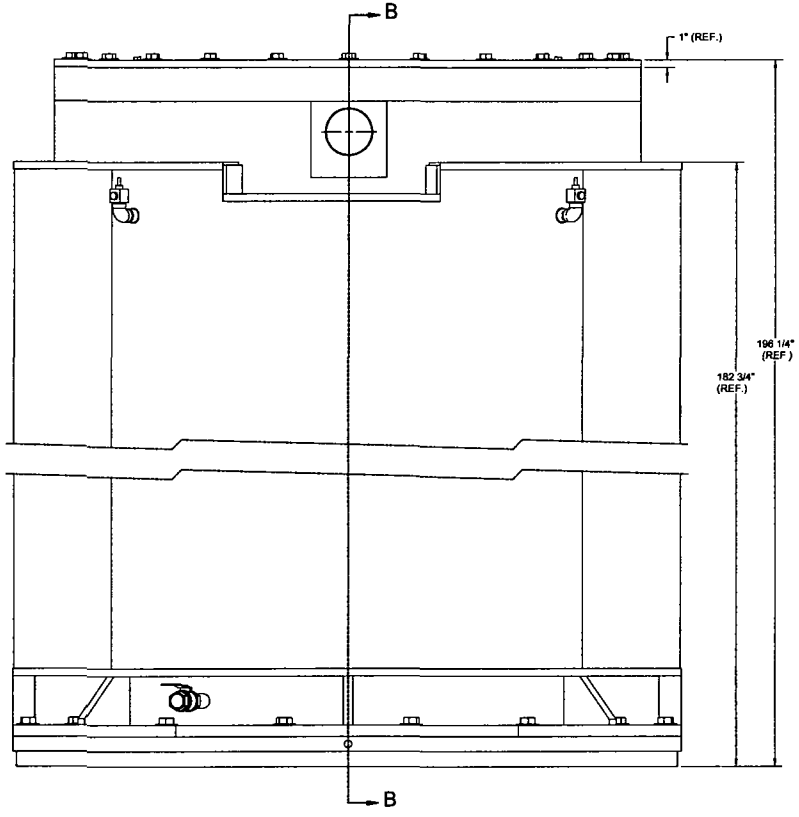

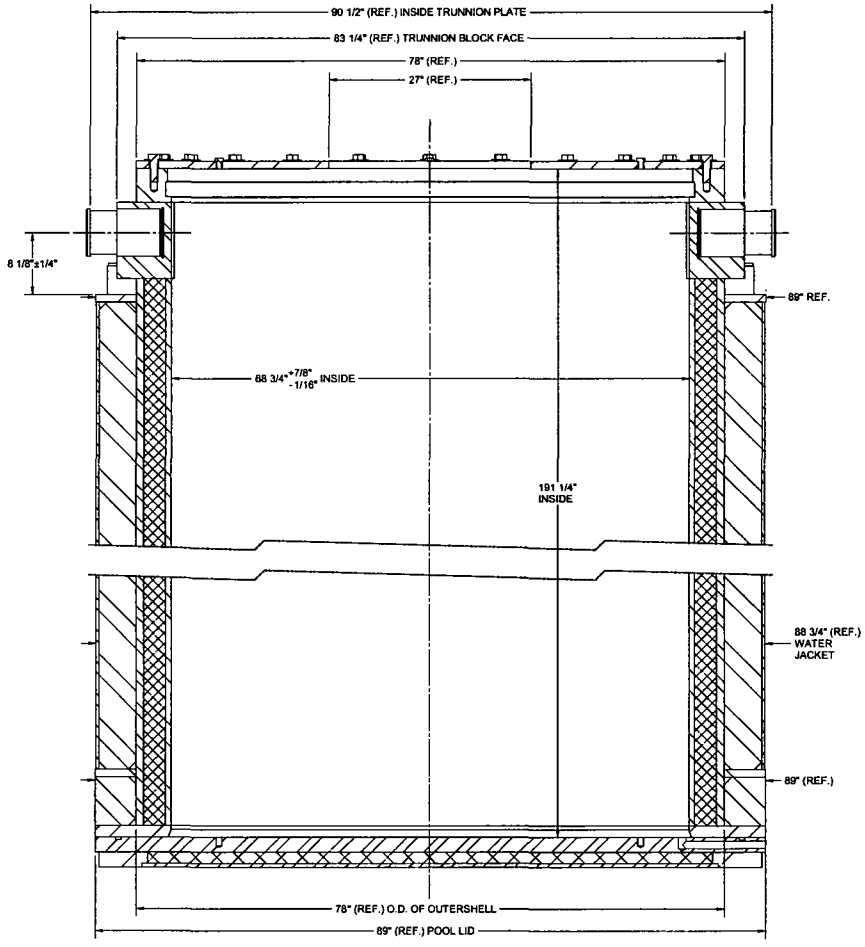

SECTION B-B

"NOTICE: CERTAIN DESIGN AND OPERATIONAL FEATURES OF THIS EQUIPMENT ARE PROTECTED UNDER U.S. PATENT NO. 6,587,536. AN INFRINGEMENT BY ANY ENTITY IS UNLAWFUL."

TOLERANCES

INCHES (MILLIMETERS)		ANGULAR
.X ± .2	(5.08)	±2°
.XX ± .1	(2.54)	
.XXX ± .02	(.50)	

FRACTIONAL

0 TO LESS THAN 2 IN	±1/8 IN
2 IN TO LESS THAN 3 FT	±1/4 IN
3 FT. AND GREATER	±1/2 IN

HOLTEC INTERNATIONAL
HOLTEC CENTER
555 LINCOLN DRIVE WEST
MARLTON, NJ 08053

CLIENT: GENERAL

DESCRIPTION: 100 TON HI-TRAC 100D ASSEMBLY

PROJECT NO.	COMPANION DRAWINGS	SIZE	DRAWING NO.	SHEET	REV
1026	-	D	4128	3	6
N/A		SCALE: NONE	FILE PATH: O:\DRAWINGS\1026\4128		

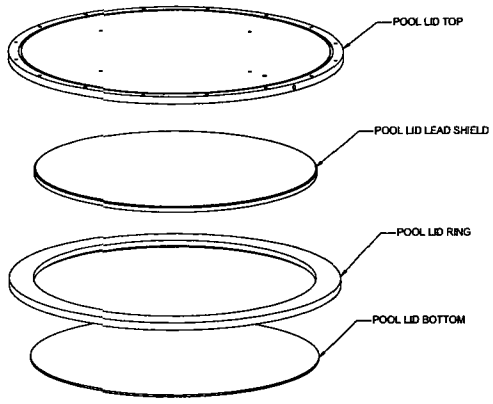

EXPLODED ISOMETRIC VIEW

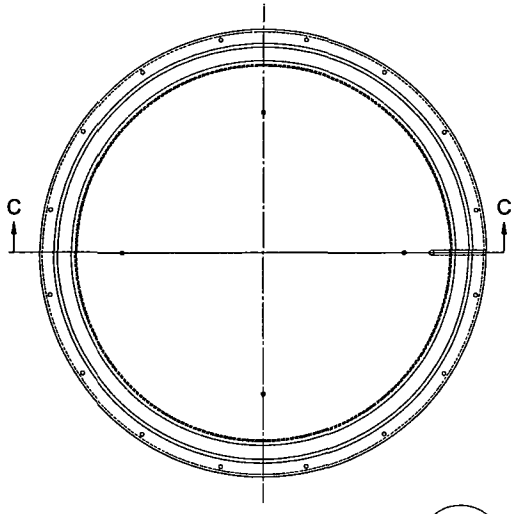

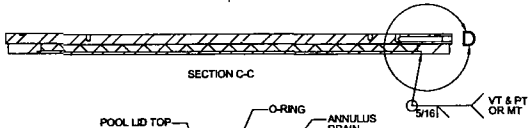

SECTION C-C

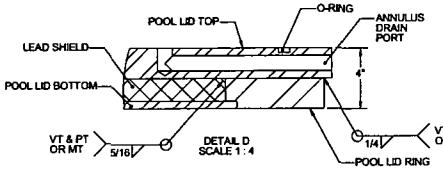

POOL LID WELDMENT

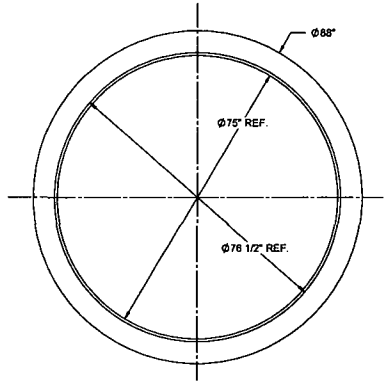

POOL LID RING

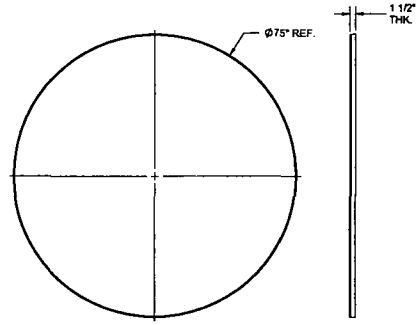

POOL LID LEAD SHIELD

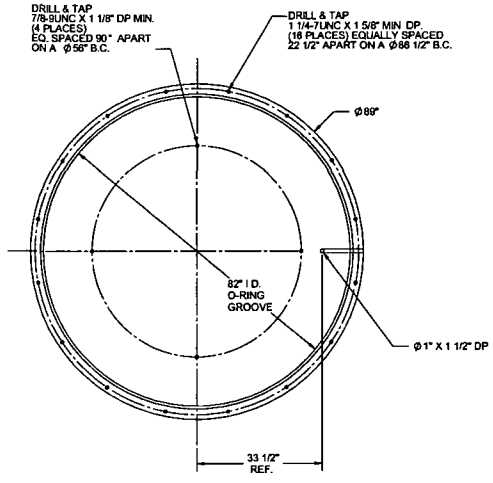

POOL LID TOP

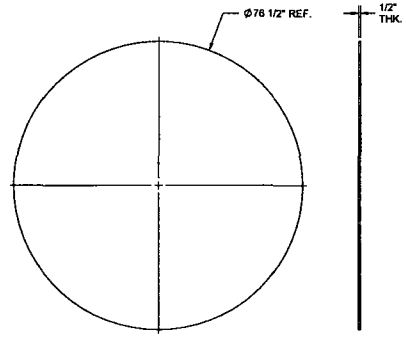

POOL LID BOTTOM

"NOTICE. CERTAIN DESIGN AND OPERATIONAL FEATURES OF THIS EQUIPMENT ARE PROTECTED UNDER U.S. PATENT NO. 6,587,536. AN INFRINGEMENT BY ANY ENTITY IS UNLAWFUL."

TOLERANCES

INCHES (MILLIMETERS)		ANGULAR
.X ± .2	(5.0)	0.5°
.XX ± .02	(0.34)	
.XXX ± .00	(.08)	

FRACTIONAL
0 TO LESS THAN 2 IN ± 1/16 IN
2 IN TO LESS THAN 3 FT. ± 1/64 IN
3 FT. AND GREATER ± 3/64 IN

HOLTEC INTERNATIONAL
HOLTEC CENTER
555 LINCOLN DRIVE WEST
MARLTON, NJ 08053

CLIENT: -

GENERAL

DESCRIPTION:

100 TON
HI-TRAC 100D
POOL LID ASSEMBLY

PROJECT NO.	COMPANION DRAWINGS	SIZE	DRAWING NO.	SHEET	REV.
1026	-	D	4128	4	6
N/A		SCALE: NONE	FILE NAME: G:\24-AWR\CS\1026\4128		

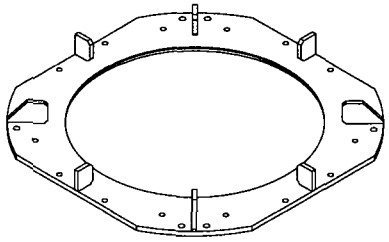

ISOMETRIC ASSEMBLY VIEW

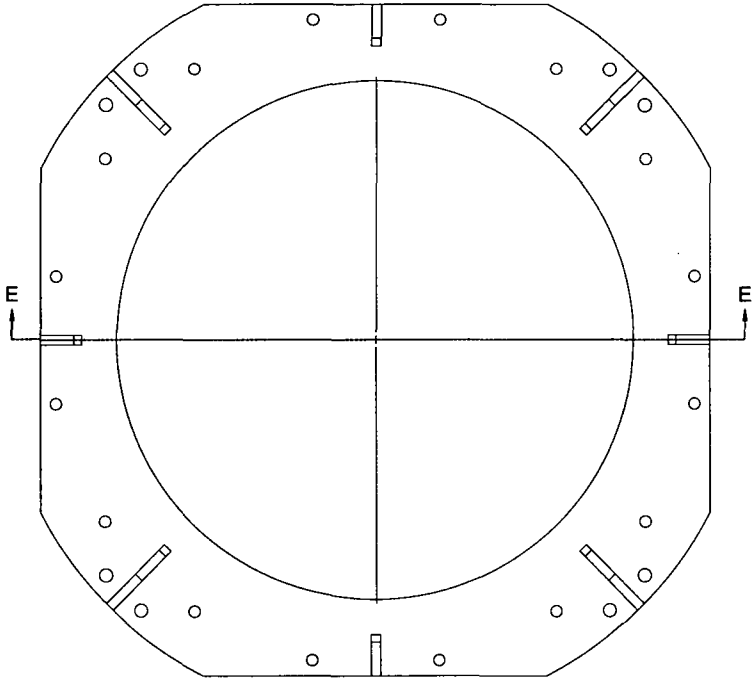

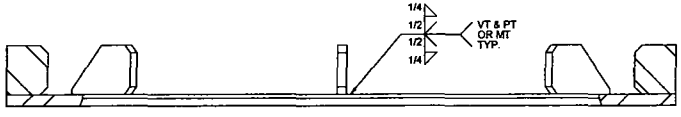

SECTION E-E
SCALE 1 : 8

BASE PLATE WELDMENT

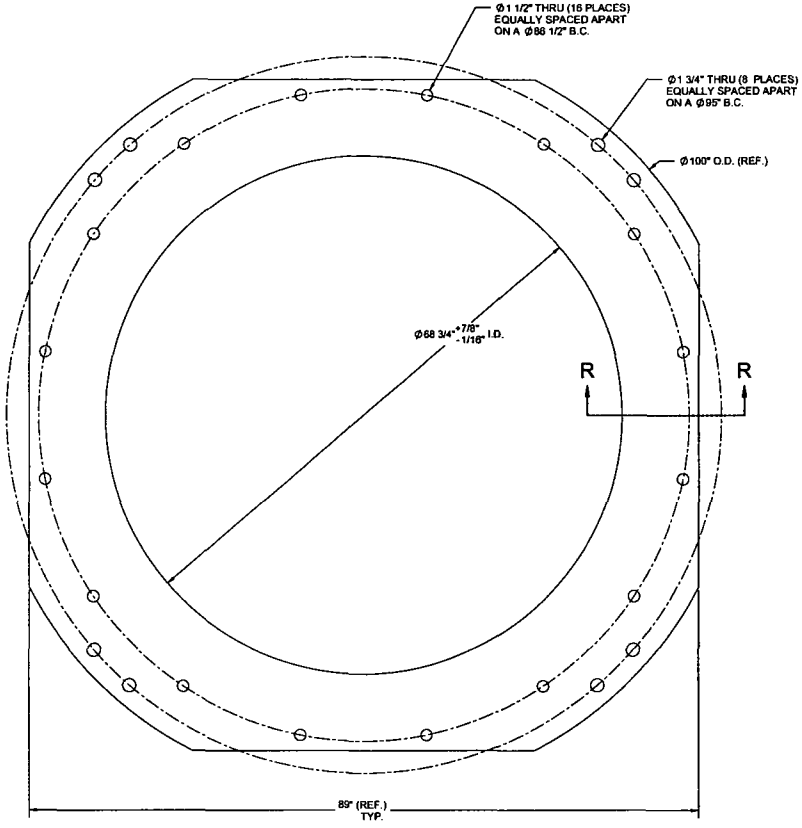

BOTTOM FLANGE

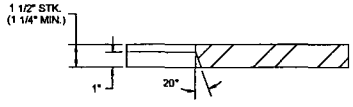

SECTION R-R
SCALE 1 : 4

"NOTICE: CERTAIN DESIGN AND OPERATIONAL FEATURES OF THIS EQUIPMENT ARE PROTECTED UNDER U.S. PATENT NO. 6,587,536. AN INFRINGEMENT BY ANY ENTITY IS UNLAWFUL."

TOLERANCES
INCHES (MILLIMETERS) ANGULAR
X ± 2 (0.5) ±2°
.XX ± 1 (0.04)
.XXX ± .02 (.04)
FRACTIONAL
0 TO 1.999 THRU 2 IN ±1/8 IN
2 IN TO 12.99 THRU 3 FT ±1/8 IN
3 FT AND GREATER ±3/8 IN

HOLTEC INTERNATIONAL
HOLTEC CENTER
555 LINCOLN DRIVE WEST
MARLTON, NJ 08053

COMPANION DRAWINGS

CLIENT: GENERAL

DESCRIPTION: 100 TON HI-TRAC-100D BASE PLATE ASSEMBLY

PROJECT NO.	SIZE	DRAWING NO.	SHEET	REV.
1026	D	4128	5	6
N/A	SCALE 1:1	FILE NAME: C:\DRAWINGS\1026\4128		

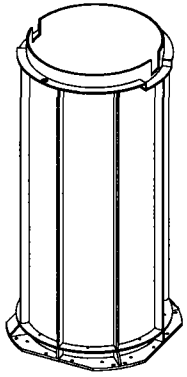

ASSEMBLY ISOMETRIC VIEW

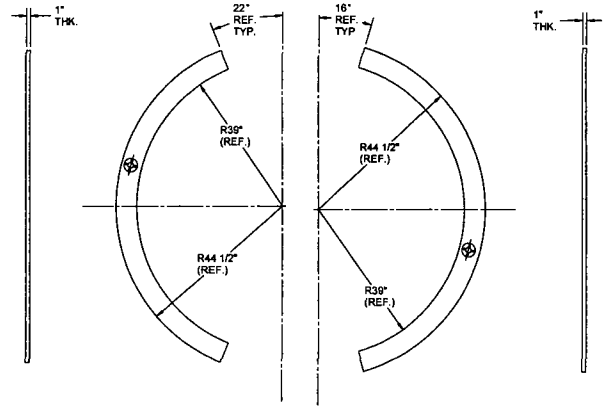

WATER JACKET TOP PLATE

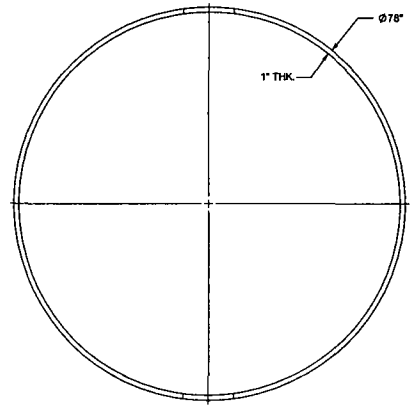

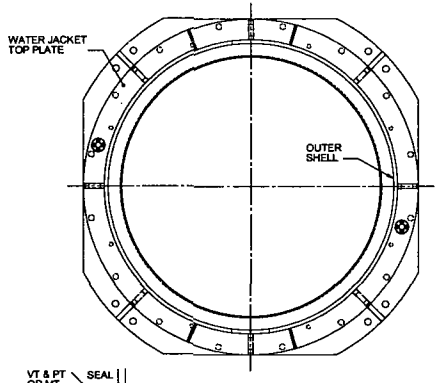

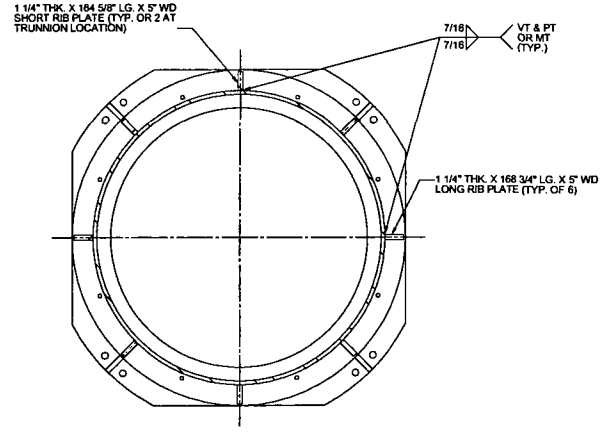

SECTION F-F

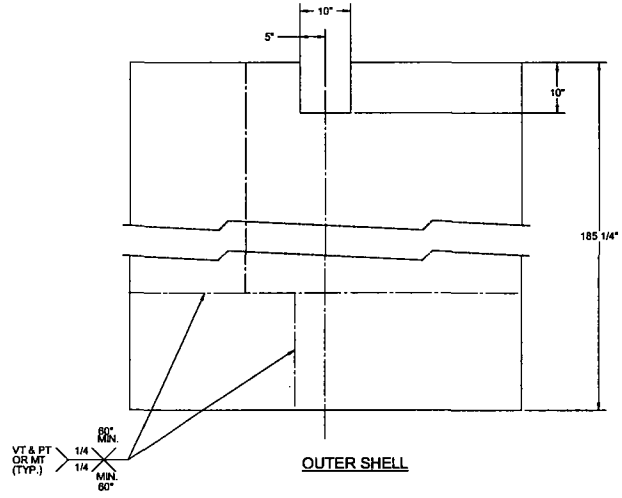

OUTER SHELL

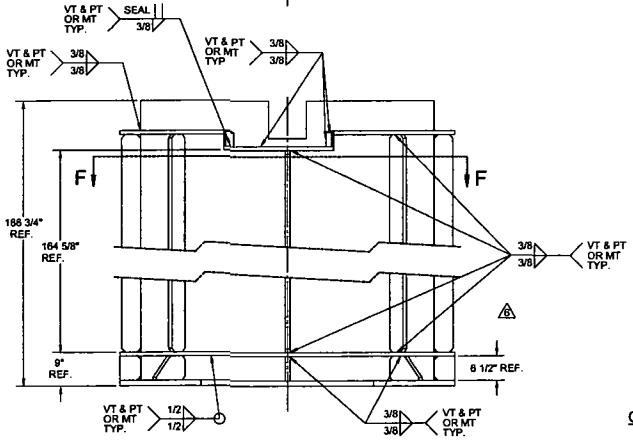

OUTER SHELL WELDMENT

"NOTICE: CERTAIN DESIGN AND OPERATIONAL FEATURES OF THIS EQUIPMENT ARE PROTECTED UNDER U.S. PATENT NO. 6,587,536 AN INFRINGEMENT BY ANY ENTITY IS UNLAWFUL."

TOLERANCES

INCHES (MILLIMETERS)		ANGULAR
X ± 2	(0.5)	±2°
.XX ± 1	(0.25)	
.XXX ± .02	(.05)	

FRACTIONAL

0 TO LESS THAN 2 IN	± 1/8 IN
2 IN TO LESS THAN 3 FT	± 1/4 IN
3 FT. AND GREATER	± 3/8 IN

HOLTEC INTERNATIONAL
HOLTEC CENTER
555 LINCOLN DRIVE WEST
MARLTON, NJ 08053

CLIENT: -

GENERAL

DESCRIPTION:

100 TON
HI-TRAC 100D
OUTER SHELL ASSEMBLY

PROJECT NO. 1026

COMPANION DRAWINGS: -

SIZE D | DRAWING NO. 4128 | SHEET 6 | REV. 6

SCALE: NONE | FILENAME: G:\DRAWING\0810284\128

N/A

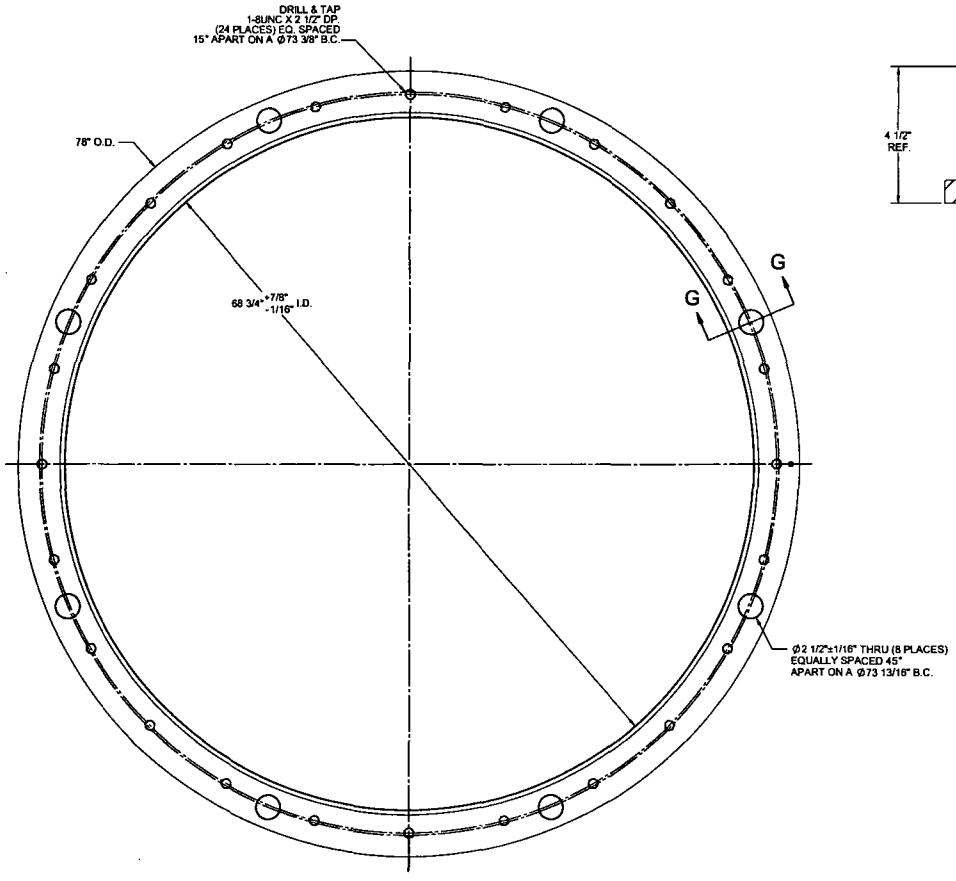

TOP FLANGE

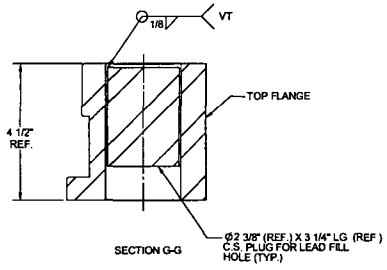

SECTION G-G

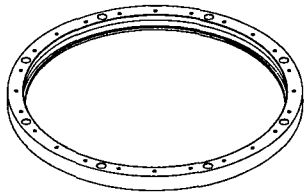

ASSEMBLY ISOMETRIC VIEW

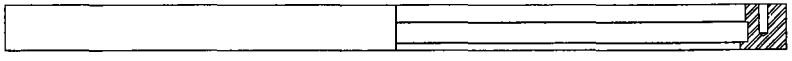

"NOTICE: CERTAIN DESIGN AND OPERATIONAL FEATURES OF THIS EQUIPMENT ARE PROTECTED UNDER U.S. PATENT NO. 6,587,536. AN INFRINGEMENT BY ANY ENTITY IS UNLAWFUL."

TOLERANCES

INCHES (MILLIMETERS)		ANGULAR
X ± .2	(5.0)	±1°
.XX ± .1	(2.54)	
.XXX ± .02	(.50)	

FRACTIONAL

0 TO LESS THAN 2 IN	±1/8 IN
2 IN TO LESS THAN 3 FT	±1/4 IN
3 FT AND GREATER	±3/8 IN

HOLTEC INTERNATIONAL
HOLTEC CENTER
555 LINCOLN DRIVE WEST
MARLTON, NJ 08053

CLIENT: GENERAL

DESCRIPTION: 100 TON HI-TRAC 100D TOP FLANGE ASSEMBLY

PROJECT NO.	COMPANION DRAWINGS	SIZE	DRAWING NO.	SHEET	REV
1026	-	D	4128	7	6
N/A		SCALE: NONE	FILE NAME: O:\DRAWINGS\1026\4128		

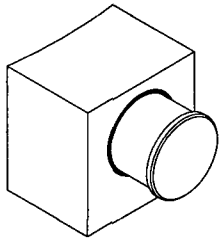

ASSEMBLY ISOMETRIC VIEW

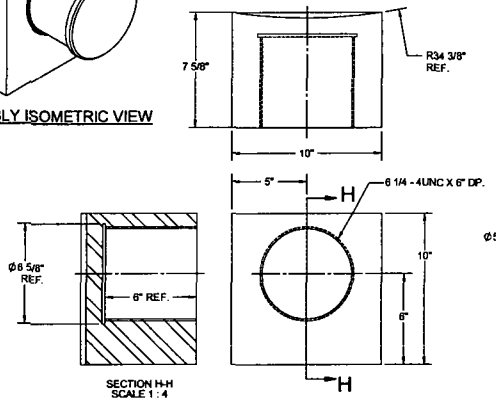

TRUNNION BLOCK

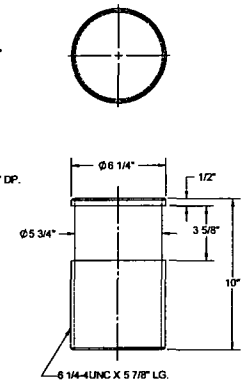

LIFTING TRUNNION

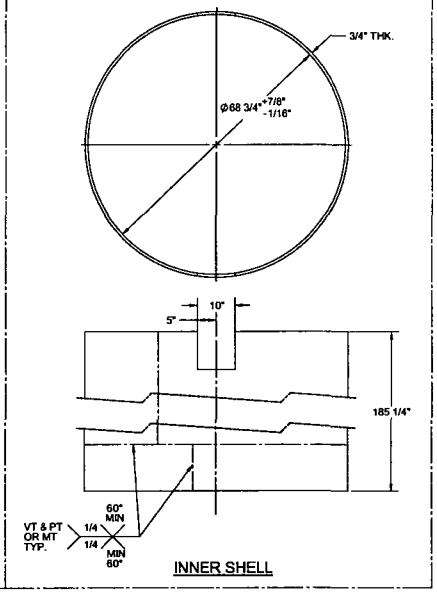

INNER SHELL

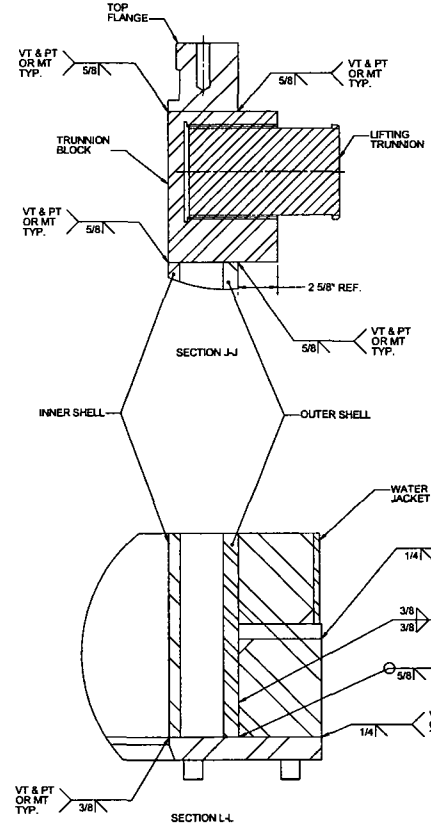

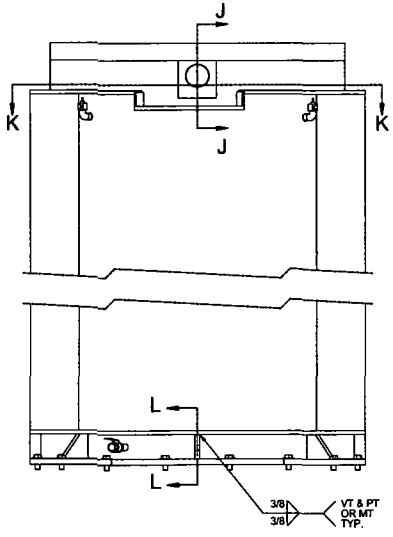

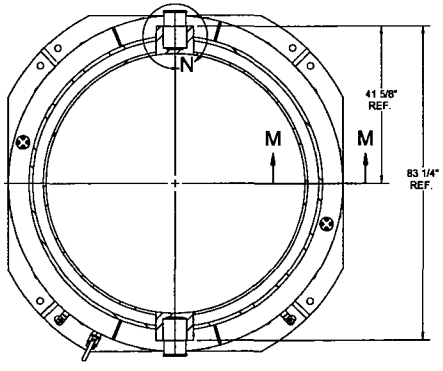

SECTION K-K

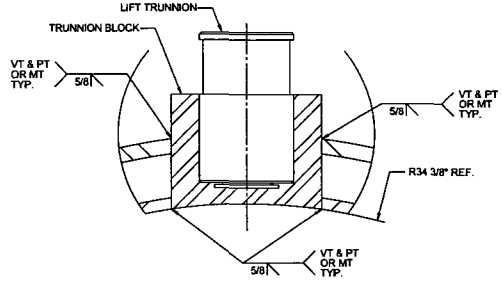

DETAIL N

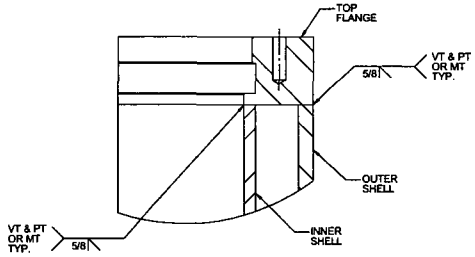

SECTION M-M

"NOTICE: CERTAIN DESIGN AND OPERATIONAL FEATURES OF THIS EQUIPMENT ARE PROTECTED UNDER U.S. PATENT NO. 6,587,536. AN INFRINGEMENT BY ANY ENTITY IS UNLAWFUL"

TOLERANCES

INCHES (MILLIMETERS)		ANGULAR
.X ± .2	(0.5)	±2°
.XX ± .1	(0.3)	
.XXX ± .03	(.08)	

FRACTIONAL

0 TO LESS THAN 2 IN.	± 1/8 IN.
2 IN. TO LESS THAN 3 FT.	± 1/4 IN.
3 FT. AND GREATER	± 3/8 IN.

HOLTEC INTERNATIONAL
HOLTEC CENTER
555 LINCOLN DRIVE WEST
MARLTON, NJ 08053

CLIENT: GENERAL

DESCRIPTION: 100 TON HI-TRAC 100D TRUNNION & SHELL ASSEMBLY

PROJECT NO.	COMPANION DRAWING	SIZE	DRAWING NO	SHEET	REV
1026	-	D	4128	8	6
N/A		SCALE: NONE	FILENAME:		

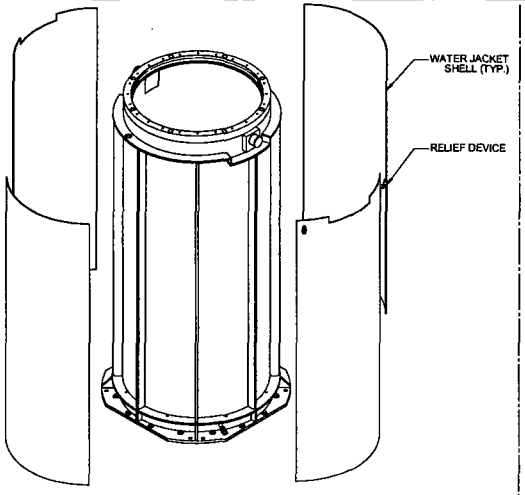

ISOMETRIC ASSEMBLY VIEW

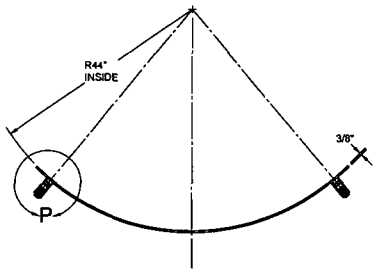

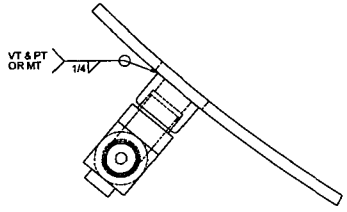

DETAIL P

RELIEF DEVICE

(ACTUAL CONFIGURATION MAY VARY)

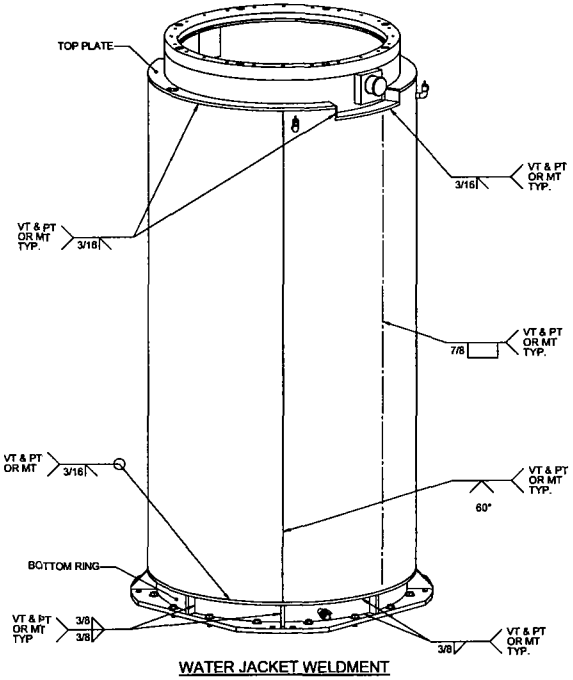

WATER JACKET WELDMENT

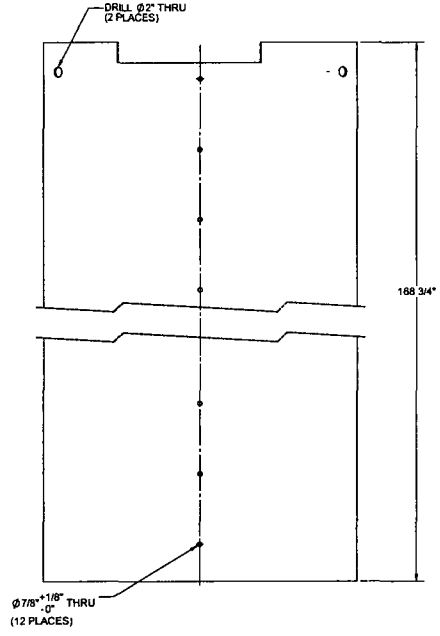

WATER JACKET SHELL

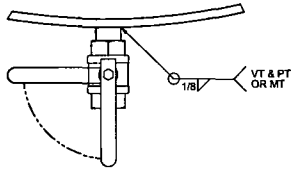

LOWER WATER JACKET DRAIN VALVE

(ACTUAL CONFIGURATION MAY VARY)

"NOTICE: CERTAIN DESIGN AND OPERATIONAL FEATURES OF THIS EQUIPMENT ARE PROTECTED UNDER U.S. PATENT NO. 6,587,536. AN INFRINGEMENT BY ANY ENTITY IS UNLAWFUL."

TOLERANCES

INCHES (MILLIMETERS)		ANGULAR
X.X ± .1	(±.8)	±2°
X.XX ± .02	(±.54)	
X.XXX ± .02	(.08)	

FRACTIONAL

0 TO LESS THAN 2 IN	±1/8 IN
2 IN. TO LESS THAN 3 FT	±1/4 IN
3 FT. AND GREATER	±3/8 IN

HOLTEC INTERNATIONAL

HOLTEC CENTER
555 LINCOLN DRIVE WEST
MARLTON, NJ 08053

COMPANION DRAWINGS: -

PROJECT NO: 1026

N/A

CLIENT: GENERAL

DESCRIPTION: 100 TON HI-TRAC 100D ASSEMBLY

SIZE	DRAWING NO	SHEET	REV
D	4128	9	6

SCALE: NONE

FILE PATH: G:\DRAWINGS\1026\4128

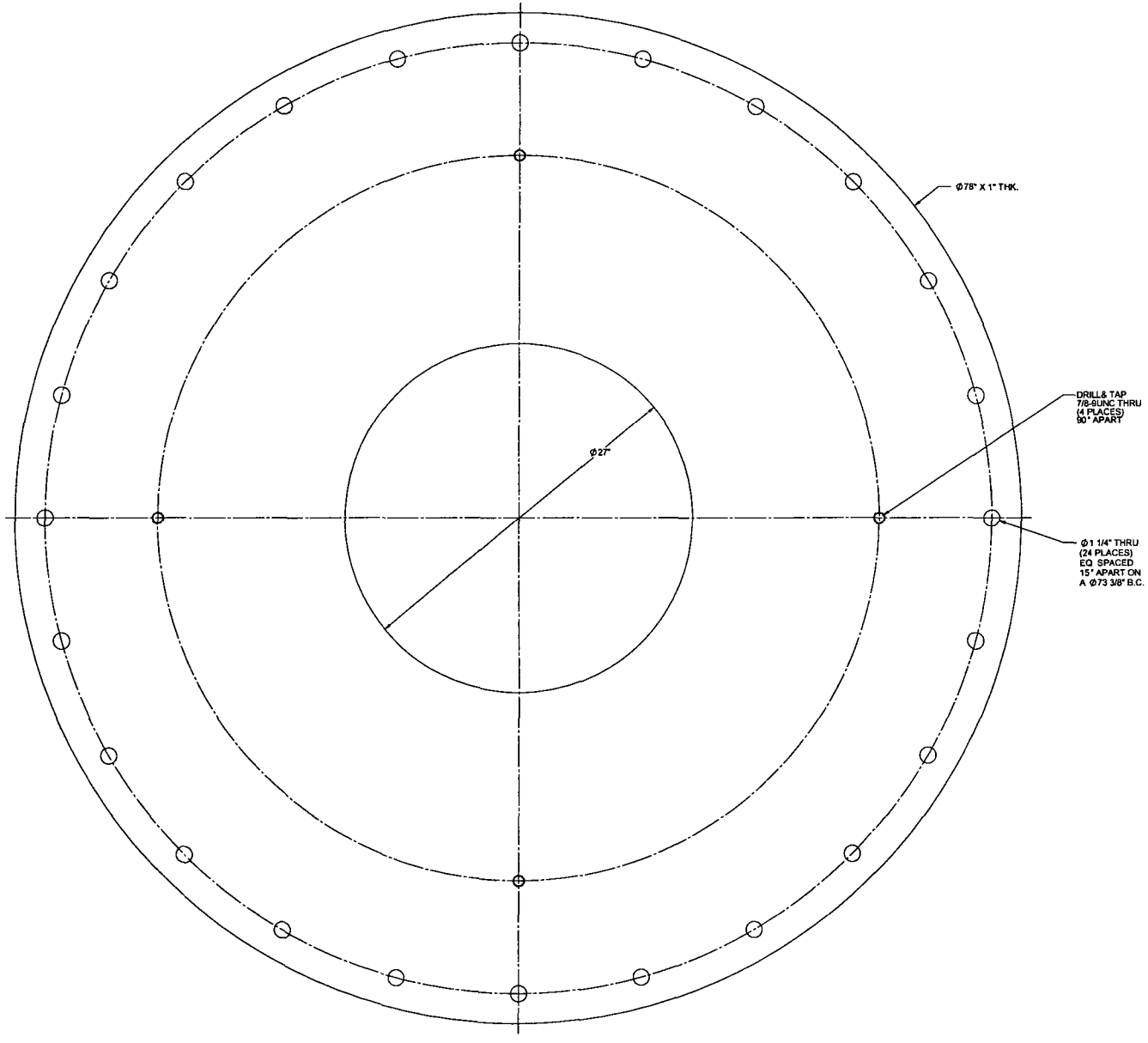

TOP CLOSURE LID

"NOTICE: CERTAIN DESIGN AND OPERATIONAL FEATURES OF THIS EQUIPMENT ARE PROTECTED UNDER U.S. PATENT NO. 6,587,538. AN INFRINGEMENT BY ANY ENTITY IS UNLAWFUL."

TOLERANCES

INCHES (MILLIMETERS)		ANGULAR
.X ± .2	(5.0)	±2°
.XX ± .1	(2.54)	
.XXX ± .02	(.50)	

FRACTIONAL

6 TO LESS THAN 2 IN.	± 1/8 IN.
2 IN. TO LESS THAN 3 FT.	± 1/4 IN.
3 FT. AND GREATER	± 1/8 IN.

HOLTEC INTERNATIONAL
HOLTEC CENTER
555 LINCOLN DRIVE WEST
MARLTON, NJ 08053

CLIENT: -

DESCRIPTION: GENERAL

100 TON
HI-TRAC 100D
TOP CLOSURE LID

PROJECT NO. 1026

COMPANION DRAWING: -

SIZE D | DRAWING NO. 4128 | SHEET 10 | REV 6

SCALE NONE | FILE PATH: G:\DRAWINGS\1102\94-1128

N/A

CHAPTER 2: FUEL ACCEPTANCE CRITERIA AND ENGINEERED MEASURES FOR SAFETY

2.1 Fuel Acceptance Criteria

The principal design parameters of the IP-3 fuel are provided in Table 4.5.1. This fuel is essentially identical to the IP-2 fuel. In order to be eligible for inter-unit transfer in the STC in accordance with the proposed Technical Specifications and analysis presented in this report, the IP-3 SNF must fulfill the following criteria:

i. The fuel must be intact as defined in the glossary.

ii. The initial average assembly enrichment must be less than 5 wt% U^{235}. (Criticality)

iii. It must have burnup less than 55,000 MWD/MTU. (ALARA and Thermal)

iv. The minimum burnup requirement as a function of the initial enrichment when transferring twelve assemblies is shown in Table 4.7.3. (Criticality).

v. Fuel not meeting the minimum burnup requirements may only be loaded in the eight outer or peripheral cells of the STC and the four inner or central cells must remain empty. (Criticality).

vi. It must have a minimum cooling time of 10 years (ALARA and Thermal).

vii. It must meet the decay heat limits given in Chapter 5 for the location in which it is to be loaded. (Thermal)

viii. It may or may not contain non-fuel hardware, with certain restrictions.

Note: For detailed fuel acceptance criteria, refer to LCO 3.1.2 of the Technical Specification

2.2 Safety and Protective Measures

2.2.1 Criticality Safety through Physical Design

The acceptance criteria given in Section 2.1 ensure that the reactivity criteria set forth in Chapter 3 will be met by the SNF that will be loaded in the Shielded Transfer Canister (STC). The above statement is based on comparing the design data that directly affects reactivity of the spent fuel storage devices in the IP-2 SFP (TS Section 4.3) and the IP-3 SFP (TS Section 4.3) and the STC (Reference Drawing 6015) as compiled in Table 2.2.1. The following observations provide the basis for concluding that criticality safety is assured.

i. The areal B-10 density in the STC fuel basket is substantially greater than that in IP-2 and IP-3 Region 2 racks. A greater B-10 loading corresponds to reduced reactivity.

ii. The thickness of the stainless steel walls in the STC fuel basket is considerably greater than that in the fuel racks in either pool. An increased mass of stainless steel reduces reactivity.

The above comparisons lead to the conclusion that the same criticality safety of the spent fuel stored in either pool is automatically assured in the STC fuel basket.

2.2.2 Criticality Safety through Assured Boron Concentration

The fuel transferred to the STC is surrounded by its native environment in the pool, which is the pool's borated water. After the STC is raised from the pool, the boron concentration in the STC cavity will remain the same as the pool. If water needs to be added to the STC administrative controls will be in place to ensure the correct level of soluble boron is present as directed in Chapter 10. The presence of soluble boron in the STC cavity adds another layer of safety against violation of the postulated reactivity limit in Chapter 3.

2.2.3 Release Protection by Multiple Barriers

The proposed inter-unit transfer operation incorporates three *independent* barriers against release of radioactivity to the environment, namely:

i. The fuel cladding (only intact fuel is permitted to be transferred)

ii. The pressure tested STC is qualified to withstand a normal internal pressure of 50 psig (see Chapter 3). The STC seals are tested and assured to be "leaktight" in accordance with ANSI N14.5.

iii. The HI-TRAC 100D Transfer Cask is qualified to withstand a normal internal pressure of 30 psig.

The number of barriers against release of radiological matter to the environment during the transfer process between the two fuel buildings, therefore, exceeds that present in wet storage in any fuel pool.

2.2.4 Protection by a Favorable Thermal-Hydraulic Environment

As shown in Chapter 5, the thermal-hydraulic environment around the spent nuclear fuel in the STC basket is considerably more benign than that in the reactor vessel (where the peak water temperature is approximately 600°F or 315°C). The bounding fuel cladding temperature in the STC, presented in Table 5.4.1, is significantly lower by ~360 °F or 200 °C. The empirical Arrhenius rule used to estimate the rate of chemical action (attack) on metals holds that the rate of reaction doubles with every 10°C rise in the aqueous temperature. Therefore, the thermal environment to which the fuel is subjected in the reactor is significantly more aggressive than in the STC's. Therefore, the risk of degradation of the fuel cladding during the transfer operation is ruled out.

2.2.5 Protection by the Selection of Low Dose Emitting Fuel

From the population of fuel in the IP-3 pool, the specific SNFs selected for the inter-unit transfer shall have achieved a sufficient decay time so as to meet the heat load limit in Chapter 5. As the radiation emitted by the fuel decreases exponentially with the passage of time, the batch selected for transfer will have a correspondingly low dose accretion rate. This is borne out by the shielding analysis summarized in Chapter 7 where it is shown that the effect on the site boundary dose of a HI-TRAC 100D loaded with STC when it is outside the Part 50 structure is negligible.

2.2.6 Protection by Use of Proven Equipment

The HI-TRAC 100D Transfer Cask which serves as a principal radiation barrier in the inter-unit transfer operations is a proven piece of equipment through multiple uses in the IP-2 dry storage campaign mentioned in Section 1.1. The radiation shielding capacity of the HI-TRAC 100D is described in the FSAR [K.A] and demonstrated by measurement. Therefore, the safety of the inter-unit transfer operation is ensured to be ALARA.

2.2.7 Protection by Material Selection

The STC and HI-TRAC 100D are two principal components whose materials of construction must be assured from an adverse performance.

As discussed in Chapter 8, the materials used in the manufacture of the STC are of the same genre as used in the fabrication of casks and fuel baskets in Holtec's dry storage program. The suitability of these materials, including surface preservatives, has been endorsed by the USNRC on several active Holtec dockets. Therefore, the risk of an anomalous performance by an STC material is unlikely.

The HI-TRAC 100D Transfer Cask is, as mentioned above, a proven hardware having been used in a virtually identical environment in the IP-1 and IP-2 dry storage campaign. Therefore, the risk of a material malfunction during the inter-unit transfer campaigns is unlikely.

2.2.8 Reliability through Increased Structural Margins

As summarized in Chapter 6 herein, the SSCs proposed for use in the inter-unit transfer program have been engineered with significantly larger structural margins of safety than required to meet the applicable design criteria.

Specifically:

i. The STC is engineered to maintain the stress levels in its pressure boundary to well below the Code allowables.

ii. The tensile strength of the flange bolts in the STC is considerably larger than that required to maintain the joint seals.

iii. The HI-TRAC 100D will maintain its stress levels when subject to the Design Pressure values that are considerably lower than the respective Code allowables.

iv. Special lifting devices such as the lift yoke, the lift lock and other lifting appurtenances are designed to meet the stress limits of ANSI N14.6 and NUREG-0612, Section 5.1.6.(1)(a) with ample margins. These special lifting devices will be load tested in accordance with ANSI N14.6 prior to use. Other lifting interfaces such as the trunnions, the STC and HI-TRAC lid lifting points are designed per guidance from NUREG-0612, Section 5.1.6 (3).

v. The IP-2 and IP-3 cask handling cranes will be single-failure-proof and comply with NUREG-0554 and NOG-1-2004. The vertical cask transporter also has a redundant drop protection feature.

The above attributes of the STC, HI-TRAC 100D and the lifting equipment ensure that the SSCs involved in the inter-unit transfer operation shall not suffer from a structural malfunction or failure.

2.2.9 Protection by Design to Prevent Inadvertent Water Loss

The STC is welded cylindrical layered (steel-lead-steel) canister with a welded steel base plate. The top lid is bolted and sealed using an elastomeric seal which will be leak tested to the criterion of ANSI N14.5 Section 7.6 prior to transfer. The vent and drain port seal will also be leak tested to the same criterion. There are no penetrations in the STC which allow a release of water after it is sealed. There is no malfunction or accident which would cause a loss of water from the STC cavity.

The HI-TRAC is a welded cylindrical vessel with a bolted top lid, containing an elastomeric seal, and a bolted pool (bottom lid), containing an elastomeric seal and pipe plug in Pool Lid drain. These seals and plug will be pressure tested to ensure no leakage of water can occur. There are no other penetrations which will allow a release of water after it is sealed. During operations, the water levels in the HI-TRAC will be monitored and maintained at the required levels. There is no malfunction or accident which would cause a loss of water from the HI-TRAC cavity.

Table 2.2.1

COMPARISON OF REACTIVITY-INFLUENTIAL DATA

	Item	STC Fuel Basket	IP-2 Region 2-2 Racks	IP-3 Region 2 Racks
1.	B-10 areal density, g/cm^2	0.031	0.026	0.020
2.	Nominal thickness of stainless steel cell walls, in.	0.281	0.075	0.085

Chapter 3: Principal Design Criteria, Applicable Loads, and Service Life

3.1. Governing Regulatory Requirements

3.1.1. Criticality

The fuel basket in the STC, as described in Section 1.3, consists of a honeycomb assemblage of prismatic cells with one panel of the Metamic neutron absorber attached to each stainless steel cell wall. From the reactivity control standpoint, the fuel basket simulates the Region 2 storage racks in IP-3, albeit with a larger cell-to-cell pitch and a greater B-10 loading. (The IP-2 racks were supplied by Holtec International). The IP-3 racks were provided by a supplier, now owned by Holtec International. The fuel transferred to the IP-2 pool is required to have accumulated the burnup so that it can be storable in both IP-2 and IP-3 pools. However, in recognition of the special operation of the STC, a more conservative approach is used for the criticality analyses than typically applied in spent fuel pools. This results in a required minimum burnup as a function of enrichment, as specified in Table 4.7.3, that is higher than that of IP-3 Region 2 and IP-2 Region 2-2 racks. IP3 fuel will be stored at IP-2 in accordance with IP-2 TS 3.7.13. The following criticality safety requirements apply:

i. The effective neutron multiplication factor (k_{eff}) shall be less than 0.95 with the STC fully loaded with fuel of the highest anticipated reactivity and the STC cavity flooded with unborated water at a temperature corresponding to the highest reactivity. The maximum calculated reactivity shall include a margin for uncertainty in reactivity calculations including manufacturing tolerances and shall be shown to be less than 0.95 with a 95% probability at a 95% confidence level.

ii. Reactivity effects of abnormal and accident conditions shall be evaluated to assure that under all credible abnormal and accident conditions, the reactivity will not exceed the regulatory limit of 0.95, with credit for soluble boron to offset the accident condition.

Applicable codes, standard, and regulations or pertinent sections thereof, include the following:

- Code of Federal Regulations, Title 10, Part 50, Appendix A, General Design Criterion 62, "Prevention of Criticality in Fuel Storage and Handling."

- USNRC Standard Review Plan, NUREG-0800, Section 9.1.1, Criticality Safety of Fresh and Spent Fuel Storage and Handling, Rev. 3 – March 2007.

- USNRC letter of April 14, 1978, to all Power Reactor Licensees - OT Position for

Review and Acceptance of Spent Fuel Storage and Handling Applications (GL-78-011), including modification letter dated January 18, 1979 (GL-79-004).

- USNRC Regulatory Guide 1.13, Spent Fuel Storage Facility Design Basis, Rev. 2, March 2007.

- ANSI ANS-8.17-1984, Criticality Safety Criteria for the Handling, Storage and Transportation of LWR Fuel Outside Reactors.

- Code of Federal Regulations, Title 10, Part 50, Section 68, "Criticality Accident Requirements"

For the more conservative criticality methodology, which applies parts of the approach used under Code of Federal Regulations, Title 10, Part 71, sections of the following guidances apply:

- NUREG-1617, "Standard Review Plan for Transportation Packages for Spent Nuclear Fuel" USNRC, Washington D.C., March 2000.

- USNRC Interim Staff Guidance 8 (ISG-8), Revision 2, "Burnup Credit in the Criticality Safety Analyses of PWR Spent Fuel in Transport and Storage Casks".

3.1.2. Shielding

The STC provides shielding to maintain occupational exposures ALARA in accordance with 10CFR20, while also maintaining the maximum load on IP-3's crane hook to below the rated capacity of the crane. The calculated dose rates around the loaded STC are reported in Chapter 7. The calculated dose rates around the loaded HI-TRAC are also reported in Chapter 7. These dose rates are used to perform an occupational exposure estimate for the transfer operations. A postulated HI-TRAC accident condition where there is a loss of water in the water jacket (i.e. the neutron shield), is also evaluated in Chapter 7.

The shielding criteria are derived from 10 CFR Part 20, 10 CFR Part 100, 10CFR72.104 and 10CFR72.106 which provide radiation dose limits for any real individual located at or beyond the nearest boundary of the controlled area (as defined in Part 20). For accident conditions the acceptance criteria from 10 CFR 72.106 were used rather than 10 CFR 100, since the 10 CFR 72 regulations are more restrictive (5 rem for a design basis accident). For normal conditions, the more restrictive dose rate limits from 10CFR72.104 are reported for the nearest controlled area boundary, which is the Hudson River. All other controlled area boundaries are at greater distances. The individual must not receive doses in excess of the limits given in Chapter 7 for normal, off-normal, and accident conditions.

The objective of shielding is to assure that radiation dose rates at key locations are as low as practical in order to maintain occupational doses to operating personnel As Low As Reasonably Achievable (ALARA) per 10 CFR 20.1201 and to meet the requirements of 10CFR 72.104 and 10CFR 72.106 for dose at the controlled area boundary. Three locations are of particular interest during the inter-unit transfer operations are:

- immediate vicinity of the STC and HI-TRAC
- protected area boundary
- owner controlled area (site) boundary

Dose rates in the immediate vicinity of the loaded STC and HI-TRAC are important in consideration of occupational exposure. Conservative evaluations of dose rate have been performed and are described in Chapter 7.

There are no expected radioactive effluents that result from transfer operations as the STC will be tested in accordance with ANSI N14.5 to the "leaktight" criterion as described in Chapter 8.

Detailed operating procedures for the inter-unit transfer shall be prepared based on Chapter 10, and site-specific requirements, including the Part 50 Technical Specification of IP-2 and IP-3 in keeping with ALARA.

As discussed in Chapter 7, ALARA principles in accordance with 10CFR20.1101(b) shall be applied to keep the dose rates and personnel exposures to the lowest possible values.

3.1.3. Thermal

The STC thermal wet transfer evaluation acceptance criteria are stated below:

- The spent fuel cladding temperatures must be below 400 °C in accordance with SFST-ISG-11 Rev.3 [E.K] for short-term operations since no similar regulations/limits exist in 10 CFR Part 50.
- The STC and the HI-TRAC components must remain below the HI-TRAC temperature limits as specified in the HI-STORM 100 FSAR [K.A].
- The STC and the HI-TRAC pressure must be below the pressure limits specified in Table 3.2.1.

The applicable temperature limits are summarized from the above sources in Table 3.1.1. The specified temperature limits in Table 3.1.1 are either equal to or less than those in [K.A] for conservatism.

Finally, the total heat load transferred to the IP-2 fuel pool by the inter-unit transfer in any campaign must be limited by the design basis heat load specified in the IP-2 UFSAR. This limitation is addressed in Chapter 5 of this report.

3.1.4. Structural

3.1.4.1 Overview

The structural qualification of the components used in the inter-unit transfer must consider both normal and accident conditions. Normal condition, as the term implies, is the expected bounding condition that will prevail during the transfer operation. An accident condition is a hypothetical, yet statistically credible event that may have an adverse effect on an SSC or the transfer operation. The object of the criteria is to ensure that the margins of safety under all postulated accidents will remain sufficiently large to preclude any regulatory safety concerns. The SSCs whose safety must be evaluated to support the safety case for the inter-unit transfer are:

i. The Shielded STC (STC)
ii. The Fuel Basket inside the STC
iii. The HI-TRAC 100D Transfer Cask

The STC and its fuel basket are new components whose design criteria are described in this section. HI-TRAC 100D, however, is a cask licensed under USNRC Docket No. 72-1014. Its design basis is fully articulated in the HI-STORM 100 FSAR. However, the HI-TRAC's ability to withstand all normal and accident condition loads applicable to the inter-unit transfer operation are identified and evaluated in this Licensing Report.

The STC is a thick walled fuel transfer device (in contrast to a multi-purpose canister which is a long term storage device) that fulfills the role of a transfer cask to translocate the fuel between the pool and the HI-TRAC inside both IP3 and IP2 Fuel Buildings. The STC serves as a key ALARA mission during the transfer of fuel between the two Fuel Buildings. Because of its thick, multi-layered wall and thick top and bottom lids, the STC also provides an additional barrier against tornado missiles during the movement of the transfer package from IP3 to IP2. Therefore, in its operational function, the STC emulates the HI-TRAC transfer cask. Like a transfer cask the STC must contain a robust level of shielding and be structurally capable of supporting the weight of its fuel payload while meeting the constraints of NUREG-0612 and Reg. Guide 3.61 stress limits at the lifting attachments and Level A stress limits away from the attachment region. Like a transfer cask, the STC is used only during short term operations, it is not intended for use as a long term storage device.

ASME Section III, Subsection NF has historically served as the reference code for fuel transfer equipment. Specifically, the HI-TRAC transfer cask is designated as an "NF, Class 3 plate & shell structure" with certain NRC approved "Code Alternatives", as applicable. Because the STC also serves a pressure containment function, the pressure

vessel counterpart of "NF Class 3" – Subsection ND – is used as the reference Code for the STC. The selection of ND as the reference code for the STC is also suggested by the code classification of similar pool water bearing equipment under part 50: A perusal of nuclear plant FSARs indicates that the pressure vessels and heat exchangers that store, heat, cool or convey fuel pool water are classified as either ASME Section III Subsection ND or Section VIII Division 1.

The typical ASME codes used to qualify the storage canister (Subsections NB or NC) were not preferred compared to Subsection ND for the transfer canister because cyclic fatigue, a core concern of such codes, is not a credible source of failure for the STC. NB and NC (NC-3200) provide design formulas for pressure that allow the vessel to be made thinner than the corresponding ND formulas do. This counterintuitive provision in the "design-by-analysis" codes, such as NB and NC, is intended to reduce the stress amplitudes in the pressure vessel under thermal cyclic conditions (because reduced wall thickness translates to reduced stress amplitudes under thermal transients). Because significant thermal transients are essentially absent from the STC and the number of mechanical loading cycles is relatively small, there is little technical imperative to use NB or NC. Code formulas in ND, as can be ascertained from ND-3324 and its peer paragraphs in NB and NC, yield a greater wall thickness and hence require a thicker wall vessel. The thrust of ND, therefore, is more closely aligned with the objective of an impact-capable robust vessel design intended for the STC.

In summary, the Code assignment for the STC has been made to meet the functional and structural demands on it and to insure that the safety margins are robust. The criteria used in the selection of the appropriate code directly pertain to the structural demands on the component. Equipment subject to a large number of severe thermal transients, for example, is placed within the ambit of NB or NC (NC-3200) to ensure that a complete fatigue analysis is performed and that such qualification is not restricted by the rigidly prescribed wall thickness calculations (thinner walls often produce smaller thermal stresses). NB and NC also assist the designer in the effort to reduce wall thicknesses by allowing a smaller factor of safety against the ultimate strength than ND. Since neither minimizing the wall thickness nor an immunity from a large cycle fatigue (both applicable to an MPC) is a governing consideration for the STC (the thermal cycles are small in number and in amplitude), ND is the most appropriate reference code for the STC. Thus, during short-term operations, the STC is designed to meet the Level A stress limits of the ASME Code, Section III, Subsection ND (2004 Edition).

The components of the single-failure-proof lifting system used to handle the STC and HI-TRAC will meet the guidance in Section 5.1.6 of NUREG-0612 and in ANSI N14.6, as applicable. The IP-3 crane is being upgraded to be single failure proof meeting the requirements of NUREG-0554. Since both the IP-3 and IP-2 cask handling cranes will be single failure proof, a drop accident involving the STC inside the FSB is not credible. The STC will be contained in and carried along the haul path in the HI-TRAC using the site's Vertical Cask Transporter (VCT). The STC weighs less than a loaded MPC (set at 45 tons in the HI-STORM 100 FSAR); therefore the structural analysis of the IP-2 VCT

loaded with the STC is bounded by the analysis performed under Part 72 where the HI-TRAC is loaded with 32 fuel assemblies in an MPC.

The most severe load on the fuel basket inside the STC is a fuel handling accident resulting in a free drop of a fuel assembly onto the top of the fuel basket while the STC is being loaded with fuel. The acceptance criterion for this accident event is that the fuel storage array remains subcritical. In other words, the plastic deformation of the fuel basket cell wall due to the fuel impact must not extend down into the active fuel region.

Additionally, to demonstrate structural compliance under a worst case handling accident condition on the haul path, a non-mechanistic tipover accident of the loaded HI-TRAC 100D shall be performed. The analyses must demonstrate structural integrity, radiological confinement, sufficient shielding, fuel integrity and sufficient thermal performance.

In USNRC Docket No. 72-1014, the HI-TRAC 100D is designed to meet the stress limits of the ASME Code, Section III, Subsection NF (1995 Edition), Class 3. It is also noted that the HI-TRAC 100D, with the new bolted top lid, will be subject to an internal pressure when it is used to transport the STC. The HI-STORM FSAR does not consider any internal pressure loads on the HI-TRAC 100D since the lid used for dry storage contains a large circular hole in the middle. Therefore, the newly designed top lid, as well as the HI-TRAC inner shell and bottom lid, must be evaluated for the effects of internal pressure. For this purpose the stress limits of ASME Section III Subsection ND (pressure vessel code) shall be used.

In the next section, all loadings germane to normal and accident conditions are compiled along with the associated acceptance criteria.

Table 3.1.1

TEMPERATURE LIMITS APPLICABLE TO INTER-UNIT TRANSFER

	Item	Condition	
		Short-Term Operations (Normal)	Abnormal or accident condition
1.	Fuel Cladding	400°C (752°F)	570°C (1058°F)
2.	STC Metal Parts	150°C (302°F)	200°C (392°F)
3.	HI-TRAC Seals[Note 3]	120°C (248°F)	120°C (248°F)
4.	STC Seal[Note 3]	120°C (248°F)	127°C (260°F)
5.	HI-TRAC Metal Parts	150°C (302°F)	200°C (392°F)
6.	HI-TRAC Water Jacket	153°C (307°F)[Note 1]	N/A[Note 2]
7.	HI-TRAC annulus water	134°C (274°F)[Note 1]	148°C (298°F)[Note 1]
8.	STC Water	148°C (298°F)[Note 1]	166°C (331 °F)[Note 1]
9.	Metamic Neutron Absorber	427°C (800°F)	538°C (1000°F)
10.	Fuel Basket	385°C (725°F)	510°C (950°F)

Note 1: The bulk temperature of water must be limited to the boiling temperature of water at the enclosure design pressure (See Table 3.2.1).

Note 2: The water jacket is equipped with safety relief devices to prevent over-pressure during accidents.

Note 3: The temperature rating of seals must meet or exceed the requirements specified herein.

3.2. Applicable (Design, Normal, and Postulated Accident) Loadings

3.2.1. Design Basis Loads

The design pressure and associated design temperature for the STC and HI-TRAC 100D are provided in Table 3.2.1. Both components are required to meet the applicable stress limits under the provisions of ASME Section III Subsection ND, Class 3.

The analysis of the normal and various accident condition loads must show that the internal pressure and temperature remain below their respective limits in Table 3.2.1.

3.2.2. Normal Condition Loads

The operating pressure and temperature under normal operations, presented in Tables 5.3.2 and 5.3.1, respectively; are bounded by the design pressure and temperature in Table 3.2.1 and, therefore, do not require a separate analysis.

3.2.3. Accident Condition Loads

Accident conditions for inter-unit operations belong to two categories, namely:

i. Credible accidents inside Part 50 structure
ii. Credible and non-credible accidents during the transfer of loaded HI-TRAC 100D from IP-3 to IP-2 Fuel Building

3.2.3.1 Accidents Inside Part 50 Structure

The accident conditions postulated are summarized below.

(a) Accidental drop of a fuel assembly: As discussed previously, all heavy load handling evolutions will be performed using single-failure-proof lifting systems. Therefore, an accidental drop of a heavy load inside Part 50 structure is not credible. However, this assertion does not apply to individual spent nuclear fuel (SNF) assemblies which are handled using a tool that does not have redundant drop protection features against an accidental drop. Therefore, the scenario of an accidental drop of an SNF on the fuel basket must be evaluated.

As noted in Generic Letter 78-11, O.T. Position Paper [F.A], a fuel assembly, along with the portion of the handling tool, which is severable in the case of a single element failure, is assumed to drop vertically and hit the top of the fuel basket. Inasmuch as the fuel basket is of honeycomb construction, the

deformation produced by the impact is expected to be confined to the region of collision. However, the "depth" of damage to the affected cell walls must be demonstrated to remain limited to the portion of the cell above the top of the "active fuel region", which is essentially the elevation of the top of the neutron absorber.

Stated in qualitative terms, this criterion implies that the plastic deformation of the fuel box cell walls should not extend beyond the permissible value listed in Table 3.2.2. In order to utilize an upper bound of kinetic energy at impact, the impactor (fuel assembly including the handling tools) shall use bounding weight and height from Table 3.2.2.

Any radioactive release from the drop of the SNF is already analyzed and is presented in the fuel handling dose analysis in Chapter 14 of the UFSAR. This analysis bounds the accidental drop of a fuel assembly being loaded into the STC because the minimum cooling times of the fuel to be transferred to IP-2 (5 years) is significantly longer than the cooling time of the SNF analyzed (84 hours).

(b) Misloading of a fuel assembly into the STC basket: Two different scenarios are addressed to ensure both criticality safety and thermal performance of the STC. Robust administrative controls as discussed in Chapter 10 will be in effect to ensure that either misload condition will not occur. It should be noted that the same procedures and controls are followed as part the fuel selection process for dry cask storage. This verification is performed independently by fuel handing and Reactor Engineering personnel. In addition to these administrative controls, operational controls will also be in place.

(i) For criticality (see Chapter 4), the misloading of a fuel assembly which has not attained required burnup for loading under Configuration 1, as well as the misloading of any fuel assembly into one of the four center STC basket cells in Configuration 2 is addressed. To prevent a misloaded assembly in Configuration 2, a cell blocker device can be used to block the openings of the four center cells during the loading of the STC. A typical cell blocker with dimensions is depicted in Figure 10.2. The cell blocker is made of stainless steel and will cover the four center cells of the STC basket. To prevent a misloaded assembly in Configuration 1, this same device will be used when loading the first eight assemblies and additional visual inspections can be implemented prior to and after loading each of the remaining four assemblies, as described in Chapter 10.

(ii) For defense-in-depth, a misload event (thermal) is defined and evaluated in Section 5.4.4. To provide an additional layer of assurance that a fuel transfer with a misload is prevented, a fuel misload

detection test is conducted as defined in Section 5.3.4. The operational steps are further described in Chapter 10.

(c) Earthquake: The stability of the loaded STC in the spent fuel pool under the site's Design Basis Earthquake (DBE) must be demonstrated by analysis [See Load Case 8 in Chapter 6]. The site's DBE loads are provided in Table 3.2.2.

3.2.3.2 Accident Scenarios Outside Part 50 Structure

Most accident scenarios during the brief period (normal duration of transfer will most likely occur in one work shift) when the VCT hauls the HI-TRAC from the IP-3 to the IP-2 truck bay thresholds are related to environmental phenomena. Two postulated events not considered environmental are a postulated drop event which can occur when the HI-TRAC is being lifted or lowered and is not securely attached with the redundant drop protection pins to the VCT and a scenario where the duration of the transfer is extended as a result of a postulated VCT breakdown. Table 1.1.4 identifies all the accidents or initiating conditions and discusses the resultant effects. All of these postulated events are summarized below.

(a) Accidental drop of loaded HI-TRAC 100D: The maximum height which the loaded HI-TRAC 100D can be lifted is limited to the value in Table 3.2.2. The lift height of the loaded HI-TRAC will be controlled by placing impact limiters underneath the HI-TRAC as it is raised on the VCT to ensure this limit is not exceeded. Once the locking pins are engaged, attaching the HI-TRAC to the VCT and providing redundant drop protection, the lift height/carry is no longer limited. A drop of the loaded HI-TRAC from the maximum lift height is presented in Load Case 5 in Chapter 6.

(b) Fire: The potential of a fire accident near the VCT during its movement is considered to be extremely remote because there are no significant combustible materials in the area. An evaluation of the haul path will be performed to ensure the fire accident considered in this licensing report bounds any site specific scenario. Transitory hazards will be controlled with administrative procedures.

The HI-TRAC 100D transfer cask fire accident is conservatively postulated to be the result of the spillage and ignition of 50 gallons of combustible fuel which engulfs the HI-TRAC. The HI-TRAC transfer cask surfaces are considered to receive an incident radiation and forced convection heat flux from the fire. Table 3.2.3 provides the fire durations for the HI-TRAC 100D based on the amount of flammable materials assumed. The temperature of fire is assumed to be 1475°F to accord with the provisions of 10CFR71.73 since no guidance is supplied in Part 50.

(c) Lightning: The effect of a lightning strike on the transfer cask is considered in the Entergy HI-STORM 100 Cask System 72.212 Evaluation Report, IPEC Site Specific Appendix F [U.B] where it is determined that lightning will not impair the safety function of the cask. Lightning may however cause an ignition of the transporter fuel. That scenario is considered above. Therefore, this loading is not considered further in this Licensing Report.

(d) Earthquake: The stability of the loaded VCT and the loaded HI-TRAC standing alone under the site's Design Basis Earthquake (DBE) will be demonstrated by analysis [See Load Case 6 & 7 in Chapter 6]. The site's DBE loads are provided in Table 3.2.2.

(e) Flood: Potential sources for the flood water could be unusually high water from a river or stream, a dam break, or a hurricane. The plant UFSAR states "Flooding at the site has been nonexistent. The highest recorded water elevation at the site was 7.4 feet above mean sea level during an exceptionally severe hurricane in November, 1950. Since the river water elevation would have to reach 15 feet 3 inches above mean sea level before it would seep into the lowest floor elevation of any of the Indian Point buildings, the potential for any flooding damage at the site appears to be extremely remote." The IP-2 and IP-3 FSB truck bay and transport haul path are well above the lowest building elevation and would require a rise in the river of over 55 feet to cause flooding; therefore the affect of the flood on the VCT is not considered credible and is not specifically analyzed.

(f) Environmental Loadings: The loadings from an extreme environmental phenomena, such as high winds, tornado, and tornado-borne missiles, as specified for the 48 contiguous states in Reg. Guide 1.76, ANSI 57.9, and ASCE 7-88, are considered in the certification of HI-TRAC 100D in Docket No. 72-1014. These loadings bound the environmental loadings at IPEC. Therefore, a site-specific analysis for the inter-unit transfer operation is not required.

(g) Loss of Water in the Water Jacket: As a conservative measure, the water in the water jacket of HI-TRAC 100D is assumed to be lost. The resulting increase in the site boundary dose must be quantified to demonstrate compliance with the specified annual site boundary dose limit (see Table 7.4.5). Pressure and temperature limits must also be assured (see Section 5.4.1).

(h) Extended time of STC residence in the HI-TRAC: This accident condition postulates that, for whatever reason, the STC is kept in the transfer cask for an extended period. Theoretically, this condition will result in a gradual heat up of the cask. The thermal hydraulic analyses in Chapter 5 are carried out assuming that the duration of the STC-in-HI-TRAC condition is infinite so that steady state condition has been reached. Thus the "VCT breakdown" scenario is

subsumed in the normal condition thermal analysis in Chapter 5. For site boundary dose calculations, the HI-TRAC cask is assumed to be between the two Fuel Buildings for 30 days (normal duration of transfer will be a few hours in one work shift).

(i) Collapse of the roadway during transfer, resulting in a cask rollover [F.G]: This event is considered to be non-credible based on the following discussion.

First, the collapse of the roadway is considered to be a non-credible accident condition for the following reasons:

(1) The VCT will travel an approved route starting at the IP-3 cask loading area and traveling to the IP-2 cask loading area that have been evaluated (ground penetrating radar and/or soil compaction studies). Since the site is situated on bedrock there is already an excellent base.
(2) The roadways at the site are qualified for H20 loads (typical tractor trailer loads) and the VCT loads on the roadway are similar, however the roadway will be upgraded to support the VCT with a loaded HI-STORM (with MPC) which bounds the case for the VCT with the loaded STC in the HI-TRAC. The haul path is hardened with the installation of concrete roadways and turning pads for the VCT to travel on and to eliminate significant degradation to the haul path surface.
(3) A portion of the load path has already been analyzed and used multiple times as part of the IP-2 and IP-1 dry storage campaigns. That analysis is considered bounding since the VCT carrying a loaded MPC inside the HI-STORM weighs more than the VCT carrying a loaded STC inside the HI-TRAC.
(4) Prior to each transfer, the roadway will also be visually inspected and repaired as necessary.

Second, in the unlikely event that the roadway were to collapse, the VCT can withstand an eight foot depression of the roadway, in the most limiting configuration (one track of the VCT being eight feet above the other), without tipping over. This orientation of the VCT is considered bounding since the tracks of the VCT are longer than the width of the VCT. As can be seen in Figure 3.2.1(a) the HI-TRAC is fully restrained in the VCT to stabilize the HI-TRAC during the transfer. Figure 3.2.1(b) shows the VCT with eight feet of ground removed from under one track. Even in this most extreme scenario the center of gravity (c.g.) of the VCT carrying the HI-TRAC remains low enough so that a tip-over (c.g. over corner) can not occur.

However, as a defense-in-depth measure, a non-mechanistic tipover accident of the loaded HI-TRAC transfer cask is performed to demonstrate that there will be no degradation in the margin of safety engineered in the STC and the HI-

TRAC. Additional details of this hypothetical accident condition are presented in Chapter 6.

(j) Large radioactive release from the cask [F.G]: A large radioactive release from the STC is not considered credible for the following reasons. The design of the closure and the seals on the STC will mimic the design of the closure and seals on a licensed transportation cask [K.E]. The STC and HI-TRAC closure seals are elastomeric seals, conservatively specified to provide a high degree of assurance of sealing function under normal and accident conditions. The STC and HI-TRAC seal leakage testing shall be performed per written and approved procedures and in accordance with the requirements of ANSI N14.5 [B.T]. Criteria and basis for leak rate and leakage testing criteria are discussed in Chapter 7 and 8. In addition, analysis in Chapter 6 demonstrates that even if in the most extreme condition (non-mechanistic tipover) the STC, HI-TRAC, and the respective seals will remain intact and continue to confine the loaded contents making a large radioactive release non-credible.

3.2.4 Load Cases

Based on the design, normal condition, and accident condition loads identified in the preceding subsections, a series of governing load cases that require structural analysis are defined in Table 3.2.4.

Table 3.2.1 INTERNAL PRESSURE AND TEMPERATURES			
Component	Design Pressure, psig	Accident Pressure, psig	Design Temperature, °F
STC	50	90	Table 3.1.1
HI-TRAC 100D	30	50	Table 3.1.1
HI-TRAC Water Jacket	60	60[Note 1]	Table 3.1.1
Note 1: The pressure limit must be complied with under all accident conditions except fire accident. Under fire accident, the water jacket is assumed to have lost all water thru the pressure relief devices.			

Table 3.2.2 LIMITING OPERATION PARAMETERS	
Item	**Limit**
Maximum permissible lift height of HI-TRAC 100D in the VCT	6 inches.
Maximum permissible plastic deformation of the fuel box cell wall (downwards) from top of box cell	4.125 inches.
Bounding weight of the fuel assembly	2000 lb.
Minimum ambient temperature	0 °F
Maximum ambient temperature	100 °F
Weather Forecast	No snow or lightning. Maximum wind speed < 20 mph
Haul Path Condition	No ice or snow on the haul path
Design Basis Earthquake (ZPAs)	Horizontal: 0.15g's Vertical: 0.10g's

Table 3.2.3 DEFINITION OF THE FIRE CONDITION LOADING*	
Fire duration	4.8 minutes
Flame temperature	1475°F
Maximum Ambient Temperature	100°F

* Based on the fire event data in the HI-STORM 100 FSAR

Table 3.2.4

GOVERNING CASES AND AFFECTED COMPONENTS

Case	Loading Event	Affected Components			Objective of the Analysis
		HI-TRAC	STC	VCT	
1	Design Internal Pressure HI-TRAC and STC under the Design Internal Pressure	X	X	—	Demonstrate that the HI-TRAC and STC meets "ND" stress limits.
2.	Normal Operating Pressure plus Temperature HI-TRAC and STC under normal operating pressure plus temperature	X	X	—	Demonstrate that the HI-TRAC and STC meets "ND" stress limits.
3	Normal Handling Lifting of HI-TRAC and STC including dynamic effects	X	X	—	Demonstrate that the acceptance criteria in Subsection 6.2.3 will be met.
4	Fuel Assembly Drop Accident A dropped fuel assembly plus handling tool impacts the top of the fuel basket.	—	X	—	Demonstrate that the acceptance criteria in Subsection 3.2.3.1 will be met.
5	HI-TRAC Vertical Drop Accident Vertical end drop of loaded HI-TRAC from maximum lift height	X	—	—	Demonstrate that the peak deceleration is less than 45g.
6	Seismic Stability of Loaded VCT Loaded VCT subjected to Design Basis Earthquake (DBE)	—	—	X	Demonstrate that the loaded VCT will remain stable under DBE conditions.
7	Seismic Stability of Loaded HI-TRAC Loaded HI-TRAC subjected to Design Basis Earthquake (DBE)	X	—	—	Demonstrate that the loaded HI-TRAC will remain stable under DBE conditions.
8	Seismic Stability of Loaded STC in Fuel Pool Loaded STC subjected to Design Basis Earthquake (DBE)	—	X	—	Demonstrate that the loaded STC will remain stable under DBE conditions.
9	Postulated Tipover Accident of the Loaded HI-TRAC Loaded HI-TRAC transfer cask is subjected to a non-mechanistic tipover accident.	X	X	—	Demonstrate that the peak deceleration in the fuel assembly is less than 60 g. Further, demonstrate continued leak tightness of the STC and HI-TRAC closure joints and thermal stability of the STC.

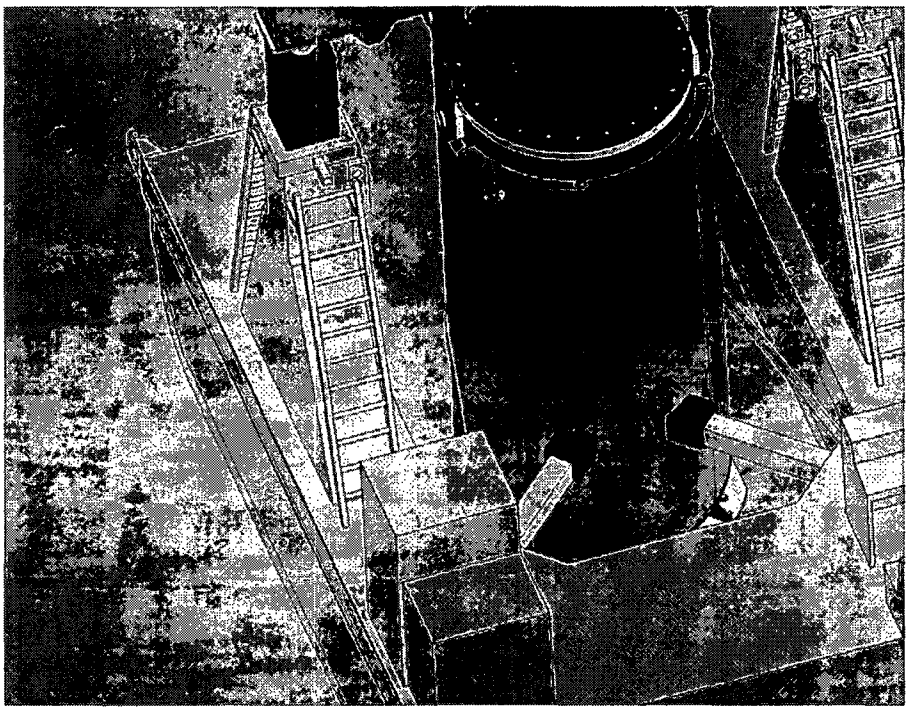

Figure 3.2.1(a) – HI-TRAC restrained in a VCT

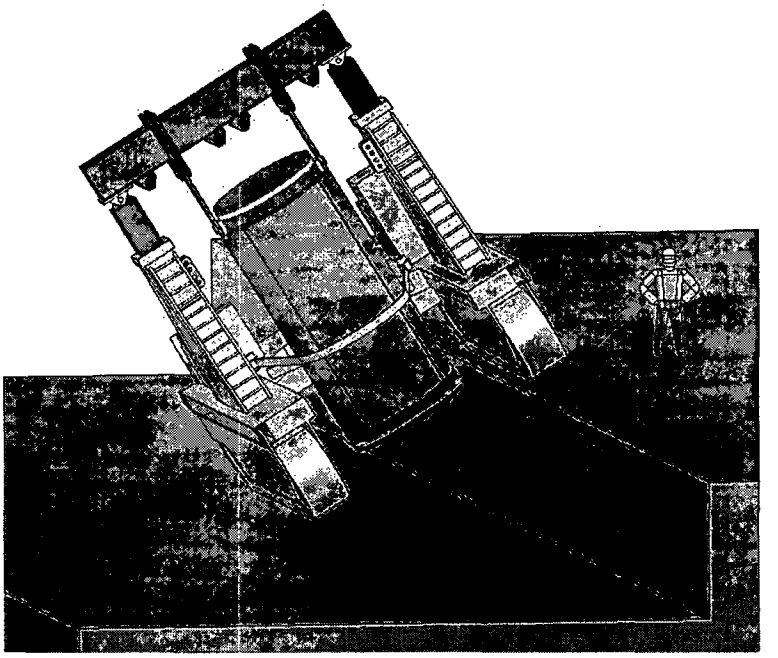

Figure 3.2.1(b) – HI-TRAC on VCT with 8 foot roadway depression

3.3. STC and HI-TRAC Service Life

The HI-TRAC transfer cask is engineered for 40 years of design life, as discussed in Section 3.4.11 of the HI-STORM 100 FSAR [K.A].

The STC is also designed for 40 years of service life. The principal design considerations that bear on the adequacy of the STC for the service life are addressed as follows:

Exposure to Environmental Effects

All STC materials that come in contact with the spent fuel pool are coated to facilitate decontamination. The STC is designed for repeated normal condition handling operations with high factor of safety to assure structural integrity. The resulting cyclic loading produces stresses that are well below the endurance limit of the canister's materials, and therefore, will not lead to a fatigue failure in the STC (see Subsection 6.2.1.1). All other off-normal or postulated accident conditions are infrequent or one-time occurrences that do not contribute significantly to fatigue. In addition, the STC utilizes materials that are not susceptible to brittle fracture during the lowest temperature permitted for loading, as discussed in Section 8.3 of the Licensing Report.

Material Degradation

As discussed in Chapter 8 of the Licensing Report, all STC materials that are susceptible to corrosion are coated. The controlled environment in which the STC is used mitigates damage due to direct exposure to corrosive chemicals that may be present in other industrial applications. The infrequent use and relatively low neutron flux to which the STC materials are subjected do not result in radiation embrittlement or degradation of the STC's shielding materials that could impair the STC's intended safety function. The STC materials are selected for durability and wear resistance for their deployment.

Maintenance and Inspection Provisions

The requirements for periodic inspection and maintenance of the STC throughout the 40-year design life are defined in Chapter 10 of the Licensing Report. These requirements include provisions for routine inspection of the STC for damage prior to each use. Precautions are taken during lid handling operations to protect the sealing surfaces of the closure lid. The leak tightness of the STC pressure boundary is verified periodically.

Finally, based on the current inventory of fuel in the IP3 SFP and the projected discharge schedule through the plant re-license period, the maximum number of fuel transfers (uses) will not exceed 500. This number of uses can be accommodated within the 40 year design life of the STC.

CHAPTER 4: CRITICALITY EVALUATION

4.1 Introduction

This report documents the criticality safety evaluation for the Shielded Transfer Canister (STC) fuel basket containing either fresh or spent fuel assemblies with a nominal initial enrichment of up to 5.0 wt% ^{235}U in one of two analyzed storage arrangements:

- Configuration 1 is analyzed to accommodate fuel in every basket location with a specified minimum burnup. The burnup depends on the initial enrichment of the fuel, and on the potential for exposure to control components during in-core operation (see Table 4.7.3 and Figure 4.5.1) Note that to address the exposure to control components two different fuel configurations are used, both with fuel in every basket location, and termed Configuration 1A and Configuration 1B. Therefore, throughout this document, the term Configuration 1 refers generically to the condition of the basket with fuel in every location, whereas terms Configuration 1A or 1B, or Configuration A or B, refer to the fuel configurations for the different control component exposure.

- Configuration 2 is analyzed to accommodate fresh fuel in the peripheral eight fuel basket locations (see Figure 4.5.2). The central four locations remain empty.

Each configuration is analyzed to demonstrate that k_{eff} is less than or equal to 0.95 with the storage fuel basket loaded with fuel of the highest anticipated reactivity and the STC flooded with water at a temperature corresponding to the highest reactivity. The maximum calculated reactivity includes a margin for uncertainty in reactivity calculations, is performed for a combination of worst case tolerances and conditions, and is shown to be less than 0.95 with a 95% probability at a 95% confidence level. Under normal conditions, the water in the canister is assumed to be pure, unborated water, while under accident conditions, the soluble boron in the water is credited. A summary of the types of accidents analyzed and the soluble boron required to ensure that the maximum k_{eff} remains below 0.95 are shown in Table 4.7.4. These acceptance criteria are in accordance with 10CFR50.68(b).

Additionally, this chapter evaluates the acceptability of storing fuel from Indian Point Unit 3 in the spent fuel pool of Indian Point Unit 2 (see Section 4.8).

4.2 General Methodology

4.2.1 Introduction

Before the detailed methodology is presented, this introductory section gives an overview of the criticality methodologies, regulatory bases, applicable acceptance criteria, and embedded margins and conservatisms.

Governing Regulation, B-10 Areal Density, Initial Methodology

The STC is a device that is to be licensed under 10CFR50, and its criticality safety performance and acceptance criteria are therefore governed by 10CFR50.68. The design of the STC basket is based on the specifications of the basket of the MPC-32 dry storage and transportation canister. The STC basket consists essentially of the 12 inner cells of an MPC-32 basket. From a criticality perspective, the STC has a larger neutron absorption capability than almost all other wet storage structures (racks) licensed under 10CFR50.68. Specifically, the B-10 areal density and steel wall thicknesses are substantially larger than those in the IP Unit 3 and Unit 2 Region 2 spent fuel racks (See also Section 2.2.1 and Table 2.2.1 or this report). Based on this fact alone, all fuel qualified for the Region 2 racks in the IP Unit 3 and Unit 2 pool would automatically qualify for loading into the STC. Specifically,

- The B-10 areal density of the neutron absorbers in the STC basket is 0.0310 g/cm^2 (minimum), which is higher than that of typical wet storage racks in the US. The IP2 and IP3 racks have neutron absorbers with nominal B-10 areal densities of 0.026 and 0.020 g/cm^2, respectively.
- The thickness of the wall of the steel basket is about 0.28 inch, while typical wet storage racks have thicknesses of about 0.075 inch. The wall thickness in the IP2 and IP3 racks are 0.075 and 0.170 inches, respectively.

Based on this situation, the initial licensing report for the STC utilized a typical wet storage methodology to demonstrate criticality safety, with soluble boron credit for accident conditions but not for normal conditions, and applied essentially the same burnup requirements (loading curves) that existed for the IP2 and IP3 Region 2 racks to the STC.

Change to HI-STAR 100 Criticality Methodology, Retaining 10CFR50.68 Acceptance Criteria

When responding to the first round of RAIs in 2010 for criticality, an additional aspect was taken into consideration. Over the last two years, the general criticality analysis methodology for wet storage systems has been undergoing an extensive review and revision. As of this writing, this process is not finalized, and new durable NRC guidance is only expected in early 2013. In the interim, a draft ISG (DSS-ISG-2010-01) was issued by the NRC in September 2010; however that also was not available when the previous RAIs were received in April 2010. Therefore, in the absence of a durable guidance, a methodology different from and more conservative than the typical Part 50 wet storage criticality methodology was used. This methodology is based on the burnup credit methodology developed for the HI-STAR 100 Transport cask, which was reviewed and approved by the NRC under 10CFR71 (ML062860201, October 12, 2006). The HI-STAR criticality methodology introduced additional margin and conservatisms, mainly in the following areas:

- In addition to the traditional critical experiment benchmarks used in wet storage, the HI-STAR 100 methodology uses benchmarks based on chemical assays and commercial

reactor criticals. Application of those additional benchmarks limits the number of isotopes credited, applies highly conservative correction factors to minor actinides and fission products, and adds additional bias and bias uncertainties. While the Part 50 wet storage criticality methodology combines uncertainties statistically, including the depletion uncertainty, worst case combinations of tolerances are used in the HI-STAR 100 methodology.

- In the HI-STAR 100 methodology, assemblies with potential control rod insertion are conservatively analyzed as if control rods had been inserted to the fullest extent in those assemblies, although this condition is not permitted during full power operation. This approach maximizes the spectrum hardening in those assemblies and therefore increases reactivity.

It is important to note that using the Part 71 methodology vs. the Part 50 methodology is only a change in methodology, not the applicable regulations and acceptance criteria originally stated. The STC will still be licensed under 10CFR50, and the acceptance criteria from 10CFR50.68 still apply. This means that soluble boron credit is an option in limiting k-eff under normal conditions. 10CFR50.68 also permits credit for soluble boron to protect against the consequences of accidents, and this is applied in the analysis for the STC with respect to misloading conditions. A burnup measurement to protect against misloading, as suggested in ISG-8 Revision 2 as additional guidance to NUREG-1617 for applying burnup credit to transport packages licensed under10 CFR Part 71, is therefore not necessary for the STC. A more detailed comparison of the methodologies is presented below.

Application of the HI-STAR 100 Methodology to the STC

The STC with its 12 assembly basket is very similar to the HI-STAR with the MPC-32 in the aspects that are relevant from a criticality perspective (see Table 4.7.18). Regarding the various parameters where differences exist please note the following:

Fuel

While the fuel assemblies used for the STC and MPC calculations have a different number of fuel rods, they are from the same nuclear fuel supply vendor and have a similar layout in terms of guide tube locations.

Fuel Basket

While the number of fuel assemblies is different between the STC (12 assemblies) and the MPC-32 (32 assemblies), the design and the dimensions of the individual basket cells including the neutron absorber specification are identical.

Overpack

Studies have been performed in the past [K.C] that show that the overpack has a negligible effect on the reactivity of the system. The difference in the overpack design between the STC and the HI-STAR is therefore inconsequential.

Based on this strong similarity, results of qualitative evaluations and of evaluations that are not directly performed with the actual design should be equally applicable to both designs. Important qualitative evaluations include those that determine the bounding moderation conditions. Important evaluations that are not directly performed with the actual design include the benchmarking calculations. Such calculations are therefore taken from the HI-STAR application and methodology [K.C], with only limited studies or additions to demonstrate that they are applicable to the STC.

Most aspects of the burnup credit methodology for the STC are identical to those previously developed for the HI-STAR 100. However, there are some differences, either to account for site-specific conditions or in consideration of the different acceptance criteria (Part 71 vs. Part 50). This section provides a brief description of those differences, and provides or references the relevant discussions and justifications in each case.

The differences are presented in the following tables, which briefly describe the aspects, any changes made in the context of the current Licensing Report, together with any discussion, justification, and references. The first table lists those aspects that were initially different, and how the STC approach is now aligned with the HI-STAR 100 approach. The second table presents those aspects where a difference remains.

Table 4.0.1

Resolved Methodology Differences HI-STAR 100 vs. STC

HI-STAR 100	**STC, INITIAL METHODOLOGY FOLLOWING HI-STAR**	**STC, CURRENT METHODOLOGY**	**DISCUSSION / JUSTIFICATION**
BURNABLE POISON RODS ASSUMED OVER ENTIRE ACTIVE LENGTH	BURNABLE POISON RODS OVER PART OF ACTIVE LENGTH BASED ON ACTUAL BURNABLE POISON DESIGN USED AT IP	NOW SAME AS HI-STAR 100 – BURNABLE POISON RODS ASSUMED OVER ENTIRE ACTIVE LENGTH	CURRENT APPROACH IS MORE CONSERVATIVE.
BURNUP CREDIT	BURNUP CREDIT *EXCEEDS* 50	NOW SAME AS HI-STAR 100 -	CURRENT APPROACH IS

LIMITED TO 50 GWD/MTU	GWD/MTU	BURNUP CREDIT *LIMITED* TO 50 GWD/MTU	MORE CONSERVATIVE. NOTE THAT THIS IS A LIMIT OF THE CREDITED BURNUP, NOT A LIMIT OF THE ACTUAL BURNUP OF AN ASSEMBLY.

Table 4.0.2

Retained and New Methodology Differences HI-STAR 100 vs. STC

HI-STAR 100	**STC, INITIAL METHODOLOGY FOLLOWING HI-STAR**	**STC, CURRENT METHODOLOGY**	**DISCUSSION / JUSTIFICATION**
UPPER BOUND SPECIFIC POWER USED IN DEPLETION ANALYSES	SAME AS HI-STAR 100	CONSERVATIVELY LOW SPECIFIC POWER USED IN DEPLETION CALCULATIONS	CURRENT APPROACH IS MORE CONSERVATIVE.
RADIAL BURNUP PROFILES EVALUATED, BUT NOT CONSIDERED IN DESIGN BASIS CALCULATIONS	SAME AS HI-STAR 100	RADIAL BURNUP PROFILES NOW CONSIDERED IN DESIGN BASIS CALCULATIONS	CURRENT APPROACH IS MORE CONSERVATIVE.
NO OPTIONAL LOADING PATTERN FOR FRESH FUEL OR FUEL THAT DOES NOT MEET THE LOADING	OPTIONAL PARTIAL LOADING PATTERN FOR FUEL THAT DOES NOT MEET THE LOADING CURVES.	UNCHANGED	NEEDED FOR FUEL THAT DOES NOT MEET THE MINIMUM REQUIRED BURNUP. NOTE THAT FRESH FUEL IS IN FACT NOT PERMITTED IN THE POOL DURING STC

CURVES.			LOADING.
NORMAL CONDITIONS ANALYZED WITH PURE (UNBORATED) WATER FLOODING.	NORMAL CONDITIONS ANALYZED WITH PURE (UNBORATED) WATER FLOODING,	UNCHANGED	NOTE THAT 10CFR50 REGULATIONS ALLOWS SOME SOLUBLE BORON CREDIT UNDER NORMAL CONDITIONS.
BURNUP MEASUREMEN T TO PROTECT AGAINST MISLOADING	SOLUBLE BORON CREDIT TO PROTECT AGAINST CONSEQUENCES OF MISLOADING ACCIDENTS.	UNCHANGED	STANDARD APPROACH FOR 10CFR50 BASED ON DOUBLE CONTINGENCY PRINCIPLE. SOLUBLE BORON PROVIDES LARGE SUBCRITICALITY MARGIN EVEN UNDER MISLOADING CONDITIONS.
CRITICALITY BENCHMARKS BASED ON FRESH FUEL AND MOX CRITICAL EXPERIMENTS	CRITICALITY BENCHMARKS BASED ON FRESH FUEL, MOX FUEL AND SIMULATED SPENT FUEL (HTC) CRITICAL EXPERIMENT	UNCHANGED	INCREASED CONFIDENCE IN CRITICALITY CALCULATIONS
NO ADDITIONAL CONSIDERATI ONS FOR NEUTRON ABSORBER SURVEILLANC E PROGRAM	ADDITIONAL 5% B-10 PENALTY FOR SURVEILLANCE PROGRAM	UNCHANGED	IN CONSIDERATION OF THE MULTIPLE LOADING/UNLOADING CYCLES OF THE STC
FOR ASSEMBLIES WITH POTENTIAL CONTROL ROD	AS A BOUNDING APPROACH, ONLY INSERTION DURING THE ENTIRE	UNCHANGED	BOUNDING APPROACH TO SIMPLIFY ANALYSES.

HOLTEC INTERNATIONAL COPYRIGHTED MATERIAL

INSERTION, SEVERAL DURATIONS OF THIS INSERTIONS ARE CONSIDERED	IRRADIATION PERIOD IS CONSIDERED		

In summary, for the differences presented in Table 4.0.2, the approach taken for the STC provides the same or larger conservatism than that of the HI-STAR 100.

Recent Part 50 Wet Storage Criticality Approval

It is also considered beneficial here to highlight recent developments in the wet storage criticality safety analysis area: While there is no durable guidance yet, there are clear indications that successful and acceptable paths forward for criticality safety evaluations for wet storage systems are now available. Just recently, NRC approved the analysis for re-racking of the Beaver Valley Unit 2 Spent fuel pool, after a two year licensing process that involved extensive interaction with the NRC technical staff, including a week-long technical audit, and review of analyses by Oak Ridge National Laboratory experts (For the Beaver Valley SER see ML110890844). Beaver Valley is a Westinghouse plant with a similar fuel type and similar reactor conditions as Indian Point. It is noted that the burnup acceptance criteria developed and approved for Beaver Valley is much less restrictive than developed for the STC basket using the HI-STAR 100 methodology. The STC will therefore provide a higher criticality margin than the recently approved Beaver Valley racks.

Comparison of minimum required burnups

To indicate the additional level of conservatism in the HI-STAR 100 methodology, the table below lists the minimum required burnup for the fuel to be placed in the STC , in comparison with the minimum required burnup for fuel to be placed in the Indian Unit 2 and Unit 3 pools, and for the Beaver Valley Unit 2 pool. For this comparison, all fuel is 4.0% enriched. As discussed above, the Beaver Valley information is from a wet storage criticality license amendment request approved very recently and is for fuel that is similar to the Indian Point fuel.

Table 4.0.3 – Comparison of Minimum Required Burnup

CALCULATION	MINIMUM REQUIRED BURNUP FOR FUEL OF 4 WT%- U-235 ENRICHMENT [GWD/MTU]
INDIAN POINT 3 FUEL IN STC	

WET STORAGE METHODOLOGY (INITIAL SUBMITTAL)	28.26
HI-STAR 100 METHODOLOGY, FUEL NOT EXPOSED TO CONTROL RODS	35.1†
HI-STAR 100 METHODOLOGY, FUEL POTENTIALLY EXPOSED TO CONTROL RODS	42.5†
SPENT FUEL POOLS	
INDIAN POINT UNIT 2	28.80
INDIAN POINT UNIT 3	29.75
BEAVER VALLEY UNIT 2 (ML110890844, TABLE 3.7.14-1E, REGION 3)	28.84

† Without 5% Burnup Uncertainty

The minimum required burnup for the STC using the HI-STAR methodology is higher than even the requirements for the recently approved Beaver Valley pool. Again, this additional conservatism to use the Part 71 HI-STAR 100 methodology was added intentionally to decouple the STC criticality analyses from the currently developing wet storage methodology.

Margin Analysis

The HI-STAR 100 methodology is based on ISG 8, Rev 2. This ISG suggests performing a margin analysis to allow for an evaluation of any remaining uncertainties (or modeling deficiencies) that are not explicitly considered in the design basis cases and compare against this margin. This margin analysis was performed for the HI-STAR 100, and also for the STC. For the STC, it indicates a potential margin on the order of 0.07 delta-k. There are essentially no uncertainties not explicitly considered in the analysis. The entire margin is therefore available to cover any unspecified uncertainties.

Indian Point Unit 3 Pool Inventory

The minimum required burnups are also viewed in the context of the actual inventory in the Indian Point Unit 3 pool that needs to be moved into the Unit 2 pool. The current requirements, with the substantial increase in minimum required burnups due to adopting the HI-STAR 100 methodology (see Table 4.0.3), are fairly limiting in terms of the 12 assembly loading configuration. Any further increase in the minimum required burnups would move a larger

number of assemblies into an 8 assembly loading configuration, thereby increasing the number of transfers impacting both operations and ALARA considerations.

Soluble Boron Credit

There is one difference between the actual condition of the STC and the condition that is assumed for the HI-STAR 100 for the criticality analyses: The STC is filled with borated water with a minimum soluble boron concentration of 2000 ppm, as specified in the proposed Technical Specifications, whereas the HI-STAR 100 was analyzed with fresh water, as required by the regulations applicable to the HI-STAR 100 (Part 71).

This soluble boron concentration is equivalent to an additional reactivity margin of about 0.20 delta-k. The assumption of unborated water in the STC results in an additional and substantial margin to any limit, i.e. a k-eff of 0.9 in unborated water would be a k-eff of about 0.7 with this concentration of soluble boron.

The soluble boron level of the STC is controlled operationally through a proposed LCO in the TS, and since the system is designed and tested to be leak tight, there is no credible mechanism to reduce this soluble boron level during transfer operations.

Note that soluble boron, about 1000 ppm, is credited for various potential misloading conditions, as permitted by the regulation that governs the operation of the STC, 10CFR50.68. This regulation also permits credit for soluble boron under normal conditions, as long as the maximum k-eff remains below 1.0 for flooding with unborated water. This option is currently not applied to the STC, and unborated water was used for the calculation to show that the maximum k-eff is below 0.95.

Summary

The STC is a 10CFR50 component, with criticality safety requirements meeting the acceptance criteria in 10CFR50.68. However, the design of the STC basket is based on a dry storage and transportation design (MPC-32), which has a much higher neutron absorption than typical wet storage systems. Also, the burnup credit methodology from a transport package design was used, which is much more conservative (i.e. has higher minimum required burnup values) than typical wet storage criticality methodologies. Additionally, the STC basket is flooded with borated water (2000 ppm) although it is not credited for normal conditions, and during transfer operations there is no credible event which would cause a loss of boron. Together, this combination results in a substantial subcriticality margin for the fuel-loaded STC in its most reactive configuration.

This document attempts to provide complete information in a stand-alone fashion but also to avoid excessive duplication of information already presented in other documents. Therefore, in some cases, only a reference to the HI-STAR 100 calcs is provided, together with a small study to verify the applicability of the HI-STAR 100 calculations. In other cases (PROPRIETARY TEXT REMOVED) parts of the HI-STAR SAR [K.C] are reproduced here.

The parameters of the STC, basket and fuel relevant from a criticality perspective are summarized in Table 4.2.1.

4.2.2 Details of Methodology

The principal method for the criticality analysis of the high-density fuel basket is the use of the three-dimensional Monte Carlo code MCNP4a [V.B]. MCNP4a is a continuous energy three-dimensional Monte Carlo code developed at the Los Alamos National Laboratory. MCNP4a was selected because it has been used previously and verified for criticality analyses and has all of the necessary features for this analysis. MCNP4a calculations used continuous energy cross-section data predominantly based on ENDF/B-V and ENDF/B-VI.

The convergence of a Monte Carlo criticality problem is sensitive to the following parameters: (1) number of histories per cycle, (2) the number of cycles skipped before averaging, (3) the total number of cycles and (4) the initial source distribution. The MCNP4a criticality output contains a great deal of useful information that may be used to determine the acceptability of the problem convergence. This information has been previously used in parametric studies to develop appropriate values for the aforementioned criticality parameters to be used in fuel basket criticality calculations. Based on these studies, at least 10,000 histories were simulated per cycle, 80 cycles were skipped before averaging, at least 200 cycles were accumulated, and the initial source was specified as uniform over the fueled regions (assemblies). For the STC, additional studies were performed that not only tracked the convergence of the k_{eff} value, but also the convergence of fission source distribution, through calculation of the Shannon Entropy. These studies indicate that for fission source convergence, 640 to 800 cycles are necessary. All design basis calculations are therefore performed with 640 to 800 cycles, while the various studies typically use only 200 cycles.

Fuel depletion analyses during core operation were performed with CASMO-4, a two-dimensional multigroup transport theory code based on the Method of Characteristics [V.D]. PROPRIETARY TEXT REMOVED. CASMO-4 is primarily used to determine the isotopic composition of the spent fuel. In addition, the CASMO-4 calculations are restarted in the fuel basket geometry, yielding the two-dimensional infinite multiplication factor (k_{inf}) for the fuel basket to determine the trend of the reactivity effect of the moderator temperature variation. Note that CASMO is not used to determine any quantitative reactivity effects.

Before comparing the MCNP calculated k_{eff} to the criticality limit (0.95) a bias and bias uncertainty is added. For configuration 1 which credits burnup, this bias and bias uncertainty comes from three benchmarks, PROPRIETARY TEXT REMOVED.

For configuration 2, which only contains fresh fuel, only a bias and bias uncertainty from the critical experiments is applied. PROPRIETARY TEXT REMOVED.

The maximum k_{eff} is determined from the MCNP4a calculated k_{eff}, the MCNP calculational bias, the bias and bias uncertainty from three different sets of benchmark calculations using the following formula:

$$\text{Max } k_{eff} = \text{Calculated } k_{eff} + \text{Calculational Uncertainty} + \sum_i \text{Bias} + [\sum_i (\text{Bias Uncertainty})^2]^{1/2}$$

Note that since calculations are performed for bounding conditions, no other uncertainties apply.

Table 4.2.1

Parameters of the STC, Basket and Fuel relevant from a Criticality Perspective

Parameter	**STC, Basket or Fuel Characteristics**
Fuel and Fuel Type	UO_2, PWR
Fissionable Material	^{235}U
Enrichment	2.0 to 5.0 wt%
Burnup	0 to 60 GWd/MTU
Fuel Density	10.6 g/cm^3
Moderator	H_2O
Credited Soluble Boron in Moderator	0 to 1000 ppm
Interstitial Material	S.Steel (Basket)
Absorber	Al – B_4C (Metamic)
Reflector	H_2O, Steel, Lead
Fuel Cladding	Zirconium Alloy
In-Core Reactivity and Flux Control	Soluble Boron, IFBA, WABA, BPRA, RCCA, Hafnium

Table 4.2.2

List of Isotopes Considered in the Design Basis Analyses

PROPRIETARY TABLE REMOVED

4.3 Acceptance Criteria

The objective of this evaluation is to show that the effective neutron multiplication factor, k_{eff}, is less than 0.95 with the fuel basket loaded with fuel of the highest anticipated reactivity and the STC flooded with unborated (normal conditions) or borated (accident conditions) water at a temperature corresponding to the highest reactivity. The maximum calculated reactivity includes a margin for uncertainty in reactivity calculations including manufacturing tolerances and is shown to be less than 0.95 with a 95% probability at a 95% confidence level [V.A]. Reactivity effects of abnormal and accident conditions have also been evaluated to assure that under all credible abnormal and accident conditions, the reactivity will not exceed the regulatory limit of 0.95 under borated conditions. These acceptance criteria are in accordance with 10CFR50.68(b).

Applicable codes, standards, regulations and guidances or pertinent sections thereof, include the following:

- Code of Federal Regulations, Title 10, Part 50, Section 68, "Criticality Accident Requirements."
- Code of Federal Regulations, Title 10, Part 50, Appendix A, General Design Criterion 62, "Prevention of Criticality in Fuel Storage and Handling."
- USNRC Standard Review Plan, NUREG-0800, Section 9.1.1, Criticality Safety of Fresh and Spent Fuel Storage and Handling, Rev. 3 – March 2007.
- NUREG-1617, "Standard Review Plan for Transportation Packages for Spent Nuclear Fuel" USNRC, Washington D.C., March 2000.
- USNRC Interim Staff Guidance 8 (ISG-8), Revision 2, "Burnup Credit in the Criticality Safety Analyses of PWR Spent Fuel in Transport and Storage Casks".
- USNRC Regulatory Guide 1.13, Spent Fuel Storage Facility Design Basis, Rev. 2, March 2007.
- ANSI ANS-8.17-1984, Criticality Safety Criteria for the Handling, Storage and Transportation of LWR Fuel Outside Reactors.

4.4 Assumptions

The criticality analyses use a range of assumptions, in order to simplify the calculations and/or to provide additional conservatism. In summary, those assumptions assure that the true reactivity will always be less than the calculated reactivity. The following is a list of the major assumptions that were employed:

1. Moderator is water at a temperature that results in the highest reactivity, as determined by the analysis (see Section 4.7.6).

2. Neutron absorption in minor structural members is neglected; spacer grids are replaced by water because they have a negligible effect on reactivity, even for the small amount of soluble boron credited (see Section 4.7.9.3).

3. Fuel to Clad Gap and the inside of annular pellets (if present) are assumed flooded with pure water.

4. The fuel basket neutron absorber is 149 inches long, which is longer than the active region of the fuel of 144 inches. However, the absorber is conservatively modeled to be the same length as the active region of the fuel.

5. Credit is taken for only PROPRIETARY TEXT REMOVED of the minimum amount of ^{10}B in the neutron poison:
    a. A reduction of 10% is taken consistent with the approach in [K.C].
    b. A further reduction of PROPRIETARY TEXT REMOVED is applied to account for a measurement uncertainty of the surveillance program for the neutron absorber

6. Bounding core operating parameters are used for all fuel assemblies (see Section 4.7.1.2.1).

7. A cooling time of 5 years is used, except for the evaluation of the effect of burnable inserts that were only present in assemblies discharged more than 10 years ago, in which case a cooling time of 10 years is used. The cooling time of 5 years is conservative since:
    a. For higher burnup fuel, the thermal limit precludes a cooling time of 5 years for all assemblies in the basket; and
    b. Lower burned fuel in the IP-3 pool that would meet the thermal limit is from earlier operation of the plant and has cooling times larger than 5 years.

    The cooling time of 10 years for those assemblies with exposure to certain burnable inserts is also conservative since those assemblies have a cooling time of more than 10 years.

8. Assemblies are assumed to have the bounding axial burnup profile or an axially constant burnup, whichever results in a higher reactivity.

9. A bounding nominal fuel pellet density (96.5 % + 1.0 % uncertainty = 97.5% of theoretical) is conservatively considered in the analysis over the entire fuel rod length, i.e. fuel pellet dishing, chamfering or pellets with an annulus are conservatively modeled as solid fuel pellet cylinders with that density.

10. In the depletion calculations with burnable absorbers and control components, a number of conservative assumptions were made:

- Assemblies that could potentially have been exposed to the effect of control rod insertion during in-core operation are depleted with full control rod insertion during their entire irradiation period.
- Other assemblies are depleted with a full insertion of burnable absorber during their entire irradiation period.

11. Reactivity control devices (CRs, WABAs, BPRAs, etc) that may be present in the fuel are not credited in the criticality calculations for the STC.

12. All assemblies are assumed to be either centered in the basket cells, or all are assumed to be moved closest towards the center of the basket, whichever condition results in the higher k_{eff} value (see Section 4.7.4)

13. Under normal conditions, the STC is assumed to be flooded with pure, unborated water, while in actuality the STC will be flooded with borated water, with a minimum soluble boron level of 2000 ppm.

4.5 Input Data

4.5.1 Design Basis Fuel Assembly Specification

The STC fuel basket is designed to accommodate Westinghouse designed 15x15 fuel assemblies (LOPAR, OFA, Vantage, Upgraded) used at Indian Point Unit 3. The design specifications for these fuel assemblies are listed in Table 4.5.1. Specifications of the various inserts during core operation are summarized in Table 4.5.4 through Table 4.5.6.

4.5.2 Core Operating Parameters

Core operating parameters are necessary for fuel depletion calculations performed with CASMO-4. The core parameters used for the depletion calculations are presented in Table 4.5.2, and are based on site-specific information for IP-3. For details on how those values were determined see Section 4.7.1.2.1.

4.5.3 Axial Enrichment and Burnup Distributions

As at many other plants, Indian Point 3 has initially used fuel with an axially constant enrichment, followed by using fuel with natural uranium axial blankets, and finally using fuel with enriched axial blankets. Fuel with different axial enrichment profiles also show different burnup profiles, with lower relative burnups in the blanket sections. Previous comparisons of fuel with different enrichment profiles have consistently shown that given the same assembly average burnup, blanketed fuel (both natural and enriched blankets) is bounded by (i.e. less

reactive than) fuel with constant enrichment over the entire active height. This is due to the reduced U-235 amount in the blanket areas that only have a low burnup. Other criticality analyses have credited this fact by developing different loading curves for different enrichment profiles, with lower burnup requirements for blanketed fuel. For IP3 fuel, no such approach is used, and the burnup requirements are based on the most reactive enrichment profile.

Burnup profiles used in the Analyses

IP3 uses Westinghouse 15x15 fuel (initially as unblanketed fuel, later with natural and then enriched blankets). However, only a limited number of plant specific or publically available axial burnup profiles are available for this fuel. Therefore, to qualify all currently discharged fuel, and provide a basis for qualifying fuel discharged in the future, the analyses also use profiles for the similar and more common Westinghouse 17x17 assembly, and from NUREG/CR-6801, in addition to those plant specific and publically available profiles. These distributions are discussed below, with a specific focus on applicability and inherent conservatisms.

1. In [K.C] and [L.K], a methodology is developed that determines conservative, generic axial burnup profiles from a dataset of actual profiles. PROPRIETARY TEXT REMOVED. The dataset contains the YAEC database [V.Q] that contains over 3000 axial profiles, and additional [V.N],[V.O],[V.M] profiles PROPRIETARY TEXT REMOVED In [K.C], this methodology is used for Westinghouse 17x17 and B&W 15x15 assemblies without axial blankets, from a dataset of [V.N] and [V.O],[V.M] profiles, respectively. The Westinghouse 17x17 profiles are used here for assemblies without any axial blankets. Since assemblies without axial blankets were only used in earlier cycles, they have a much longer cooling time than the 5 years assumed in the design basis criticality analysis, which provides additional but unspecified margin. Those profiles are shown in Table 4.5.3. For each axial section, the relative burnup is specified as a linear function of burnup, by listing the value for 5 GWd/MTU and 45 GWd/MTU. Above 45 GWd/MTU the relative burnup is considered constant.
2. The profile database that was used to develop the Westinghouse 17x17 profiles for the HI-STAR 100 only contained 4 profiles for Westinghouse 15x15 assemblies, which is the design used at IP3. All four profiles were used, to confirm that results for those 15x15 profiles are equivalent to or bounded by results obtained for the 17x17 profiles. Those four profiles are also shown in Table 4.5.3.
3. Profiles from NUREG/CR-6801 are used, to provide further confirmation that the profiles from the HI-STAR 100 methodology are appropriate.
4. An axially constant burnup and enrichment distribution. While this distribution does not represent any realistic condition, it is traditionally used for added conservatism since it typically result in higher k-eff values at lower enrichments and burnups than the actual profiles.
5. In addition to profiles without any axial blankets, the YAEC database also contains a small set of profiles for fuel with natural blankets. Among those are 56 for W17x17

assemblies, and 92 for W15x15 assemblies. An analysis of those profiles by assembly type showed little difference, so those profiles were combined and a common profile was determined that is also presented in Table 4.5.3.

6. Profiles from IP3 for 290 recently discharged fuel assemblies (Cycles 14 through 16) with enriched blankets. The bounding profile, i.e. a profile that bounds any of those individual assembly profiles in each axial section, is also shown in Table 4.5.3.

4.5.4 Fuel Basket and STC Specifications

The fuel basket consists of a rectilinear arrangement of stainless steel plates, forming a total of 12 cells to house the fuel assemblies. A Metamic neutron absorber panel is attached to each basket cell wall, including those on the periphery of the basket, with a stainless steel sheathing plate. The basket is surrounded by the STC, essentially a cylindrical canister with a steel-lead-steel wall. Note that the HI-TRAC that surrounds the STC during part of the transfer operation is not explicitly modeled (see discussion in Section 7). The parameters relevant to criticality safety that are used in the analyses presented here are summarized in Table 4.5.8.

Table 4.5.1
Fuel Assembly Specification

Assembly type	1	2	3
Description	15x15 Vantage 5, Vantage +, Vantage P+/V+, Upgraded Fuel	15x15 LOPAR	15x15 LOPAR
Fuel Rod Data			
Fuel pellet outside diameter, in.	0.3659		0.3649
Cladding inside diameter, in.	0.3734		
Cladding outside diameter, in.	0.422		
Cladding material	Zr		
Stack density, g/cc	96.5% TD		
Fuel Assembly Data			
Fuel rod array	15x15		
Number of fuel rods	204		
Fuel rod pitch, in.	0.563		
Max. ZrB_2 Coating Loading (g ^{10}B/cm)	0.001043 (116 rods) or 0.000871 (148 rods)	None	
Max. ZrB_2 Coating Length, in.†	128	None	
Number of Instrument/Guide Tubes	21		
Guide Tube Material	Zr		
Guide Tube inside diameter, in.	0.498 and 0.499	0.512	
Guide Tube outside diameter, in.	0.532 and 0.533	0.546	
Active fuel Length, in.	144		
Axial Blankets	Yes	No	

† Not used in the analyses.

HOLTEC INTERNATIONAL COPYRIGHTED MATERIAL

Table 4.5.2
IP-3 Core Operating Parameters

Parameter	Value	Reference or Basis
Soluble Boron Concentration (cycle average), ppm	900	Upperbound value for cycle-average concentration
Assembly Specific Power, MW/MTU	22.14	Based on [L.K], PROPRIETARY TEXT REMOVED
Core Average Fuel Temperature, K	1219	[L.K], PROPRIETARY TEXT REMOVED
Core Average Moderator Temperature at the Top of the Active Region, °F	637.3	Conservative upper-bound value based on Hot Channel Temperature
In-Core Assembly Pitch, Inches	8.466	Actual value

Table 4.5.3
Axial Burnup Distribution [L.K, K.C]

Axial Section (all equal height; 1 = bottom)	Burnup (GWd/mtU)	Relative Burnup	Burnup (GWd/mtU)	Relative Burnup
Westinghouse 17x17 (non-blanketed fuel)				
1	5	0.448308	45	0.573544
2	5	0.753403	45	0.917418
3	5	0.928594	45	1.03322
4	5	1.021988	45	1.04117
5	5	1.078291	45	1.06094
6	5	1.038897	45	1.04527
7	5	1.058114	45	1.06559
8	5	1.052951	45	1.06464
9	5	1.022108	45	1.04649
10	5	1.050228	45	1.06349
11	5	1.025183	45	1.04969
12	5	1.033399	45	1.05939
13	5	1.024539	45	1.05493
14	5	1.006084	45	1.03196
15	5	0.990357	45	1.0318
16	5	0.855023	45	0.986169
17	5	0.488461	45	0.831825
18	5	0.115618	45	0.512147

Table 4.5.3 (continued)
Axial Burnup Distribution [L.K, K.C]

Axial Section (all equal height; 1 = bottom)	Burnup (GWd/mtU)	Relative Burnup	Burnup (GWd/mtU)	Relative Burnup
Westinghouse 17x17 and 15x15 (fuel with natural blankets)				
1	5	0.182472	45	0.317479
2	5	0.729025	45	0.904748
3	5	0.892679	45	1.04096
4	5	0.969707	45	1.08549
5	5	1.042677	45	1.10953
6	5	1.139914	45	1.11547
7	5	1.128019	45	1.10201
8	5	1.11279	45	1.11279
9	5	1.09172	45	1.12156
10	5	1.086998	45	1.11698
11	5	1.087274	45	1.11251
12	5	1.093002	45	1.10782
13	5	1.088091	45	1.10218
14	5	1.067056	45	1.0915
15	5	1.019048	45	1.06439
16	5	0.908604	45	0.983328
17	5	0.687812	45	0.799936
18	5	0.192614	45	0.264554

HOLTEC INTERNATIONAL COPYRIGHTED MATERIAL

Table 4.5.3 (continued)
Axial Burnup Distribution

Axial Section (1 = bottom)	Axial Section Length, inches	Relative Burnup
Westinghouse 15x15 (IP3 fuel with enriched blankets)		
1	6	0.43098
2	2	0.61244
3	1	0.80806
4	3	0.84344
5	6	0.96411
6	6	1.05436
7	6	1.08727
8	6	1.09929
9	6	1.10004
10	6	1.09994
11	6	1.09175
12	6	1.09023
13	6	1.08766
14	6	1.08667
15	6	1.08424
16	6	1.07943
17	6	1.08015
18	6	1.07736
19	6	1.07645
20	6	1.06740
21	6	1.05802
22	6	1.03332
23	6	0.98447
24	6	0.88621
25	3	0.76569
26	1	0.75175
27	2	0.58255
28	6	0.45324

Table 4.5.3 (continued)
Axial Burnup Distribution

Axial Section (all equal height; 1 = bottom)	Assembly 1 Relative Burnup	Assembly 2 Relative Burnup	Assembly 3 Relative Burnup	Assembly 4 Relative Burnup
Westinghouse 15x15 (non-blanketed fuel)				
1	0.68096	0.54222	0.51996	0.58535
2	0.90478	0.90735	0.88754	0.95727
3	1.04056	1.0496	1.03592	1.09056
4	1.0792	1.09126	1.08042	1.12051
5	1.08479	1.10933	1.10159	1.12564
6	1.08873	1.10948	1.1073	1.11134
7	1.07674	1.10282	1.10559	1.09414
8	1.08063	1.10702	1.11183	1.09319
9	1.0854	1.10608	1.11206	1.09235
10	1.07334	1.10103	1.10812	1.09086
11	1.07879	1.0977	1.10577	1.09188
12	1.08502	1.10069	1.10952	1.0989
13	1.07662	1.09411	1.10417	1.09587
14	1.07666	1.08296	1.09413	1.08734
15	1.07668	1.06314	1.07458	1.07272
16	1.01048	0.99668	1.00659	1.00253
17	0.8373	0.83765	0.83998	0.79646
18	0.56327	0.50086	0.49495	0.39308

Table 4.5.4
Burnable Poison Rods Assembly

Parameter	Value (Cycle 1-4)	Value (Cycle 8-10)
Max Number of BPRs per assembly	20	20
BP Inner Clad ID (in.)	0.2235	0.2230
BP Inner Clad OD (in.)	0.2365	0.2360
BP ID (in.)	0.2450	0.2440
BP OD (in.)	0.3920	0.3890
BP Outer Clad ID (in.)	0.4005	0.3935
BP Outer Clad OD (in.)	0.4390	0.4310
Cladding Material	Stainless Steel	Stainless Steel
Poison Material (Borosilicate Glass)	B_2O_3-SiO_2 (18.1 wt% B_2O_3) Cycle 1-2 B_2O_3-SiO_2 (12.5 wt% B_2O_3) Cycle 3-4	B_2O_3-SiO_2 (12.5 wt% B_2O_3)
Burnable Poison Density (g/cm^3)	2.23	2.23
Assembly Burnup when absorber is removed† (GWd/MTU)	30	19

† Not used in the analysis

Table 4.5.5
Wet Annular Burnable Absorbers (WABAs)

Parameter	Value
Max Number of rodlets per assembly	20
WABA Inner Clad ID (in.)	0.2210 (Cycle 5-6) 0.2250 (Cycle 7-15)
WABA Inner Clad OD (in.)	0.2670
Al_2O_3-B_4C ID (in.)	0.2780
Al_2O_3-B_4C OD (in.)	0.3180
WABA Outer Clad ID (in.)	0.3290
WABA Outer Clad OD (in.)	0.3810
Cladding Material	Zr
Poison Material	0.00603g ^{10}B/cm
Absorber Length (in.)[††]	120 to 134
Assembly Burnup when Absorber is removed[†] (GWd/MTU)	33.1

[††] Not used in the analysis
[†]

Table 4.5.6
Hafnium Flux Suppressor Rods

Parameter	Value
Max Number of rodlets per assembly	16
Hafnium Rod OD (in.)	0.3810
Poison Material	Hf
Absorber Length (in.)	143
Assembly Burnup while absorber is present† (GWd/MTU)	6.1

† Not used in the analysis

Table 4.5.7
Control Rods (CRs)

Parameter	Value
Max Number of rodlets per assembly	20
Ag-In-Cd Rod OD (in.)	0.3975
CR Clad OD (in.)	0.4390
CR Clad ID (in.)	0.4006
Poison Material	Ag-In-Cd (80%-15%-5%)
Poison Density (g/cc)	10.16
Clad Material	SS-304

Table 4.5.8
STC and Fuel Basket Specification

Parameter	Value
Cell ID, Inches	8.79 ± 0.06
Box Wall Thickness, Inches	9/32 ± 0.04
Cell Pitch, Inches	9.218 ± 0.06
PROPRIETARY TEXT REMOVED	PROPRIETARY TEXT REMOVED
PROPRIETARY TEXT REMOVED	PROPRIETARY TEXT REMOVED
PROPRIETARY TEXT REMOVED	PROPRIETARY TEXT REMOVED
Metamic Poison B_4C Weight Percent	31.5 min
STC ID, Inches	42
STC Wall Thickness (inside to outside), Inches	1 (Steel) 2.75 (Lead) 0.75 (Steel)

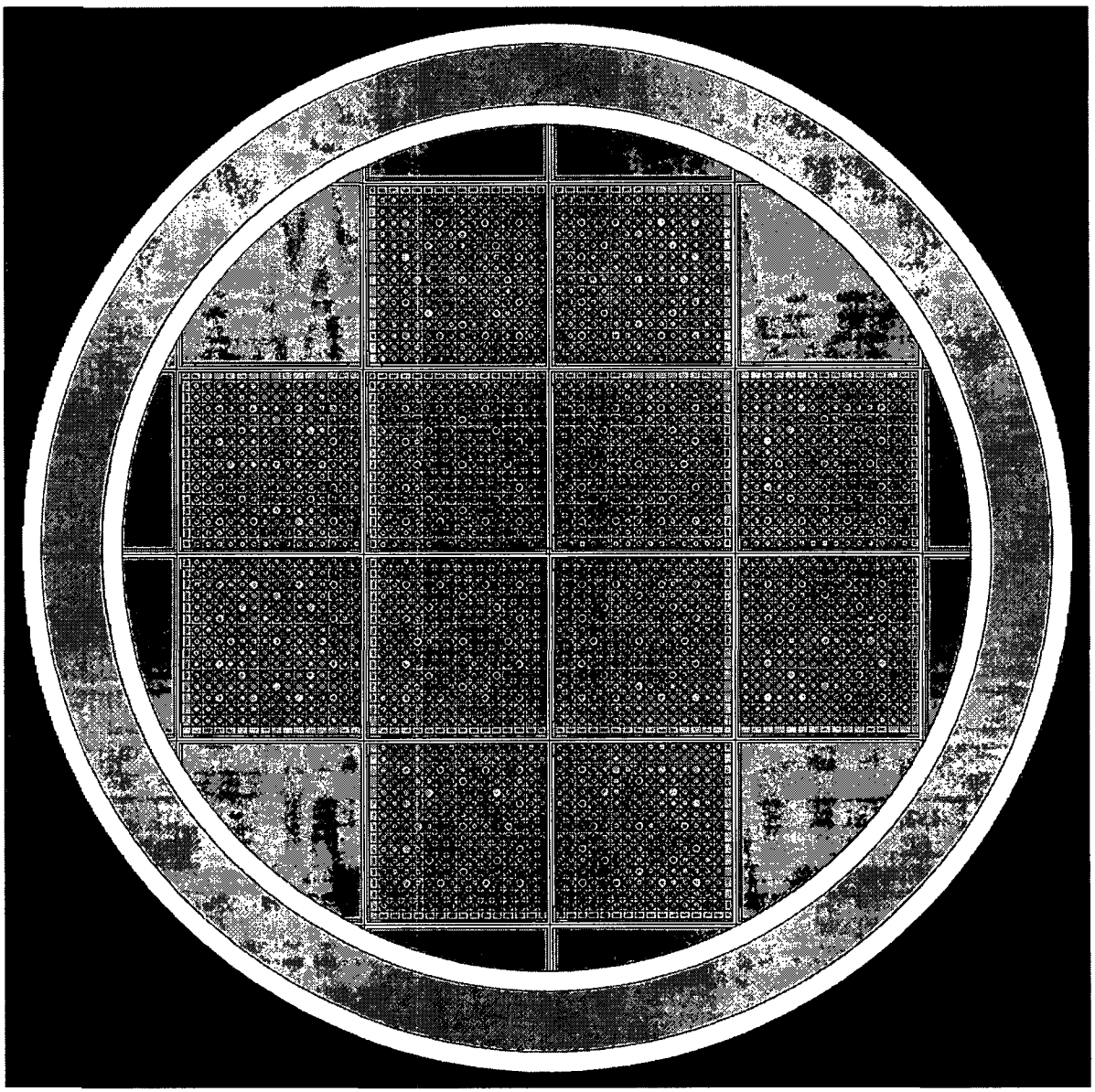

Figure 4.5.1: A Two-Dimensional Representation of the Actual Calculational Model Used for the Configuration 1 STC Analysis for Spent Fuel (To Scale).

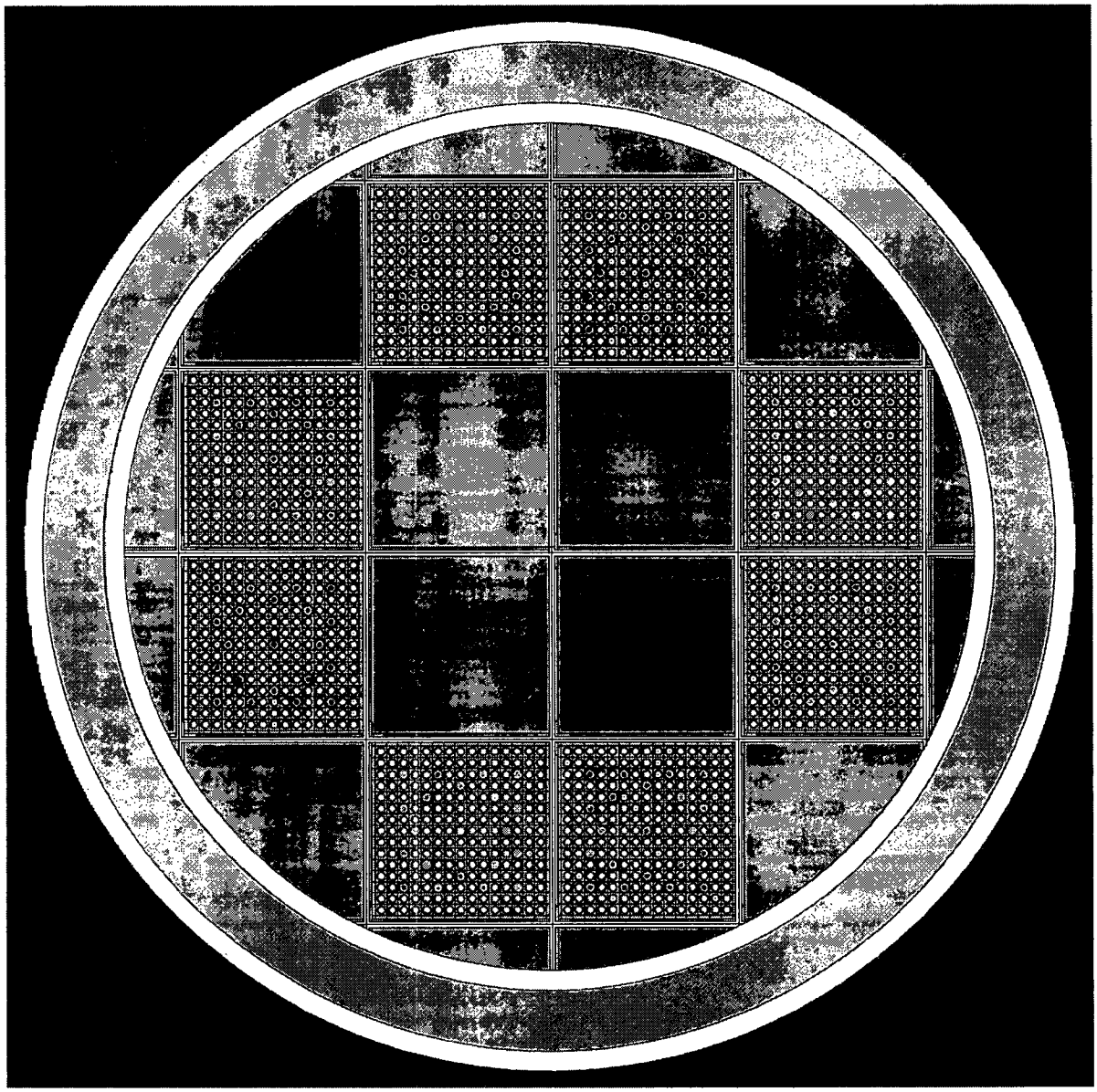

Figure 4.5.2: A Two-Dimensional Representation of the Actual Calculational Model Used for the Configuration 2 STC Analysis for Fresh Fuel (To Scale).

4.6 Computer Codes

The following computer codes were used during this analysis:

- MCNP4a [V.B] is a three-dimensional continuous energy Monte Carlo code developed at Los Alamos National Laboratory. This code offers the capability of performing full three-dimensional calculations for the loaded Fuel Basket. MCNP4a was run on the PCs at Holtec. Continuous energy cross-section data was based on ENDF/B-V and ENDF/B-VI.

- CASMO-4, Version 2.05.14 [V.D] is a two-dimensional multigroup transport theory code developed by Studsvik of Sweden. CASMO-4 is predominantly used for the depletion analysis, i.e. to determine the spent fuel composition. Additionally, CASMO-4 has the capability of analytically restarting burned fuel assemblies in the fuel basket configuration, which was used to confirm the temperature trend in the basket. The J-library [V.P] was used for all calculations.

4.7 Analysis and Results

Full three-dimensional calculational models were used in MCNP, explicitly modeling fuel rods and cladding, guide tubes, basket walls, and neutron absorber panels on the basket walls covered by sheathing. During the stages of the transfer operation, the STC can be in one of four configurations: 1) Inside Unit 3 pool; 2) Inside Unit 2 pool; 3) Elevated by a crane hanging in air; and 4) inside the water-filled HI-TRAC. To appropriately represent and bound those configurations, the STC shell around the basket is included in the model, surrounded by a water reflector of more than 12 inches on the side, top and bottom, but the HI-TRAC is not included. This is appropriate, since the 12 inches of water essentially represent full reflection on the outside of the STC, and any further reflection from the water of the Unit 2 or Unit 3 pool, or from the HI-TRAC body would be negligible. Further, it also bounds the condition of the STC in air, which would result in less reflection. Section 4.7.9.4 present studies that confirm this approach is appropriate. Figures 4.5.1 and 4.5.2 show cross sections of the models for Configuration 1 and 2, respectively. For the temperature study in CASMO, an infinite array of basket cells in a two-dimensional geometry is used.

Unless otherwise stated, all calculations assumed worst combination of dimensions for the fuel storage cells.

4.7.1 Fuel Assemblies, Fuel Inserts and Burnable Poisons

4.7.1.1 Bounding Assembly Type

There are three types of fuel assemblies with minor differences in dimensions. Several studies were performed to determine the bounding assembly. The studies model the different fuel types in the STC with MCNP, including the axial burnup distribution if applicable. These studies are performed for various enrichment and burnup combinations for Configuration 1, and for fresh fuel at the maximum enrichment for Configuration 2. The reactivity of the three assembly types has been evaluated and the results are listed in Table 4.7.5. The results for all assembly types are statistically identical, so either can be used as the bounding assembly type. Further note that the studies on burnable absorbers in Section 4.7.1.2.2 indicate a higher reactivity for fuel with IFBA, which was only used with assembly type 1. Assembly type 1 is therefore used as the bounding assembly in all subsequent calculations.

4.7.1.2 Depletion Calculations

4.7.1.2.1 Core Operating Parameters

The depletion calculations for the burnup credit application require the principal in-core operating parameters as input. The principal in-core parameters that affect the neutron multiplication factor (k_{eff}) are listed below:

- Specific Power in the Core
- Moderator Temperature
- Fuel Temperature
- Soluble Boron Concentration during Depletion

Other issues related to the operating conditions are inserts in the fuel assemblies during depletion, and axial burnup distribution. These are discussed in sections 4.7.1.2.2 and 4.7.2.1, respectively.

Previous studies [V.R] have evaluated the effect of the above core depletion parameters on the neutron multiplication factor. These studies demonstrate that for the moderator temperature, fuel temperature and soluble boron concentration, higher values result in higher neutron multiplication factors. While the effect of the specific power on the maximum k-eff is comparatively small (see studies presented in Table 4.7.16 of this report), it is recognized that a lower specific power, not a higher specific power, is the more conservative assumption, as discussed in NUREG/CR-6665 [V.V]. To take this into consideration, the design basis analyses have been performed with a conservatively low specific power. A specific power of 60% of the core average specific power was used as the conservatively low value. This assumption is based on the studies performed for the HI-STAR 100 Methodology, which indicate that only a small fraction of assemblies PROPRIETARY TEXT REMOVED would have a discharge burnup (and hence average specific power) of less than PROPRIETARY TEXT REMOVED of the corresponding core average value, and is well below the lowest specific power for any assembly at IP3. Note that the use of a lower bound specific power presents a slight deviation from the original HI-STAR 100 methodology; it is more conservative.

In summary, upper bound or conservatively high values are established for all parameters except for the specific power where a conservatively low value is used.

PROPRIETARY TEXT REMOVED The parameters used in the analysis are listed in Table 4.5.2 and are taken either from [L.K], or represent data directly provided by IP-3 as follows:

Specific Power: Based on results presented in Appendix A of [L.K]. PROPRIETARY TEXT REMOVED

Moderator Temperature: Hot Channel temperature provided by IP-3, PROPRIETARY TEXT REMOVED

Fuel Temperature: Taken from Appendix A of [L.K], PROPRIETARY TEXT REMOVED

Soluble Boron Concentration: Upperbound value for cycle-average concentration.

To further confirm that higher values result in higher neutron multiplication factors in the STC, parametric studies for those parameters were performed with results presented in Table 4.7.16. The studies show that for the moderator temperature, higher values result in higher neutron multiplication factors, whereas the fuel temperature, soluble boron concentration and specific power have a comparatively small effect.

4.7.1.2.2 Fuel Inserts and Burnable Poisons

Fuel assemblies can contain various forms of control components during in-core depletion, such as Burnable Poison Rod Assemblies (BPRAs), Control Rods (CRs), and similar devices. All these components are inserted into the guide tubes of the assembly during depletion. Additionally, assemblies may contain Integral Fuel Burnable Absorbers (IFBAs), consisting of neutron absorbing material as part of, or replacing fuel pellets. Below, each of these devices is briefly described (Section 4.7.1.2.2.1), its reactivity effect in the STC is characterized (Section 4.7.1.2.2.2), and, the approach taken in the burnup credit evaluation is outlined (Section 4.7.1.2.2.3).

Additionally, fuel assemblies may contain an Instrument Tube Tie Rod (ITTR) in the instrument tube, together with any of the inserts in the guide tubes or burnable poisons listed above.

4.7.1.2.2.1 Description of Components and Principal Behavior

Burnable Poison Inserts (BPIs)

These inserts include Burnable Poison Rod Assemblies (BPRAs) and Wet Annular Absorbers (WABAs) and are usually placed into assemblies in the first cycle only. The rods contain a certain amount of B-10, in the form of Al_2O_3-B_4C (WABAs) or SiO_2-B_2O_3 (BPRAs, also called Pyrex) in cylindrical or annular pellets inside a Zircaloy or stainless steel cladding. Axially, the poisoned area covers practically the entire active fuel length. At the end of the first cycle the B-

10 is practically depleted, and the component is usually removed from the assembly for the subsequent cycles. However, there have been instances where the component was left in the assembly for more than one cycle.

A detailed study [V.J] has been performed on the reactivity effect of BPIs. The results of this study show that the presence of the burnable poison inserts results in an increase of the reactivity of the assembly. This is a result of the reduction of water in the assembly (the poison rods replace the water usually present in the guide tubes) and the presence of the neutron absorber, which both cause a hardening of the neutron spectrum, thereby increasing the plutonium production which in turn increases reactivity. The longer the poison rods remain in the assembly, the larger is the resulting increase in reactivity. If the poison rods are removed after the first cycle of the assembly, an increase in reactivity of less than 0.012 delta-k is reported in [V.J]. If the poison rods remain in the assembly for three cycles, the reactivity effects increases to up to about 0.03 delta-k [V.J], compared to an assembly with guide tubes filled with water.

Integral Fuel Burnable Absorbers (IFBAs)

Integral burnable absorbers are integral to the fuel rods, and therefore do not replace the water in the guide tubes. Consequently, the spectrum hardening effect of the IFBAs, and therefore the reactivity effect, is significantly lower compared to the BPIs and CRs. A detailed study of the reactivity effect of IFBAs in [V.L] shows that in many cases the reactivity effect is negative, i.e. reducing the reactivity of the assembly. Only in some specific cases, a positive reactivity effect is identified in [V.L], with a maximum delta-k of 0.01. Note that neither [V.J] nor [V.L] evaluated the concurrent presence of BPRAs/WABAs and IFBAs.

Control Rods (CRs)

Control Rods are used for short term reactivity control in the core. They are connected to a control rod drive which allows axial movement of the CR during the reactor operation. Typically, at full power, most CRs are completely withdrawn from the active region of the fuel, while some CRs may be inserted only slightly into the active region. However, in some early reactor operations, deeply inserted CRs were used in some assemblies throughout an entire cycle (called a "rodded" cycle), i.e. CRs were used in a way similar to BPIs. CRs consist of highly neutron absorbing materials such as boron carbide (B_4C) or silver-indium-cadmium (AgInCd). In [V.K], a detailed study of the reactivity effect of CRs of the B_4C and AgInCd type is documented. From the results presented in [V.K], the following conclusions can be drawn:

- If CRs are fully inserted for the whole life of the assembly (45 GWd/MTU in [V.K]), the increase in reactivity can be up to 0.12 delta-k, compared to an assembly with guide tubes filled with water.
- If CRs are partially inserted into the active fuel region of the assembly (up to 8 inches) for the entire life (45 GWd/MTU) of the assembly, the increase in reactivity is less than 0.03 delta-k.
- If CRs are fully inserted into the assembly, but only for the first 15 GWd/MTU, the increase in reactivity after 45 GWd/MTU is also less than 0.03 delta-k.

In summary, the studies documented in [V.K] show that while there is a potential for a large reactivity effect from fully inserted CRs, the cases corresponding to actual reactor operating practices result in much lower reactivity effects.

Hafnium Inserts

Hafnium is a strong neutron absorber and is used as an insert to suppress the core flux in selected regions. It is typically used in already highly burned assemblies in their last irradiation cycle, and the assemblies gain little additional burnup (6 GWd/MTU or less) during that cycle.

Instrument Tube Tie Rods (ITTRs)

A fuel assembly may contain an ITTR in the instrument tube, independent of any other insert. Studies performed for the MPC-32 [K.A] have shown that the presence of the ITTR has a negligible effect from a criticality perspective. Therefore, no further evaluations of ITTRs are necessary.

Conclusion on Inserts

The studies in [V.J], [V.K] and [V.L] were performed with the SCALE, HELIOS, and KENO computer codes, whereas the burnup credit evaluations documented here use CASMO and MCNP. Also, those studies use a hypothetical storage cask, which is similar to, but not identical to the STC basket from a criticality perspective. Further, no concurrent presence of BPRAs and IFBAs are evaluated. To demonstrate that the results and conclusions are applicable to the STC, a number of calculations are performed for the IP-3 fuel assembly type in the STC. The cases evaluated and the results are discussed in the following subsections and are generally consistent with results and conclusions in [V.J], [V.K] and [V.L].

4.7.1.2.2.2 Reactivity Effect of Inserts

Several studies are performed to evaluate the principal reactivity effects of the inserts, taking into consideration the specific usage of those items at IP-3. The design basis cases are then selected based on the results of these studies.

Two different types of BPIs have been used at IP-3, BPRAs (containing Pyrex) and WABAs (containing B_4C mixed with aluminum oxide), with the Pyrex being known for having a larger effect on the reactivity of the spent fuel. Regarding the usage of those inserts note the following:

- BPRAs were only used for general reactivity control in the first few cycles, and thereafter for some time in smaller numbers for flux control on the periphery of the core where they were inserted in the last cycle that the assembly was irradiated in the core. The last assembly that was exposed to BPRA inserts was discharged in 1999, and no further use of BPRAs is planned. All studies with BPRAs are therefore performed for a cooling time of 10 years instead of the cooling time of 5 years used in all other calculations and studies.

- WABAs have been used for general reactivity control for most cycles except the first few ones. The length of the poisoned region the WABA varies between 120 and 128 inches for later cycles, and up to 134 inches in earlier cycles. This poison area is centered to the active region. This leaves an area at the top and bottom of the assembly that is not directly affected by the poison. Studies to evaluate the effect of the inserts were performed with the actual length of the WABAs. However, for the design basis calculations the WABAs are conservatively considered to be present along the entire length of the active region..

Regarding the use of fuel with IFBA note the following:

- The use of IFBA was started in cycle 9, with the number of IFBA rods increasing over time. Later cycles also used IFBA fuel in locations that contained WABA rods. The concurrent effect of WABA and IFBA therefore needs to be considered. Similar to the WABA, the absorber in the IFBA rods is only present in the center 120 to 128 inches of the assembly. However, similar to the WABA, the IFBA is considered in the studies discussed below to be only present over this center section of the active region, while for the design basis calculations they are conservatively assumed to cover the entire active length of the fuel.
- BPRAs may or may not have been inserted into assemblies with IFBA rods. However, IFBA rods were only used, in conjunction with BPRAs, in cycles 9 and 10 where BPRAs were used on the periphery for flux suppression. Since the BPRAs were inserted in those assemblies only at the end of the irradiation period when any IFBA absorber was already depleted, no concurrent presence of IFBA and BPRA would have occurred. All studies with BPRAs are therefore performed without IFBAs, and any potential effect of the sequential presence of IFBA and BPRAs is bounded by the assumed presence of the BPRA for the entire irradiation period.
- IFBA rods may also have been present in assemblies with potential control rod insertion or assemblies with hafnium insertion. However, those devices are typically not used in fresh fuel, and any potential effect of the concurrent or sequential presence of those devices and IFBA would be bounded by the assumed full insertion of those devices during the entire irradiation time.

Studies were consequentially performed for the following conditions

- No inserts (guide tubes filled with water), no IFBA
- No inserts (guide tubes filled with water), IFBA (two numbers of IFBA rods, including the maximum number)
- BPRAs, no IFBA
- WABA, no IFBA
- WABA, IFBA (two numbers of IFBA rods, including the maximum number)
- CRs fully inserted, no IFBA
- CRs partially inserted (8 inches), no IFBA
- Hafnium, no IFBA

The calculations are performed for initial enrichments between 2.0 wt% and 5.0 wt%, and for a burnup close to the design basis limiting burnup. All calculations are performed for 5 years

cooling times, except for the calculations with the BPRAs, which are performed for 10 years cooling time (see above). In all calculations, the respective condition is assumed for the entire irradiation period. The results of all calculations, including comparisons between various cases are listed in Table 4.7.6 and Table 4.7.7.

The results and comparisons show two bounding conditions:

- WABAs inserted for the entire irradiation of the assembly with IFBA rods bounds
    - WABAs without IFBAs
    - Guide tubes filled with water, with and without IFBA
    - BPRAs
    - CRs partially inserted

  But does not bound CRs or Hafnium
- CRs fully inserted for the entire irradiation of the assembly case bounds
    - Fully inserted hafnium rods.

4.7.1.2.2.3 Approach used in the Burnup Credit Evaluation

The highest reactivity effect in the cases listed above is shown for the case with control rods fully inserted for the entire irradiation period of the assembly. However, this case does not correspond to any known practice in reactor operation. In practice, since assemblies are shuffled around in the core between cycles, an assembly would be located under a control rod bank only for part of its irradiation history. Even more importantly, plant operating procedures restrict control rod insertion to a small number of assembly positions during full power operation. The number of assemblies potentially affected, and exposure of each such assembly to control rod insertion is therefore limited. Based on assembly and plant records, i.e. assembly and control rod location in the core, and assembly burnup during a cycle, such assemblies can be identified. However, the depth of insertion is much more difficult to determine for each assembly, and records showing the detailed insertion history for an individual assembly might not be available. Furthermore, previous calculations indicate that the reactivity effect of the maximum permissible (partial) control rod insertion is close to the reactivity effect of a fully inserted control rod. Limiting the insertion depth of control rods in the calculations is therefore neither practical nor beneficial.

To account for the many potential operating histories in a conservative way, two loading configurations are evaluated and a separate burnup versus enrichment curve is determined for each configuration. The design basis configurations that are considered are:

- Configuration 1A: Assemblies that have not been located in any cycle under a control rod bank that was permitted to be inserted during full power operation (per plant operating procedures) or where it can be shown that the insertion did not exceed 8 inches
    - Following the recommendations in [V.J, pg 71], it is assumed that all fuel assemblies contained BPIs throughout the entire irradiation time of the assembly unless full control rod insertion is considered.

- The highest possible number of WABA rods, 20 per assembly, is used. This assumption bounds all potential and hypothetical reactivity effects resulting from BPIs.
- The highest possible number of IFBA rods, 148 per assembly, is used in concurrent presence with 20 WABA rods. This assumption bounds all potential and hypothetical reactivity effects resulting from IFBA rods.

- Configuration 1B: Assemblies that have been located under a control rod bank that was permitted to be inserted during full power operation and where the insertion was more than 8 inches. These fuel assemblies are depleted with full CR insertion over the irradiation period.

4.7.2 Reactivity Effect of Burnup Distribution

4.7.2.1 Axial Burnup and Enrichment Distribution

Irradiated Fuel Assemblies are not burned evenly over the height of the assembly. Rather, they exhibit an axial burnup distribution, i.e. the burnup of the fuel is a function of the axial location of the fuel within the assembly. In general, the fuel at the top and bottom end of the assembly shows a lower burnup than the fuel in the axial center of the assembly. This is caused by the increased neutron loss and therefore decreased neutron flux towards the top and bottom end of the assembly during irradiation in the reactor core. The reactivity of spent fuel is a strong function of the fuel burnup, with reactivity decreasing when the burnup increases. However, the potential increase in reactivity due to the lower burnup at the top and bottom end of the assembly is offset by the increased neutron leakage in these areas. Previous experience indicates that at a lower burnup, the axial burnup distribution results in a decrease in reactivity compared to a case with an axially constant burnup, while at higher burnups the axial burnup distribution results in an increase in reactivity compared to a case with an axially constant burnup. As a conservative approach, an axially constant burnup is used for lower burnups (i.e. the potential decrease in reactivity for this condition is neglected), and an axial profile is used for higher burnups. To ensure that the most reactive condition is considered, all calculations are performed for both an axially constant burnup and the burnup distribution are performed, and the higher of the two k_{calc} values is used to calculate k_{eff}.

The results of the calculations with all profiles from Section 4.5.3 are presented and compared in Table 4.7.13. Please note:

- In all cases, the calculation with the Westinghouse 17x17 is used as the reference for the comparison.
- Calculations for natural blankets are only performed for enrichments in the central part of the fuel of 3 wt% or more, since assemblies with lower enrichments would not have had natural blankets.
- Likewise, calculations with enriched blankets of 3.2 wt% enrichments are only performed fuel with enrichments in the central section of the assembly of 4 wt% or more.

- In the calculations with natural or enriched blankets, the pellets in the blanket regions are modeled as annular pellets, with an annulus diameter of 50% of the pellet OD.

The calculations presented in Table 4.7.13 support the following conclusions:

- The non-blanketed profiles (Westinghouse 15x15, 17x17, Flat) are always bounding. As stated above, this provides additional margin since those assemblies have a longer cooling time than the 5 years used in the design basis criticality calculations.
- The Westinghouse 15x15 profiles and the profiles from the NUREG result in similar k-eff values as, or are bounded by the Westinghouse 17x17 profiles, providing additional assurance that the selection of the axial profiles is appropriate and conservative.
- Profiles for fuel with natural and enriched blankets result in maximum k-eff values that are significantly lower than those for the non-blanketed assemblies. The difference is between about 0.01 and 0.03 delta-k for natural blankets, and between about 0.005 and 0.015 delta-k for enriched blankets. This provides additional margin for those assembly types, which may have cooling times closer to 5 years used in the analysis.

Overall, the analysis is considered adequate and conservative for all fuel used at IP3, and all fuel assemblies currently in the IP3 spent fuel pool, up to and including assemblies unloaded in cycle 16. Future assemblies, i.e. assemblies unloaded from cycle 17 and following, will be evaluated before they are loaded into the STC to ensure they are bounded by the design basis analyses.

4.7.2.2 Planar Burnup Distribution

Due to the neutron flux gradients in the reactor core, assemblies can show a tilted burnup distribution, i.e. differences in burnup between portions or quadrants of the cross section of the assembly. PROPRIETARY TEXT REMOVED. To alleviate any concerns regarding the radial burnup gradients, the design basis calculations that confirm compliance with the regulatory limits assume radial burnup gradients. Note that this change presents a slight deviation from the original HI-STAR 100 methodology; it is more conservative.

4.7.3 Transfer of Isotopic Compositions

4.7.3.1 Interpolation of Isotopic Compositions for Intermediate Burnups

Since it is necessary to model the axial burnup distribution, a large number of isotopic compositions at irregular burnups are required. Given the significant number of criticality calculations and studies performed for the burnup credit evaluations, it would be impractical to perform CASMO-4 depletion calculations for each of these burnups. Instead, CASMO-4 runs are performed for fixed burnups at 2.5 GWd/MTU intervals (or less), and intermediate isotopic values are determined by linear-linear interpolation. PROPRIETARY TEXT REMOVED.

4.7.3.2 Assembly Average Isotopic Compositions

Assembly average isotopic compositions are extracted from the CASMO-4 output files and used in the MCNP runs, i.e. applied equally to all fuel rods or fuel rod sections with the corresponding burnup. PROPRIETARY TEXT REMOVED

4.7.4 Eccentric Fuel Assembly Positioning

Normally, the fuel assemblies are expected to be located at the center of the fuel basket cell. To investigate the potential reactivity effect of eccentric positioning of assemblies in the cells, additional MCNP4a studies were performed. For eccentric positioning all the fuel assemblies are positioned toward the center of the fuel basket The results of these studies are presented in Table 4.7.10 and indicate that in most cases the eccentric fuel positioning with the assemblies placed closest to the center of the basket result in an increase in reactivity. In any case, the condition with the highest reactivity shown in that table is used in the design basis calculations.

4.7.5 Basket Tolerances

MCNP4a calculations are performed to evaluate the tolerances of the various basket dimensions of the STC basket. The various basket dimensions are inter-dependent, and therefore cannot be individually varied (i.e., reduction in one parameter requires a corresponding reduction or increase in another parameter). Thus, it is not possible to determine the reactivity effect of each individual dimensional tolerance separately. However, it is possible to determine the reactivity effect of the dimensional tolerances by evaluating the various possible dimensional combinations. To this end, an evaluation of the various possible dimensional combinations was performed using MCNP4a, with fuel assemblies centered in the fuel storage locations. Calculated k_{calc} results (which do not include the bias, uncertainties, or calculational statistics) for a number of dimensional combinations are presented in Table 4.7.9 and show that the results are statistically identical. Consistent with the approach in [K.C], the design basis calculations here are based on a combination of minimum cell pitch, minimum cell ID and nominal wall thickness.

Note that for the neutron absorber of the basket, a lower bound B-10 amount of PROPRIETARY TEXT REMOVED of the minimum is used (see Section 4.4, Assumption 5), so no further uncertainty of the absorber needs to be considered.

4.7.6 Moderation and Flooding Conditions Analyzed

The studies for the generic MPC-32 in [K.C] all demonstrate that the moderation by water to the most reactive credible extent corresponds to the internally fully flooded condition of the basket, with the pellet-to-clad gap in the fuel rods also flooded with water. Stated differently, all those studies show that a reduction in the amount of internal water, in the form of reduced water

density, reduced water level or preferential flooding, results in a reduction of reactivity. To confirm that this is also true for the STC, the reactivity effect of internal water density was evaluated here. The results of the calculations are presented in Table 4.7.12 and show that, as expected, the optimum moderation condition corresponds to full water density.

To determine the trend of the reactivity effect of the moderator temperature variation, a number of CASMO-4 calculations are performed for various enrichments with a maximum value of up to 5.0 wt% ^{235}U and corresponding burnups close to the final loading curve. The results presented in Table 4.7.8 show that increased temperature results in a reduction of reactivity regardless of the soluble boron content, so full water density (corresponding to 39.2 °F) is bounding, and is therefore used in all MCNP calculations.

4.7.7 Criticality Calculations

4.7.7.1 Calculation of Maximum k_{eff} for Normal Conditions

Using the calculational model shown in Figure 4.5.1 and 4.5.2 and the design basis fuel assembly specified in Table 4.5.1, the k_{eff} in the fuel basket has been calculated with MCNP4a for both configurations. The determination of the maximum k_{eff} values, based on the formula in Section 4.2, was calculated for an initial enrichment of 5.0 wt% ^{235}U for Configuration 2 and for initial enrichments between 2.0 wt% ^{235}U and 5.0 wt% ^{235}U, and the corresponding burnup listed in Table 4.7.3, for Configuration 1. The results show that the maximum k_{eff} of the fuel basket loaded in accordance with either Configuration 1 or Configuration 2 is less than 0.95 at a 95% probability and at a 95% confidence level without credit for soluble boron. See Table 4.7.1 and Table 4.7.2 for detailed results.

4.7.7.2 Establish Loading Curves

To generate the STC loading curves, calculations are performed at various enrichments and burnups, and for each of the configurations 11A and 1B described in Section 4.7.1.2.4. The minimum required burnup for each enrichment and configuration is then determined by appropriate interpolations. The resulting burnups are listed in Table 4.7.3. The table shows the nominal burnups, and additionally burnups increased by 5% to account for any uncertainties in the plant records of the burnups. Those increased burnups are also shown graphically in Figure 4.7.1. To validate those burnups, additional calculations are performed for the two configurations, for selected enrichments, and specifically for the nominal burnups in Table 4.7.3. Results of those calculations are summarized in Table 4.7.1. The highest value for the maximum $k_{eff,}$ value including all biases and uncertainties at a 95-percent confidence level is below the regulatory limit of 0.95.

ISG 8 Rev. 2 recommends an upper limit for burnup credit of 50 GWd/MTU, based on an apparent lack of data above this value. This affects configuration 1B, where a burnup required exceeding 50 GWd/mtU was initially determined for an enrichment of 5.0 wt%. Configuration B

is therefore limited to an enrichment of 4.5 wt% with a corresponding burnup credit of 50 GWd/mtU.

4.7.8 Abnormal and Accident Conditions

The effects on reactivity of credible abnormal and accident conditions are examined in this section. This section identifies which of the credible abnormal or accident conditions will result in exceeding the limiting reactivity ($k_{eff} \leq 0.95$). For those accident or abnormal conditions that result in exceeding the limiting reactivity, a minimum soluble boron concentration is determined to ensure that $k_{eff} \leq 0.95$. The double contingency principal of ANS-8.1/N16.1-1975 [V.H] specifies that it shall require at least two unlikely, independent and concurrent events to produce a criticality accident. This principle precludes the necessity of considering the simultaneous occurrence of multiple accident conditions. For those cases where the reactivity of the accident is expected to be greater than the limit of $k_{eff} \leq 0.95$ with no soluble boron credit, calculations were performed with soluble boron and the concentration required to meet the limit is specified.

4.7.8.1 Abnormal Temperature

All calculations for the fuel basket are performed at a water temperature of 39.2 °F (4 °C). As shown in Section 4.7.7 above, the temperature coefficient of reactivity is negative; therefore no additional calculations are required, because a further increase in temperature reduces the reactivity.

4.7.8.2 Misplaced Assembly

Dropped Assembly

For the case in which a fuel assembly is assumed to be dropped on top of the STC, the fuel assembly will come to rest horizontally on top of the STC, with a minimum separation distance from the active fuel region of more than 12 inches, which is sufficient to preclude neutron coupling (i.e., an effectively infinite separation). Consequently, the horizontal fuel assembly drop accident will not result in a significant increase in reactivity. It is also possible to vertically drop an assembly into an empty location or a location occupied by another assembly. Another condition that could potentially result in minor damage to fuel assemblies would be the drop of the HI-TRAC during lifting operations with the VCT. Such vertical impacts would at most cause a small compression of the assembly, reducing the water-to-fuel ratio and thereby reducing reactivity. Furthermore, the reactivity effect of a dropped assembly would always be bounded by the misloading condition discussed below, and the soluble boron maintained in the spent fuel pool water in accordance with the plant technical specifications assures that the true reactivity is always less than the limiting value for such dropped fuel accident.

Mislocated Assembly

The spaces between the basket and the inner diameter of the STC are too small for a fuel assembly. Mislocation of an assembly on the outside of the basket is therefore not credible.

Misloaded Assembly

Fresh fuel will not be present in the pool during loading of the STC[†]. The actual inventory of the pool was therefore analyzed to consider the credible misloading conditions. At lower enrichments, most assemblies are bounded by the loading curves. However, at higher enrichments, there are assemblies that are not meeting the loading curves. The biggest burnup discrepancy exists at 5 wt% enrichment, where some assemblies have burnups as low as about 40 GWd/MTU. There are also currently 4 assemblies that are well below the loading curve, with burnups around 20 GWd/MTU and enrichments between 3.8 and 5 wt%. To represent misloading of such assemblies in a conservative manner, the following misloading conditions for both Configuration A and Configuration B were analyzed:

- Loading of all spent fuel assemblies in the STC basket at 5.0 wt% and burnup of 40 GWd/MTU. This is conservative since it represents the assemblies with the largest difference to the loading curve (except for the four severely underburned assemblies addressed below), and assumes that those are present in all locations in the STC basket. This is also representative of the future SFP content, since the range of burnups of the discharged assemblies are not expected to change because operational parameters of the plant remain the same.
- Non-uniform loading with 8 assemblies at 5.0 wt% ^{235}U (4.5 wt% for Configuration 1B), and the corresponding burnup on the periphery and 4 assemblies at 5.0 wt%, and burnup of 20 GWd/MTU in the center of fuel basket. This is conservative since it assumes that all four currently present severely underburned assemblies are accidently loaded into the same basket, and are loaded into the center of the basket where they have the highest effect on reactivity. No significant increase in the number of such assemblies is expected in the future.

Without credit for the presence of the soluble boron in the water, the maximum k_{eff} exceeds the limit of 0.95. Additional calculations were therefore performed which credit the presence of soluble boron in the water. Results for those misloading conditions are summarized in Table 4.7.14. The soluble boron levels are determined by interpolating or extrapolating the results to obtain the boron content that corresponds to the reactivity of 0.9450. The maximum soluble boron levels for Configuration 1A and Configuration 1B are listed in Table 4.7.4.

The misloading conditions were selected based on the current inventory of the IP3 spent fuel pool, and, as stated above, it is not expected that the principal inventory will change in the future. However, should there be additional severely underburned assemblies in the spent fuel pool at any time in the future, additional measures will be taken as follows to ensure the assumptions in the analyses are not violated: Severely underburned fuel assemblies permanently transferred to the Spent Fuel Pit will be fitted with a blocking device to prevent inadvertent handling of the fuel

[†] Nevertheless, fresh fuel is conservatively assumed for the configuration with 8 assemblies to simplify the analysis for this configuration

assembly during STC loading. Considered severely underburned are those assemblies that have a burnup more than 6 GWd/mtU below the loading curve for Configuration 1A. This is based on the first (uniform) misloading configuration described above, which uses a burnup of 40 GWd/mtU instead of the burnup of 46.4 GWd which is used for Configuration 1A. The details for those requirements will be implemented in the applicable procedures.

4.7.9 Margin Analysis and Comparison with Remaining Uncertainties

Consistent with ISG 8, Rev. 2, this section evaluates the potential margin in the analyses, and then compares this margin with the effect of uncertainties that are not explicitly addressed in the design basis calculations.

4.7.9.1 Isotopic Compositions and Cross Sections Margin

Throughout the burnup credit evaluations, margins are added to account for uncertainties in the calculations methods, either as correction factors for individual isotopes, or as reactivity margins. These margins are based on benchmark experiments, i.e. on the comparison of calculated and measured values. The underlying assumption in all cases is that the experiments are correct, and that all differences between measured and calculated values are due to inaccuracies in the calculational methods or the data. This section presents a brief evaluation and discussion of the overall amount of margin added for these uncertainties.

PROPRIETARY TEXT REMOVED. Overall, i.e. between the first and last case, the reactivity increases by about 0.07 delta-k, and the burnup requirement increases by about 11 GWd/MTU. This level of uncertainty, just in the isotopic composition and cross section, appears extremely high.

In addition, the design basis calculations still contain a substantial number of other conservative or bounding assumptions, as listed below.

- Worst combination of basket tolerances is used.
- Fuel to Clad Gap is assumed flooded with pure water.
- Stack density of fuel is assumed to be 97.5% of the theoretical fuel density.
- Credit is taken for only PROPRIETARY TEXT REMOVED of the ^{10}B in the neutron poison.
- It is assumed that all 12 locations of the STC basket are loaded with fuel of the highest permissible reactivity for the respective location, i.e. that assemblies have the minimum burnup for the given enrichment.
- Bounding core operating parameters are used for all fuel assemblies.
- Assemblies are assumed to have the bounding axial burnup profile or an axially constant burnup, whichever results in a higher reactivity.
- Depletion calculations assume bounding burnable poison inserts in all assemblies.

- STC is assumed to be pure unborated water for normal conditions, while the STC is in fact filled with borated water at a minimum soluble boron concentration of 2000 ppm. This corresponds to additional margin of the order of 0.20 delta-k, although some of this is being used to address various accident conditions.

4.7.9.2 Fuel Geometry Changes

During irradiation in light water reactors the fuel assemblies undergo physical changes associated with irradiation and residence time in an operating reactor. Some of those changes are clad thinning due to fuel rod growth, fuel densification, collapse of the pellet/cladding gas gap in the fuel rod, and crud build up on the outside surface of the fuel rod. These fuel geometry changes are accounted for in the following way:

- Pellet densification: the criticality methodology considers an upperbound fuel pellet density and therefore no additional calculations are required.
- Crud buildup: crud buildup on the cladding increases the fuel to moderator ratio and therefore reduces reactivity and therefore no additional calculations are required.
- Clad geometry: both clad creepdown and fuel rod growth have the potential to decrease the fuel-to-moderator ratio in the geometry, thus potentially increasing reactivity. To address clad creepdown, the clad ID was reduced such that the pellet-clad gap was only 0.0001 inches, while simultaneously reducing the clad OD to preserve overall clad volume. Then, to address clad thinning due to fuel rod growth, the clad OD was further reduced to allow for the maximum possible fuel rod growth. The following equations describe the creep model:

$$VC = \pi * L * ((\frac{OD}{2})^2 - (\frac{ID}{2})^2) \qquad (4.7.9\text{-}1)$$

$$OD2 = 2 * \sqrt{(\frac{VC}{\pi * L2} + (\frac{ID}{2})^2)} \qquad (4.7.9\text{-}2)$$

$$VC2 = \pi * L * ((\frac{OD2}{2})^2 - (\frac{ID}{2})^2) \qquad (4.7.9\text{-}3)$$

$$ODc = 2 * \sqrt{(\frac{VC2}{\pi * L} + (\frac{IDc}{2})^2)} \qquad (4.7.9\text{-}4)$$

Where:
L = nominal active fuel length
L2 = active length with fuel rod growth
OD = nominal cladding outer diameter
ID = nominal cladding inner diameter
VC = nominal cladding volume

OD2 = cladding outer diameter due to fuel rod growth
VC2 = cladding volume due to fuel rod growth
IDc = cladding inner diameter due to clad creep down (pellet + 0.0001 inches)
ODc = cladding outer diameter due to clad creep down and fuel rod growth

Results of calculations considering those irradiation effects are shown in Table 4.7.15.

4.7.9.3 Spacer Grids

In the design basis calculations the spacer grids are replaced by water. To demonstrate a negligible reactivity effect of spacer grids, even with the credited amount of soluble boron, a number of calculations were performed. Results of the calculations are shown in Table 4.7.15.

4.7.9.4 External Reflection

The design basis model includes the STC surrounded by about 12 inches of water on all sides. To show that this bounds all expected actual configurations, a study is performed with variations in the external conditions. The configurations analyzed are

- specifying a reflective boundary condition at the outer surfaces of the water reflector, thus increasing the neutron reflection; and
- replacing the water reflector with a void, thus reducing the neutron reflection.

Results are listed in Table 4.7.17. They show that the differences in external reflection have a negligible effect on the k_{calc} of the system, and that the design basis calculations are bounding. The design basis model is therefore appropriate for all expected conditions of the STC during transfer.

4.7.9.5 Uncertainty in Inserts

The reactivity effect of potential uncertainties in burnable inserts was analyzed. The absorber density was increased by 20% in the depletion calculations and the following conditions were considered:

- No inserts (guide tubes filled with water), IFBA
- WABA, no IFBA
- WABA, IFBA
- CRs, no IFBA

The results of these calculations are shown in Table 4.7.19.

4.7.9.6 Comparison of Margin to Uncertainties

The potential margin in the analysis is of the order of 0.07 Delta-k (Section 4.7.9.1)

The reactivity effect of potential uncertainties or phenomena not included in the design basis calculations is listed below, including a total. Note that the total is conservatively determined by arithmetic addition, essentially treating all components as a bias.

- Fuel Geometry Changes 0.0012 Delta-k (Section 4.7.9.2)
- Spacer Grids 0.0000 Delta-k (Section 4.7.9.3)
- External Reflection 0.0000 Delta-k (Section 4.7.9.4)
- Uncertainty in Inserts 0.0012 Delta-k (Section 4.7.9.5)

- Total 0.0024 Delta-k

This only represents about 4% of the estimated margin. The calculations therefore contain sufficient margin to offset these and similar uncertainties not explicitly included in the model

Table 4.7.1
Summary of the Criticality Safety Analyses for Configuration 1, Normal Condition

Parameter	Configuration 1A				Configuration 1B			
Enrichment, wt% ^{235}U	2.0	3.0	4.0	5.0	2.0	3.0	4.0	4.5
Burnup, GWd/MTU	5.1	21	35.1	46.4	5.7	27.2	42.5	50.0
Calculated k_{eff}	0.9024	0.9200	0.9215	0.9210	0.9086	0.9199	0.9211	0.9201
sigma	0.0003	0.0003	0.0003	0.0003	0.0003	0.0003	0.0003	0.0004
PROPRIETARY TEXT REMOVED PROPRIETARY TEXT REMOVED PROPRIETARY TEXT REMOVED								
PROPRIETARY TEXT REMOVED PROPRIETARY TEXT REMOVED PROPRIETARY TEXT REMOVED								
MCNP Benchmark bias	0.0013	0.0013	0.0013	0.0013	0.0013	0.0013	0.0013	0.0013
MCNP Benchmark bias trunc	0.0013	0.0013	0.0013	0.0013	0.0013	0.0013	0.0013	0.0013
MCNP Benchmark uncert	0.0086	0.0086	0.0086	0.0086	0.0086	0.0086	0.0086	0.0086
Total Bias	0.0078	0.0013	0.0013	0.0013	0.0077	0.0013	0.0013	0.0013
Total Uncertainty	0.0240	0.0226	0.0230	0.0249	0.0240	0.0226	0.0235	0.0246
Maximum k_{eff}	0.9349	0.9445	0.9464	0.9478	0.9409	0.9445	0.9465	0.9468
Regulatory Limiting k_{eff}	0.95	0.95	0.95	0.95	0.95	0.95	0.95	0.95

HOLTEC INTERNATIONAL COPYRIGHTED MATERIAL

Table 4.7.2
Summary of the Criticality Safety Analyses for Configuration 2, Normal Condition

Design Basis Burnup at 5 wt% ^{235}U	0.0 GWd/MTU
Soluble Boron	0 ppm
Uncertainties	
MCNP Benchmark Bias Uncertainty (95%/95%)	± 0.0086
Calculational Statistics (95%/95%, 2.0×σ)	± 0.0008
Fuel Eccentricity	Included
Reference k_{eff} (MCNP4a)	0.9250
Total Uncertainty (above)	0.0094
MCNP Benchmark Bias	0.0013
Maximum k_{eff}	**0.9357**
Regulatory Limiting k_{eff}	**0.95**

Table 4.7.3
Burnup Versus Enrichment Requirement for Configuration 1

Enrichment (wt% ^{235}U)	**Configuration 1A (WABA Insertion) Burnup (GWd/MTU)**		**Configuration 1B (Control Component Insertion) Burnup (GWd/MTU)**	
	Used in Analyses	Limit for Assembly Selection†	Used in Analyses	Limit for Assembly Selection†
2.0	5.1	5.4	5.7	6.0
2.5	13.1	13.8	17.9	18.8
3.0	21	22.1	27.2	28.6
3.5	28.6	30.0	35.5	37.3
4.0	35.1	36.9	42.5	44.6
4.5	40.7	42.7	50.0	52.5
5.0	46.4	48.7	n/a	n/a

† The column was generated by adding 5% to the corresponding value used in the analyses

Table 4.7.4
Summary of Accident Conditions for the STC

Case	Soluble Boron Requirement, ppm
Abnormal Temperature	Negative
Dropped Assembly – Vertical	Negligible
Dropped Assembly – Horizontal	Negligible
Misloaded Fresh Fuel Assembly in Configuration 1A	956 ppm
Misloaded Fresh Fuel Assembly in Configuration 1B	1025 ppm

Table 4.7.5
Reactivity Effect of Fuel Types

Enrichment (wt%)	Burnup (GWd/MTU)	Fuel Type 1 (Reference) k-calc	Fuel Type 2 vs Type 1 Delta k-calc ± Uncertainty (95/95)	Fuel Type 3 vs Type 1 Delta k-calc ± Uncertainty (95/95)
Configuration 1				
2.0	5	0.8807	-0.0001 ± 0.0008	-0.0002 ± 0.0008
3.0	20	0.8998	-0.0005 ± 0.0008	0.0009 ± 0.0008
4.0	35	0.8963	-0.0009 ± 0.0008	-0.0004 ± 0.0008
5.0	50	0.8827	0.0001 ± 0.0008	-0.0002 ± 0.0008
Configuration 2				
5.0	0	0.9198	-0.0005 ± 0.0023	0.0019 ± 0.0021

Table 4.7.6
Reactivity Effect of IFBA Rods†

Enrichment (wt%)	Burnup (GWd/ MTU)	None (Reference)	116 IFBA Rods	148 IFBA Rods	WABA (Reference)	WABA and 116 IFBA Rods	WABA and 148 IFBA Rods
		Calculated k_{eff}	Δk	Δk	Calculated k_{eff}	Δk	Δk
2.0	5	0.8807	0.0075	0.0079	0.8895	0.0063	0.0067
3.0	20	0.8998	0.0051	0.0053	0.9065	0.0039	0.0040
4.0	35	0.8963	0.0034	0.0035	0.9020	0.0021	0.0027
5.0	50	0.8827	0.0032	0.0035	0.8890	0.0022	0.0024

† The uncertainty of the differences is around 0.0008 for all calculations

Table 4.7.7
Reactivity Effect of Insert Types†

Enrichment (wt%)	Burnup (GWd/ MTU)	WABA and 148 IFBA Rods (Reference)	148 IFBA Rods vs IFBA+WABA	BPRA vs IFBA+WABA	Hafnium vs IFBA+WABA	CR vs IFBA+WABA	8" Top Node CR vs IFBA+WABA
		Calculated k_{eff}	Δk	Δk	Δk	Δk	Δk
2.0	5	0.8962	-0.0076	-0.0033	0.0056	0.0076	-0.0074
3.0	20	0.9105	-0.0054	-0.0019	0.0184	0.0203	-0.0041
4.0	35	0.9047	-0.0049	-0.0017	0.0247	0.0266	-0.0006
5.0	50	0.8914	-0.0052	-0.0046	0.0301	0.0316	0.0017

† The uncertainty of the differences is around 0.0008 for all calculations

Table 4.7.8
Reactivity Effect of Temperature Variation in the STC Fuel Basket

Boron Content		**0 ppm**				**600 ppm**				**1000 ppm**			
Temperature (°F)		39.2 (4 °C)	80.33 (300K)	212 (100 °C)	212 + 10% Void	39.2 (4 °C)	80.33 (300K)	212 (100 °C)	212 + 10% Void	39.2 (4 °C)	80.33 (300K)	212 (100 °C)	212 + 10% Void
Enrichment (wt%)	Burnup (GWd/MTU)	Δk	Δk	Δk	Δk	Δk	Δk	Δk	Δk	Δk	Δk	Δk	Δk
2.0	0	Reference	-0.0028	-0.0140	-0.0255	Reference	-0.0020	-0.0092	-0.0147	Reference	-0.0016	-0.0068	-0.0092
2.0	6	Reference	-0.0029	-0.0152	-0.0321	Reference	-0.0017	-0.0081	-0.0165	Reference	-0.0011	-0.0047	-0.0089
3.0	0	Reference	-0.0025	-0.0139	-0.0280	Reference	-0.0018	-0.0091	-0.0169	Reference	-0.0014	-0.0066	-0.0110
3.0	20	Reference	-0.0027	-0.0155	-0.0358	Reference	-0.0015	-0.0084	-0.0205	Reference	-0.0009	-0.0049	-0.0127
4.0	0	Reference	-0.0022	-0.0133	-0.0290	Reference	-0.0015	-0.0086	-0.0180	Reference	-0.0011	-0.0062	-0.0120
4.0	30	Reference	-0.0025	-0.0150	-0.0363	Reference	-0.0014	-0.0085	-0.0221	Reference	-0.0009	-0.0052	-0.0148
5.0	0	Reference	-0.0020	-0.0126	-0.0292	Reference	-0.0013	-0.0081	-0.0184	Reference	-0.0010	-0.0057	-0.0125
5.0	50	Reference	-0.0019	-0.0124	-0.0333	Reference	-0.0009	-0.0066	-0.0206	Reference	-0.0005	-0.0038	-0.0140

HOLTEC INTERNATIONAL COPYRIGHTED MATERIAL
SHADED AREAS DENOTE HOLTEC PROPRIETARY INFORMATION

Table 4.7.9
Reactivity Effect of Basket Tolerances for the STC Fuel Basket†

Enrichment (wt%)	Burnup (GWd/ MTU)	Reference	ID+Pitch Increase	ID+Pitch Decrease	Wall Thkns Increase	Wall Thkns Decrease
		Calculated k_{eff}	Δk	Δk	Δk	Δk
2.0	0	0.9047	0.0001	0.0002	0.0006	-0.0004
2.0	5	0.8966	-0.0008	-0.0004	-0.0002	-0.0008
5.0	0	1.1249	-0.0004	0.0016	0.0009	-0.0007
5.0	50	0.8904	-0.0001	0.0010	0.0006	-0.0010

† The uncertainty of the differences is around 0.0008 for all calculations

Table 4.7.10
Reactivity Effect of Eccentric Positioning

Case	Calculated k_{eff}	
	Assemblies Moved to basket Center	**Assemblies Centered in Cells**
12 Spent Fuel Assemblies, 2.0 wt%, 5 GWd/MTU	0.9027	0.8962
12 Spent Fuel Assemblies, 5.0 wt%, 50 GWd/MTU	0.8988	0.8914
Spent Fuel, Accident	0.9402	0.9323
8 Fresh Fuel Assemblies	0.9244	0.9198

Table 4.7.11
Effect of Different Isotopic Compositions
for Assemblies at 5.0 wt% Enrichment

PROPRIETARY TABLE REMOVED

Table 4.7.12
Reactivity Effect of Water Density Variation in the STC Fuel Basket for Assemblies at 5 wt% Enrichment

Water Density (g/cc)	**Reactivity at 50 GWd/MTU**
0.99	0.8951
0.98	0.8927
0.97	0.8887
0.96	0.8874
0.95	0.8840
0.94	0.8798
0.93	0.8783
0.92	0.8750
0.91	0.8703
0.90	0.8677
0.85	0.8500
0.70	0.7904
0.60	0.7416
0.40	0.6232
0.20	0.4730
0.10	0.4022
0.00	0.3409

Table 4.7.13
Reactivity Effect of Axial Burnup Profile†

a) Configuration 1A

Parameter		Configuration 1A							
Enrichment, wt% U-235		2		3		4		5	
Burnup, GWd/mtU		5.1		21		35.1		46.4	
		Max. k_{eff}	Delta-k	Max. k_{eff}	Delta-k	Max. k_{eff}	Delta-k	Max. k_{eff}	Delta-k
Reference Profile - W17x17		0.9349	-	0.9445	-	0.9464	-	0.9478	-
NUREG		0.9339	-0.0010	0.9386	-0.0059	0.9427	-0.0037	0.9468	-0.0010
Flat		0.9354	0.0005	0.9325	-0.0120	0.9296	-0.0168	0.9362	-0.0116
Natural Blankets	Annular Pellets	-	-	0.9229	-0.0216	0.9170	-0.0294	0.9208	-0.0270
	Full Pellets	-	-	0.9244	-0.0201	0.9160	-0.0304	0.9205	-0.0273
Enriched Blankets	Annular Pellets	-	-	-	-	0.9296	-0.0168	0.9366	-0.0112
	Full Pellets	-	-	-	-	0.9301	-0.0163	0.9370	-0.0108
Maximum k_{eff}		0.9354		0.9445		0.9464		0.9478	
Profile with Max. k_{eff}		Flat		W17x17		W17x17		W17x17	

† The standard deviation is around 0.0003 for all calculations

HOLTEC INTERNATIONAL COPYRIGHTED MATERIAL

Table 4.7.13 (continued)
Reactivity Effect of Axial Burnup Profile

b) Configuration 1B

Parameter		Configuration 1B							
Enrichment, wt% U-235		2		3		4		4.5	
Burnup, GWd/mtU		5.7		27.2		42.5		50	
		Max. k_{eff}	Delta-k	Max. k_{eff}	Delta-k	Max. k_{eff}	Delta-k	Max. k_{eff}	Delta-k
Reference profile - W17x17		0.9409	-	0.9445	-	0.9465	-	0.9468	-
NUREG		0.9400	-0.0009	0.9423	-0.0022	0.9428	-0.0037	0.9450	-0.0018
Flat		0.9409	0.0000	0.9425	-0.0020	0.9446	-0.0019	0.9456	-0.0012
Natural Blankets	Annular Pellets	-	-	0.9348	-0.0097	0.9333	-0.0132	0.9331	-0.0137
	Full Pellets	-	-	0.9349	-0.0096	0.9334	-0.0131	0.9335	-0.0133
Enriched Blankets	Annular Pellets	-	-	-	-	0.9408	-0.0057	0.9413	-0.0055
	Full Pellets	-	-	-	-	0.9421	-0.0044	0.9414	-0.0054
Maximum k_{eff}		0.9409		0.9445		0.9465		0.9468	
Profile with Max. k_{eff}		W17x17		W17x17		W17x17		W17x17	

HOLTEC INTERNATIONAL COPYRIGHTED MATERIAL

Table 4.7.13 (continued)
Reactivity Effect of Axial Burnup Profile

c) Reactivity Effect of W15x15 Profile

Parameter	Configuration 1A				Configuration 1B			
Enrichment, wt% U-235	4				4			
Burnup, GWd/mtU	35.1				42.5			
Reference k_{eff} - W17x17	0.9464				0.9465			
Profile - W15x15	1	2	3	4	1	2	3	4
Max k_{eff} - W15x15	0.9283	0.9333	0.9320	0.9414	0.9408	0.9431	0.9415	0.9477
Delta k	-0.0181	-0.0131	-0.0144	-0.0050	-0.0057	-0.0034	-0.0050	0.0012

HOLTEC INTERNATIONAL COPYRIGHTED MATERIAL

Table 4.7.14
Summary of the Criticality Safety Analyses for Configuration A and Configuration B, Accident Condition

Parameter	Uniform of 12 FAs				Non-Uniform of 4 and 8 Spent FAs			
	Configuration 1A		Configuration 1B		Configuration 1A		Configuration 1B	
Enrichment, wt% ^{235}U	5.0	5.0	5.0	5.0	5.0	5.0	5.0/4.5	5.0/4.5
Burnup, GWd/MTU	40.0	40.0	40.0	40.0	20/46.4	20/46.4	20/50.0	20/50.0
Soluble Boron Level	0	1000	0	1000	0	1000	0	1000
Calculated k_{eff}	0.9517	0.8559	0.9726	0.8822	1.0147	0.9161	1.0186	0.9232
sigma	0.0003	0.0003	0.0003	0.0003	0.0003	0.0003	0.0004	0.0003
PROPRIETARY TEXT REMOVED								
PROPRIETARY TEXT REMOVED								
Actinides Bias	-0.0004	-0.0004	-0.0004	-0.0004	-0.0004	-0.0004	-0.0004	-0.0004
Actinides Bias Truncated	0.0000	0.0000	0.0000	0.0000	0.0000	0.0000	0.0000	0.0000
Actinides Uncertainty	0.0083	0.0083	0.0083	0.0083	0.0083	0.0083	0.0083	0.0083
Total Bias	0.0000	0.0000	0.0000	0.0000	0.0000	0.0000	0.0000	0.0000
Total Uncertainty	0.0234	0.0234	0.0234	0.0234	0.0239	0.0239	0.0236	0.0236
Maximum k_{eff}	0.9757	0.8799	0.9966	0.9062	1.0392	0.9406	1.0430	0.9474
Target k_{eff}	0.9450	0.9450	0.9450	0.9450	0.9450	0.9450	0.9450	0.9450

HOLTEC INTERNATIONAL COPYRIGHTED MATERIAL

Soluble Boron Content	**321**	**571**	**956**	**1025**

Table 4.7.15
Reactivity Effect of Spacer Grids and Fuel Geometry Changes†

Soluble Boron Content, ppm	5.0 wt% ^{235}U, 0 GWd/MTU			5.0 wt% ^{235}U, 50 GWd/MTU		
	Reference k_{calc}	Spacer Grids Delta k_{calc}	Fuel Geometry Changes Delta k_{calc}	Reference k_{calc}	Spacer Grids Delta k_{calc}	Fuel Geometry Changes Delta k_{calc}
0	1.1265	-0.0015	n/c	0.8914	-0.0010	0.0012
600	1.0538	-0.0002	n/c	0.8326	-0.0002	0.0009
2500	0.8867	-0.0003	n/c	0.7016	-0.0012	-0.0015

† The uncertainty of the differences is around 0.0008 for all calculations

HOLTEC INTERNATIONAL COPYRIGHTED MATERIAL

Table 4.7.16
Reactivity Effect of the Core Operation Parameters†

Case	2.0 wt%, 5.0 GWd/MTU	5.0 wt%, 50.0 GWd/MTU
	Calculated k_{eff}	Calculated k_{eff}
Reference	0.8960	0.8927
Fuel Temp Decreased by 100°F	0.0002	-0.0010
Fuel Temp Increased by 100°F	0.0005	0.0003
Mod Temp Decreased by 20°F	-0.0020	-0.0058
Mod Temp Increased by 20°F	0.0039	0.0095
Soluble Boron Decreased by 100 ppm	-0.0008	-0.0013
Soluble Boron Increased by 100 ppm	0.0006	0.0001
Specific Power Decreased by 5 MW/MTU	0.0007	-0.0003
Specific Power Increased by 5 MW/MTU	0.0001	0.0004

† The uncertainty of the differences is around 0.0008 for all calculations

Table 4.7.17
Reactivity Effect of External Reflection

Condition	Calculated keff	Difference to Design Basis Calculation
Full External Water Reflection (Design Basis)	0.9199	Reference
Reflective Boundary Condition added	0.9199	0.0000
External Water replaced by Void	0.9187	-0.0012

Table 4.7.18
Comparison between STC and MPC-32 Design Basis Calculations

Parameter	**STC Design Basis Calculations**	**MPC-32 Design Basis Calculations**
Fuel Assemblies	WE 15x15	WE 17x17
Initial Fuel Enrichments	2.0 to 5.0 %	2.0 to 5.0 %
Minimum Burnup Requirement	about 44† GWd/MTU for 5% enrichment	about 55† GWd/MTU for 5% enrichment
Cooling Time	5 years	5 years
Bounding Operating Temperature	4 °C (39 °F)	4 °C (39 °F)
Neutron Poison	B-10 (fixed neutron absorber containing B_4C)	B-10 (fixed neutron absorber containing B_4C)
Assembly exposure to BPRs and CRs	Bounding BPR exposure for all assemblies	Bounding BPR exposure for all assemblies
Number of cells	12	32
Overpack	STC/HI-TRAC	HI-STAR

† Except for assemblies with assumed control rod insertion

Table 4.7.19
Reactivity Effect of Uncertainty in Inserts†

Condition	Reference k_{calc}	Density Increased by 20% Delta k_{calc}
IFBA	0.8862	-0.0002
WABA	0.8890	0.0010
CR	0.9230	0.0012
IFBA+WABA	0.8914	0.0005

† The uncertainty of the differences is around 0.0008 for all calculations

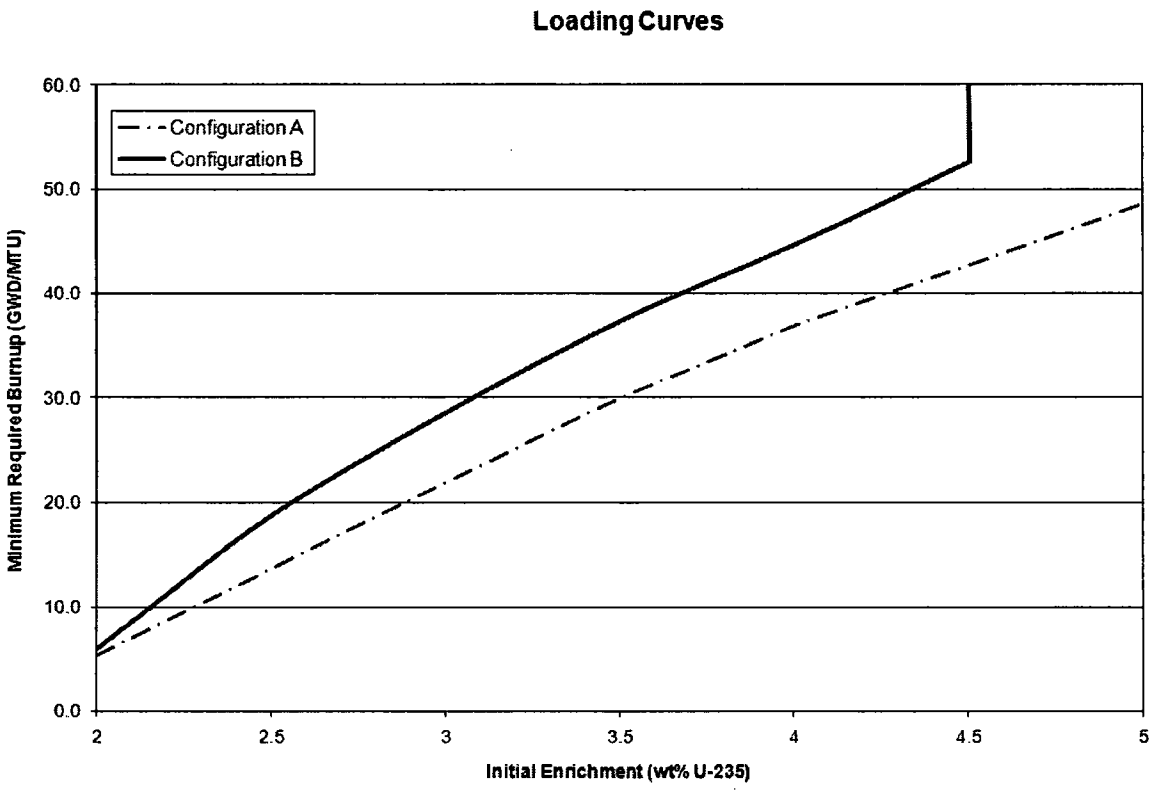

Figure 4.7.1: Minimum Required Burnup as a Function of Initial Enrichment, including 5% Burnup Record Uncertainty

4.8 Acceptability of Storing Indian Point Unit 3 Fuel in the Indian Point Unit 2 Pool

After the transfer of fuel in the STC is completed, fuel from Unit 3 is stored temporarily in the Unit 2 pool. This section evaluates the acceptability of this condition, and concludes that no further analyses are needed.

From a criticality perspective, the IP2 and IP3 fuel assemblies are essentially the same, and the in-core operating conditions are also very similar. IP3 fuel should therefore be qualified for storage in the IP2 spent fuel pool through the current design basis criticality analysis for the IP2 fuel in the IP2 pool. The following contains a more detailed comparison of the fuel and operating conditions and the details considered in the design basis analysis to conclude the above, and to identify any differences that could have an effect on the reactivity.

Design Basis Analysis (DBA)

The Design Basis Analysis (DBA) for the IP2 SFP is performed for fresh and spent 15x15 Westinghouse fuel with initial enrichments up to 5.0 wt% U-235. The DBA for the IP2 SFP is consistent with 10CFR50.68(b)(4) and determines that the reactivity of the spent fuel pool is less than 1.0 when flooded with pure water at the most reactive temperature and less than or equal to 0.95 when flooded with borated water at the most reactive temperature. The reactivity is determined at a 95/95 confidence interval and includes the reactivity effects of all applicable bias and bias uncertainties and tolerances. The SFP calculations consider both the partial loss and full loss of the Boraflex fixed neutron absorber in the storage racks. Spent fuel depletion calculations are conservatively calculated with a bounding moderator temperature and axial burnup profile, and the analysis considers the reactivity effect of integral and non-integral reactivity control devices (i.e. IFBA,WABA, and BPRA's). Additionally, the reactivity effect of accident conditions are considered at the 95/95 confidence interval with credit for soluble boron.

Comparison of IP2 and IP3 Fuel Designs

The fuel assembly types used at IP2 and IP3 are nearly identical Westinghouse 15x15 designs and include the OFA, LOPAR, HIPAR, VANTAGE 5, VANTAGE+, VANTAGE P+/V+, and Upgraded Fuel types. Table 4.8.1 shows a summary of the range of the parameters important to criticality and how they compare to the design basis analyses. The table shows only very minor differences between these various fuel types and these differences have an insignificant impact on reactivity.

Other important fuel assembly parameters are axial enrichment variations (axial blankets). Those are conservatively treated in the DBA as fully enriched along the entire active fuel length and need therefore not to be discussed here.

Spacer grids are not explicitly addressed in the DBA. So any differences in spacer grid material type, number and design fuel types are inconsequential with respect to the DBA. Note that spacer

grids are known to have only a small or even negative reactivity effect, specifically at fresh water conditions

In summary, fuel design are considered equivalent in terms of the DBA.

Core Operating Parameters

The operating parameters used in the IP2 DBA are shown in the Table 4.8.2. The table also provides information related to the operating parameters from both IP2 and IP3. Of the listed parameters, the moderator temperature is known to have the most significant impact on reactivity. As can be seen from the table, the moderator temperature used in the analysis bounds the core outlet temperature by a large margin. Note that the moderator temperature values presented for IP2 and IP3 are the maximum values over all cycles. The soluble boron concentrations presented for IP3 and IP2 are taken at the maximum value determined at HFP ARO at 0 burnup, and the average is taken as 50% of the maximum. The ranges over all cycles are presented. The comparison shows a slight difference in the soluble boron concentration, with a maximum average of 816 ppm for IP3 for a single cycle, whereas 750 ppm was used in the DBA. However, only a limited number of cycles have exceeded the value of 750 ppm used in the analyses, and when the average is calculated over 3 consecutive cycles, the maximum value for IP3 reduces to about 770 ppm. This reduces the difference to the DBA to 20 ppm, which would have a negligible effect on reactivity. The fuel temperature value used in the IP2 analysis was 1344 °F which is considered typical for both IP2 and IP3. For the reactor specific power, the range of values is presented for both units for both the minimum and maximum values over all cycles, and the DBA uses a value consistent with those ranges.

In summary, the IP2 DBA core operation parameters are representative for both the IP2 and IP3 fuel, with a very small difference in the soluble boron concentration.

Integral and Non-Integral Reactivity Control Devices

The IP2 DBA considers both integral (i.e. IFBA) and non-integral reactivity control devices (i.e. WABA):

- IFBA are credited for fresh fuel in Region 1 analyses.
- With respect to WABA, the maximum number of WABA rods is used in sensitivity calculations to determine a spent fuel reactivity bias of 0.01delta-k. This bias is accounted for in the determination of the soluble boron credit.

Devices used in the core designs are as follows:

- The IP2 core designs made use of the following reactivity control devices: full and part length RCCA's, BPRA (borosilicate glass/pyrex glass), WABA, and IFBA.

- The IP3 core designs made use of the following reactivity control devices: full and part length RCCA's, BPRA (borosilicate glass/pyrex glass), WABA, hafnium rods, and IFBA.

A comparison shows that the same devices were used in both units, except for hafnium inserts for flux suppression that were only used in IP3. Those inserts were only used in a limited number of assemblies at the periphery of the core. Further, they were only used for a burnup of up to about 6 GWd/MTU in each assembly. To account for the effect of those hafnium inserts in a conservative way, the burnup of the assemblies that were exposed to them should be reduced by the exposure with hafnium inserts before comparing the value to any burnup requirements for the IP2 pool. For example, and assembly with 40 GWD/MTU that had a hafnium insert for 5 GWD/MTU should be considered a 35 GWD/MTU for the purpose of placing it into the IP2 pool.

In summary, the IP2 DBA covers all IP3 assemblies in terms of reactivity control devices. For assemblies exposed to hafnium inserts, the burnup of the assembly needs to be reduced by the burnup for the presence of this insert.

Axial Burnup Profiles

The IP2 DBA analysis is based on a single profile developed for a certain core location. This is the center location of the core where the same assembly can be placed for consecutive cycles under a control bank in a "bite" position. The potential effect of this condition was evaluated in the DBA in terms of the axial profile and the isotopic composition of the fuel, and was conservatively considered for all fuel assemblies. This approach is also applicable to IP3, where center assemblies also have been placed for two consecutive cycles.

In summary, the DBA uses a conservative approach for axial burnup profiles that is equally applicable to both IP2 and IP3.

Summary

A comparison has been performed between the design basis criticality calculations for the IP2 spent fuel pool, and the corresponding parameters of the IP2 and IP3 fuel. The purpose of this comparison was to determine if those analyses for IP2 fuel in the IP2 pool would be equally applicable to IP3 fuel in the IP2 pool. This comparison concludes that the two units are nearly identical and that the IP2 DBA has inherent conservatisms that offset the minor differences between the units. Differences were found in the in-core soluble boron concentration in the analyses, which is slightly below the average value for some IP3 cycles. Some of the conservatisms that would offset any effect from those are the selection of the moderator temperatures, and the fact that axial blankets, which are known to reduce the calculated reactivity, are ignored in the DBA. Further, the IP2 analyses did not explicitly consider hafnium flux suppression inserts used in IP3, but this is compensated by a burnup adjustment for the affected assemblies. Overall, the IP2 DBA is therefore considered applicable to IP3 fuel, hence no additional analyses are considered necessary to store IP3 fuel in the IP2 pool.

Table 4.8.1
IP2 and IP3 Fuel Characteristics Compared to the IP2 Design Basis Analyses (DBA)

IP2 DBA		IP3 Range	IP2 Range
Rod array	15x15	15x15	15x15
Number of Guide Tubes	21	21	21
Rod-to-rod pitch, in.	0.563	0.563	0.563
Cladding Tube OD, in.	0.422	0.422	0.422
Cladding tube wall thickness, in.	0.0243	0.0243	0.0243
Pellet OD, in.	0.3659	0.3649-0.3659	0.3659-0.3669
Pellet Density, % theoretical	95.70	94.3-96.5	94.3-95.87
Active Length, in.	144	144	141.72-144
Guide Tube Thickness, in.	0.017	0.015-0.017	0.015-0.017

Table 4.8.2
IP2 and IP3 Core Operating Parameters Compared to the IP2 Design Basis Analyses (DBA)

IP2 DBA		IP3	IP2
T_{mod} (°F)	624	598 (max core outlet)	598 (max core outlet)
Soluble Boron (ppm)	750	1228-1632 (HFP BOC) 614 – 816 (Avg)	1186-1463 (HFP BOC) 593 – 732 (Avg)
Reactor Specific Power (W/g)	34.81	31.3-36.8	34.1-36.7

CHAPTER 5: THERMAL-HYDRAULIC EVALUATION

5.0 Overview

In this chapter the thermal-hydraulic adequacy of the Shielded Transfer Canister (STC) designed for onsite transfer of Indian Point Unit 3 (IP-3) fuel to the Indian Point Unit 2 (IP-2) is evaluated. The STC is a thick-walled vessel containing a fuel basket. The fuel basket design is similar to the Holtec Multi-Purpose Canisters (MPCs) deployed for storing fuel in the HI-STORM system [L.E] but substantially thicker in cross section to provide enhanced radiation protection. Up to twelve fuel assemblies can be accommodated in the STC fuel basket. For additional shielding the STC is emplaced in a HI-TRAC steel-lead-steel transfer cask having a thick bolted lid prior to on-site movement. To minimize fuel and cask temperatures the STC cavity, HI-TRAC annular space between STC and HI-TRAC, and the HI-TRAC water jacket are filled with water. Cutaway views of the STC and HI-TRAC transfer cask are depicted in Chapter 1, Figures 1.3.1 and 1.3.2. The transfer process is described in Chapter 1. The thermal analyses consider passive rejection of decay heat from the Spent Nuclear Fuel (SNF) to the environment. The following scenarios are evaluated:

i. Evaluation of normal onsite transfer of IP-3 fuel.
ii. A (non-mechanistic) postulated accident event resulting in the rupture of the HI-TRAC water jacket.
iii. A (non-mechanistic) postulated 50-gallon transporter gas tank rupture and fire accident.
iv. Simultaneous loss of water from the water jacket and HI-TRAC annulus accident.
v. Fuel misload accident.
vi. Hypothetical tipover accident.
vii. Crane malfunction accident.

The STC thermal design is required to comply with the temperature limits of SFST-ISG-11 [E.K] to ensure fuel integrity, and HI-STORM System temperature limits [L.E] to ensure cask integrity and vessel pressure limits. The thermal criteria are set forth in Chapter 3, Tables 3.1.1 and 3.2.1. The maximum permissible heat load is specified in Table 5.0.1.

Table 5.0.1

BOUNDING SHIELDED TRANSFER CASK THERMAL LOAD

PROPRIETARY TABLE REMOVED

Table 5.0.2

10CFR71 INSOLATION DATA

Surface Type	**12-Hour Insolation (W/m^2)**
Horizontally Transported Flat Surfaces	
- Base	None
- Other Surfaces	774.0
Non-Horizontal Flat Surfaces	193.5
Curved Surfaces	387.0

5.1 Thermal Design

The on-site fuel transfer equipment consists of the STC situated inside a vertically oriented HI-TRAC transfer cask. The HI-TRAC transfer cask is equipped with a thick bolted lid to maximize shielding and physical protection. The SNF assemblies reside inside the STC, which is closed by a bolted lid. In this manner the fuel placed in the STC is protected by two rugged boundaries. The STC contains a stainless-steel honeycomb fuel basket with square-shaped compartments of appropriate dimensions to allow insertion of the fuel assemblies. The fuel basket panels are equipped with neutron absorbing panels sandwiched between a stainless steel sheathing plate and the fuel basket panel, along the entire length of the active fuel region. The STC is water filled to emulate the wet storage environment in the IP-2 and IP-3 fuel pools. In this manner fuel temperature excursions during loading, transfer and unload-to-pool are minimized.

The water in the STC cavity plays an important role in the STC thermal performance. The water fills the spaces between solid components and provides an improved conduction medium (compared to gases) for dissipating decay heat. Within the STC the water environment sustains a closed loop thermosiphon action, removing SNF heat by an upward flow of water through the storage cells. Thermosiphon action is defined as buoyancy induced global circulation of water in the MPC. The thermosiphon action is pictorially illustrated in Figure 5.1.1. The STC is externally cooled by the water filled HI-TRAC annulus. The HI-TRAC annulus is cooled by the so-called "Rayleigh effect" defined as natural circulation in differentially heated cavities. The Rayleigh effect transports heat laterally across the HI-TRAC annulus. The heat reaching the HI-TRAC inner surface is transmitted laterally across the HI-TRAC steel-lead-steel body by conduction. The HI-TRAC annulus is equipped with an aluminum centering assembly (See Section 1.5) principally engineered to cushion the STC under a hypothetical tipover accident. As aluminum conductivity is substantially greater than water a high heat transfer path is concurrently active in the design. However, in the interest of conservatism aluminum heat dissipation is ignored in the thermal analysis when the HI-TRAC annulus is filled with water. The HI-TRAC body is water jacketed to provide neutron shielding. The water jacket dissipates heat from the HI-TRAC steel-lead-steel body by natural circulation of water in the jacket spaces. The HI-TRAC is externally cooled by radiation and natural convection heat dissipation to air.

An important thermal design criterion imposed on the STC is to limit the maximum fuel cladding temperature to within design basis limits (Chapter 3, Table 3.1.1). An equally important requirement is to minimize temperature gradients in the STC to minimize thermal stresses. In order to meet these design objectives, the STC basket is designed to possess certain distinctive characteristics, which are summarized in the following.

The STC design minimizes resistance to heat transfer within the basket and basket periphery regions. This is ensured by an uninterrupted panel-to-panel connectivity realized in the all-welded honeycomb basket structure. The STC design incorporates top and bottom plenums with interconnected downcomer paths. The top plenum is formed by the gap between the bottom of the STC lid and the top of the honeycomb fuel basket. The bottom plenum is formed by semicircular

holes at the base of all cell walls. The STC basket is designed to eliminate structural discontinuities (i.e., gaps) which introduce added thermal resistances to heat flow. Consequently, temperature gradients are minimized in the design, which results in lower thermal stresses within the basket. Low thermal stresses are also ensured by an STC design that permits unrestrained axial and radial growth of the basket.

5.1.1 Over-Pressure Protection

During fuel transfer operations the water inside the STC and HI-TRAC expands under heatup to normal operating temperatures. To protect the vessels from excessive hydraulic pressures an air space is provided under the HI-TRAC lid and a steam filled space is provided under the STC lid. The minimum heights of the open spaces are defined below:

STC Lid: [PROPRIETARY TEXT REMOVED]
HI-TRAC Lid: [PROPRIETARY TEXT REMOVED]

The provision of a steam filled space under the STC lid renders the STC pressure independent of the space height. This is because the STC pressure is essentially equal to the vapor pressure co-incident with the STC water surface temperature. In this manner the space in the top plenum is rendered non-limiting in establishing the internal pressure of the STC. This also mitigates the need to control STC water level with a high level of accuracy.

The water level under the STC lid is operationally maintained at the appropriate level using a fixed length drain tube. A pressurized source of steam is connected to the vent connection and the drain connection is routed to a collection system suitable for liquid rad waste. The steam flows through the vent connection and forces water out through the drain tube. Upon reaching the bottom of the drain tube, the steam bypasses the water and flows out of the drain tube. In this manner the water level inside the canister stays at the bottom of the drain tube as it is physically impossible to drive water out of the drain line below the drain tube. It is not possible to drive water out of the STC to a level below the drain tube because once the water level falls below the tube, the steam will bypass the water and flow out the drain line. Furthermore the transition from water to steam flowing out of the discharge line assures the operator that water in the STC is at the appropriate level. To provide a defense-in-depth, the volume of water removed from the STC must be $\geq$ 35.4 gallons and $\leq$ 47.9 gallons to achieve acceptable water level inside the STC. The thermal analysis for normal conditions supports an initial vapor space of [PROPRIETARY TEXT REMOVED]. Therefore, the requirement for the initial height of the vapor space in the STC is [PROPRIETARY TEXT REMOVED].

For establishment of the required minimum air space in the HI-TRAC annulus, a direct visual measurement is required prior to placement of the HI-TRAC top lid. This measurement shall be verified prior to installation of the lid. However, if a deviation is assumed for defense-in-depth, as shown below the pressure remains within design limits. Table 5.1.1 provides the results of parametric variation on the air space height assuming hypothetical large deviations. As observed from this table even under a hypothetical [PROPRIETARY TEXT REMOVED] reduction in the HI-

TRAC air space height the cavity pressure remains below design limits. The requirement for the water level in the HI-TRAC will be verified visually to be at the within 1 inch below the top of the STC lid.

Table 5.1.1

EFFECT OF REDUCED AIR SPACE HEIGHT ON THE HI-TRAC INTERNAL PRESSURE

PROPRIETARY TABLE REMOVED

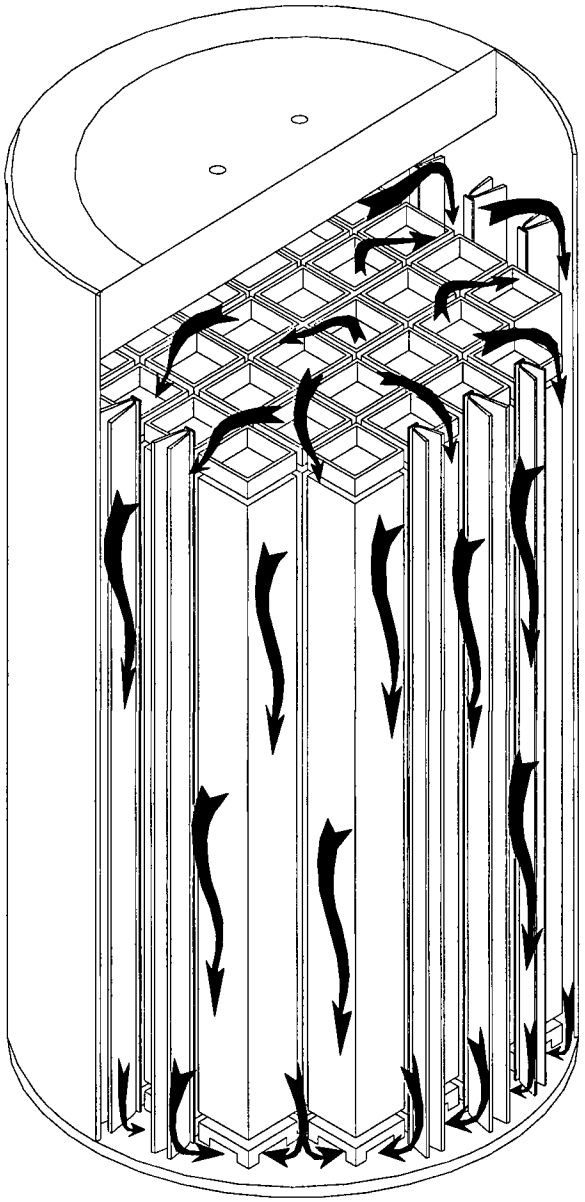

FIGURE 5.1.1: ILLUSTRATION OF FUEL BASKET COOLING BY THERMOSIPHON ACTION

5.2 Thermal Properties of Materials

Materials present in the STC are Zircaloy, fuel (UO_2), carbon steel, stainless steel, METAMIC neutron absorber, lead, steam and water. Materials present in the HI-TRAC transfer cask are carbon steel, lead, air, water and aluminum (HI-TRAC annulus). In Table 5.2.1, a summary of references used to obtain cask material properties for performing all thermal analyses is presented.

Tables 5.2.2, 5.2.3, 5.2.9 and 5.2.10 provide thermal conductivity of materials at several representative temperatures. Conductivity of METAMIC is provided in Table 5.2.8. Emissivity of key materials are provided in Table 5.2.4. The emissivity properties of painted external surfaces are generally excellent. Kern [R.E] reports an emissivity range of 0.8 to 0.98 for a wide variety of paints. In the STC thermal analysis, an emissivity of 0.85* is applied to painted surfaces.

In Table 5.2.5, the heat capacity and density of the STC and HI-TRAC transfer cask materials are presented. The temperature-dependent viscosity of air and water is provided in Table 5.2.6. Steam thermal properties are provided in Table 5.2.9.

[PROPRIETARY TEXT REMOVED]

* This is conservative with respect to prior cask industry practice, which has historically utilized higher emissivities [R.O].

Table 5.2.1

THERMO-PHYSICAL PROPERTY REFERENCES

Material	Emissivity	Conductivity	Density	Heat Capacity
Air	N/A	Handbook [R.B]	Ideal Gas Law	Handbook [R.B]
Zircaloy	[R.C], [R.P], [R.Q], [R.G]	NUREG [R.F]	Rust [R.D]	Rust [R.D]
UO_2	Note 1	NUREG [R.F]	Rust [R.D]	Rust [R.D]
Stainless Steel (machined forgings)*	Kern [R.E]	ASME [R.H]	Marks' [R.A]	Marks' [R.A]
Stainless Steel Plates†	ORNL [R.K], [R.L]	ASME [R.H]	Marks' [R.A]	Marks' [R.A]
Carbon Steel	Kern [R.E]	ASME [R.H]	Marks' [R.A]	Marks' [R.A]
Lead	Note 1	Handbook [R.B]	Handbook [R.B]	Handbook [R.B]
Water	Kern [R.E]Note 2	ASME [R.J]	ASME [R.J]	ASME [R.J]
METAMIC	Note 1	Test Data [R.M], [R.N]	Test Data [R.M], [R.N]	Test Data [R.M], [R.N]
Steam	N/A	[R.T]	[R.T]	[R.T]
Aluminum	Incropera [R.T]	ASME [R.H]	ASME [R.H]	ASME [R.H]

Note 1: Emissivity not reported as radiation heat dissipation from these surfaces is conservatively neglected.

Note 2: Water is opaque to thermal radiation. Emissivity of water to determine the radiation heat transfer is credited only in calculation of the effective thermal conductivity of steam space inside the STC and air space between the STC lid and the HI-TRAC lid.

* Used in the STC lid.

† Used in the basket panels, neutron absorber sheathing, STC shell and baseplate.

Table 5.2.2

MATERIALS THERMAL CONDUCTIVITY DATA

Material	**At 100°F (Btu/ft-hr-°F)**	**At 200°F (Btu/ft-hr-°F)**	**At 450°F (Btu/ft-hr-°F)**	**At 700°F (Btu/ft-hr-°F)**
Air	0.0153	0.0173	0.0225	0.0272
Stainless Steel	7.9	8.4	9.8	11.0
Carbon Steel	23.9	24.4	23.9	22.4
Lead	19.9	19.4	17.9	16.9
Water	0.363	0.392	0.368	N/A

Table 5.2.3

FUEL ASSEMBLY MATERIALS THERMAL CONDUCTIVITY DATA

Zircaloy Cladding*		**Fuel (UO_2)**	
Temperature (°F)	Conductivity (Btu/ft-hr-°F)	Temperature (°F)	Conductivity (Btu/ft-hr-°F)
392	8.28	100	3.48
572	8.76	448	3.48
752	9.60	570	3.24
932	10.44	793	2.28

* Conductivities of other zirconium based cladding materials such as Zirlo are well approximated by Zircaloy because the principal alloying element is the same.

Table 5.2.4

SURFACE EMISSIVITY DATA*

Material	Emissivity
Zircaloy	0.80
Painted surfaces	0.85
Stainless steel (machined forgings)	0.36
Stainless Steel Plates	0.587**
Carbon Steel	0.66
Water	0.96***
Aluminum	0.2

* See Table 5.2.1 for cited references.

** Lowerbound value from the cited references in Table 5.2.1.

*** Emissivity of water is used only in the calculation of effective thermal conductivities of air and steam spaces in the HI-TRAC and STC respectively.

Table 5.2.5

DENSITY AND HEAT CAPACITY DATA

Material	Density (lbm/ft^3)		Heat Capacity (Btu/lbm-°F)
Zircaloy	409		0.0728
Fuel (UO_2)	684		0.056
Carbon steel	489		0.1
Stainless steel	501		0.12
Lead	710		0.031
Water	@ 100.0°F	62.0	0.999
	@ 170.3°F	60.8	
	@ 260.3 °F	58.5	
	@ 350.3 °F	55.6	
	@ 440.3 °F	51.9	
METAMIC	163.4**		0.22**
Aluminum	169.3		0.23
Air	Ideal Gas		0.24

** Lowerbound values reported for conservatism.

Table 5.2.6

VISCOSITY VARIATION WITH TEMPERATURE

Temperature (°F)	**Air Viscosity* (Micropoise)**	**Temperature (°F)**	**Water Viscosity** (Micropoise)**
32.0	172.0	100	681.3
70.5	182.4	200	303.6
260.3	229.4	450	114.4
338.4	246.3	-	-
567.1	293.0	-	-
701.6	316.7	-	-
1078.2	377.6	-	-

* Obtained from Rohsenow and Hartnett [R.B].

** Obtained from ASME Steam Tables [R.J].

Table 5.2.7

VARIATION OF NATURAL CONVECTION PROPERTIES

PARAMETER "Z" FOR AIR WITH TEMPERATURE

Temperature (°F)	**Z ($ft^{-3}°F^{-1}$)***
40	2.1×10^{6}
140	9.0×10^{5}
240	4.6×10^{5}
340	2.6×10^{5}
440	1.5×10^{5}
* Obtained from Jakob and Hawkins [R.I]	

Table 5.2.8

METAMIC CONDUCTIVITY DATA (33 wt.% B_4C)*

[PROPRIETARY TABLE REMOVED]

Table 5.2.9

THERMAL PROPERTIES OF STEAM

Temperature (°F)	Density (lb/ft^3)	Heat Capacity (Btu/lb-°F)	Thermal Conductivity (Btu/ft-hr-°F)
80.6	0.0016	0.4471	0.0113
170.6	0.0162	0.4667	0.0133
260.6	0.0854	0.5155	0.0157
350.6	0.3001	0.6115	0.0191
440.6	0.8150	0.7811	0.0244
620.3	4.5568	2.09	0.0537
Note: Steam properties at 1 atm nominal pressure are tabulated herein.			

Table 5.2.10

THERMAL CONDUCTIVITY OF ALUMINUM 6061

Temperature (°F)	Thermal Conductivity (Btu/ft-hr-°F)
100	96.9
200	99.0
300	100.6

* For conservatism the B_4C content is overstated.

5.3 Thermal Evaluation of Fuel Transfer Operation*

The STC basket is designed to accommodate up to twelve W-15x15† IP-3 fuel assemblies. The fuel basket is a matrix of interconnected square compartments designed to hold the fuel assemblies in a vertical position during fuel transfer. The basket is a honeycomb structure of stainless steel plates with full-length edge-welded intersections to form an integral basket configuration. The cell walls are equipped with neutron absorber plates sandwiched between the box wall and a stainless steel sheathing plate over the full length of the active fuel region. The neutron absorber plates are made of aluminum and boron carbide-containing METAMIC Metal-Matrix-Composite material to provide criticality control, while maximizing heat conduction capabilities.

Thermal analysis of the STC is performed under the bounding heat load scenario defined in Table 5.0.1 wherein all fuel assemblies are assumed to be generating heat at the maximum permissible rate. While the assumption of limiting heat generation in each storage cell imputes a certain symmetry to the cask thermal analysis, it grossly overstates the total heat duty because it is unlikely that a fuel basket would be loaded with all fuel assemblies emitting heat at their limiting values. The principal attributes of the thermal model are described in the following:

i. Heat generation in the STC is axially non-uniform with peaking in the mid-section of the active fuel length.
ii. In as much as the transfer of heat occurs from inside the basket region to the outside, the temperature field in the STC is spatially distributed with the maximum values reached in the central core region.
iii. [PROPRIETARY TEXT REMOVED]
iv. Heat is dissipated from the external surfaces of the cask by radiation and natural convection to air.
v. [PROPRIETARY TEXT REMOVED]

5.3.1 Description of the 3-D Thermal Model

i. Introduction

The STC interior is a 3-D array of square shaped cells inside an irregularly shaped basket outline confined inside the cylindrical space of the STC cavity. To ensure an adequate representation of these features, a 3-D geometric model of the STC is constructed using the FLUENT Computational Fluid Dynamics (CFD) code pre-processor [M.E]. Other than representing the composite cell walls (made up of stainless steel panels, neutron absorber panels and stainless steel sheathing) by a homogeneous panel with equivalent orthotropic (thru-thickness and parallel plates direction) thermal conductivities, the 3-D model requires no idealizations of the fuel basket structure. Further, since as it is impractical to model every fuel rod in every stored fuel assembly explicitly, the cross section

* The thermal evaluation reported herein is supported by thermal calculation report [L.H].
† 15x15 array Westinghouse fuel assemblies.

bounded by the inside of the storage cell, which surrounds the assemblage of fuel rods and the interstitial water (also called the "rodded region"), is replaced with an "equivalent" square homogeneous section characterized by an effective thermal conductivity. Homogenization of the storage cell cross-section is illustrated in Figure 5.3.1. For thermal-hydraulic simulation, each fuel assembly in its storage cell is represented by an equivalent porous medium.

ii. Details of the 3-D Model

The 3-D model implemented has the following key attributes:

[PROPRIETARY TEXT REMOVED]

5.3.2 Maximum Temperatures

The 3-D model articulated in the previous subsection is used to determine temperature distributions under transfer of IP-3 fuel placed in the STC. The fuel transfer scenario assumes maximum permissible fuel heat load, hot ambient temperature (See Table 5.0.1), insolation heating and steady-maximum temperatures. [PROPRIETARY TEXT REMOVED]
The results of the analysis are tabulated in Tables 5.3.1 and 5.3.2. The following observations are derived by inspecting the temperature field obtained from the thermal models:

- The fuel cladding temperatures are within the SFST-ISG-11 limits (Table 3.1.1).
- The maximum temperature of the basket structural materials are within their design limits (Table 3.1.1).
- The maximum temperature of the neutron absorbers are within their design limits (Table 3.1.1).
- The maximum temperatures of the STC pressure boundary materials are within their design limits (Table 3.1.1).
- The maximum STC, HI-TRAC annulus and water jacket pressures are within design limits (See Tables 3.2.1).

The above observations leads to the conclusion that the temperature field in the STC containing heat emitting IP-3 fuel provides a safe environment for stored fuel. The component temperatures and pressure boundary pressures are in compliance with thermal design criteria set forth in Chapter 3.

The STC and the HI-TRAC are in multiple configurations during the loading of the STC into the HI-TRAC during normal on-site transfer operations as described in Chapter 10. The temperatures and pressures reported in Tables 5.3.1 and 5.3.2 bound the following loading configurations:

1. Loaded STC without the STC lid being sealed in the HI-TRAC.
2. Loaded STC with the STC lid sealed in the HI-TRAC without the HI-TRAC lid.

The above without lid loading scenarios are not limiting because lids place additional resistances to dissipation of heat.

5.3.3 Evaluation of STC without the HI-TRAC

An evaluation of the STC component temperatures was performed under a postulated situation wherein the STC is assumed to be suspended in air above the spent fuel pool for a substantial duration. The evaluation assumes the following:

[PROPRIETARY TEXT REMOVED]

The evaluation shows that the average outer surface temperature of the STC without the HI-TRAC is 83°C (181°F). During on-site transfer operations, the average outer surface of STC placed within the HI-TRAC is 91°C (196°F). The bare (no HI-TRAC) STC components and cavity temperatures will, therefore, be lower than those reported in Table 5.3.1. This scenario bounds the following loading configurations:

1. Loaded STC with and without the STC lid.
2. Loaded STC without the STC lid being sealed in Fuel Storage Building (FSB) between the spent fuel pool and the HI-TRAC.

5.3.4 Detection of Fuel Misload

To provide an additional layer of assurance that the thermal payload of the STC is within design limits* a fuel misload detection test must be conducted prior to inter-unit fuel transfer operations. The test is conducted with the loaded and sealed STC placed in the HI-TRAC inside the fuel storage building. The misload test requires the pressure inside the STC to be monitored for a minimum duration of 24 hours after the STC lid is torqued, the open space above water is filled with steam and STC lid vent valve is closed. Pressure monitoring is adopted to conduct the fuel misload test because the vapor pressure of water rises sharply with temperature thereby providing a sensitive means to detect gross fuel misloads.

[PROPRIETARY TEXT REMOVED]

The transient is computed using the FLUENT thermal model defined in Section 5.3.1 and the STC

* Thermal payload of the STC is ensured by conducting Tech. Spec. compliant fuel loading operations controlled by approved plant procedures and verified operational steps.

pressure rise computed. The 48-hour STC pressure rise under design basis heat load is graphed in Figure 5.3.2. The STC pressure rise is computed as the increase in STC pressure against the initial STC pressure (at t=0). The rate of change of STC pressure with time for design basis heat is graphed in Figure 5.3.4. From the figure, the maximum permissible rate of change of STC pressure is determined and is reported in Table 5.3.3. Figure 5.3.4 shows that a rate of change of STC pressure specified in Table 5.3.3 can be used to differentiate between a design basis heat load and a severe misload shortly after commencement of the STC pressure rise surveillance. To permit fuel transfer operations, the hourly measured STC pressure rise ΔP_T, averaged over a rolling 4 hour period, must remain below the maximum permissible pressure change defined in Table 5.3.3. Exceedance of the maximum permissible pressure rise indicates a fuel misload condition that will mandate opening of the STC lid vent valve to prevent vessel over pressurization, the STC to be returned to the SFP, fuel unloaded and a programmatic assessment of root cause established. [PROPRIETARY TEXT REMOVED]

[PROPRIETARY TEXT REMOVED]

The fuel misload detection test discussed in the previous paragraph is verified by assuming a hypothetical severe fuel misload of a worst fuel assembly in the STC. [PROPRIETARY TEXT REMOVED] All the other fuel storage locations in the fuel basket are assumed to be loaded with design basis maximum permissible heat load (Table 5.0.1). [PROPRIETARY TEXT REMOVED] A fuel misload is assumed to occur when the rate of change in STC pressure is higher than the maximum permissible rate of change of pressure defined in Table 5.3.3. The comparison of STC pressure rise under the severe fuel misload accident and normal condition (design basis heat load) is shown in Figure 5.3.3 for the first 8 hours after loading. The rate of change of STC pressure with time for the severe fuel misload case is shown in Figure 5.3.4. Since the pressure rise in the STC for the accident condition will exceed the maximum permissible limit specified in Table 5.3.3, appropriate actions defined in Chapter 10 are implemented.

Table 5.3.1

MAXIMUM TEMPERATURES UNDER FUEL TRANSFER

[PROPRIETARY TABLE REMOVED]

Table 5.3.2

MAXIMUM PRESSURES UNDER FUEL TRANSFER

[PROPRIETARY TABLE REMOVED]

Table 5.3.3

MAXIMUM RATE OF CHANGE OF STC PRESSURE UNDER DESIGN BASIS HEAT

PROPRIETARY TABLE REMOVED

FIGURE 5.3.1: HOMOGENIZATION OF THE STORAGE CELL CROSS-SECTION

[PROPRIETARY FIGURE REMOVED]

FIGURE 5.3.2: 48-HOUR STC PRESSURE RISE UNDER DESIGN BASIS HEAT LOAD

[PROPRIETARY FIGURE REMOVED]

FIGURE 5.3.3: COMPARISON OF STC PRESSURE RISE UNDER DESIGN BASIS HEAT LOAD AND UNDER A SEVERE FUEL MISLOAD ACCIDENT

[PROPRIETARY FIGURE REMOVED]

Figure 5.3.4: COMPARISON OF RATE OF CHANGE OF STC PRESSURE WITH TIME

[PROPRIETARY FIGURE REMOVED]

5.4 Hypothetical Accident Evaluation*

To demonstrate the robustness of the STC fuel transfer operation severe accidents are postulated and evaluated herein. The accidents are defined as follows:

i. Postulated rupture of the HI-TRAC water jacket.
ii. Postulated 50-gallon transporter gas tank rupture and fire accident.
iii. Simultaneous loss of water from the water jacket and HI-TRAC annulus accident.
iv. Fuel misload accident.
v. Hypothetical tipover accident.
vi. Crane malfunction accident.

To ensure fuel, STC and HI-TRAC integrity the following criteria must be demonstrated:

- The fuel cladding must remain below the SFST-ISG-11 temperature limit.
- The STC vessel temperature and pressure must remain below accident limits.
- HI-TRAC pressure boundary temperature and pressure must remain below accident limits.

The accidents are evaluated in Sections 5.4.1 through 5.4.6.

5.4.1 Jacket Water Loss Accident

The integrity of fuel cladding and STC pressure boundary integrity is evaluated under a postulated rupture and loss of water from the HI-TRAC water jacket. The HI-TRAC is equipped with an array of water compartments filled with water. For a bounding analysis, all water jacket compartments are assumed to be drained of water and replaced with air. [PROPRIETARY TEXT REMOVED] Under this array of adverse conditions, the maximum temperatures and pressures are computed and reported in Tables 5.4.1 and 5.4.2. The results of jacket water loss evaluation confirm that the cladding, STC and HI-TRAC component temperatures are below design limits and the co-incident STC and HI-TRAC pressures are bounded by the vessel accident pressure limits (Table 3.2.1).

5.4.2 Fire Accident

Although the probability of a fire accident during fuel transfer operations is low, a conservative fire event has been assumed and analyzed. Entergy will implement administrative controls prior to each inter-unit transfer campaign to ensure there are no permanent or transient sources of fire in the vicinity of the transport path that create a condition outside the fire analysis and design basis of the HI-TRAC/STC assemblage. The fire event is defined as rupture of an on-site transport vehicle fuel tank filled to capacity and ignition of spilled fuel. The fuel tank capacity is limited to 50 gallons. The fuel tank fire is conservatively assumed to surround the HI-TRAC in the manner described in Item 3 below. All exposed transfer cask surfaces are heated by radiation and convection heat transfer from the fire. Although not mandated by 10 CFR 50 Regulations, the NUREG-1536 and 10

* The thermal evaluation reported herein is supported by thermal calculation report [L.H].

CFR 71 guidance is adopted to conservatively bound the consequences of the postulated fire event. The fire parameters from the cited references are defined below:

1. The average flame emissivity is at least 0.9 and the cask absorbtivity at least 0.8.

2. The average flame temperature must be at least 1475°F (802°C). Open pool fires typically involve the entrainment of large amounts of air, resulting in lower flame temperatures. Additionally, the bounding temperature is applied to all exposed cask surfaces, which is very conservative considering the size of the transfer cask. It is therefore conservative to use the 1475°F (802°C) temperature.

3. The fuel source must extend horizontally at least 1 m (40 in), but may not extend more than 3 m (10 ft) beyond the external surface of the cask. Use of the minimum ring width of 1 meter yields a deeper pool thereby conservatively maximizing the fire duration.

4. The convection coefficient must be that value which may be demonstrated to exist if the cask were exposed to the fire specified. Based on Sandia large pool fire thermal measurements [R.R], a forced convection heat transfer coefficient of 4.5 Btu/(hr×ft^2×°F) is applied to the exposed transfer cask surfaces during fire.

Based on the limiting 50 gallon fuel volume, the transfer cask diameter (7.4 ft) and the lowerbound 1 m fuel ring width, a fuel depth of [PROPRIETARY TEXT REMOVED] is obtained. From this depth and lowerbound fuel consumption rate of 0.15 in/min, the fire duration is calculated to be 4.85 minutes. The fuel consumption rate of 0.15 in/min is the lowerbound value from Sandia large pool fire tests [R.R]. Use of a lowerbound fuel consumption rate conservatively maximizes the fire duration.

Based on the fire parameters defined by items 1 through 4 above the heat input to the HI-TRAC transfer cask is computed as follows:

$$q_F = h_{fc}(T_F - T_S) + \sigma\alpha\varepsilon[(T_F + C)^4 - (T_S + C)^4]$$

where:

q_F = Cask Heat Flux (Btu/ft^2-hr)
h_{fc} = Forced Convection Heat Transfer Coefficient (4.5 Btu/ft^2-hr-°F)
σ = Stefan-Boltzmann Constant
T_F = Fire Temperature (1475°F)
C= Conversion Constant (460 (°F to °R))
T_S = Cask Surface Temperature (°F)
ε = Flame Emissivity (0.90)
α = Cask Absorbtivity (0.8)

From the HI-TRAC fire analysis, a bounding rate of temperature rise ([PROPRIETARY TEXT REMOVED]) is determined. The total temperature rise computed as the product of the rate of

temperature rise and fire duration is [PROPRIETARY TEXT REMOVED] . Applying this bounding temperature rise the temperature of the fuel and STC are obtained. The results are reported in Table 5.4.3. The coincident boundary pressures are computed and reported in Table 5.4.4. The following observations are derived from the fire accident results:

- The fuel cladding temperature is within the SFST-ISG-11 limits (Table 3.1.1).
- The maximum temperatures of the basket structural materials are within design limits (Table 3.1.1).
- The maximum temperature of the METAMIC neutron absorber is within design limits (Table 3.1.1).
- The maximum temperatures of the STC pressure boundary materials are within design limits (Table 3.1.1).
- The maximum STC and HI-TRAC pressures are within design limits (Table 3.2.1).

5.4.2.1 Evaluation of HI-TRAC water jacket and seals

Under a hypothetical fire accident the exposed surfaces of the HI-TRAC and water jacket are likely to experience large temperature excursions. Under this scenario loss of water from the water jacket through safety relief is not precluded. Loss of jacket water during a fire is not an adverse condition as the lower conductivity of water vapor and/or air replacing it reduces fire heat transmission. During post-fire the temperatures are bounded by the water jacket accident evaluated in Section 5.4.1. The HI-TRAC top lid seals are protected by the thick HI-TRAC lid from direct fire exposure. However, a hypothetical weakening of the seals under post-fire temperature excursions may yield some venting of water vapor and air*. The bottom pool lid seals are well protected by their proximity to a large inventory of annulus water. The annulus water limits temperatures to a low value corresponding to the boiling temperature of water. Accordingly annulus water under a fire accident is retained.

5.4.3 Simultaneous loss of water from the HI-TRAC water jacket and HI-TRAC annulus

The integrity of fuel cladding and STC pressure boundary integrity is evaluated under a postulated simultaneous loss of water from the water jacket and HI-TRAC annulus. The HI-TRAC is equipped with an array of water compartments filled with water. For a conservatively bounding analysis, all water jacket compartments and the HI-TRAC annulus are assumed to be drained of water and replaced with air. The HI-TRAC is assumed to have the maximum thermal payload (Table 5.0.1) and

* The dose consequence of annulus air and water vapor venting is minimal because the fuel containing STC boundary integrity is not affected.

assumed to have reached steady state maximum temperatures. Under this array of adverse conditions, the maximum temperatures and pressures are computed and reported in Tables 5.4.5 and 5.4.6. The results show that the cladding, STC and HI-TRAC component temperatures remain below design limits and the co-incident STC pressure is bounded by the vessel accident pressure limit.

To evaluate the potential effect of HI-TRAC/STC centering assemblies within the HI-TRAC annulus, a different thermal model is constructed that explicitly includes all the aluminum centering assemblies in the HI-TRAC annulus. [PROPRIETARY TEXT REMOVED]Under the adverse conditions, the maximum temperatures and pressures are computed and reported in Tables 5.4.5 and 5.4.6 respectively. The effect of including the centering assemblies on temperatures and pressure is small compared to the safety margins in the model. The results show that the cladding, STC and HI-TRAC component temperatures remain below design limits and the co-incident STC pressure is bounded by the vessel accident pressure limit.

5.4.4 Fuel Misload Accident

To provide assurance that the STC integrity is not challenged a hypothetical misload event is defined wherein every storage location [PROPRIETARY TEXT REMOVED]. The misload event is evaluated with the STC placed in the HI-TRAC, the STC lid vent valve closed and assuming maximum steady state temperatures and co-incident pressures are reached*. Under this array of adverse conditions, the maximum temperatures and pressures are computed and reported in Tables 5.4.7 and 5.4.8. The results show that the cladding, STC and HI-TRAC component temperatures under this adverse fuel misload condition remain below design limits and the co-incident STC pressure is bounded by the vessel accident pressure limit.

5.4.5 Hypothetical Tipover Accident

The tipover accident is defined in the Design Criteria Chapter 3 as a non-mechanistic event to demonstrate structural robustness of the STC. This event is adopted in this chapter to evaluate the thermal design of the STC to provide protection of the loaded fuel. For conservatism the following assumptions are incorporated in the analysis:

[PROPRIETARY TEXT REMOVED]

Under the adverse assumptions above, the maximum temperatures and pressures are computed and reported in Tables 5.4.9 and 5.4.10. The results show that the cladding, STC and HI-TRAC component temperatures remain below design limits (Table 3.1.1) and the co-incident STC and HI-TRAC pressures are bounded by the accident pressure limits (Table 3.2.1).

---

* The assumption of maximum steady state temperatures is conservative because the STC is required to be tested to detect fuel misloads (See Section 5.3.4) and returned to the pool if the test criteria is violated.

5.4.6 Crane Malfunction Accident

The crane malfunction accident is postulated as an extreme event wherein the IP3 crane stops operation for an extended duration co-incident with a fuel misload error while the STC is hanging above the pool. The co-incident fuel misloading is defined as a condition wherein all fuel storage locations are loaded with fuel generating two times the maximum permitted heat load. Under this scenario the STC is assumed to be initially flooded with 100°F pool water. This assumption reasonably bounds pool water temperature during post-outage fuel loading operations. As an additional measure of conservatism the STC is assumed to be insulated and the water subjected to adiabatic heating.

A significant pressure rise under the postulated crane malfunction event is not credible because the STC lid vent is open to atmosphere and the lid is positioned unbolted above the STC with a small gap. However, to avoid boiling and loss of water inventory the minimum available time to implement corrective actions prior to the STC reaching boiling temperature is computed and given below:

[PROPRIETARY TEXT REMOVED]

The above evaluation provides reasonable assurance that plant operator has adequate margins to correct crane malfunction or implement steps to manually lower the STC into the pool.

Table 5.4.1

JACKET WATER LOSS ACCIDENT TEMPERATURES

[PROPRIETARY TABLE REMOVED]

Table 5.4.2

JACKET WATER LOSS CAVITY PRESSURES

[PROPRIETARY TABLE REMOVED]

Table 5.4.3

FIRE ACCIDENT TEMPERATURES

[PROPRIETARY TABLE REMOVED]

Table 5.4.4

FIRE ACCIDENT CAVITY PRESSURES

[PROPRIETARY TABLE REMOVED]

Table 5.4.5

SIMULTANEOUS HI-TRAC ANNULUS AND JACKET WATER LOSS ACCIDENT TEMPERATURES

[PROPRIETARY TABLE REMOVED]

Table 5.4.6

SIMULTANEOUS HI-TRAC ANNULUS AND JACKET WATER LOSS ACCIDENT PRESSURES

[PROPRIETARY TABLE REMOVED]

Table 5.4.7

FUEL MISLOAD ACCIDENT TEMPERATURES
[PROPRIETARY TABLE REMOVED]

Table 5.4.8

FUEL MISLOAD ACCIDENT PRESSURES
[PROPRIETARY TABLE REMOVED]

Table 5.4.9

HYPOTHETICAL TIPOVER ACCIDENT TEMPERATURES
[PROPRIETARY TABLE REMOVED]

Table 5.4.10

HYPOTHETICAL TIPOVER ACCIDENT PRESSURES
[PROPRIETARY TABLE REMOVED]

CHAPTER 6: STRUCTURAL EVALUATION OF NORMAL AND ACCIDENT CONDITION LOADINGS

6.0 Overview

In this chapter, the structural components of the Shielded Transfer Canister (STC) are identified and described. The objective of structural analyses is to ensure that the integrity of the STC and HI-TRAC is maintained under design, normal, and accident conditions, including extreme environmental phenomena such as flood, earthquake, and tornado wind as defined in Subsection 3.2.3. There are no off-normal events defined in this LAR that adversely affect the structural performance of the STC or HI-TRAC. The results of the structural analyses, summarized in this chapter, support the conclusion that the STC and the HI-TRAC meet the structural design criteria set forth in Chapter 3. To facilitate regulatory review, the assumptions and conservatisms inherent in the analyses are identified along with a concise description of the analytical methods, models, and acceptance criteria.

6.1 Structural Design

6.1.1 Discussion

The STC consists of a fuel basket inside a thick-walled cylindrical vessel (Figure 1.3.1). The HI-TRAC transfer cask is an existing piece of equipment at IP-2, which is licensed under NRC docket 72-1014 as part of the HI-STORM 100 Dry Cask Storage System. The HI-TRAC with its specially designed closure lid is shown in Figure 1.3.2. A complete description of the design details of the STC and the HI-TRAC is provided in Section 1.3. In this section, the discussion is confined to characterizing the design features of the STC and the HI-TRAC transfer cask relevant to their structural analysis.

6.1.1.1 Shielded Transfer Canister (STC)

PROPRIETARY TEXT REMOVED

As stated in Chapter 3, the STC is designed to meet ASME Code, Section III, Subsection ND stress limits. Table 6.1.6 lists the alternatives to the ASME Code for the STC and the justification for those alternatives.

6.1.1.2 HI-TRAC 100D Transfer Cask

PROPRIETARY TEXT REMOVED

The structural steel components of the HI-TRAC pressure boundary are subject to the stress limits of the ASME Code, Section III, Subsection ND, Class 3 for normal and accident loading conditions. The stress limits, for the HI-TRAC closure lid lifting, are conservatively set to follow guidelines from NUREG-0612 and Regulatory Guide 3.61 [D.B].

6.1.2 Design Criteria and Applicable Loads

Principal design criteria for the design basis, normal condition, and accident condition loads are discussed in Section 3.2. In this section, the loads, load combinations, and the required structural performance of the STC and the HI-TRAC under the various loading events are presented.

Stresses arise in the components of the STC and the HI-TRAC due to various loads that originate under design, normal, or accident conditions. These individual loads are combined to form load combinations. Stresses, strains, displacements, and stress intensities, as applicable, resulting from the load combinations are compared to their respective allowable limits. The following subsections present loads, load combinations,

HOLTEC INTERNATIONAL COPYRIGHTED MATERIAL

and the allowable limits germane to them for use in the structural analyses of the STC and the HI-TRAC transfer cask.

6.1.2.1 Loads and Load Combinations

The individual loads applicable to the STC and the HI-TRAC cask are defined in Section 3.2 of this report. Load combinations are developed by assembling the individual loads that may act concurrently, and possibly, synergistically. The load combinations, which are summarized in Table 3.2.4, are applied to the mathematical models of the STC and the HI-TRAC. Results of the analyses carried out under bounding load combinations are compared with their respective allowable limits in Subsection 6.1.2.2. The analysis results from the bounding load combinations are also evaluated to ensure satisfaction of the functional performance criteria discussed in the foregoing.

6.1.2.2 Materials and Allowables

The major load bearing members (viz. the STC shells) of the STC are built from SA-516 Gr. 70 or equivalent material. The closure lid, the baseplate and the upper flange are built from SA 350 LF2. The STC trunnions are made from SB 637 N07718 and the closure lid bolts are made from either SA-564 630 H1100 material or the SB 637 N07718 material. The STC basket is made from Alloy X material. The material properties of Alloy X are the least favorable values from the set of candidate stainless steel types: 316, 316 LN, 304, and 304 LN. The standard HI-TRAC 100D top lid is replaced with a solid circular lid without any penetrations which is made of SA 516 Gr. 70 material. The HI-TRAC pool lid bolts, which are re-analyzed in this application due to the HI-TRAC internal pressure, are made of SA-193 B7. The detailed discussion about these structural materials can be found in Section 3.3 of the HI-STORM 100 FSAR [K.A].

Allowable stresses and stress intensities are calculated using the data provided in the ASME Code [G.B]. Tables 6.1.1 through 6.1.5 contain numerical values of the material strength properties and allowable stresses for all STC and HI-TRAC load bearing materials as a function of temperature.

In all tables the terms S, S_y, and S_u, respectively, denote the design stress, minimum yield strength, and the ultimate strength. Property values at intermediate temperatures that are not reported in the ASME Code are obtained by linear interpolation. Property values are not extrapolated beyond the limits of the Code in any structural calculation.

Additional terms relevant to the analyses are extracted from the ASME Code (Section ND-3321) as follows:

HOLTEC INTERNATIONAL COPYRIGHTED MATERIAL

Symbol	Definition	Description
σ_m	General membrane stress	This stress is equal to the average stress across the solid section under consideration. It excludes discontinuities and concentrations, and is produced only by pressure and other mechanical loads
σ_L	Local membrane stress	This stress is the same as σ_m, except that it includes the effect of discontinuities
σ_b	Bending stress	This stress is equal to the linear varying portion of the stress across the solid section under consideration. It excludes discontinues and concentrations, and is produced only by pressure and other mechanical loads.
S	Allowable Stress	Allowable stress value given in Table 1A and 1B.

It is recognized that the planar temperature distribution in the fuel basket and the STC under the maximum heat load condition is the highest at the canister center and drops monotonically, reaching its lowest value at the outside surface. Strictly speaking, the allowable stresses/stress intensities at any location in the STC should be based on the coincident metal temperature under the specific operating condition. However, in the interest of conservatism, design temperatures are established in Table 3.1.1 for each component, which are upper bounds on the metal temperature for each situational condition.

Finally, the interfacing lift points in the STC and the HI-TRAC transfer cask are subject to specific limits set forth by NUREG-0612 [C.A]. The following table summarizes the interfacing lift points and applicable guidance.

Component	Applicable Guidance	Allowable Stress Limit
STC and HI-TRAC Trunnions	NUREG-0612, Section 5.1.6, (3)	In absence of the redundant load path the induced stresses must be less the 1/10th the ultimate strength of the applicable material.
STC Lifting Points on the Lid		
HI-TRAC Lid Lifting Points		

However, for conservatism the primary stresses in the STC and the HI-TRAC interfacing lift points, under normal handling conditions, are limited to the smaller of 1/10 of the material ultimate strength and 1/6 of the material yield strength as specified in ANSI N14.6 [B.S].

HOLTEC INTERNATIONAL COPYRIGHTED MATERIAL

TABLE 6.1.1
SA516 GRADE 70 MATERIAL PROPERTIES

Temp. (Deg. F)	SA516, Grade 70			
	S_y	S_u	S	E
-20	38.0	70.0	20.0	29.9
100	38.0			29.3
150	35.7			29.0
200	34.8			28.8
250	34.2			28.6
300	33.6			28.3
350	33.05			28.0
400	32.5			27.9
450	31.75			27.7

Definitions:

S_y = Yield Stress (ksi)
S_u = Ultimate Stress (ksi)
S = Maximum Allowable Stress (ksi)
E = Young's Modulus (psi x 10^6)

Notes:
1. Source for S_y values is Table Y-1 of [G.B].
2. Source for S_u values is Table U of [G.B].
3. Source for S values is Table 1A of [G.B]
4. Source for E values is "Carbon steels with C less than or equal to 0.30%" in Table TM-1 of [G.B].

HOLTEC INTERNATIONAL COPYRIGHTED MATERIAL

TABLE 6.1.2
ALLOWABLE STRESS

Code: **ASME ND**
Material: **SA-516, Grade 70**

Classification and Value (ksi)				
Service Condition	**Temp (Deg. F)**	**Maximum Allowable Stress S**	**Membrane Stress σ_m**	**Membrane plus Bending Stress (σ_m or σ_L) + σ_b**
Design and Level A	-20 to 500	20	20	30
Level D			40	48

Notes:
1. S = Maximum allowable stress values from Table 1A of ASME Code, Section II, Part D.
2. Stress Limits per Table ND-3321-1.

TABLE 6.1.3
ALLOWABLE STRESS

Code: **ASME ND**
Bolt Material: **SA-564, 630**

Classification and Value (ksi)			
Service Condition	**Temp (Deg. F)**	**Maximum Allowable Stress S**	**Primary Stress σ_m**
Design and Level A	-20 to 500	40	40
Level D			80

Notes:
1. S = Maximum allowable stress values from Table 3 of ASME Code, Section II, Part D.
2. Stress Limits per Table ND-3321-1.
3 The STC lid bolts shall be prestressed to the Level A primary stress limit.

HOLTEC INTERNATIONAL COPYRIGHTED MATERIAL

TABLE 6.1.4
ALLOWABLE STRESS

Code: **ASME ND**
Bolt Material: **SA-193, B7**

Classification and Value (ksi)			
Service Condition	**Temp (Deg. F)**	**Maximum Allowable Stress S**	**Primary Stress σ_m**
Design and Level A	-20 to 500	25	25
Level D			50

Notes:
1. S = Maximum allowable stress values from Table 3 of ASME Code, Section II, Part D.
2. Stress Limits per Table ND-3321-1.
3. The HI-TRAC top lid and pool lid bolts shall be prestressed to the Level A primary stress limit.

HOLTEC INTERNATIONAL COPYRIGHTED MATERIAL

TABLE 6.1.5
ALLOY X MATERIAL PROPERTIES

Temp. (Deg. F)	Alloy X [ϒ]		
	S_y	S_u	E
-20	30.0	75.0	28.78
100	30.0	75.0	28.12
150	26.7	73.0	27.81
200	25.0	71.0	27.5
250	23.6	68.5	27.25
300	22.4	66.0	27.0
350	21.05	65.2	26.7
400	20.7	64.4	26.4

Definitions:

S_y = Yield Stress (ksi)
α = Mean Coefficient of thermal expansion (in./in. per degree F x 10^{-6})
S_u = Ultimate Stress (ksi)
E = Young's Modulus (psi x 10^6)

Notes:
1. Source for S_y values is Table Y-1 of [G.B].
2. Source for S_u values is Table U of [G.B].
3. Source for E values is material group G in Table TM-1 of [G.B].

ϒ Alloy X represents the least favorable strength value of all the alloys corresponding to SA-240 plate material (type 304, 304LN, 316, and 316LN).

HOLTEC INTERNATIONAL COPYRIGHTED MATERIAL

TABLE 6.1.6
LIST OF ASME CODE ALTERNATIVES FOR STC

Component	Reference ASME Code Section/Article	Code Requirement	Alternative, Justification & Compensatory Measures
STC Confinement Boundary	ND-1000	Statement of requirements for Code stamping of components.	Cask confinement boundary is designed, and will be fabricated in accordance with ASME Code, Section III, Subsection ND to the maximum practical extent, but Code stamping is not required.
STC Confinement Boundary	ND-2000	Requires materials to be supplied by ASME-approved material supplier.	Holtec approved suppliers will supply materials with CMTRs per ND-2000.
STC and STC Basket Assembly	ND-3100 NG-3100	Provides requirements for determining design loading conditions, such as pressure, temperature, and mechanical loads.	These requirements are not applicable. The Licensing Report, serving as the Design Specification, establishes the service conditions and load combinations for fuel transfer.
STC Confinement Boundary	ND-7000	Vessels are required to have overpressure protection.	No overpressure protection is provided. Function of cask vessel is as a radionuclide confinement boundary under normal and hypothetical accident conditions. Cask is designed to withstand maximum internal pressure and maximum accident temperatures.
STC Confinement Boundary	ND-8000	States requirement for name, stamping and reports per NCA-8000	STC to be marked and identified in accordance with the drawing. Code stamping is not required. QA data package prepared in accordance with Holtec's approved QA program.

HOLTEC INTERNATIONAL COPYRIGHTED MATERIAL
SHADED AREAS DENOTE HOLTEC PROPRIETARY INFORMATION

TABLE 6.1.6 (Continued)
LIST OF ASME CODE ALTERNATIVES FOR STC

Component	Reference ASME Code Section/Article	Code Requirement	Alternative, Justification & Compensatory Measures
STC Basket Assembly	NG-4420	NG-4427(a) requires a fillet weld in any single continuous weld may be less that the specified fillet weld dimension by not more than 1/16 inch, provided that the total undersize portion of the weld does not exceed 10 percent of the length of the weld. Individual undersize weld portions shall not exceed 2 inches in length.	Modify the Code requirement (intended for core support structures) with the following text prepared to accord with the geometry and stress analysis imperatives for the fuel basket: For the longitudinal STC basket fillet welds, the following criteria apply: 1) The specified fillet weld throat dimension must be maintained over at least 92 percent of the total weld length. All regions of undersized weld must be less than 3 inches long and separated from each other by at least 9 inches. 2) Areas of undercuts and porosity beyond that allowed by the applicable ASME Code shall not exceed 1/2 inch in weld length. The total length of undercut and porosity over any 1-foot length shall not exceed 2 inches. 3) The total weld length in which items (1) and (2) apply shall not exceed a total of 10 percent of the overall weld length. The limited access of the STC basket panel longitudinal fillet welds makes it difficult to perform effective repairs of these welds and creates the potential for causing additional damage to the basket assembly (e.g., to the neutron absorber and its sheathing) if repairs are attempted. The acceptance criteria provided in the foregoing have been established to comport with the objectives of the basket design and preserve the margins demonstrated in the supporting stress analysis. From the structural standpoint, the weld acceptance criteria are established to ensure that any departure from the ideal, continuous fillet weld seam would not alter the primary bending stresses on which the design of the fuel baskets is predicated. Stated differently, the permitted weld discontinuities are limited in size to ensure that they remain classifiable as local stress elevators ("peak stress", F, in the ASME Code for which specific stress intensity limits do not apply).

HOLTEC INTERNATIONAL COPYRIGHTED MATERIAL
SHADED AREAS DENOTE HOLTEC PROPRIETARY INFORMATION

TABLE 6.1.6 (Continued)
LIST OF ASME CODE ALTERNATIVES FOR STC

Component	Reference ASME Code Section/Article	Code Requirement	Alternative, Justification & Compensatory Measures
STC Basket Assembly	NG-8000	States requirements for nameplates, stamping and reports per NCA-8000.	STC basket to be marked and identified in accordance with the drawing. No Code stamping is required. The STC basket data package is to be in conformance with Holtec's QA program.

HOLTEC INTERNATIONAL COPYRIGHTED MATERIAL
SHADED AREAS DENOTE HOLTEC PROPRIETARY INFORMATION

6.2 Structural Analysis

Calculations of the stresses in the different components of the STC and the HI-TRAC from the effects of mechanical load case assembled in Table 3.2.4 are presented in the following.

The purpose of the analyses summarized herein is to provide the necessary assurance that there will be no unacceptable risk of loss to configuration assumed by criticality analysis, unacceptable release of radioactive material, unacceptable radiation levels, or impairment of ready retrievability of fuel from the STC and the STC from the HI-TRAC transfer cask.

Each load case in Table 3.2.4 is considered sequentially and all affected components are analyzed to determine the factors of safety.

6.2.1 Load Case 1: Design Pressure

6.2.1.1 STC

Since the STC is a pressure vessel, calculations are performed to demonstrate that the stresses that develop in the STC shell, baseplate, and the closure lid under design internal pressure meet the ASME Subsection ND stress limits. The stresses in the STC shell are calculated using the classical formula for thin-walled pressure vessels, which are:

$$\sigma_l = \frac{Pr}{2t}, \qquad \sigma_h = \frac{Pr}{t}, \qquad \sigma_r = -P$$

where P = internal pressure (per Table 3.2.1);
r = mean radius of STC inner shell = 21.5 in;
t = thickness of STC inner shell excluding weld overlay = 3/4 in.

The circumferential stress (σ_h), the axial stress (σ_l), and the radial stress (σ_r) are computed for both normal and accident internal pressures. The results are given in the following table:

Pressure	σ_h (psi)	σ_l (psi)	σ_r (psi)
Normal, P = 50 psi	1,433	717	-50
Accident, P = 90 psi	2,580	1,290	-90

HOLTEC INTERNATIONAL COPYRIGHTED MATERIAL

It is noted that the above calculations conservatively assume that the STC inner shell is acting alone to resist the internal pressure, without any credit for the strengthening effects of the lead backing or the STC outer shell. Table 6.1.2 provides the allowable membrane stress for Level A and Level D conditions. A safety factor greater than 1.0 exists for the case of normal and accident pressures.

The STC closure lid is modeled as a simply supported plate and is subject to the design internal pressure. The radius of the plate is set to be equal to the bolt circle diameter, and the thickness of the plate is equal to the minimum closure lid thickness.

The closure joint in the STC employs a controlled compression design following guidance from Holtec Position Paper [N.C]. Therefore, the bolts are evaluated for the load from STC internal pressure and the minimum required load to compress the gasket to the "seating stress" demand of the gasket material.

The results for the STC closure lid and the closure bolts are reported in the table below:

Result	Pressure	Maximum Stress (psi)	Allowable Stress (psi)	Safety Factor
Bending Stress in Lid	P = 90 psi (Table 3.2.1)	2,425	30,000	12.37
Tensile Stress in Bolts		4,326	40,000	9.25
Shear Stress in Bolt Threads		792	24,000	30.3

Note: Level A stress limits are conservatively used for the accident internal pressure.

The above results show that the STC closure lid and the closure bolts have significant margins against failure even when the accident internal pressure is evaluated using Level A stress limits. In addition, the amount of bolt preload that is needed to maintain the gasket seal under the accident internal pressure is less than 10% of the bolt's tensile yield capacity. However, to insure a leak tight seal under all normal and hypothetical accident loading conditions (including a non-mechanistic tip over of the HI-TRAC with the STC inside), the STC closure bolts shall be prestressed to the maximum allowable stress per Table 3 of ASME Section II, Part D [G.B], which is given in Table 6.1.3. Appendix XII of the ASME Code (see XII-1100(c) and XII-1100(d)) [G.E] permits the use of an initial bolt stress that equals (or even exceeds) the maximum allowable stress given in Table 3 of [G.B] provided that yielding of the bolts does not occur. There is no risk of yielding the STC closure bolts since the maximum allowable stress for the bolts is less than 50% of the yield strength of bolt material (SA-564 630 H1100). A further evaluation of the seal performance during the non-mechanistic tip over event is presented in Subsection 6.2.8.

HOLTEC INTERNATIONAL COPYRIGHTED MATERIAL

The stresses in the STC baseplate due to design internal pressure are bounded by the results in Subsection 6.2.3.2, which considers the combined effects of internal pressure plus normal handling.

A detailed analysis for failure from cyclic fatigue of the STC closure bolts is not performed because:

1. The number of cycles of loading and unloading is quite small (less than 500; 500 loading cycles translate to transfer of 6000 fuel assemblies @ 12 assemblies in each transfer evolution). For purposes of the fatigue margin assessment, the number of cycles is assumed to be 1000, i.e., N = 1000.

2. The fatigue equations (curves) for the STC closure bolts (high strength steel), originate from the 2004 ASME code (Section III, Appendix I, Figure I-9.4) and show that the allowable Sa (cyclic fatigue amplitude) is considerably larger than the actual stress amplitude due to internal pressure. The table below provides the comparison:

Component	Material	Stress Amplitude (under internal pressure) 'S' (ksi) ‡	Cyclic Fatigue Amplitude 'Sa' from Fatigue Curve @ 1000 cycles (ksi)	Ratio of Sa to Actual Stress
STC Closure Bolts	SA-564 630 H1100 or SB637 N07718	20	81	4.1

‡ Stress amplitude is one half of corresponding maximum allowable stress.

The margin indicated by the above simplified evaluation underlays the decision to forgo a detailed fatigue analysis for the STC closure bolts.

With regard to the STC welds, they are designed for repeated normal condition handling operations with high factors of safety to assure structural integrity. The resulting cyclic loading produces stresses that are well below the endurance limit of the weld material as demonstrated below.

Under normal operating conditions, the weld stress limit is 0.3Su. The alternating stress in the weld is equal to 1/2 of the maximum stress or 0.15Su. At a temperature of 350°F (177°C), Table 6.1.1 shows that the ultimate strength and Young's modulus of the base metal (SA-516 Gr. 70) are 70.0 ksi and 28.0×10^3 ksi, respectively. Therefore, incorporating a fatigue strength reduction factor of 4 (conservatively taken from Table NG-3352-1), the effective stress amplitude for calculating usage factor using Figure I-9.1 (ASME Code, Section III Appendices) is (taking the ratio of the modulus used in the figure to the modulus used here):

HOLTEC INTERNATIONAL COPYRIGHTED MATERIAL

$$S_a = \frac{0.15(70.0\text{ksi})(4)(30.0\times10^3\text{ ksi})}{28.0\times10^3\text{ ksi}} = 45\text{ksi}$$

Using Figure I-9.1, the permissible number of cycles corresponding to this stress amplitude is 6,055. Therefore, since the number of STC loading campaigns is conservatively estimated at 500, fatigue failure of the STC welds due to the loading and unloading process is not a concern.

6.2.1.2 HI-TRAC

The HI-TRAC is also analyzed for the design pressures in Table 3.2.1. The circumferential stress (σ_h), the axial stress (σ_l), and the radial stress (σ_r) are computed for both normal and accident internal pressures. The stresses in the HI-TRAC shell are calculated using the classical formula for thin-walled pressure vessels, which are:

$$\sigma_l = \frac{Pr}{2t}, \qquad \sigma_h = \frac{Pr}{t}, \qquad \sigma_r = -P$$

where P = internal pressure (per Table 3.2.1);
r = mean radius of HI-TRAC inner shell = 34.75 in;
t = thickness of HI-TRAC inner shell = 0.75 in.

The results are given in the following table:

Pressure	σ_h (psi)	σ_l (psi)	σ_r (psi)
Normal, P = 30 psi	1,390	695	-30
Accident, P = 50 psi	2,317	1,158	-50

It is noted that the above calculations conservatively assume that the HI-TRAC inner shell is acting alone to resist the internal pressure, without any credit for the strengthening effects of the lead backing or the HI-TRAC outer shell. Table 6.1.2 provides the allowable membrane strength for Level A conditions. A safety factor greater than 1.0 exists for the case of normal and accident pressures.

The HI-TRAC top lid is modeled as a simply supported plate and is subject to the design internal pressure. The radius of the plate is set to be equal to the bolt circle diameter, and the thickness of the plate is equal to the minimum top lid thickness.

The bolts are evaluated for the load from HI-TRAC internal pressure and the minimum required load to compress the gasket to the "seating stress" demand of the gasket material

HOLTEC INTERNATIONAL COPYRIGHTED MATERIAL

The results the HI-TRAC top lid and the top lid bolts are reported in the table below:

Result	Pressure	Maximum Stress (psi)	Allowable Stress (psi)	Safety Factor
Bending Stress in Top Lid	P = 50 psi (Table 3.2.1)	20,820	30,000	1.4
Tensile Stress in Top Lid Bolts		15,640	25,000	1.6

Notes:
1. Level A stress limits are conservatively used for the accident internal pressure.
2. The calculated safety factor for the top lid bolts in tension bounds other failure modes (i.e. thread shear).

The above results show that the HI-TRAC top lid and the top lid bolts have substantial margins against failure even when the accident internal pressure is evaluated using Level A stress limits. In addition, the amount of bolt preload that is needed to maintain the gasket seal under the accident internal pressure is less than 20% of the bolt's tensile yield capacity. However, to insure a leak tight seal under all normal and hypothetical accident loading conditions (including a non-mechanistic tip over of the HI-TRAC with the STC inside), the HI-TRAC top lid bolts shall be prestressed to the maximum allowable stress per Table 3 of ASME Section II, Part D [G.B], which is given in Table 6.1.4. Appendix XII of the ASME Code (see XII-1100(c) and XII-1100(d)) [G.E] permits the use of an initial bolt stress that equals (or even exceeds) the maximum allowable stress given in Table 3 of [G.B] provided that yielding of the bolts does not occur. There is no risk of yielding the HI-TRAC top lid closure bolts since the maximum allowable stress for the bolts is less than 30% of the yield strength of bolt material (SA-193 B7). A further evaluation of the seal performance during the non-mechanistic tip over event is presented in Subsection 6.2.8.

The stresses in the HI-TRAC pool lid due to design internal pressure are bounded by the results in Subsection 6.2.3.4, which considers the combined effects of internal pressure plus normal handling.

The detailed fatigue analysis for failure of HI-TRAC top lid (SA 516 Gr. 70) and top lid bolts (SA 193 B7) is unwarranted based on the justification provided in section 6.2.3.4 for the pool lid and the pool lid bolts.

HOLTEC INTERNATIONAL COPYRIGHTED MATERIAL

6.2.2 Load Case 2: Normal Operating Pressure Plus Temperature

There are no significant thermal stresses in STC enclosure vessel since the presence of water both inside and outside of the STC minimizes the thermal gradients across the pressure boundary.

The stress calculations in Subsection 6.2.1 for Load Case 1 bound the results for this load case since (i) the design internal pressure considered in Subsection 6.2.1 bounds the normal operating pressure, and (ii) the allowable stresses used in Subsection 6.2.1 are based on the temperature limits in Table 3.1.1 for normal operation.

6.2.3 Load Case 3: Normal Handling

In this subsection, analyses for all lifting operations applicable to the transfer of fuel from IP-3 to IP-2 using the STC and the HI-TRAC are presented to demonstrate compliance with applicable codes and standards.

The following components participate in lifting operations: lifting trunnions located at the top of the HI-TRAC transfer cask, lifting trunnions and closure lid located at the top of the STC, STC baseplate, HI-TRAC pool lid, and lid lifting connections for the HI-TRAC closure lid and STC closure lid.

The HI-TRAC 100D lifting trunnions and the surrounding structure are analyzed in Section 3.4.3 of the HI-STORM 100 FSAR [K.A] for a bounding lifted weight of 200,000 lb (as compared to a total weight of 190,000 lb for the HI-TRAC 100D including a fully loaded STC).

The evaluation of the adequacy of the participating components entails careful consideration of the applied loading and associated stress limits. The load combination D + H, where H is the "handling load", is the generic case for all lifting adequacy assessments. The term D denotes the dead load. Quite obviously, D must be taken as the bounding value of the dead load of the component being lifted. In all lifting analyses considered in this document, the handling load H is assumed to be 0.15D. In other words, the inertia amplifier during the lifting operation is assumed to be equal to 0.15g. This value is consistent with the guidelines of the Crane Manufacturer's Association of America (CMAA) [N.A], Specification No. 70, 1988, Section 3.3, which stipulates a dynamic factor equal to 0.15 for slowly executed lifts. Thus, the "apparent dead load" of the component for stress analysis purposes is $D^* = 1.15D$. Unless otherwise stated, all lifting analyses in this report use the "apparent dead load", D^*, as the lifted load.

HOLTEC INTERNATIONAL COPYRIGHTED MATERIAL

In general, the stress analysis to establish safety pursuant to NUREG-0612, Regulatory Guide 3.61, and the ASME Code, requires evaluation of three discrete zones which may be referred to as (i) the trunnions and other lift points, (ii) the trunnion/component interface, hereinafter referred to as Region A, and (iii) the rest of the component, specifically the stressed metal zone adjacent to Region A, herein referred to as Region B.

Stress limits germane to each of the above three areas are discussed below:

i. Trunnions and other lift points: NUREG-0612 recommends that under the "apparent dead load", D^*, the maximum primary stress in the trunnion and the other lifting point be less than 10% of the trunnion material ultimate strength. However, for conservatism the recommendations from ANSI N14.6 [B.S] are also implemented by considering the additional stress limit of $1/6^{th}$ the material yield strength.

ii. Region A: Trunnion/Component Interface: Stresses in Region A must meet ASME Code Level A limits under applied load D*. Additionally, for conservatism the recommendations from Regulatory Guide 3.61 are implemented to show that the primary stress in the cross-section does not exceed yield strength of the applicable material under load 3D*.

iii. Region B: Typically, the stresses in the component in the vicinity of the trunnion/component interface are higher than elsewhere. However, exceptional situations exist. For example, when lifting a loaded STC, the STC baseplate, which supports the entire weight of the fuel and the fuel basket, is a candidate location for high stress even though it is far removed from the lifting location. Even though the STC baseplate would normally belong to the Region B category, for conservatism it is considered as Region A in this report. The pool lid of the HI-TRAC transfer cask also fall into this dual category. In general, however, all locations of high stress in the component under D^* must also be checked for compliance with ASME Code Level A stress limits.

Unless explicitly stated otherwise, all analyses of lifting operations presented in this report follow the load definition and allowable stress provisions of the foregoing. Consistent with the practice adopted throughout this chapter, results are presented in dimensionless form, as safety factors, defined as

$$\text{Safety Factor, } \beta = \frac{\text{Allowable Stress in the Region Considered}}{\text{Computed Maximum Stress in the Region}}$$

The safety factor, defined in the manner of the above, is the <u>added margin</u> over what is recommended by the applicable code (NUREG-0612 or ASME or Regulatory Guide 3.61).

HOLTEC INTERNATIONAL COPYRIGHTED MATERIAL

In the following subsections, each of the lifting analyses performed to demonstrate compliance with regulations are briefly described. Summary results are presented for each of the analyses.

It is recognized that stresses in Region A are subject to two distinct criteria, namely Level A stress limits under D* and yield strength at 3D*. The applicable criteria is identified in the summary tables, under the column heading "Item", using the "3D*" identifier.

All of the lifting analyses reported on in this Subsection are designated as Load Case 3 in Table 3.2.4.

6.2.3.1 STC Lifting Trunnions

The two lifting trunnions for the STC are spaced at 180 degrees. The trunnions are designed for a two-point lift in accordance with the aforementioned NUREG-0612 criteria. The trunnion lifting analysis conservatively meets the stress limits from both NUREG-0612 and ANSI N14.6.

Specifically, the following results are obtained:

STC Lifting Trunnions		
	Minimum Computed Safety Factor (1), (2)	**Minimum Required Safety Factor (1), (2)**
Bending	6.78 (15.83)	6.0 (10.0)
Shear	9 (16.5)	6.0 (10.0)

Notes:
(1) The results in the parenthesis comply with the provisions from NUREG-0612, a minimum safety factor of 10 against ultimate strength is required under applicable lifted load (working stress).
(2) The limiting safety factors result from using 1/6th of yield stress as acceptance criterion following ANSI N14.6.

6.2.3.2 STC Lifting

PROPRIETARY TEXT REMOVED.

HOLTEC INTERNATIONAL COPYRIGHTED MATERIAL

Summary of Results from STC Lifting			
Item	**Induced Stress (or Max. Load)**	**Allowable Stress (or Capacity)**	**Minimum Safety Factor**
STC Closure Lid (psi)	6,928	30,000	4.33
Lid Lifting Points (lbf)	92,000	136,733	1.486
Note that the lid lifting points (also referred as interfacing lift points) are subjected to the provisions from NUREG-0612 and ANSI N14.6. Only the limiting stress values and safety factors are reported in this table.			

6.2.3.3 STC Baseplate

PROPRIETARY TEXT REMOVED

Summary of Results for STC Baseplate under Normal Handling (Load Case 3)			
Item	**Value**	**Allowable**	**Safety Factor**
Bending Stress in Baseplate (psi)	1,823	30,000	16.46
Bending Stress in Baseplate (3D*) (psi)	2,740	31,800	11.61

6.2.3.4 HI-TRAC Pool (Bottom) Lid

Section 1.5 of the HI-STORM 100 FSAR [K.A] lists various drawings for the design and construction of the HI-TRAC. Specifically, Holtec dwg. 2145 and 4128 pertain to the HI-TRAC 100D. During lifting of the HI-TRAC, the HI-TRAC pool lid supports the weight of a loaded STC plus water. Calculations are performed to show structural integrity of the HI-TRAC pool lid under this condition. In accordance with the general guidelines set down at the beginning of Subsection 6.2.3, the pool lid is considered as Region A for evaluating safety factors. The analysis shows that the stress in the pool lid is less than the Level A allowable stress under pressure equivalent to the heaviest STC, contained water, and lid self weight. Stresses in the lids and bolts are also shown to be below yield under three times the applied lifted load (using Regulatory Guide 3.61 criteria). The threaded holes in the HI-TRAC pool lid are also examined for acceptable engagement length under the condition of lifting the STC. It is demonstrated that the pool lid peripheral bolts have adequate engagement length into the pool lid to permit the transfer of the required load. The safety factor is defined based on the strength limits imposed by Regulatory Guide 3.61.

HOLTEC INTERNATIONAL COPYRIGHTED MATERIAL

The following table summarizes the results of the analyses for the HI-TRAC pool lid. Results given in the following table compare calculated stress (or load) and allowable stress (or load). In all cases, the safety factor is defined as the allowable value divided by the calculated value.

Summary of Results for HI-TRAC Pool Lid under Normal Handling (Load Case 3)			
Item	**Value**	**Allowable**	**Safety Factor**
Bending Stress in Pool Lid Top Plate (psi)	27,160	30,000	1.105
Bending Stress in Pool Lid Bottom Plate (psi)	6,789	30,000	4.4
Pool Lid Bolt (psi)	18,380	25,000	1.4
Bending Stress in Pool Lid Top Plate (3D*) (psi)	30,190	32,500	1.08
Bending Stress in Pool Lid Bottom Plate (3D*) (psi)	19,280	32,500	1.69
Pool Lid Bolt Force (kips) (3D*)	20,430	91,500	4.5

To insure a leak tight seal under all normal and hypothetical accident loading conditions, the HI-TRAC pool lid bolts shall be prestressed to the maximum allowable stress per Table 3 of ASME Section II, Part D [G.B], which is given in Table 6.1.4. Appendix XII of the ASME Code (see XII-1100(c) and XII-1100(d)) [G.E] permits the use of an initial bolt stress that equals (or even exceeds) the maximum allowable stress given in Table 3 of [G.B] provided that yielding of the bolts does not occur. There is no risk of yielding the HI-TRAC pool lid bolts since the maximum allowable stress for the bolts is less than 30% of the yield strength of bolt material (SA-193 B7).

A detailed analysis for failure from cyclic fatigue of the pool lid top plate and the lid bolts is not performed because:

1. The number of cycles of loading and unloading is quite small (less than 500; 500 loading cycles translate to transfer of 6000 fuel assemblies @ 12 assemblies in each transfer evolution). For purposes of the fatigue margin assessment, the number of cycles is assumed to be 1000, i.e., N = 1000.

2. The fatigue equations (curves) for the pool lid top plate (carbon steel) and bolts (high strength steel), originate from the 2004 ASME code (Section III , Appendix I, Figures I-9.1 and I-9.4) and show that the allowable Sa (cyclic fatigue amplitude) is considerably larger than the actual stress amplitude during normal handling. The table below provides the comparison:

HOLTEC INTERNATIONAL COPYRIGHTED MATERIAL

Component	Material	Stress Amplitude (under normal handling conditions) 'S' (ksi) ‡	Cyclic Fatigue Amplitude 'Sa' from Fatigue Curve @ 1000 cycles (ksi)	Ratio of Sa to Actual Stress "S"
Pool Lid Top Plate	SA-516 Gr.70	10	82	8.2
Pool Lid Bolts	SA-193 B7	12.5	80	6.4

‡ Stress amplitude is one half of corresponding maximum allowable stress.

The overarching margins indicated by the above simplified evaluation underlay the decision to forgo a detailed fatigue analysis for the pool lid top plate and the pool lid bolts.

6.2.3.5 Lid Lifting Analyses

The STC lid lifting analysis is performed to ensure that the threaded connections provided in the lid are adequately sized. The lifting analysis of the STC closure lid is based on a vertical orientation of loading from an attached lifting device.

In addition to the STC closure lid lifting analysis, the strength qualification of the lifting holes for the HI-TRAC top lid has been performed. The qualification is based on the NUREG-0612 for a non-redundant lifting system. Loads to lifting devices are permitted to be at a maximum angle of 45 degrees from vertical. A summary of results, pertaining to the various lid lifting operations, is given in the table below:

HOLTEC INTERNATIONAL COPYRIGHTED MATERIAL

Summary of Lid Lifting Analyses		
Item	**Dead Load (lb)**	**Minimum Safety Factor**
HI-TRAC Top Lid	5000	3.4
STC Closure Lid	Refer to bounding analysis in section 6.2.3.2	

The analysis also demonstrates that thread engagement is sufficient for the threaded holes used solely for lid lifting.

6.2.4 Load Case 4: Fuel Assembly Drop Accident

PROPRIETARY TEXT REMOVED

6.2.5 Load Case 5: HI-TRAC Vertical Drop Accident

PROPRIETARY TEXT REMOVED

6.2.6 Load Cases 6 and 7: Seismic Stability of Loaded VCT and Loaded HI-TRAC

PROPRIETARY TEXT REMOVED

6.2.7 Load Case 8: Seismic Stability of STC in the Fuel Pool

PROPRIETARY TEXT REMOVED

6.2.8 Load Case 9: Non-Mechanistic Tipover of Loaded HI-TRAC Cask

PROPRIETARY TEXT REMOVED

HOLTEC INTERNATIONAL COPYRIGHTED MATERIAL

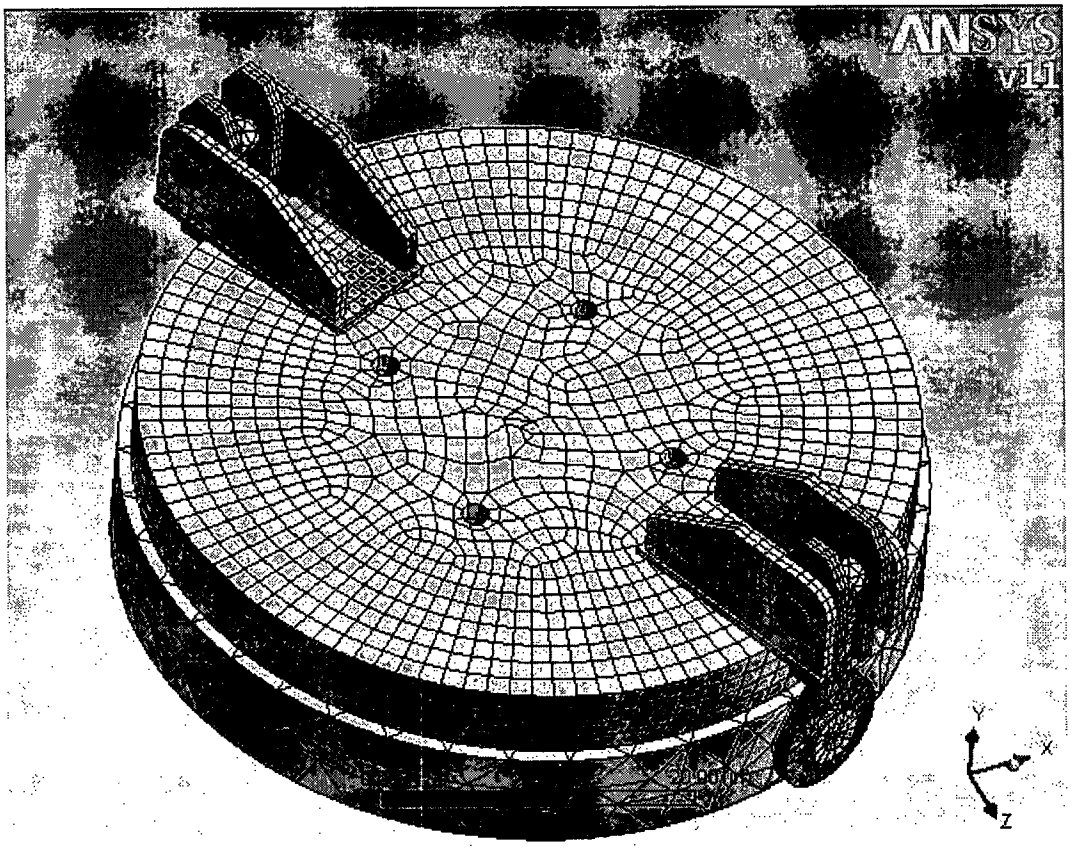

Figure 6.2.1 Finite Element Model Set-up for the STC Lifting

HOLTEC INTERNATIONAL COPYRIGHTED MATERIAL

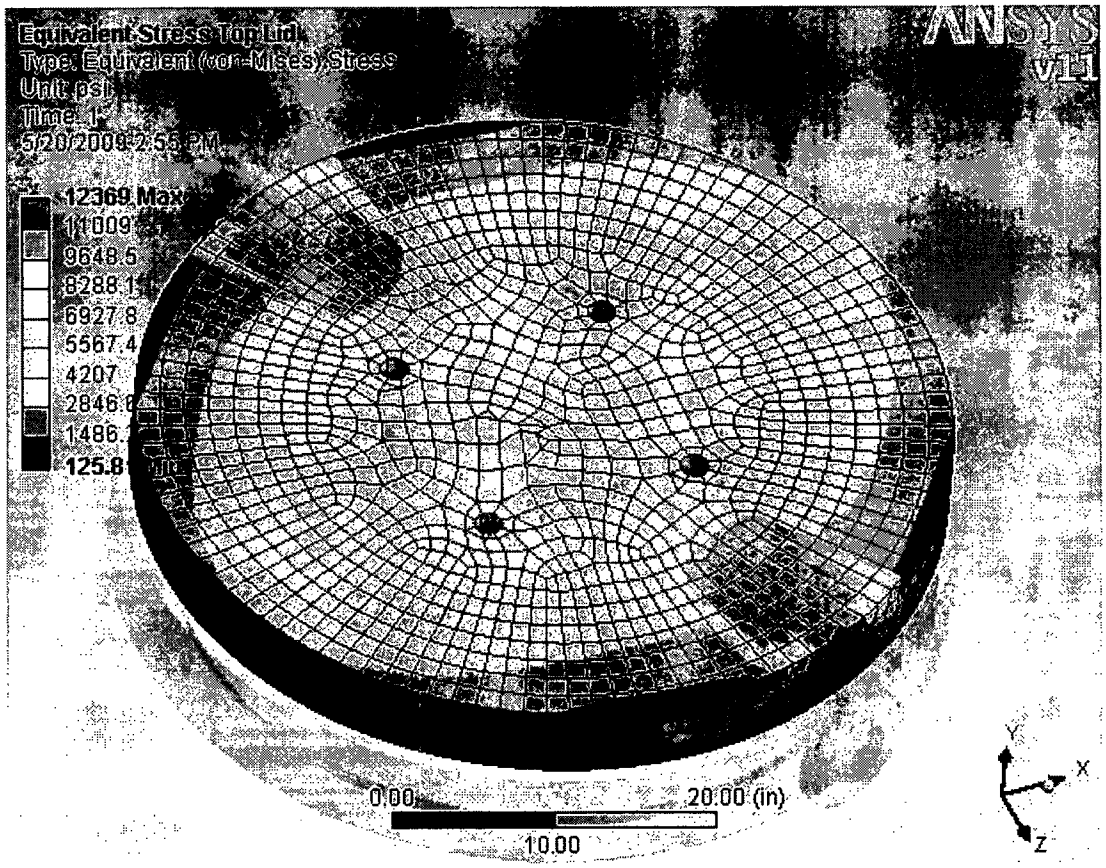

Figure 6.2.2 Resulting Stress from STC Lifting

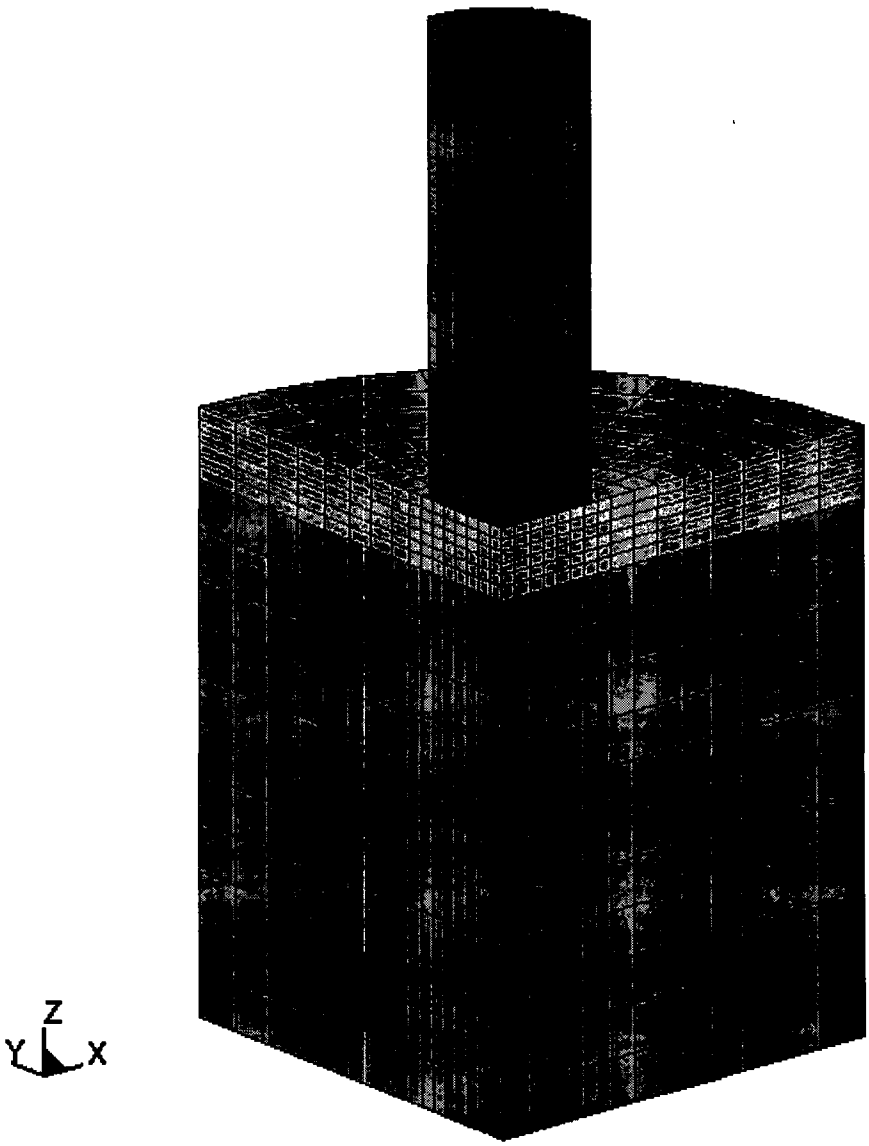

Figure 6.2.3 Finite Element Model for the HI-TRAC 100D Drop Analysis

HOLTEC INTERNATIONAL COPYRIGHTED MATERIAL

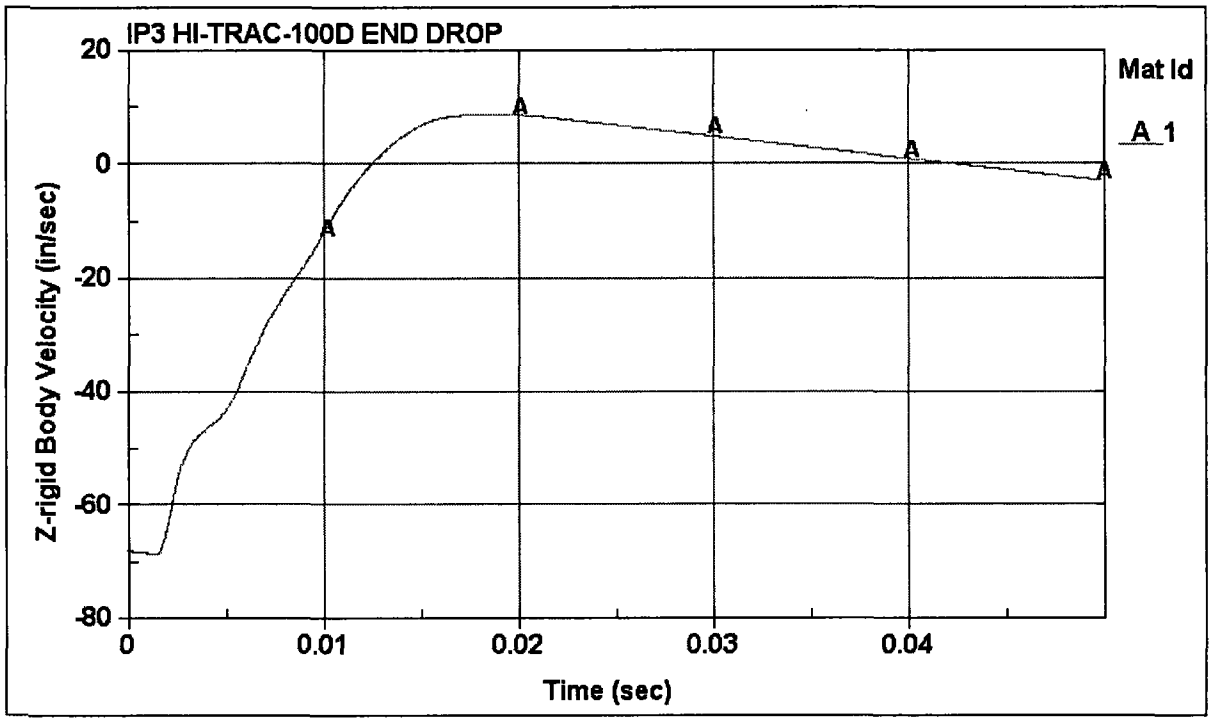

Figure 6.2.4 HI-TRAC 100D Transfer Cask Impact Velocity Time History

HOLTEC INTERNATIONAL COPYRIGHTED MATERIAL

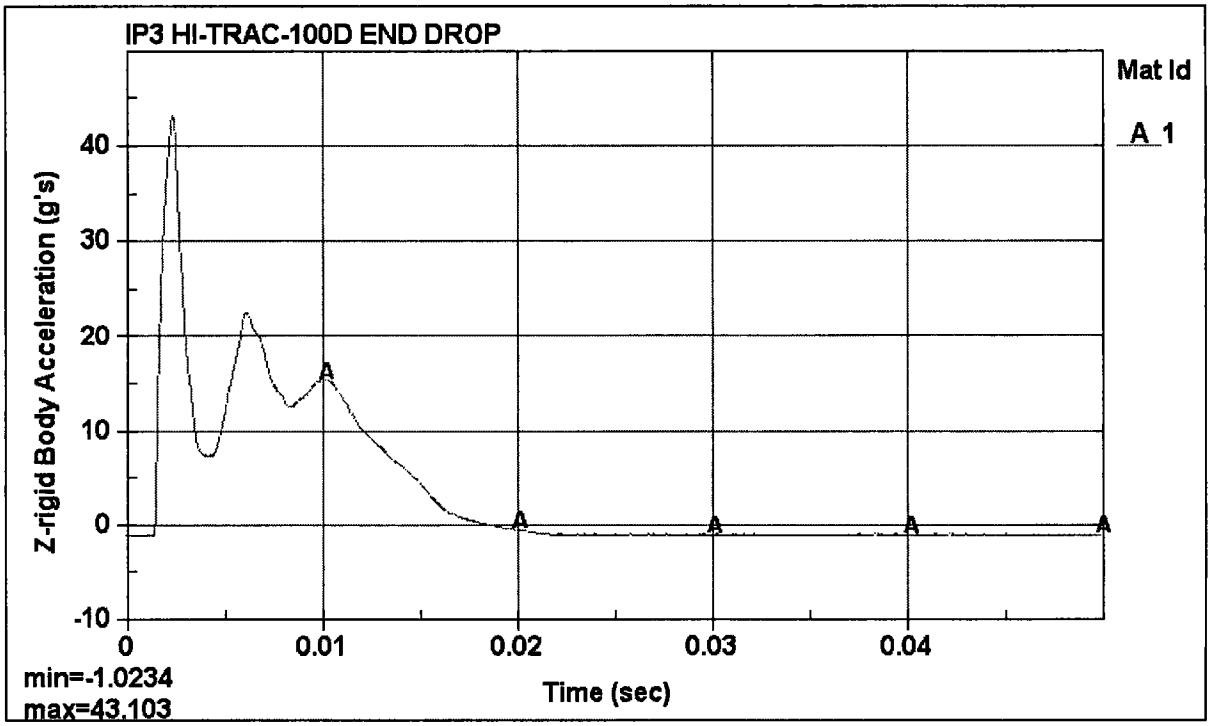

Figure 6.2.5 Deceleration Time History of the Dropped HI-TRAC 100D Transfer Cask

PROPRIETARY FIGURES REMOVED

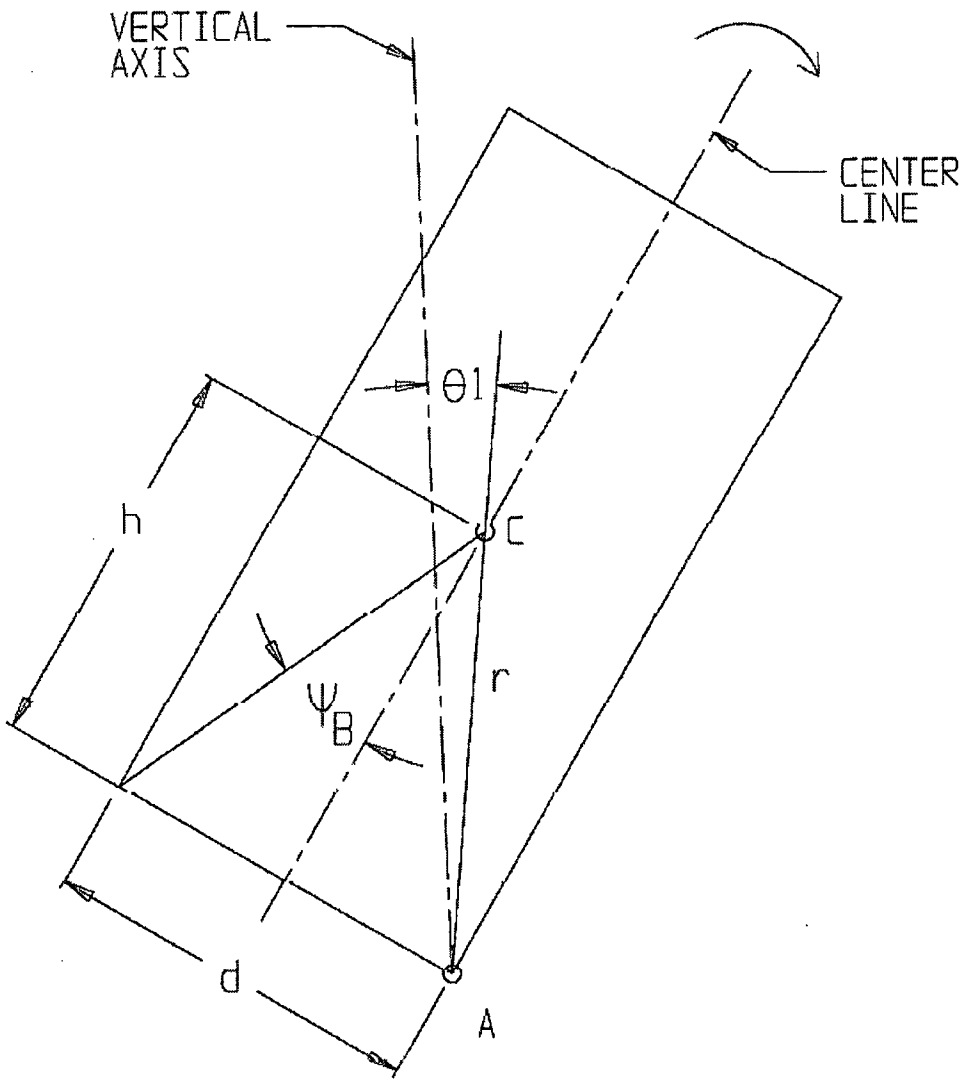

Figure 6.2.8 Initial Cask Orientation and Pivot Point of the Tipover Event

HOLTEC INTERNATIONAL COPYRIGHTED MATERIAL

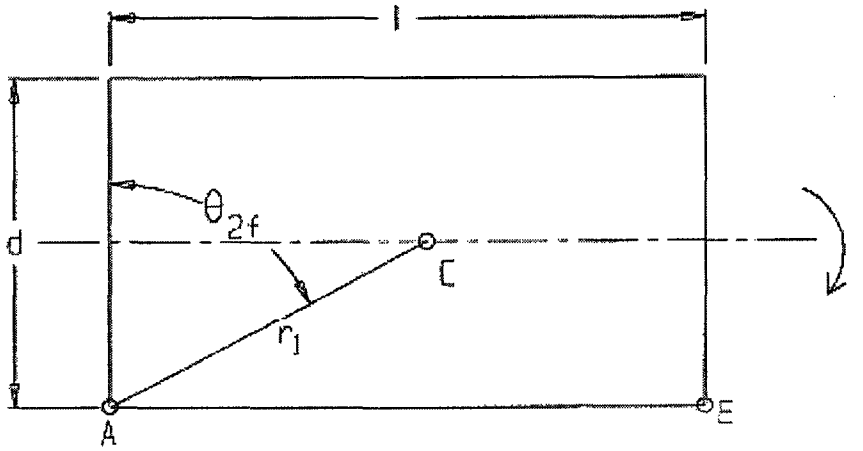

Figure 6.2.9 Orientation of the Cask in a Tipover Event before Impacting the Target

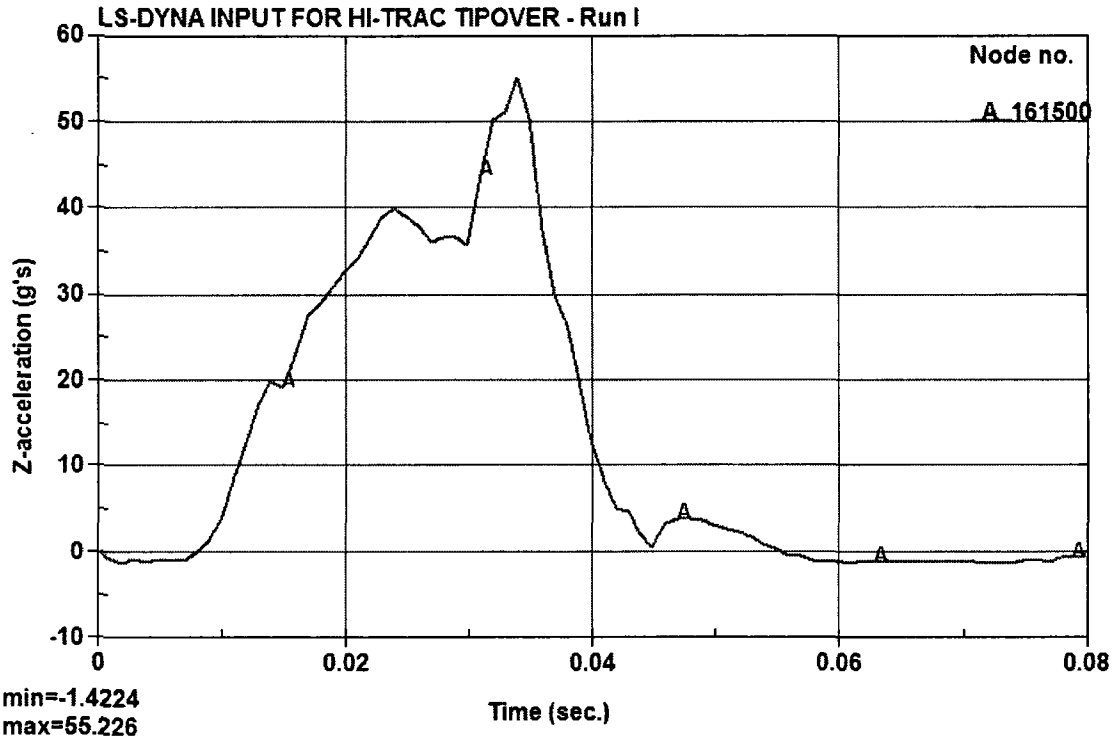

Figure 6.2.10 Z-direction (Lateral) Rigid Body Deceleration Time History, Fuel Basket Top Center Node – Governing Case

HOLTEC INTERNATIONAL COPYRIGHTED MATERIAL

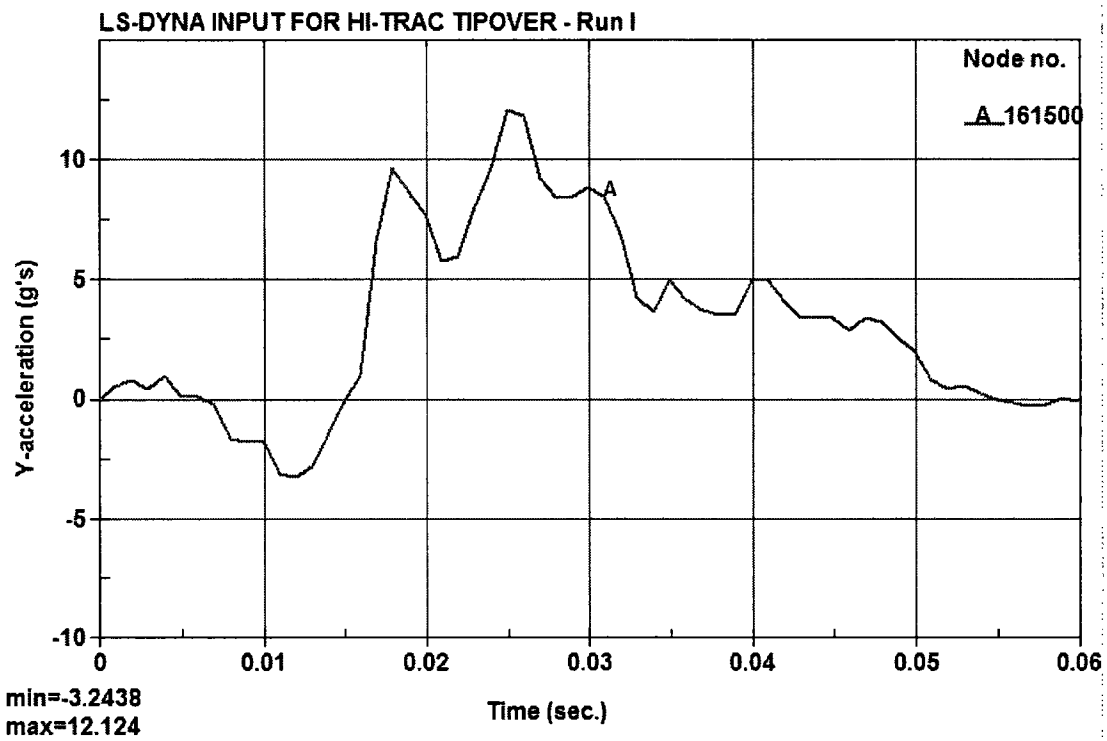

Figure 6.2.11 Y-direction (Axial) Rigid Body Deceleration Time History, Fuel Basket Top Center Node – Governing Case

PROPRIETARY FIGURE REMOVED

HOLTEC INTERNATIONAL COPYRIGHTED MATERIAL

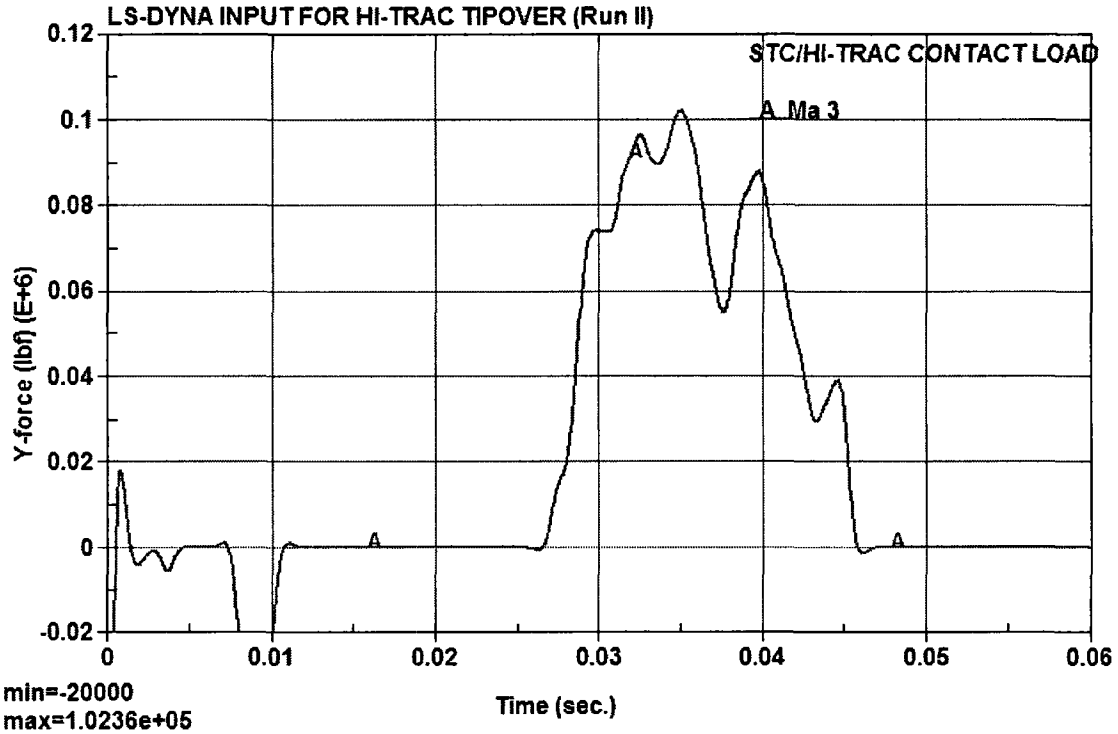

Figure 6.2.13 Contact Force on the HI-TRAC (Governing Case)

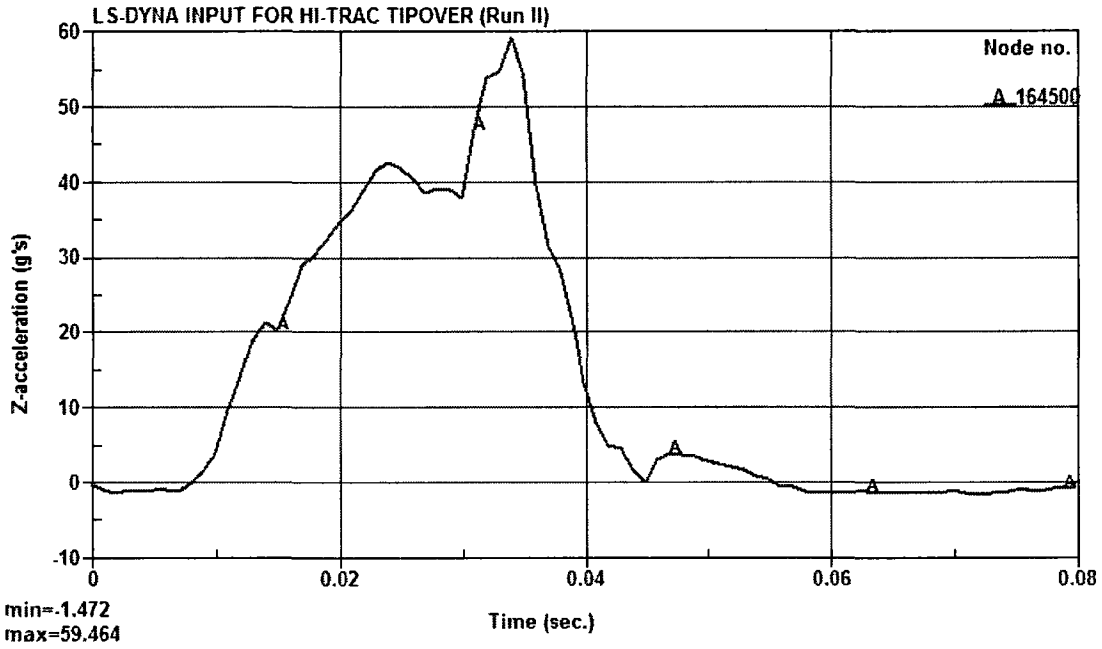

Figure 6.2.14 STC Lateral Deceleration - (Governing Case)

PROPRIETARY FIGURE REMOVED

HOLTEC INTERNATIONAL COPYRIGHTED MATERIAL

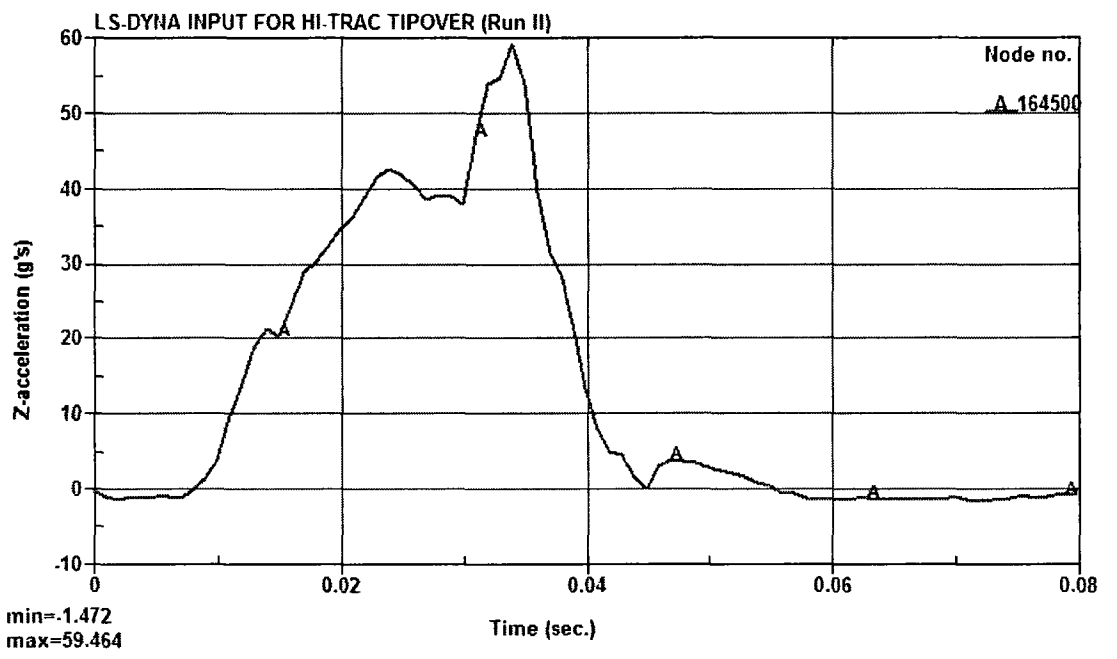

Figure 6.2.16 Deceleration of STC Top Node – Lateral Direction

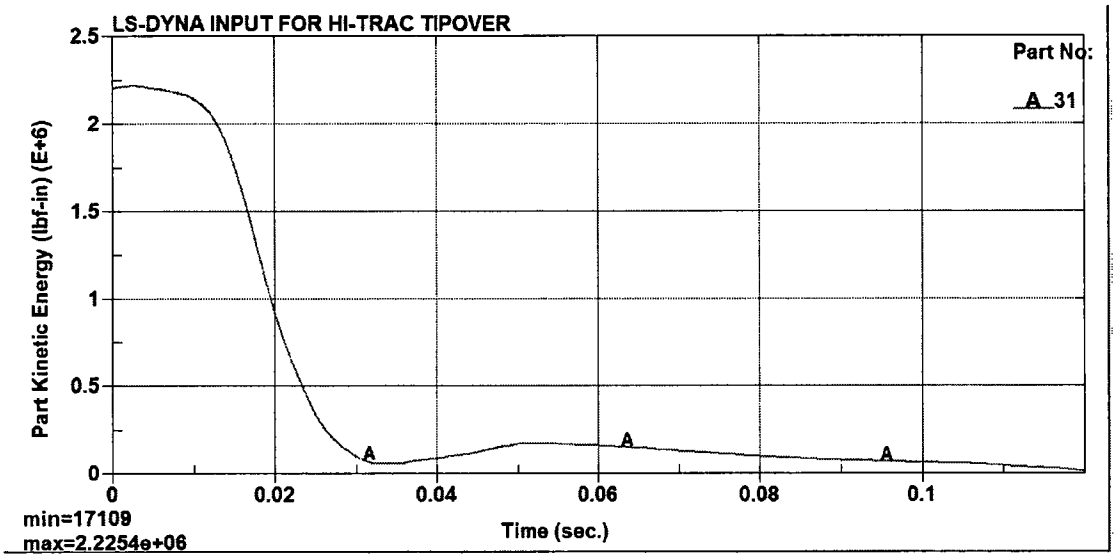

Figure 6.2.17 Kinetic Energy of the STC During Impact

CHAPTER 7: SHIELDING DESIGN AND ALARA CONSIDERATIONS

7.0 INTRODUCTION

This chapter presents the shielding design evaluation of the shielded transfer canister (STC) used to transfer fuel assemblies from the Indian Point Unit 3 spent fuel pool (SFP) to the Indian Point Unit 2 SFP. The STC will be placed inside a HI-TRAC for the transfer between Unit 3 and Unit 2. The purpose and goal of the dose calculations are two-fold:

- Determine dose rates and doses at various distances from the cask (bare STC and STC in the HI-TRAC), to demonstrate that the respective regulatory limits are met; and
- Determine dose rates in the direct vicinity of the cask, to assist radiation protection operations and enable operation of the systems consistent with ALARA principles. Those dose rates focus more on the bare STC, due to the higher dose rates for the STC without the HI-TRAC.

Due to the different purpose, some of the calculational details are different between these two sets of calculations:

- Doses at distances
    - More bounding modeling assumptions are used, to ensure that compliance with regulatory limits can be clearly demonstrated.
    - Average dose rates for each distance are calculated, however, if dose calculations for the vicinity of the casks indicate substantial azimuthal variations, then a bounding correction factor is applied to those calculated dose rates.

- Dose rates in the direct vicinity of the cask
    - More realistic, though still bounding, modeling assumptions are used
    - Azimuthal, axial and radial dose rate distributions are evaluated, so operations can be planned and performed with special considerations of areas with higher or lower dose rates around the cask

Effects of variations in the cask content are determined, specifically with respect to the non-fuel hardware (BPRAs, TPDs, RCCAs, and NSAs) loaded with the assemblies which has a substantial impact on some dose locations. Therefore, if necessary, radiation protection activities can be tailored to the specific content of an individual cask.

The following information is included in this chapter:

- A description of the shielding features of the STC.
- The acceptance criteria used.
- A description of the source terms.
- A general description of the shielding analysis methodology.
- A description of the analysis assumptions and results for the STC and HI-TRAC evaluations.
- Analyses of controlled area boundary dose rates for normal, off-normal (10 CFR 72.104) and accident conditions (10 CFR 72.106).
- Analyses of dose to the individual member of public (on-site) for normal and off-normal conditions (10 CFR 20.1301).
- Evaluation of occupational exposures per the ALARA principles in accordance with 10CFR 20.1101(b).

The principal sources of radiation in the STC are:

- Gamma radiation originating from the following sources

    1. Decay of radioactive fission products
    2. Hardware activation products generated during core operations
    3. Secondary photons from neutron capture in fissile and non-fissile nuclides

- Neutron radiation originating from the following sources

    1. Spontaneous fission
    2. α,n reactions in fuel materials
    3. Secondary neutrons produced by fission from subcritical multiplication

Shielding from gamma radiation is provided by the steel and lead shielding structures of the STC and HI-TRAC. In the STC design, Metamic is used in the basket structure as a neutron absorber, while water is used as a neutron shielding material in the HI-TRAC.

The shielding analyses were performed with MCNP5 [M.G] developed by Los Alamos National Laboratory (LANL). The source terms for the design basis fuels were calculated with the SAS2H [M.I] and ORIGEN-S [M.H] sequences from the SCALE 4.3 code system and were previously utilized in HI-STORM 100 FSAR [K.A]. These are principally the same codes that were used in Holtec's approved Storage and Transportation FSARs and SAR under separate docket numbers [K.A, K.B]. Detailed descriptions of the source term calculations and the MCNP models are presented in Sections 7.2 and 7.3, respectively.

The design basis fuel assemblies are Babcock & Wilcox (B&W) 15x15 fuel assemblies. While the fuel assembly type used at Indian Point Unit 3 is Westinghouse 15x15, evaluations have shown that the B&W 15x15 fuel assembly design is bounding when compared to other PWR fuel assembly designs and classes. The design basis fuel assemblies are employed for the HI-TRAC dose rates evaluations. However for the bare STC dose rate calculations the axial configuration of the Westinghouse 15x15 assemblies is utilized, still with the design basis B&W 15x15 source terms, assembly weight and assembly cross-section. This Westinghouse 15x15 axial configuration is used for the bare STC dose evaluations in order to obtain more realistic dose

rates from the top fittings of the assemblies. Note that the B&W 15x15 fuel assembly design was used as the bounding design basis assembly in the HI-STORM 100 FSAR [K.A].

7.1 SHIELDING DESIGN

7.1.1 Design Features

The principal design features of the STC with respect to radiation shielding consist of the fuel basket and STC shell. The main shielding is provided by the canister body which includes steel and lead for gamma shielding. Metamic is included in the fuel basket for neutron absorption. Additionally, the minimum soluble boron level required by the TS is considered in some of the evaluations (bare STC cases only). The drawings that describe the STC and show its dimensions can be found in Chapter 1.

For the analyses with the STC in the HI-TRAC, minimum dimensions of components important for dose rates specified in the drawings are used. However, in the calculations for the bare STC, as-built conditions are used, with one conservative exception. This was done to determine more realistic doses in support of developing the operational RP procedures and practices. With respect to manufacturing tolerances of the STC, specifically the tolerances of the radial steel, it is important to note that larger than usual tolerances were selected to provide the flexibility that is necessary to ensure the crucial weight limit of the system is met. As the STC has now been already manufactured in the shop, as-built dimensions can be and are used for dose evaluations when STC is outside of the HI-TRAC. The only difference found between the as-built and the nominal dimension is the thickness of the STC inner shell. Nominal dimension of the STC inner shell is 1", whereas the as-built dimension is 3/4" with 3/16" of weld overlay. As machining is performed on this weld overlay, the 3/16" thickness of the weld overlay is neglected. Tables 7.4.1 to 7.4.8, which report dose rates from the bare STC, contain result with this as-built dimension. In addition to the manufacturing records for the individual parts of the STC, a simple verification is performed based on the weight of the as-built STC (empty, without lid) in comparison with the weights that would be consistent with nominal and minimum radial thicknesses. Results of this comparison are as follows:

Condition	Weight (lbs)
Nominal Dimensions	44,200
Minimum Dimensions	39,500
As-modeled (Nominal Dimensions, except 3/4" for inner shell)	42,200
As-built (measured)	44,400

The comparison shows that the as-built weight exceeds the as-modeled weight, and is in fact close to the nominal dimensions. The as-built weight is also significantly higher than the weight for the minimum dimensions. Using the as-built dimensions in the model and neglecting the weld overlay as discussed above is therefore appropriate and conservative.

7.1.2 Loading Pattern

The utilized source terms, shown in Table 7.1.1 and described in Section 7.2, represents the currently discharged fuel at Unit 3 spent fuel pool. In other words, most of the discharged assemblies in the Indian Point Unit 3 spent fuel pool (SFP) are bounded by the five loading patterns presented in Table 7.1.1. The comparatively short cooled assemblies currently present in the Unit 3 SFP will also be covered by these selections with additional cooling time. These loading patterns are selected to provide maximum bounding dose scenarios and therefore may result in slightly higher than allowed heat load for the STC (as shown in Table 7.1.1). Therefore, these loading patterns should be used in conjunction with the heat load restriction for each basket location. Additionally, enrichments in Table 7.1.1 can be treated as rounded to one decimal place. As determined in Section 7.4, loading pattern 3 or 4 results in the bounding dose rates depending on the dose locations and whether the STC is outside or inside the HI-TRAC.

7.1.3 Acceptance Criteria

As discussed in Chapter 3, the acceptance criteria for the controlled area boundary dose evaluation is 10 CFR 72.104 [A.C] for normal and off-normal conditions and 10 CFR 72.106 [A.C] for accident conditions. The acceptance criteria from 10 CFR 72 were used rather than 10 CFR 100, since the 10 CFR 72 regulations are more restrictive. The 10 CFR 72 regulations are summarized below.

Normal and off-normal conditions requirements from 10 CFR 72.104.

> During normal operations and anticipated occurrences, the annual dose equivalent to any real individual who is located beyond the controlled area, must not exceed 25 mrem to the whole body, 75 mrem to the thyroid and 25 mrem to any other critical organ.

Accident condition requirements from 10 CFR 72.106.

> Any individual located on or beyond the nearest boundary of the controlled area may not receive from any design basis accident the more limiting of a total effective dose equivalent of 5 rem, or the sum of the deep-dose equivalent and the committed dose equivalent to any individual organ or tissue (other than the lens of the eye) of 50 rem. The lens dose equivalent shall not exceed 15 rem and the shallow dose equivalent to skin or to any extremity shall not exceed 50 rem. The minimum distance from the spent fuel or high level radioactive waste handling and storage facilities to the nearest boundary of the controlled area shall be at least 100 meters.

In these calculations, 160 m is used as the distance to the controlled area boundary.

10 CFR 20.1301 (a) and (b) [A.B] are used as the acceptance criteria for dose to an individual member of a public (on-site) during the transfer operation. Regulations (a) and (b) of 10 CFR 20.1301 are as follows.

> (a) Each licensee shall conduct operations so that —
>
> (1) The total effective dose equivalent to individual members of the public from the licensed operation does not exceed 0.1 rem (1 mSv) in a year, exclusive of the dose contributions from background radiation, from any administration the individual has

received, from exposure to individuals administered radioactive material and released under § 35.75, from voluntary participation in medical research programs, and from the licensee's disposal of radioactive material into sanitary sewerage in accordance with § 20.2003, and

(2) The dose in any unrestricted area from external sources, exclusive of the dose contributions from patients administered radioactive material and released in accordance with § 35.75, does not exceed 0.002 rem (0.02 millisievert) in any one hour.

(b) If the licensee permits members of the public to have access to controlled areas, the limits for members of the public continue to apply to those individuals.

A 20 m distance from the surface of the HI-TRAC (restricted area) is used for this purpose. Additionally, a 60 m restricted area is required surrounding the fuel storage building for members of public during STC movement from the pool to the HI-TRAC and vice versa.

Entergy is proposing controls that will provide reasonable assurance that both the public and occupational dose limits in 10 CFR Parts 20, 50 and 100 (via compliance with the intent of Part 72 limits) are not exceeded. Compliance with the intent of Part 72 is demonstrated by adopting the Part 72 numerical limits where appropriate. In addition, procedures and engineering controls based upon sound radiation protection principles to achieve occupational doses and doses to members of the public that are as low as reasonably achievable (ALARA) will be used per 10 CFR 20.1101(b) [A.B].

Table 7.1.1
ANALYZED LOADING CONFIGURATIONS (NOTE 1)

Loading Pattern	Region	Burnup (GWD/ MTU)	Cooling Time (years)	Initial Enrichment (wt% UO_2)	Heat Load Per Assembly (kW) [L.G]	Maximum Allowable Heat Load in Each Location (kW) [L.H]
1	Outer 8 cells	40	25	2.3	0.53	0.65
	Inner 4 cells	55	10	3.4	1.12	1.12
2	Outer 8 cells	45	20	3.2	0.66	0.65
	Inner 4 cells	45	10	3.2	0.85	1.12
3	Outer 8 cells	45	20	3.2	0.66	0.65
	Inner 4 cells	55	10	3.4	1.12	1.12
4	Outer 8 cells	40	12	3.2	0.68	0.65
	Inner 4 cells	45	10	3.6	0.84	1.12
5	Outer 8 cells	40	12	3.2	0.68	0.65
	Inner 4 cells	45	14	3.4	0.74	1.12

Note 1: The burnup, cooling time and enrichment in the above table are directly used in the dose analyses. For loading purposes, the burnups should be interpreted as maximum allowable burnups, while the cooling times and enrichments are minimum allowable cooling and enrichment of the fuel assemblies.

7.2 SOURCE SPECIFICATION

7.2.1 Source Term Selection

The loading configurations presented in Table 7.1.1 and the associated source terms were selected based on a survey of the current Indian Point Unit 3 spent nuclear fuel inventory. The selected configurations represent the most abundant/representative fuel characteristics as well as a bounding source term scenario (Table 7.1.1) from shielding perspective.

The source terms were applied in a regionalized loading scheme to the 12 fuel assembly locations available in the STC. The regionalized loading pattern was utilized to more easily be able to transfer hotter fuel in the spent nuclear fuel storage pool by taking advantage of self-shielding effects. The source terms with the higher cooling times are assigned to the eight outer fuel assembly locations in the STC, while the source terms with the lower cooling time are assigned to the four inner fuel assembly locations.

The mass loading of the design basis fuel used in the shielding evaluations, B&W 15x15, is 495.5 kg of U (562.0 kg of UO_2) [L.G]. This bounds all of Indian Point fuel types.

Indian Point utilizes fuel with axial blankets. However, this is not considered in the shielding analyses. Instead, the entire length of the active fuel region is modeled as fully enriched fuel, together with the corresponding axial burnup profile (taken from the HI-STORM FSAR [K.A]). This results in substantially higher burnups at the ends than fuel with axial blankets would provide, in conjunction with marginally lower burnups along the balance of the active region. A study is performed in Reference [L.G] to quantify the effect of axial blanket on external dose rates. As expected, it is found that the axial blanket would have resulted in a maximum 2.8% dose rates increase at the axial midsection of the STC with corresponding decrease in dose rates at all other locations. The effect of the axial blanket on the dose rates is expected to be negligible for greater than 5 m distances from the cask. Overall this would have a very small effect on dose rates, specifically considering the large contribution from NFH to the dose rates.

7.2.2 Principal Sources of Radiation

The principal sources of radiation in the STC are the gamma and neutron radiation originating from various sources (e.g., decay of radioactive fission products, spontaneous fission). The neutron and gamma source terms were calculated with the SAS2H [M.I] and ORIGEN-S [M.H] modules of the SCALE 4.3 code system using the 44-group library and have been previously utilized in the HI-STORM 100 FSAR [K.A]. In performing the SAS2H and ORIGEN-S calculations, a single full power cycle was used to achieve the desired burnup. All source term calculations were also performed assuming an infinite array of assemblies during irradiation. The design basis fuel assembly characteristics used in the computations as well as the modeling approach of the gamma and neutron sources are from the FSAR [K.A].

Table 7.2.1 provides the gamma source in MeV/s and photons/s as calculated with SAS2H and ORIGEN-S for the bounding burnup and cooling time combinations for the B&W 15x15 assembly design. Standard Review Plan NUREG-1617 [C.F] states that: "In general, only

gammas from approximately 0.8 to 2.5 MeV will contribute significantly to the external radiation levels". Based on this statement it was considered for the dose calculations for the HI-STORM 100 [K.A] that using a range of 0.7 to 3.0 MeV would be sufficient. However, upon investigation [K.A], it was determined that the energy group from 0.45 to 0.7 MeV does noticeably contribute to the external dose rate. Hence, photons with energies in the range of 0.45 to 3.0 MeV are included in the shielding calculations. Photons with energies below 0.45 MeV are too weak to penetrate the steel of the cask, and photons with energies above 3.0 MeV are too few to contribute significantly to the external dose.

The primary source of gamma emitting activity in the non-fuel regions of an assembly arises from the activation of ^{59}Co to ^{60}Co. Table 7.2.2 provides the ^{60}Co activity utilized in the shielding calculations in the non-fuel regions of the assemblies for the bounding loading patterns. A cobalt-59 impurity level of 0.5 g/kg is used for non-fuel hardware pieces for comparatively recent assemblies (less than 20 years cooled or post 1989 assemblies). For older assemblies (20 or more years of cooling or pre 1989 assemblies) 1.2 gm/kg of cobalt-59 is utilized. These values are maximum cobalt-59 content values of the Indian Point Unit 3 fuel assemblies based on information from the fuel manufacturer. Six pre 1989 assemblies in the Unit 3 pool contain inconel grid spacers. Therefore, inconel grid spacers are conservatively considered for all 4 assemblies in the inner region of the basket with 10 years cooling. The cobalt-59 impurity is conservatively assumed to be 4.7 gm/kg for inconel based on [K.A]. Further, the FSAR provides the scaling factors used in calculating the ^{60}Co source along with a detailed description of the masses of the non-fuel regions.

Another source arises from (n,γ) reactions in the material of the STC. This source of photons is properly accounted for in MCNP5 when a neutron calculation is performed in a coupled neutron-gamma mode.

The neutron sources calculated for the design basis fuel assembly in neutrons/sec are listed in Table 7.2.3 for the bounding loading patterns.

Burnable poison rod assemblies (BPRAs) including wet annular burnable absorbers (WABAs), thimble plug devices (TPDs), rod cluster control assemblies (RCCAs) and neutron source assemblies (NSAs) are used as the non-fuel hardware (NFH) for the analyses presented in this licensing report. ITTRs (instrument tube tie rods), which are installed after core discharge and do not contain radioactive material, may also be stored in the assembly with other NFH [K.A]. ITTRs are authorized for unrestricted storage in the STC. Table 7.2.8 presents allowed post-irradiation burnup and cooling time combinations for all NFH. BPRAs and TPDs may be stored in any fuel location (up to 12 per transfer) while RCCAs are restricted to the four central positions inside the STC basket (up to 4 per transfer) and only a single NSA is permitted, also restricted to one of the four central locations. BPRAs are made of stainless steel in the region above the active fuel zone and may contain a small amount of Inconel in this region. Within the active fuel zone the BPRAs may contain 2-24 rodlets which are burnable absorbers clad in either Zircaloy or stainless steel. The stainless steel clad BPRAs create a significant radiation source (Co-60). BPRAs are burned with a fuel assembly in core and are not reused. In fact, many BPRAs are removed after one or two cycles before the fuel assembly is discharged. Therefore, the achieved burnup for BPRAs is typically lower than that of the fuel assemblies. The TPDs are not used in all assemblies in a reactor core but are reused from cycle to cycle. Therefore, these devices can achieve burnups in excess of the fuel assemblies. Reference [K.A] discusses the

determination of a design basis BPRA and TPD for use in the shielding calculations. Bounding BPRA and TPD are determined by analyzing different style BPRAs and TPDs [K.A].

For BPRAs and TPDs, the cobalt-59 impurity level was conservatively assumed to be 1.2 gm/kg for stainless steel and 4.7 gm/kg for Inconel [K.A, L.G]. The corresponding source term calculations were performed by irradiating the appropriate mass of steel and Inconel using the flux calculated for the design basis B&W 15x15 fuel assembly.

The bounding BPRA and TPD are restricted to 50 curies Co-60 and 0.52 watts for each TPD and 895 curies Co-60 and 9.03 watts for each BPRA [K.A]. These restrictions in decay heat and activity can be achieved by selecting appropriate burnup and cooling time combinations for the respective devices (Table 7.2.8). The mass of bounding BPRAs and TPDs [K.A] in the various portions of the fuel assembly is described in Table 7.2.4. Table 7.2.5 shows the activities of Co-60 that are calculated for a single BPRA or TPD in each region of the fuel assembly (e.g. incore, top nozzle).

RCCAs are also described in Reference [K.A]. Similar to BPRAs and TPDs, the cobalt-59 impurity level is conservatively assumed to be 4.7 gm/kg for Inconel. The RCCA source terms are based on 630,000 MWD/MTU burnup and 5.0 years of cooling. The only significant source from the activation of steel is Co-60 and the only significant source from the activation of AgInCd is between 0.3-1.0 MeV.The manners in which the RCCAs are utilized vary from plant to plant. Some utilities maintain the RCCAs fully withdrawn during normal operation while others may operate with a bank of rods partially inserted during normal operation. Indian Point Unit 3 typically operates with control rods fully withdrawn during full power operation. Nevertheless, the configuration with 10% inserted control rods for the entire residence time of the control rod in the core from [K.A] is used in this report. Table 7.2.6 provides the RCCA configuration [K.A] that was modelled in MCNP. Table 7.2.7 presents the source terms that were calculated for a single RCCA. Hafnium inserts are bounded by RCCAs as the source from Hafnium is bounded by the source from AgInCd [K.A].

Neutron source assemblies (NSAs) are used in reactors for startup. HI-STORM 100 FSAR [K.A] contains detailed description of NSAs and their loading restrictions. During in-core operations, the stainless steel and Inconel portions of the NSAs become activated, producing a significant amount of Co-60. Consistent with the HI-STORM 100 FSAR only a single NSA is permitted for storage in the STC. This restriction concerning the number of NSAs is being applied to all types of NSAs. In addition, NSAs are required to be stored in the inner region of the STC basket. The mass of bounding NSAs [L.P] in the various portions of the fuel assembly is described in Table 7.2.4. Table 7.2.5 shows the activities of Co-60 that are calculated for a single NSA in each region of the fuel assembly (e.g. incore, top nozzle). The activities listed in Table 7.2.5 are based on 360,000 MWD/MTU burnup and 10.0 years of cooling time for NSAs. The cobalt-59 impurity level was assumed to be 0.5 gm/kg for stainless steel (post 1989) and 4.7 gm/kg for Inconel. Indian Point Unit 3 uses Antimony-Beryllium (Sb-Be) as secondary and Plutonium-Beryllium (Pu-Be) as primary neutron sources. However, the very short half-life of Sb-124, 60.2 days, results in a complete decay of the initial amount generated in the reactor within a few years after removal from the reactor. The Pu-Be, however, have a significantly longer half-life. As a result their source intensity does not decrease significantly. 1.5E+08 neutrons/sec is assumed as the neutron generation rate of the NSA. This is the typical initial neutron production rate for the Pu-Be NSA [L.P].

TABLE 7.2.1

CALCULATED GAMMA SOURCE PER ASSEMBLY

Lower Energy	**Upper Energy**	**40,000 MWD/MTU 12 Year Cooling 3.2 wt% ^{235}U**		**45,000 MWD/MTU 10 Year Cooling 3.6 wt% ^{235}U**		**45,000 MWD/MTU 20 Year Cooling 3.2 wt% ^{235}U**		**55,000 MWD/MTU 10 Year Cooling 3.4 wt% ^{235}U**	
(MeV)	(MeV)	(MeV/s)	(Photons/s)	(MeV/s)	(Photons/s)	(MeV/s)	(Photons/s)	(MeV/s)	(Photons/s)
0.45	0.7	1.09E+15	1.89E+15	1.33E+15	2.32E+15	9.64E+14	1.68E+15	1.63E+15	2.84E+15
0.7	1.0	8.59E+13	1.01E+14	1.64E+14	1.93E+14	2.71E+13	3.19E+13	2.20E+14	2.59E+14
1.0	1.5	4.73E+13	3.78E+13	6.90E+13	5.52E+13	2.74E+13	2.20E+13	9.04E+13	7.23E+13
1.5	2.0	2.47E+12	1.41E+12	3.41E+12	1.95E+12	1.61E+12	9.22E+11	4.36E+12	2.49E+12
2.0	2.5	3.45E+10	1.53E+10	1.34E+11	5.97E+10	8.24E+09	3.66E+09	1.49E+11	6.60E+10
2.5	3.0	2.92E+09	1.06E+09	1.02E+10	3.72E+09	8.21E+08	2.99E+08	1.28E+10	4.65E+09
Total		1.22E+15	2.03E+15	1.57E+15	2.57E+15	1.02E+15	1.73E+15	1.95E+15	3.18E+15

TABLE 7.2.2

CALCULATED ^{60}Co SOURCE FOR NFH

40,000 MWD/MTU 12 Year Cooling 3.2 wt% ^{235}U (Ci/1.0 g of Co-59)	**45,000 MWD/MTU 10 Year Cooling 3.6 wt% ^{235}U (Ci/1.0 g of Co-59)**	**45,000 MWD/MTU 20 years cooling 3.2 wt% ^{235}U (Ci/1.0 g of Co-59)**	**55,000 MWD/MTU 10 years cooling 3.4 wt% ^{235}U (Ci/1.0 g of Co-59)**
33.5	45.7	12.9	55.6

TABLE 7.2.3
CALCULATED NEUTRON SOURCE PER ASSEMBLY

Lower Energy (MeV)	Upper Energy (MeV)	40,000 MWD/MTU 12 Year Cooling 3.2 wt% ^{235}U (Neutrons/s)	45,000 MWD/MTU 10 Year Cooling 3.6 wt% ^{235}U (Neutrons/s)	45,000 MWD/MTU 20 Year Cooling 3.2 wt% ^{235}U (Neutrons/s)	55,000 MWD/MTU 10 Year Cooling 3.4 wt% ^{235}U (Neutrons/s)
1.0E-01	4.0E-01	9.76E+06	1.37E+07	1.15E+07	3.22E+07
4.0E-01	9.0E-01	4.99E+07	7.00E+07	5.86E+07	1.64E+08
9.0E-01	1.4	4.57E+07	6.41E+07	5.38E+07	1.50E+08
1.4	1.85	3.38E+07	4.73E+07	3.98E+07	1.11E+08
1.85	3.0	6.01E+07	8.38E+07	7.07E+07	1.95E+08
3.0	6.43	5.42E+07	7.58E+07	6.37E+07	1.77E+08
6.43	20.0	4.78E+06	6.70E+06	5.61E+06	1.58E+07
Totals		2.58E+08	3.61E+08	3.04E+08	8.46E+08

Table 7.2.4

DESCRIPTION OF DESIGN BASIS BURNABLE POISON ROD ASSEMBLY, THIMBLE PLUG DEVICE AND NEUTRON SOURCE ASSEMBLY

Region	BPRA	TPD	NSA
Upper End Fitting (kg of steel)	2.62	2.3	3.9
Upper End Fitting (kg of Inconel)	0.42	0.42	0.64
Gas Plenum Spacer (kg of steel)	0.77488	1.71008	2.351
Gas Plenum Springs (kg of steel)	0.67512	1.48992	2.049
In-core (kg of steel)	13.2	N/A	12

Table 7.2.5

DESIGN BASIS COBALT-60 ACTIVITIES FOR BURNABLE POISON ROD ASSEMBLIES, THIMBLE PLUG DEVICES, AND NEUTRON SOURCE ASSEMBLY

Region	BPRA	TPD	NSA
Upper End Fitting (curies Co-60)	32.7	25.21	34.77
Gas Plenum Spacer (curies Co-60)	5.0	9.04	10.67
Gas Plenum Springs (curies Co-60)	8.9	15.75	18.6
In-core (curies Co-60)	848.4	N/A	544.88

Table 7.2.6

DESCRIPTION OF DESIGN BASIS RCCA
CONFIGURATIONS FOR SOURCE TERM CALCULATIONS

Axial Dimensions Relative to Bottom of Active Fuel			Flux Weighting Factor	Mass of cladding (kg Inconel)	Mass of absorber (kg AgInCd)
Start (in)	Finish (in)	Length (in)			
Configuration 1 - 10% Inserted					
0.0	15.0	15.0	1.0	1.32	7.27
15.0	18.8125	3.8125	0.2	0.34	1.85
18.8125	28.25	9.4375	0.1	0.83	4.57

Table 7.2.7

DESIGN BASIS SOURCE TERMS FOR RCCA CONFIGURATIONS

Axial Dimensions Relative to Bottom of Active Fuel			Photons/sec from AgInCd			Curies Co-60 from Inconel
Start (in)	**Finish (in)**	**Length (in)**	**0.3-0.45 MeV**	**0.45-0.7 MeV**	**0.7-1.0 MeV**	
Configuration 1 - 10% Inserted						
0.0	15.0	15.0	1.91e+14	1.78e+14	1.42e+14	1111.38
15.0	18.8125	3.8125	9.71e+12	9.05e+12	7.20e+12	56.50
18.8125	28.25	9.4375	1.20e+13	1.12e+13	8.92e+12	69.92

TABLE 7.2.8
NON-FUEL HARDWARE BURNUP AND COOLING TIME LIMITS (Notes 1 and 2)

Post-irradiation Cooling Time (years)	Maximum Burnup (MWD/MTU)			
	BPRAs and WABAs	TPDs	RCCAs and Hafnium Inserts	NSAs
≥ 6	≤ 20000	-	≤ 630000	-
≥ 7	-	≤ 20000	-	-
≥ 8	≤ 30000	-	-	-
≥ 9	≤ 40000	≤ 30000	-	-
≥ 10	≤ 50000	≤ 40000	-	≤ 360000
≥ 11	≤ 60000	≤ 45000	-	-
≥ 12	-	≤ 50000	-	-
≥ 13	-	≤ 60000	-	-
≥ 14	-	-	-	-
≥ 15	-	≤ 90000	-	-
≥ 16	-	≤ 630000	-	-
Allowed Quantity and Location	Up to twelve (12) per transfer in any location	Up to twelve (12) per transfer in any location	Up to four (4) per transfer in Cells 1, 2, 3, and/or 4	One per transfer in Cell 1, 2, 3, or 4

NOTE:

1. Linear interpolation between points is permitted
2. Non-fuel hardware burnup and cooling time limits are not applicable to Instrument Tube Tie Rods (ITTRs), since they are installed post-irradiation

7.3 SHIELDING MODEL

The shielding analysis of the STC was performed with MCNP5 [M.G]. MCNP is a Monte Carlo transport code that offers a full three-dimensional combinatorial geometry modeling capability including such complex surfaces as cones and tori. This means that no gross approximations were required to represent the STC in the shielding analysis. MCNP is the same code that has been used for shielding calculations by Holtec in previous dry storage and transportation systems licensing calculations.

The MCNP model of the HI-TRAC for normal conditions have the jackets filled with water, but does not credit the water for the hypothetical accident condition.

In the shielding analysis, the STC and the HI-TRAC are only partially filled with water leaving a gap under each lid. The gaps are needed to provide an expansion zone for the water and also allow the STC lid operations to occur unhindered by water.

The following assumptions are made in the MCNP model:

- It is assumed in this shielding analysis that the STC is filled with water to a height of 159.775 inches (top of the fuel assembly). In other words, there is a 9.87 in. tall gap on top of the fuel basket. A gap is needed to provide an expansion zone for the water and also allow the STC lid operations to occur unhindered by water.

- STC (when STC is outside HI-TRAC) is modeled with a 13/16 inch gap between the STC lid and the flange. STC will be lifted from the pool with untightened bolts which create this gap. All the dose rates from the STC are calculated with this gap.

- Borated water is used with 2000 ppm of soluble boron to fill the inside cavity of the STC. Borated water is only used for the bare STC dose evaluation cases. For dose calculation purpose of the HI-TRAC, containing the STC, fresh water is used to fill the STC cavity, annulus between STC and HI-TRAC and HI-TRAC jacket. This more conservative approach is taken for the HI-TRAC as the HI-TRAC is travelling outside the fuel storage building.

- The bottom portion of the STC lid is tapered. The loss of material due to this tapered portion is accounted by modeling a 0.09 inch gap between the STC lid and the flange. This gap is calculated by averaging the maximum off-set of the taper (0.11) and the existing gap (0.06 inch) between the bottom portion of the lid and the STC flange wall.

- As built dimensions [L.G.] are used for the dose rates calculations from the STC. For the inner surface of the STC the extra material provided by the weld overlay is neglected. For dose rates calculations from the HI-TRAC containing the STC, minimum dimensions of the STC are used [L.G.]

- An additional steel ring on the underside of the STC lid (3" thick and 6" high) is used to shield gamma streaming from the top fittings of the assemblies through the gap between the STC lid and flange. In the MCNP models this ring is only utilized for the bare STC dose calculations and is not modeled for HI-TRAC dose calculations. Note that the ring is

split to avoid interference with the vent and drain port block. This is represented correctly in the shielding models.

- The design basis fuel assemblies are employed for the HI-TRAC dose rates calculations. However for the purpose of the bare STC dose rates calculations the axial configuration of the Westinghouse 15x15 assemblies is utilized, still together with the design basis B&W 15x15 source terms, assembly weight and assembly cross-section. The design basis B&W 15x15 assemblies are slightly longer than the Westinghouse 15x15 assembly, which may result in inaccurate Co-60 dose rates (from the top fittings of the assemblies) on the surface of the gap between the STC lid and flange. Therefore to provide the Radiation Protection team and the workers with more accurate dose information on and adjacent to this gap the actual height of the fuel assemblies of the Indian Point Unit 3 is applied.

- For dose rates calculations from STC, masses of BPRAs, TPDs, and NSAs (NFH) are accounted for in the shielding models, whereas their masses are not credited for the HI-TRAC dose rates calculations.

- The taper of the STC base plate is not modeled.

- The STC centering device is not modeled in the MCNP, i.e. the entire annular space between the STC and HI-TRAC is filled with water up to the fill height of this space.

- It is assumed that the HI-TRAC is partly filled with water, containing a 9.25 in. tall gap under the lid. A gap is needed to provide an expansion zone for the water. The water level reaches the top of the STC lid, which is the highest allowed due to operation requirements. Note that the water level could in reality be slightly lower. This will, however, have a very minor impact on the dose rate results presented in this document.

- The basket is modeled without any lifting or "operational" features/materials of the STC, as these would not impact the dose rates significantly.

- The HI-TRAC was conservatively modeled without the lid.

- The HI-TRAC representation in MCNP is simplified without any lifting or operational features included. This simplified representation is sufficient for these calculations and the dose rate locations of interest.

- The 0.035 in. thick steel sheathing [L.G] on the neutron absorber was conservatively omitted in the MCNP model of the basket.

7.3.1 Configuration of Shielding and Source

Chapter 1 provides the drawings that describe the STC and the HI-TRAC. These drawings, together with as-built dimensions, were used to create the MCNP models used in the radiation transport calculations.

7.3.1.1 Shielding Configuration

The normal conditions of shielding configuration for the STC and the STC placed inside the HI-TRAC is shown in Figures 7.3.1 through 7.3.7. Steel and lead are considered as shielding materials for the STC shielding design. The fuel basket is modeled with steel and Metamic (see Chapter 1). Evaluations of azimuthal dose variations are performed by adding cylindrical tally locations around the STC and HI-TRAC. Figure 7.3.1 presents the cross-section view of the STC with 12 basket locations and the cylindrical tallies on the surface used to estimate the azimuthal variance of the dose rates on the surface. Azimuthal variance is accounted up to 5 m distance from the STC surface, which is shown in Figure 7.3.2. Additionally, axial segmentations of surface and cylinder tallies are applied to evaluate axial dose profiles. Figure 7.3.3 depicts the axial orientation of the STC with the ring used to shield gamma streaming from the top fittings of the assemblies through the gap between the STC lid and the flange. Figure 7.3.4 presents a detailed view of the gap modeled between the lid and the STC flange top. This same Figure also presents the gap modeled between the flange wall and the STC lid to account for the material loss due to the taper at the bottom of the lid. Figure 7.3.5 shows the cross section view of the split steel ring used to block the gamma streaming through the gap. It can be seen from Figures 7.3.3 and 7.3.7 that the STC and HI-TRAC are both partially filled with water and contain gaps under the lids (to provide an expansion zone for the water). Figure 7.3.6 depicts the cross-section view of the HI-TRAC containing the STC inside. Figure 7.3.6 also presents the cylindrical tallies utilized for the HI-TRAC for estimating azimuthal variance surrounding the HI-TRAC. For HI-TRAC, azimuthal tallies are used up to 1 m from the surface of the HI-TRAC.

The hypothetical accident shielding configuration for the HI-TRAC is the same as for normal conditions except that the water in the jackets or water in the jacket and water in the annular region between the HI-TRAC and STC is not credited. Figure 7.3.8 depicts the tip over accident with STC off-center within the HI-TRAC due to the crushing of the centering assembly. Note that centering assembly is not modeled in MCNP, as noted earlier.

7.3.1.2 Fuel and Source Configuration

Design basis fuel assemblies are modeled in each of the twelve basket locations. Fuel assembly locations inside the STC are shown in Figures 7.3.1 and 7.3.6. The active fuel region is modeled as a homogenous zone. The bottom nozzle, plenum and top nozzle regions are also modeled as homogenous regions. A study was performed to confirm that the fuel homogenization approach is still applicable when the STC is flooded with moderator [L.G]. The energy distribution of the source term is used explicitly in the MCNP5 model. A different MCNP5 calculation is performed for each of the three source terms (fuel neutron, fuel gamma, and hardware ^{60}Co). The ^{60}Co source in the hardware was assumed to be uniformly distributed over the appropriate regions.

The axial distributions of the fuel source term due to the burnup shape for the B&W 15x15 PWR fuel assemblies are taken from the HI-STORM FSAR [K.A].

7.3.2 Material Properties

Composition and densities of the various materials used in the STC and the HI-TRAC shielding analyses are taken from the HI-STORM FSAR [K.A]. These compositions are also documented in Reference [L.G]. For STC only dose evaluations, the active regions, lower and upper fittings compositions are obtained by adding borated water with the respective material compositions. These compositions (with borated water) are listed in Reference [L.G].

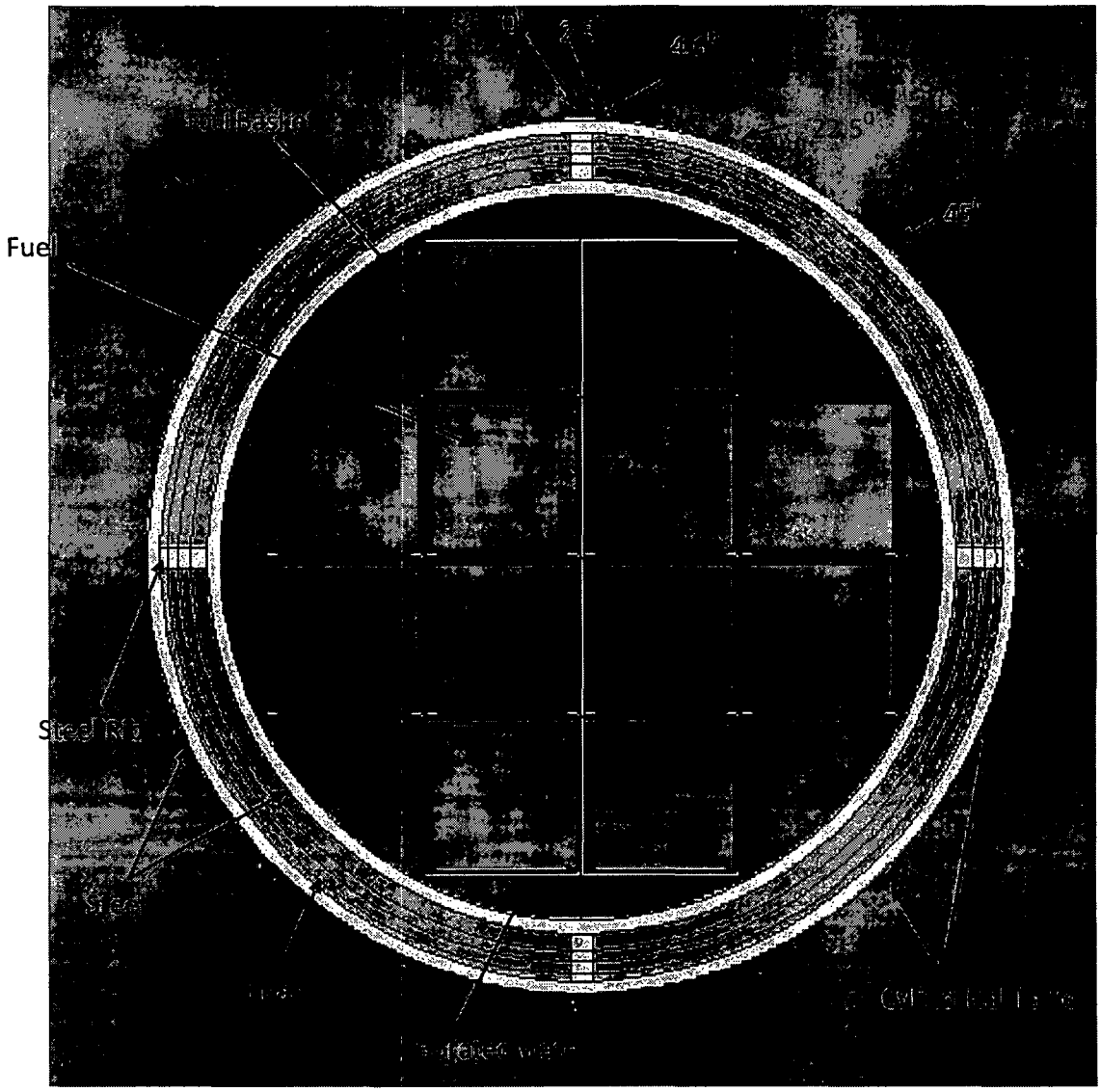

FIGURE 7.3.1

SHIELDED TRANSFER CANISTER WITH 12 BASKET LOCATIONS, CROSS SECTIONAL VIEW AS MODELED IN MCNP

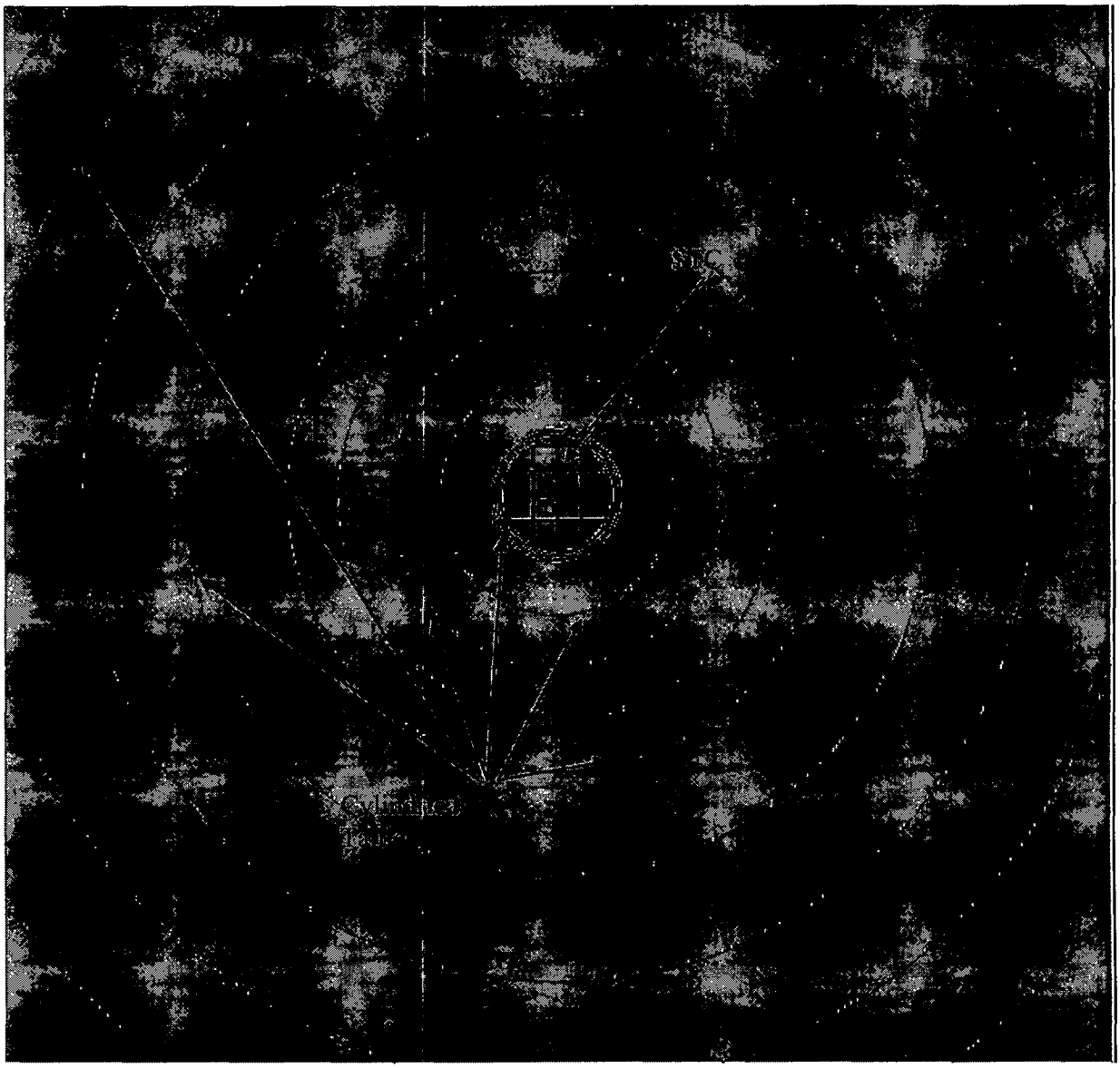

FIGURE 7.3.2

SHIELDED TRANSFER CANISTER WITH AZIMUTHAL TALLY LOCATIONS UP TO 5 METERS, CROSS SECTIONAL VIEW AS MODELED IN MCNP

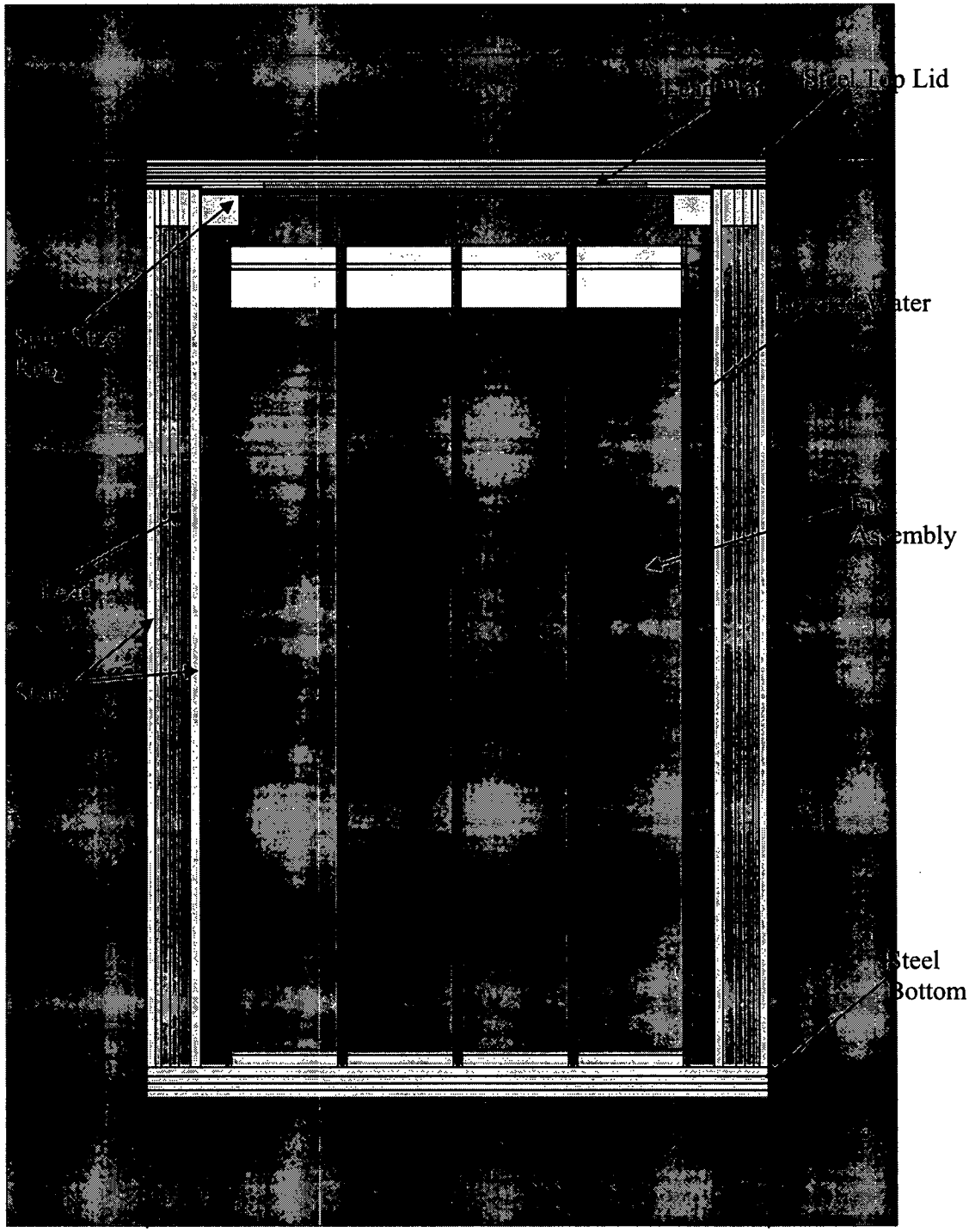

FIGURE 7.3.3

CROSS SECTION ELEVATION VIEW OF SHIELDED TRANSFER CANISTER AND 12 PWR BASKET LOCATIONS AS MODELED IN MCNP
(Note that in order to show the entire STC, the axial and radial scales are not the same in this figure)

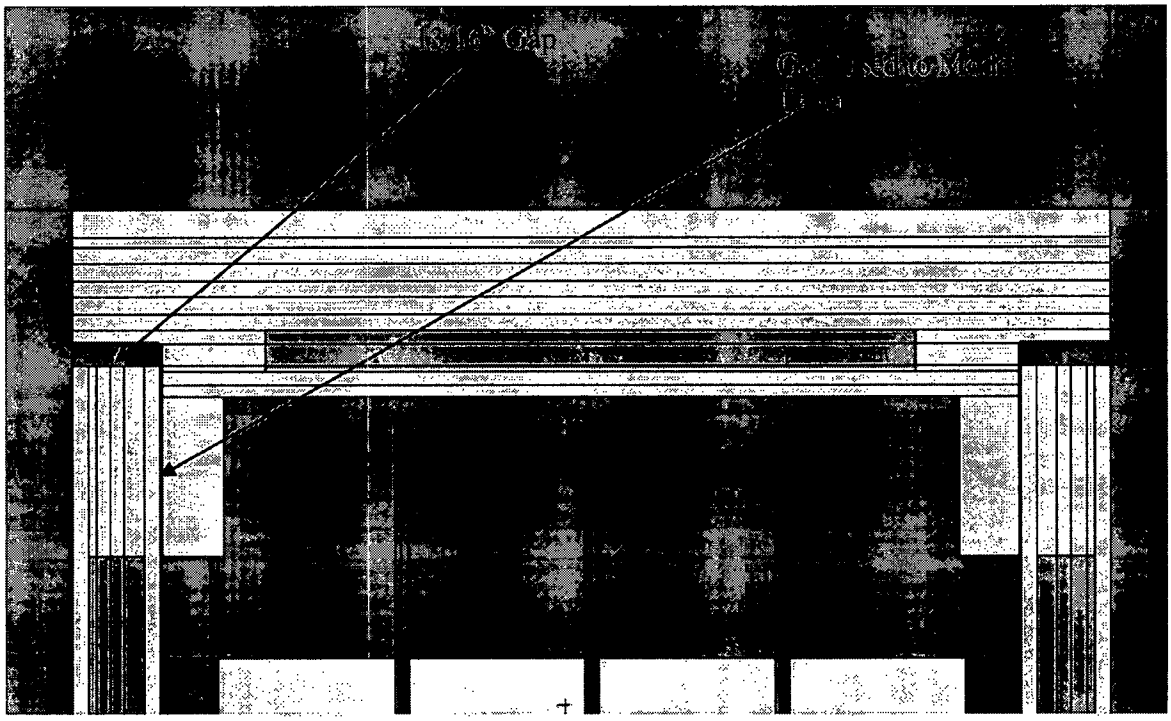

FIGURE 7.3.4

CROSS SECTION ELEVATION VIEW OF SHIELDED TRANSFER CANISTER SHOWING THE GAP BETWEEN THE TOP OF THE FLANGE AND THE TOP LID AND ALSO THE GAP MODELED TO ACCOUNT FOR THE BOTTOM TAPER OF THE TOP LID AS MODELED IN MCNP

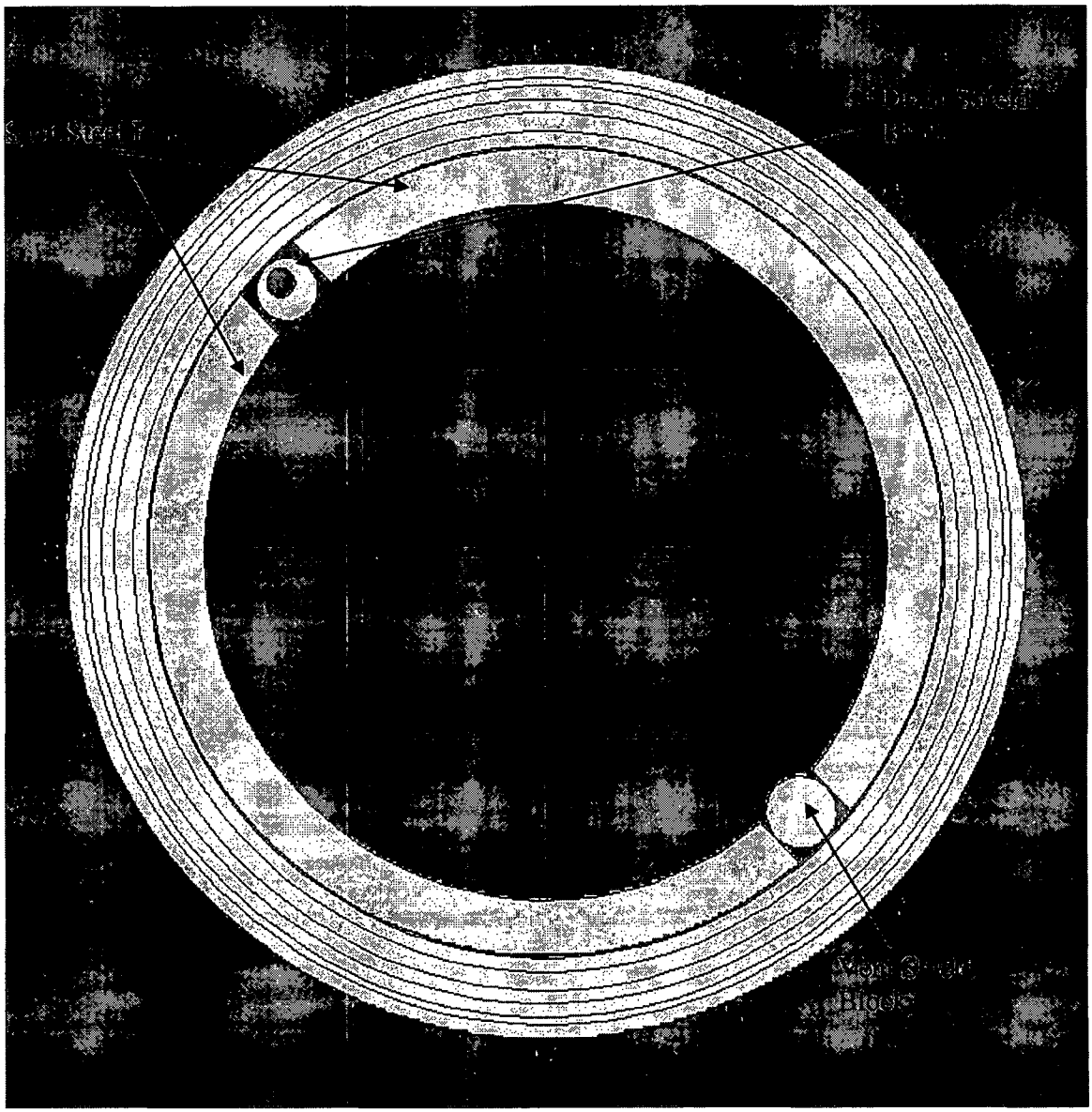

Figure 7.3.5

THE SPLIT STEEL RING AS MODELED IN MCNP

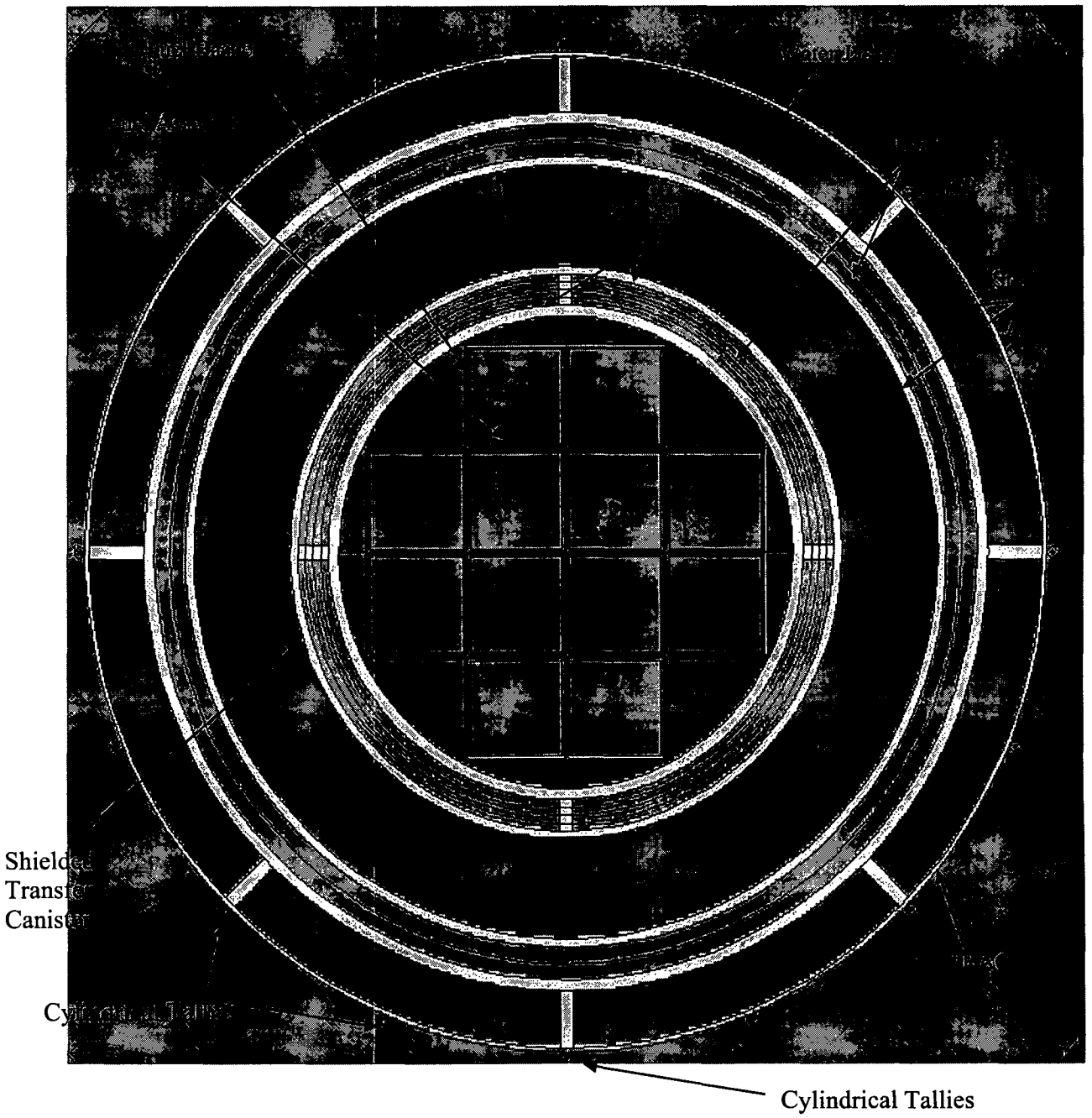

FIGURE 7.3.6

SHIELDED TRANSFER CANISTER INSIDE HI-TRAC 100D – CROSS SECTIONAL VIEW AS MODELED IN MCNP

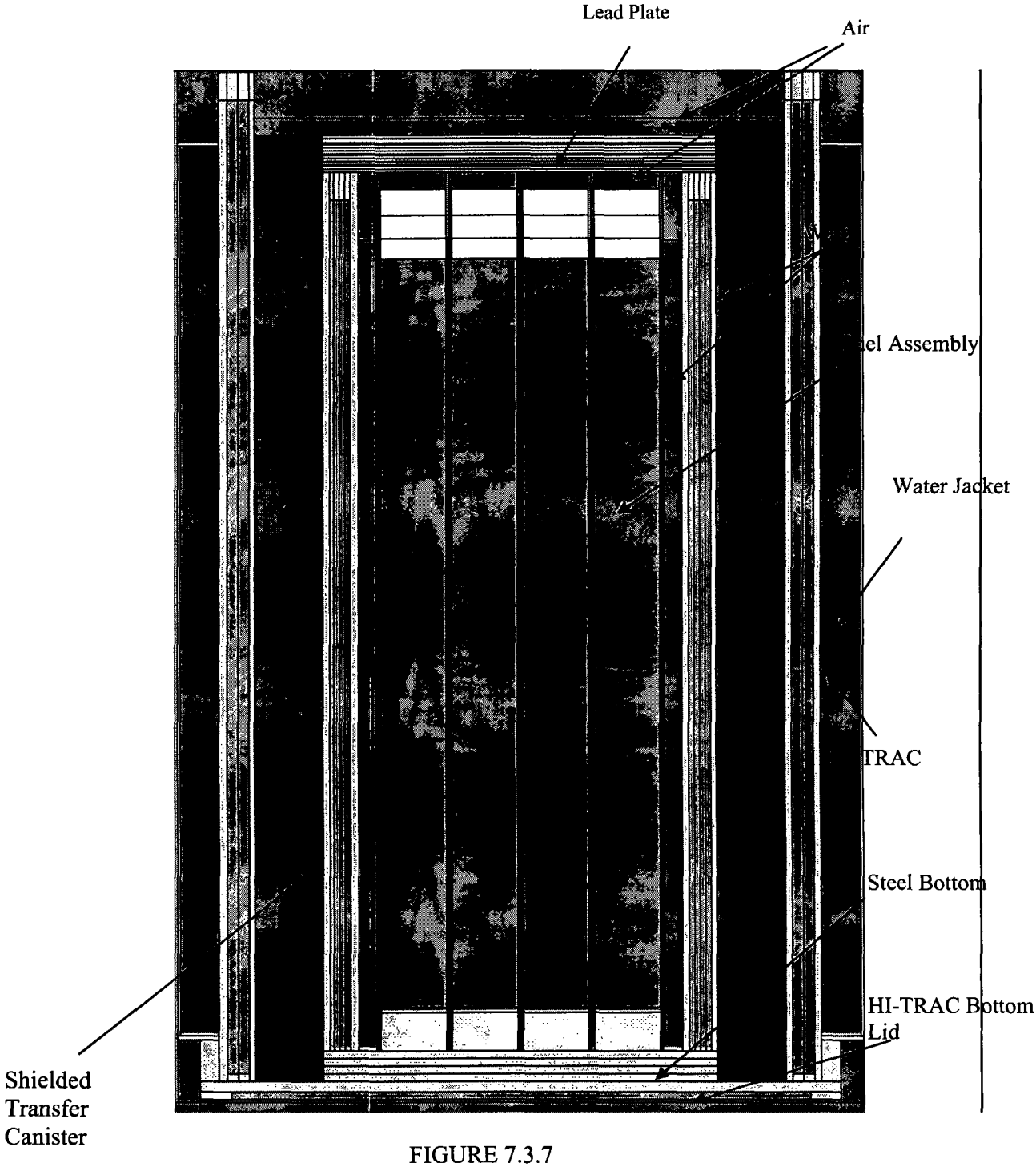

FIGURE 7.3.7

CROSS MID-SECTION ELEVATION VIEW OF THE SHIELDED TRANSFER CANISTER INSIDE HI-TRAC 100D AS MODELED IN MCNP

(Note that in order to show the entire STC and HI-TRAC, the axial and radial scales are not the same in this figure)

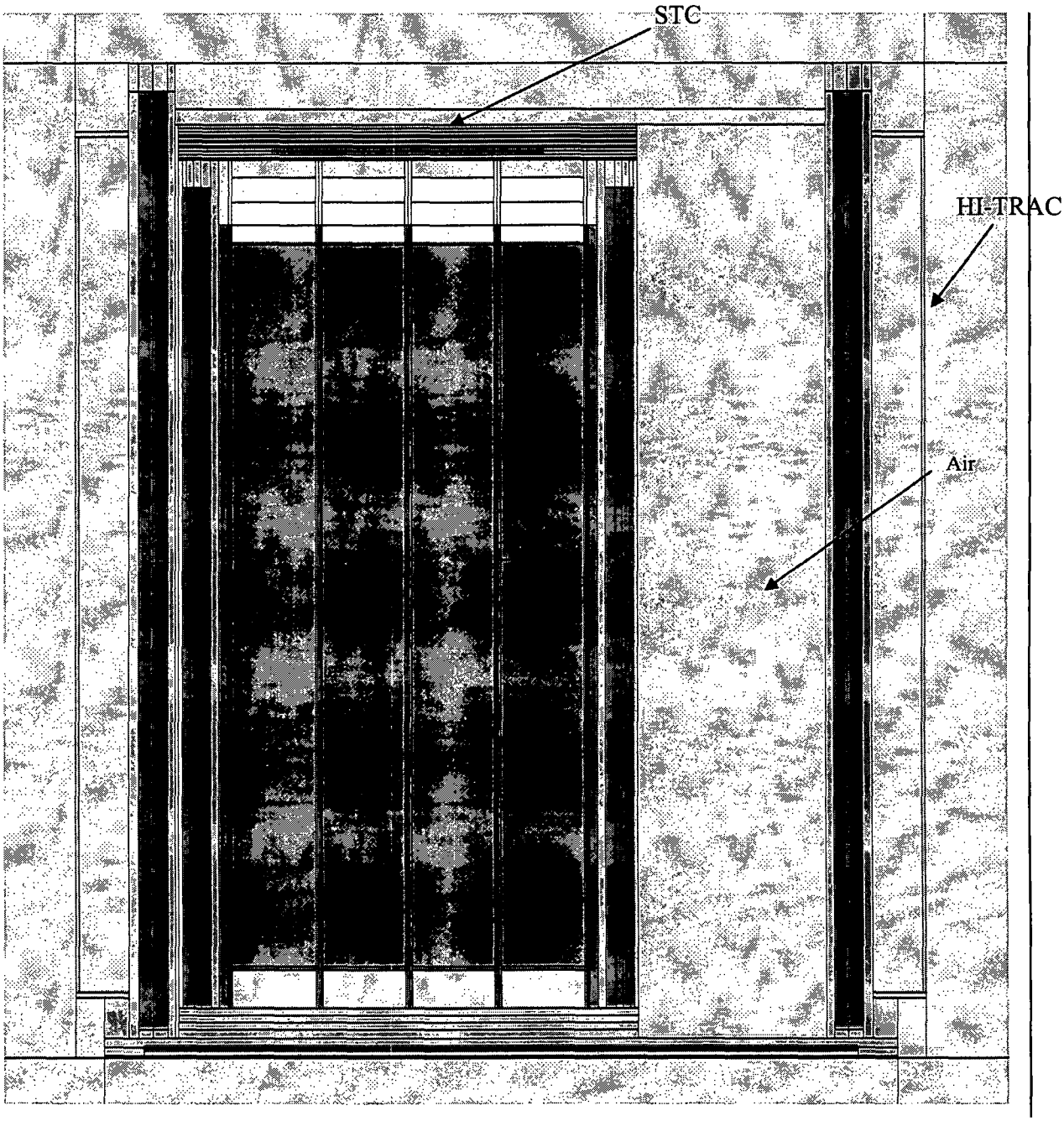

FIGURE 7.3.8

STC OFF-CENTER WITHIN THE HI-TRAC AS MODELED IN MCNP

(Note that in order to show the entire STC and HI-TRAC, the axial and radial scales are not the same in this figure)

7.4 SHIELDING AND ALARA EVALUATION

7.4.1 Methods

The MCNP5 code [M.G] was used for all of the shielding analyses. MCNP is a continuous energy, three-dimensional, coupled neutron-photon-electron Monte Carlo transport code. Continuous energy cross-section data is represented with sufficient energy points to permit linear-linear interpolation between these points. The individual cross section libraries used for each nuclide are those recommended by the MCNP manual. All of these data are based on either ENDF/B-V or ENDF/B-VI data. The large user community has extensively benchmarked MCNP against experimental data. Reference [S.A] is an example of the benchmarking that has been performed. MCNP is the same code that has been used as the shielding code in all of Holtec's dry storage and transportation analyses. Note also that the principal approach in the shielding analysis here is identical to the approach in licensing applications previously reviewed and approved by the USNRC.

The energy distribution of the source term, as described earlier, is used explicitly in the MCNP model. A different MCNP calculation is performed for each of the three source terms (neutron, decay gamma, and ^{60}Co). The axial distribution of the fuel source term is based on the axial burnup distribution in HI-STORM FSAR [K.A]. The ^{60}Co source in the hardware is assumed as uniformly distributed over the appropriate regions.

The dose rates at the various locations were calculated with MCNP using a two-step process. The first step was to calculate the dose rate for each dose location per starting particle for each neutron and gamma group in each basket region for each axial and radial dose location. The second step is to multiply the dose rate per starting particle for each energy group and location (i.e., tally output/quantity) by the source strength (i.e. particles/sec) in that group and sum the resulting dose rates for all groups in each dose location. The normalization of these results and calculation of the total dose rate from neutrons, fuel gammas or Co-60 gammas is performed with the following equation.

$$T_{final} = \sum_{j=1}^{M}\left[\sum_{i=1}^{N}\frac{T_{i,j}}{Fm_i} * F_{i,j}\right] \qquad \text{(Equation 7.4.1)}$$

where,

T_{final} = Final normalized tally quantity (rem/h)
N = Number of groups
M = Number of regions
$T_{i,j}$ = Tally quantity from particles originating in MCNP in group i and region j (particles/cm^2)
$F_{i,j}$ = Fuel Assembly source strength in group i and region j (particles/sec)
Fm_i = Source fraction used in MCNP (sdef card) for group i

Note that dividing by Fm_i (normalization) is necessary to account for the number of MCNP particles that actually start in group i. Also note that T_i is already multiplied by a dose conversion factor in MCNP.

The standard deviations of the various results were statistically combined to determine the standard deviation of the total dose in each dose location. The estimated variance of the total dose rate, S^2_{total}, is the sum of the estimated variances of the individual dose rates S^2_i. The estimated total dose rate, estimated variance, and relative error [M.G] are derived according to Equations 7.4.2 through 7.4.5.

$$R_i = \frac{\sqrt{S_i^2}}{T_i} \qquad \text{(Equation 7.4.2)}$$

$$S_{Total}^2 = \sum_{i=1}^{n} S_i^2 \qquad \text{(Equation 7.4.3)}$$

$$T_{Total} = \sum_{i=1}^{n} T_i \qquad \text{(Equation 7.4.4)}$$

$$R_{Total} = \frac{\sqrt{S_{Total}^2}}{T_{Total}} = \frac{\sqrt{\sum_{i=1}^{n} S_i^2}}{T_{Total}} = \frac{\sqrt{\sum_{i=1}^{n} (R_i \times T_i)^2}}{T_{Total}} \qquad \text{(Equation 7.4.5)}$$

where,

i	=	tally component index
n	=	total number of components
T_{Total}	=	total estimated tally
T_i	=	tally i component
S^2_{Total}	=	total estimated variance
S^2_i	=	variance of the i component
R_i	=	relative error of the i component
R_{Total}	=	total estimated relative error

Note that the two-step approach outlined above allows the accurate consideration of the neutron and gamma source spectrum, and the location of the individual assemblies, since the tallies are calculated in MCNP as a function of the starting energy group and the region of the assembly location, and then in the second step multiplied with the source strength in each group in each location. It is therefore equivalent to a one-step calculation where source terms are directly specified in the MCNP input files, except for the approximation that fuel is modeled as fresh UO_2 fuel in MCNP, with an upper bound enrichment.

Since MCNP is a statistical code, there is an uncertainty associated with the calculated values. In MCNP the uncertainty is expressed as the relative error that is defined as the standard deviation of the mean divided by the mean. Therefore, the standard deviation is represented as a percentage of the mean. The standard deviation of the result depends on the variance reduction parameters used in the analyses and the number of starting particles for each run. These parameters were chosen so that the relative error for the dose rates presented in this chapter was typically less than 2%.

7.4.2 Flux-to-Dose-Rate Conversion

MCNP5 was used to calculate dose rates at the various desired locations. The point and ring detector tallies (F5), volume tallies (F4) as well as the surface tallies (F2) were utilized in the calculations. MCNP5 calculates neutron or photon fluxes and these values can be converted into dose by the use of dose response functions. This is done internally in MCNP and the dose response functions are listed in the input file. The response functions used in these calculations were taken from ANSI/ANS 6.1.1-1977 [B.U].

7.4.3 External Radiation Levels –STC

There is a significant number of parameters that affect the dose rates. These include the content, i.e. fuel specification and NFH located in the fuel assemblies, and the dose location, i.e. the radial, azimuthal and axial variation of the dose rates. Some of these parameters are interdependent, i.e. certain NFH components result in higher dose rates at different location than others. It would not be practical to present dose rates for all possible combinations of parameters. Instead, the effects of individual parameters are presented separately or in limited combination, so that trends and effects can be clearly demonstrated. However, a much larger set of parameter combination was in fact reviewed, to ensure that all relevant effects are captured.

7.4.3.1 Loading Patterns

Dose rates for the five loading patterns are presented in Table 7.4.1, evaluated for 1 m distance from the side, top and bottom of the STC. In all cases, loading pattern 4 results in the highest dose rates. Note that results for other distances show the same trend. Loading pattern 4 is therefore used for all subsequent STC calculations.

7.4.3.2 NFH in the assemblies

Dose rates for the various NFH in the fuel assemblies are presented in Table 7.4.2, evaluated again for 1 m distance from the side, top and bottom of the STC. Also included are results for a cask loading without any NFH inserts. Note that RCCAs are limited to the inner four cells, while only a single NSA, also placed in one of the inner cells, is permitted. The results show that for the side and top dose rate, the BPRA is bounding, while for the dose rate at the bottom, the RCCA is bounding. All further dose rates for the side and top are therefore reported for BPRAs whereas dose rates at the bottom are reported for RCCAs.

7.4.3.3 Axial Dose Rate Variations

To determine the axial variation of dose rates on the side of the cask, the side locations are subdivided into five axial sections with different heights. This division into section specifically considers areas where higher dose rates are expected, such as the small gap between the cask body and the lid that exists when the STC is lifted by the crane. While such small areas are expected to show higher dose rates on the surface of the cask, the effect at larger distances is not significant. To show this, axial distribution of dose rates are shown on the STC surface and at 1 m from the STC. Consistent with the evaluation of the NFH, results are presented in Table 7.4.3 with BPRAs in all assemblies. The results show a substantial axial dose rate profile on the

surface, with a peak near the gap mentioned before. However, at 1 m distance, the axial dose rate profile is much flatter, and the maximum has moved to the mid portion of the STC. The higher dose rates are therefore only relevant for operations that are performed at distances of 1 m or less from the outer surface of the cask and near the top.

7.4.3.4 Azimuthal Dose Rate Variations

As shown in Figure 7.3.2, 16 dose locations are placed azimuthally around the STC at various distances, including the surface, with 4 of them aligned with the ribs in the cask wall. Additionally (Figure 7.3.1), on the surface, two dose locations are placed directly next to one of the ribs. This is to specifically evaluate the effect of the ribs on the surface dose. Table 7.4.4 shows the results for the surface, 1m distance and 5 m distance, and several azimuthal angles with respect to the location of the rib. All results are for the axial center (mid height) of the casks, and all assemblies containing BPRAs. The surface shows a large dose increase directly on the rib. However, this effect is very localized, i.e. the dose locations right next to the rib are already much lower. This localized effect on the ribs in the wall is a known effect, and was also identified for the HI-TRAC transfer casks that contain various numbers of ribs through the lead. The remainder of the surface, i.e. the entire area except the small section in front of the rib, show only a moderate dose rate variation when compared to the surface average dose rate. At 1 m and 5 m, the large localized dose rate increase in front of the rib has mostly disappeared. Azimuthal dose variations for distance larger than 5 m have not been determined. To conservatively account for any potential azimuthal variations at larger distances, the ratio between the maximum and average dose rate at 5 m is applied to all dose rates for distances larger than 5 m.

7.4.3.5 Contributions of the different source terms to the total dose rates

Contributions of the different source terms, i.e. neutrons, photons from fuel, and photons from Co-60, are listed in Table 7.4.5. The table shows those values for the surface and 1 m, and for the mid height and the area near the top of the cask. Totals are also shown with and without the contribution of the BPRAs. In all locations, the dose rates are dominated by gammas from fuel and Co-60, with the largest contribution provided by the BPRAs.

7.4.3.6 Dose rates on surface and at larger distances from the STC

Dose rates on surface and at larger distances from the STC are also calculated. Results in the form of the total dose rate are listed in Table 7.4.6. Note that the dose rates from the side include the factor to account for any azimuthal dose variation discussed before. The high localized dose rate at the bottom center of the bottom lid with RCCAs in the STC will not be accessed by any personnel. Note that dose rates on the outer surface of both bottom and top lids are significantly lower than the max dose rates at the center of the lids.

7.4.3.7 Summary for the STC

The majority of the outer surface of the STC shows bounding dose rates based on design basis loading configurations of the order of 3 to 4 Rem/hr. This is comparable to, or lower than, bounding dose rates from typical licensed transfer casks based on design basis loading configurations, such as HI-TRAC 100. The HI-STORM 100 FSAR reports dose rates for the HI-TRAC 100 [K.A] with design basis fuel. For dose location 2, side of the HI-TRAC, the dose rate

is 3.8 Rem/hr (Table 5.1.7 in HI-STORM 100 FSAR). Note that the dose rates reported for the STC in the licensing report occur only for the period after the STC is removed from the pool and before it is placed inside the HI-TRAC. Once inside the HI-TRAC the dose rates are reduced significantly. There are also certain clearly identified local areas where larger surface dose rates are to be expected. These are the areas on the four ribs in the cask wall, and the area at the top of the cask, at and near the gap between the cask wall and the lid. Surface dose rates in those areas may be up to 6 rem/hr near the gap between the lid and the cask body, and up to 11.5 rem/hr on the radial ribs of the STC. However, no routine operations are performed close to the surface in those areas. Additionally, higher dose rates exist on the top of the lid near the vent and drain ports, and underneath the cask when RCCAs are loaded.

7.4.4 Crane Hang Up

Crane Hang up is postulated as the off-normal condition for STC movement from the pool to the HI-TRAC and from the HI-TRAC to the SPF. The worst scenario is considered, where the STC is pulled out entirely from the pool and the whole STC body is exposed. In case of crane hang up the primary operator may need to perform some manual operation above the STC. For the primary operator, the dose rate is calculated 8 feet directly above the STC lid [S.C]. For secondary personnel 22 feet from the surface of the STC is considered [S.B]. Table 7.4.6 presents dose to the primary and secondary personnel during crane hang up.

7.4.5 Dose to an Individual Member of Public (On-Site) from STC

The dose contribution to individual members of the public is calculated at 60 meters from the STC surface. The fuel storage building is not credited in this calculation. As a bounding approach, a 60 m restricted area outside the FSBs at both Unit 3 and 2 is proposed without considering the distance between the STC surface and the FSB wall. This 60 m restricted area outside the FSBs will be controlled in accordance with the Technical Specifications during the STC movement from SFP to HI-TRAC and vice versa. Table 7.4.7 presents the total dose rates to an individual member of public per hour and also per year during normal movement of the STC. For normal condition 8 hrs is used per year, which corresponds to 16 transfers with 30 min per transfer. Table 7.4.8 presents the annual dose rates to the member of public in case of crane hang up. A 4 hours crane hang up is postulated. This time is sufficient for manually moving the STC back into the SFP or into the HI-TRAC. The total dose to the public is obtained by adding dose (considering NFH) from the STC, ISFSI contribution (fully loaded ISFSI is considered for this purpose) and the site contribution from the operating plant facility. Dose to the public is calculated for the bounding loading pattern 4 (Table 7.1.1). Tables 7.4.7 and 7.4.8 clearly demonstrate that the 10 CFR 20.1301 regulations are met at a distance of 60 m from the STC surface during transfer operation from the SFP to the HI-TRAC or vice versa and therefore the 60 m restricted area around the FSBs is conservative.

7.4.6 External Radiation Levels – HI-TRAC 100 D Transfer Cask

Table 7.4.9 compares the dose rates from the HI-TRAC (normal condition) for five loading patterns described in Table 7.1.1. Table 7.4.9 establishes that in general the loading pattern 3 is bounding for the side, while loading patterns 4 is bounding for top and bottom. However, it is observed that this trend is not universally true and depends on the dose locations and transfer

situations (normal or accident) [L.G]. In this Chapter, dose rates for all the HI-TRAC cases are reported only for the bounding loading patterns as determined, while dose rates for each loading patterns are documented in Reference [L.G]. The calculated dose rates results for the HI-TRAC containing the STC for normal condition are presented in Table 7.4.10. Azimuthal variation of the dose rates on the surface of the HI-TRAC is considered by using cylindrical tallies (Figure 7.3.6). For HI-TRAC azimuthal tallies are utilized up to 1 m from the surface. To conservatively account for any potential azimuthal variations at larger distances, the ratio between the maximum and average dose rate at 1 m is applied to all dose rates for distances larger than 1 m. Therefore, the highest dose rates are reported considering azimuthal variance for all HI-TRAC dose evaluations.

Three accident conditions are postulated for HI-TRAC movement between Unit 3 and 2. They are:

- Accident Condition 1: Loss of water from the water jacket (e.g. due to fire)
- Accident Condition 2: Simultaneous loss of water from the water jacket and HI-TRAC annulus from tip over.
- Accident Condition 3: STC off-center within the HI-TRAC due to tip over resulting in crushing of the centering assembly accompanying with the simultaneous loss of water from HI-TRAC jacket and HI-TRAC annulus

Dose rate results for accident condition 1, 2, and 3 are presented in Tables 7.4.11, 7.4.12, and 7.4.13, respectively at various distances from the HI-TRAC.

7.4.7 Dose to an Individual Member of Public (On-Site)

The dose contribution to individual members of the public is calculated at 20 meters from the surface of the HI-TRAC. Table 7.4.14 presents the total dose per year to an individual member of public. For normal condition 128 hrs is used per year, which corresponds to 16 transfers with 8 hours per transfer. Table 7.4.15 presents the same data for the off-normal condition. HI-TRAC off-normal condition is postulated as HI-TRAC transporter break down. In addition to the normal 128 hours per year for 16 transfers, for this postulated off-normal condition occupancy time for the member of a public is considered 240 hrs per year, which translates to 30 days (duration of off-normal condition) and 8 hours occupancy each day. The total dose to the public is obtained by adding dose (considering NFH) from the HI-TRAC, ISFSI contribution (fully loaded ISFSI is considered for this purpose) and the site contribution from the operating plant facility. Tables 7.4.14 and 7.4.15 clearly demonstrate that the 10 CFR 20.1301 regulations are met at a distance of 20 m from the surface of the HI-TRAC.

7.4.8 Effluent Dose Evaluation

Effluent dose from the STC is not considered in this report as the STC seal will be leak tested to the leak tight condition per ANSI 14.5. Section 8.4.4 discusses leakage test of the STC confinement boundary.

7.4.9 Haul Path and Controlled Area Boundary

Figure 7.4.1 depicts the haul path from Unit 3 to Unit 2 by a red line with other features of the

surrounding area including the ISFSI. The restricted area boundary at 20 m from the HI-TRAC surface for an individual member of public who is not a licensed worker is depicted (not to scale) in Figure 7.4.2. An individual member of public will be controlled in accordance with the Technical Specifications outside this 20 m restricted area during the inter unit transfer operation. Figure 7.4.3 presents a building identification plan showing true north of the Indian Point, while Figure 7.4.4 is a scaled map of the surrounding terrain. The ISFSI is located north of the Unit 2, Unit 3, and the haul path. The IPEC owner controlled area boundary is located approximately 472 m (1548 ft) to the north, 592 m (1944 ft) to the east, greater than 600 m (<2000 ft) to the south, and 169 m (554 ft) to the west from the center of the ISFSI [L.J]. This translates to distances from the edge of the ISFSI to approximately 457 m in the north direction, 560 m in the east direction, greater than 585 m in the south direction, and 137 m in the west direction (Hudson River) [L.J]. Distances from the edge of the ISFSI to Unit 2 and Unit 3 (towards south) are 121.92 m (400 ft) and 354.79 m (1164 ft), respectively [T.N]. A 400 ft distance is used from the ISFSI to calculate dose to the public from the ISFSI due to the transfer operation, which is conservative as the haul path is from Unit 3 (further south) to Unit 2. The minimum distance from the haul path to the owner controlled area boundary (excluding west side i.e. Hudson River) is 230 m (subtracting 354.79 m from 585 m), which is the distance from Unit 3 to the controlled area boundary towards south. On the other hand, the minimum distance from any point of the entire transfer operation to the west side controlled area boundary (Hudson River) is 164.6 m, which is the distance between the Hudson River and the Unit 2 FSB. Additionally, the closest controlled area boundary location (with bounding dose rates from the ISFSI) is on the west side towards the Hudson River 137 m from the edge of the ISFSI. Therefore as a bounding approach the west side control area boundary (Hudson River) is selected for demonstrating compliance with 10 CFR 72.104 and 106. 160 m is used as the distance to the controlled area boundary for the dose calculations from the transfer operation, while 137 m distance from the ISFSI towards west is used to estimate the ISFSI contribution to the controlled area boundary (as this is bounding) dose and added with the dose at the controlled area boundary (160 m) from the transfer operation to estimate the total dose at the controlled area boundary. Since there are no permanent occupants in the west direction (due to the Hudson River) 500 hours per year is used as the occupancy time. Instead of using 30 days (720 hrs), 500 hrs is used for off-normal and accident conditions controlled area boundary dose calculations, which is conservative due to the presence of the Hudson River. Due to large distance dose at the other controlled area boundaries are not considered and would be negligible. For 10 CFR 20.1301 evaluations, dose to the individual member of public, 20 m distance from the HI-TRAC surface and 60 m distance from the STC surface are used conservatively.

7.4.10 Dose Contribution to Controlled Area Boundary

Indian Point Energy Center is planning 16 STC transfers between Unit 3 and Unit 2 in 2012. The controlled area boundary dose estimations, shown in this chapter, are example cases to demonstrate that the 10 CFR 72.104 and 72.106 regulations are met in 2012 for 16 STC transfers. However, per the regulation of 10 CFR 72.212 the controlled area boundary dose calculation report [L.J] and the 10 CFR 72.212 evaluation report will be reviewed prior to placing casks in dry storage (ISFSI pad) and if they are found to be no longer bounding will be revised accordingly. The controlled area boundary report [L.J] must consider STC transfer operation contribution at the site boundary as part of the plant operations contributions.

The dose at the controlled area boundary is presented in Tables 7.4.16, 7.4.17, 7.4.18, 7.4.19, and 7.4.20 for normal, off-normal, accident conditions1, accident condition 2 and accident condition 3, respectively. As mentioned in Section 7.4.9, the distance from the HI-TRAC to the controlled area boundary is conservatively used as 160 m. The dose rate contribution from the radial and top HI-TRAC surfaces (including NFH) are considered, and provides a conservative bounding condition. For normal and off-normal conditions STC contribution at 160 m is added to the controlled area boundary dose rates. For normal condition 16 hrs STC contribution is used which corresponds to 16 transfer of STC from SFP to the HI-TRAC at each FSB and 30 minutes for each transfer. An additional 4 hrs is used for the off-normal condition, which accounts for the crane hang up. An STC contribution is not considered for the accident conditions due to the large margin in the results. Tables 7.4.16, 7.4.17, 7.4.18, 7.4.19, and 7.4.20 show that the 10 CFR 72.104 and 10 CFR 72.106 regulations are met at a distance of 160 m from the transfer operation.

7.4.11 Dose Rates from STC and HI-TRAC with NSA

The dose rates comparison between one NSA and 11 BPRAs vs. 12 BPRAs on the surface, and 1 m from the STC and HI-TRAC are reported in Table 7.4.21. NSA is compared with RCCAs for bottom dose rates. For side dose rates from both the STC and HI-TRAC, dose rates are reported at 0^0 (on the rib) and at 45^0. The 45^0 location is selected to show the dose rates on the surface and at 1 m, where the outer basket cell contents do not shield the inner basket cells. Table 7.4.21 demonstrates in general that NSA is bounded by BPRAs for the side, and for the bottom NSA is bounded by the RCCAs. Note that in some cases the dose rates from 1 NSA and 11 BPRAs combination are slightly higher than that of 12 BPRAs case. Further investigation has revealed that the difference for the radial surface dose rates (Surface 0^0 and 1 m away from surface 0^0 for the bare STC) are not statistically significant, i.e. results are within one standard deviation. Additionally, the top dose rates (bare STC) between the two cases (1 NSA and 11 BPRAS vs. 12 BPRAs) are also comparable. HI-TRAC dose rates with NSA at 45^0 (on surface) and for the top lid are marginally higher than that with the BPRAs. This marginal difference is due to the NSA neutron source term. However, it is important to note here that HI-TRAC dose rates are calculated without considering borated water inside STC. Therefore, BPRAs and RCCAs are used to report the maximum doses and to show compliance with the regulatory limits.

7.4.12 Occupational Exposures for ALARA Consideration

The overall personnel (person-rem) exposure for the entire fuel transfer operation between Unit 3 and 2 is presented in Table 7.4.22 for the bounding loading patterns as determined. The values are estimates of exposures associated with different aspects of the transfer as described in Chapter 10 in detail. All the locations and number of personnel are derived by carefully considering the actual operation procedures, equipments used and from other spent fuel transfer experiences. The dose rate from the outer ring of the STC top lid (from Table 7.4.6) is used for all the operations on the STC lid and on the HI-TRAC lid. However, workers will perform the STC/HI-TRAC top lid operations from the side of the STC/HI-TRAC by extending their hands or other required equipment. Moreover, all the operators will not be at the closest location for the entire duration with respect to the STC or HI-TRAC during a specific operation. The operators will perform their stipulated tasks during a specific operation and, on completion of that task, wait in a low dose waiting area. Therefore, an additional column is introduced in the

occupational dose table (Table 7.4.22), which documents the duration at closest distance with respect to STC or HI-TRAC. These durations at the closest distance are utilized for the occupational dose calculations. The highest dose rates are used taking into account the presence of NFH (BPRAs) in the STC.

It is important to note that these dose rates are based on the usage of long-reach tools as applicable to prevent the workers from direct contact with the STC. Additionally, the dose received by the secondary personnel as shown in Table 7.4.22 is considered bounding for control room occupants. Note that lead shielding will be used as applicable to protect the workers.

7.4.13 Summary and Conclusions

The radiological evaluations presented here demonstrate that the STC design promotes reasonable dose rates during the short period when the STC is moved from the SFP into the HI-TRAC and vice versa. Dose rates around the STC during that time are in fact comparable to those calculated for other spent fuel transfer casks such as the HI-TRAC 100. With the STC inside the HI-TRAC, dose rates are very low, and all regulatory dose and dose rate requirements are easily met.

Dose to the general member of public is evaluated separately for the STC transfer operation from the SFP to the HI-TRAC, from HI-TRAC to SFP, and for the HI-TRAC transfer operation between Unit 3 and 2. The results demonstrate that for STC operation within the FSB, the 10 CFR 20.1302 limit is met at 60 m from the surface of the STC. Fuel storage building is not accounted in this calculation. A 60 m restricted area is conservatively proposed for both FSBs at Unit 3 and 2 and will be controlled in accordance with the Technical Specifications. Similarly for the HI-TRAC movement a 20 m restricted area is required from the HI-TRAC surface for the general member of public and will be controlled in accordance with the Technical Specifications.

The 10 CFR 72 controlled area boundary are conservatively assumed at 160 m from the transfer operation. 160 m distance from the STC is considered without crediting the fuel storage building for the STC contribution. The dose rates, as shown in this chapter, at or beyond the controlled area boundary for normal, off-normal, and accident (accident 1, 2 and 3) conditions are below the regulatory limits. All the dose components, namely dose from the HI-TRAC, dose from STC movement between pool and HI-TRAC, site and ISFSI, are considered for this calculation.

Based on the results shown in Table 7.4.22, the overall personnel (person-rem) dose from the operations necessary for moving the STC from SFP to the HI-TRAC, HI-TRAC between Unit 3 and 2, and STC from HI-TRAC to SFP are reasonable and are acceptable as part of the annual dose incurred at the plant and in accordance with ALARA.

The evaluations, and the calculated results, still contain a number of conservatisms. The calculations for the STC in the HI-TRAC show that applicable regulatory limits are met. In these cases conservatisms are less important, and just give added assurance that those limits are met. However, for the bare STC, dose rates are higher, and are used to develop detailed operational procedures and planning of operations with respect to ALARA principles. Knowledge of conservatisms that may result in significant differences between calculated and actual dose rates are therefore important. The relevant conservatisms and their potential impact on dose rates are therefore listed and discussed below.

- Content:
    - There are some conservatisms in the fuel specifications such as lower bound enrichments or upper bound fuel mass, however, those are not expected to have a significant impact on dose rates.
    - BPRAs and TPDs have a significant impact on dose rates at the top of the STC. Depending on the number of those devices loaded with the fuel, dose rates may be substantially lower than that of the calculated values.
    - Not all fuel loaded into an individual cask will have the bounding burnup/enrichment/cooling time combination and contain the bounding NFH. The corresponding level of conservatism in dose rates will differ from cask to cask.
- STC Dimensions: As built dimensions are used, except that the weld overlay on the inside of the STC is neglected. This is not expected to have a significant impact on dose rates.
- Fresh fuel assumption in the shielding models: Studies regarding homogeneous and heterogeneous fuel modeling that also consider spent and fresh fuel indicate that the neutron dose rates may be substantially overestimated, by about factor 2, by the use of the fresh fuel assumption. However, since the neutron dose rate is not the dominant dose rate contribution, the effect on the total dose rate is small.
- Dose from Co-59 activation: The Co-60 dose rate (from Co-59 activation) is the dominant dose rate component near the top of the STC where the operational activities are performed. This dose rate originates from the top end fittings of the fuel assemblies and the NFH inserted in the fuel assemblies (There is also dose from Co-60 at the bottom of the STC, however, this area is less important from an operational perspective). In addition to burnups and cooling times of fuel assemblies and NFH discussed above, the level of this dose is also affected by the initial Co-59 content of the materials, and the flux factors for those components. Upper-bound values are used for both these parameters, and variations by a factor of 2 (i.e. 50% of the assumed value) are considered possible. This could potentially result in substantially lower dose rates from Co-60 than calculated.

In summary, while more realistic dose rates were calculated from the bare STC to support radiation protection planning, the calculated dose rates are still conservative. Specifically, dose rates from Co-60 could be substantially lower than calculated. Also, casks loaded with fuel that shows larger margin to the design basis calculation, or that contain fewer NFH devices, would show lower dose rates. These conditions may be considered in the radiation protection planning for the fuel transfers.

TABLE 7.4.1
TOTAL DOSE RATES FOR FIVE DIFFERENT LOADING PATTERNS FOR STC

Dose Location	**Total Dose Rate (mrem/hr)**				
	Pattern 1	**Pattern 2**	**Pattern 3**	**Pattern 4**	**Pattern 5**
Radial Surface (mid height) @ 1 m	337.4	418.2	450.2	614.8	605.3
Top Surface @ 1 m	97.4	116.0	124.7	206.9	186.3
Bottom Surface @ 1 m	1718.7	1983.4	2150.5	3400.8	3023.7

TABLE 7.4.2
TOTAL DOSE RATES FOR VARIOUS NFH FOR STC

Dose Location	Total Dose Rate (mrem/hr)			
	No NFHs	BPRAs	TPDs	RCCAs
Radial Surface (mid height) @ 1 m	614.8	1036.8	619.9	616.0
Top Surface @ 1 m	206.9	389.7	361.8	207.0
Bottom Surface @ 1 m	3400.8	3512.5	3401.1	4636.5

TABLE 7.4.3
AXIAL DOSE DISTRIBUTION (WITH BPRA) FOR STC

Radial Dose Location, from Bottom to Top, including Height	**Total Dose Rate (mrem/hr)**	
	Surface	**1 m from Surface**
Radial Surface (166.6 Inch high)	3256.9	1036.8
Below Flange (3 Inch high)	3975.4	674.8
Flange (7.3 Inch high)	5773.4	701.4
Gap between STC Body and Lid (13/16 Inch high)	5691.0	743.8
Side of Lid (4.96 Inch high)	1023.2	704.6

TABLE 7.4.4
AZIMUTHAL DOSE VARIATION (WITH BPRA) ON THE SURFACE AND AT VARIOUS DISTANCES FROM THE STC

Angle from Center of radial Rib	**Total Dose Rate (mrem/hr)**		
	Surface	**1 m from Surface**	**5 m from Surface**
0° (Directly on Rib)	11373.9	1385.0	231.5
2.3° (Next to Rib)	8470.1	N/A	N/A
4.6° (Next to Rib)	4468.2	N/A	N/A
22.5°	2758.1	1174.2	249.3
45° (Mid Point Between Ribs)	1891.2	869.5	172.9

TABLE 7.4.5
INDIVIDUAL DOSE CONTRIBUTION BY FUEL GAMMAS, NEUTRONS AND COBALT-60 GAMMAS FOR STC

Dose Location	Dose Rate (mrem/hr)					
	Fuel Gammas*	Co-60 Gammas	Neutrons	Total	BPRA	Total with BPRA
Surface, Mid Height	1572.5	0.5	399.0	1972.1	1284.8	3256.9
1 m from Surface, Mid Height	508.0	9.5	97.3	614.8	422.0	1036.8
Surface, Top Flange	19.2	3203.9	1.4	3224.6	2548.8	5773.4
1 m from Surface, Top Flange	77.0	298.5	18.2	393.7	307.7	701.4

* Dose rate contribution from the (n,p) reaction is included.

HOLTEC INTERNATIONAL COPYRIGHTED MATERIAL

TABLE 7.4.6
DOSE ON THE SURFACE OF THE STC AND AT VARIOUS DISTANCES

Dose Location	Total Dose Rate (mrem/hr)
Radial Surface of STC (With BPRA)	
On Surface	11373.9
1 m	1385.0
2 m	700.7
5 m	249.3
10 m	76.7
Secondary Crane Operator/Supervisor (22 feet from the Surface of the STC)	160.1
Top Lid of STC (With BPRA)	
Surface (max at the center)	1360.3*
Surface (outer ring, with 23.4 in ring inner diameter and 25.25 inch outer diameter)	88.2
Surface (drain port)	7458.5
Surface (vent port)	6149.7
1 m	389.7
2 m	151.7
10 m	9.4
Primary Crane Operator (8 Feet From the Top of the STC)	131.9
Bottom Plate of STC (with RCCA)	
Surface (max at center with RCCAs)	21090.8
Surface (outer ring, with 21 in ring inner diameter and 23.4 inch outer diameter)	1665.4
1 m	4636.5
10 m	77.0

* Conservatively 1400 mrem/hr is used in the proposed Technical Specifications.

HOLTEC INTERNATIONAL COPYRIGHTED MATERIAL

TABLE 7.4.7
DOSE (AT 60 METERS FROM STC WITH BPRA) TO THE INDIVIDUAL MEMBER OF PUBLIC (ON-SITE) FOR NORMAL MOVEMENT OF STC FROM THE SPENT FUEL POOL TO THE HI-TRAC (FUEL STORAGE BUILDING IS NOT CREDITED)

Dose from STC (mrem/hr)	**Dose Rate from ISFSI* (mrem/hr)**	**Site (e.g. operating plant facilities and other site sources such as the temporary low level storage building)† (mrem/hr)**	**Total (mrem/hr)**	**Regulatory Limit‡ (mrem/hr)**	**Occupancy§ (hr)**	**Total (mrem/yr**	**Regulatory Limit** (mrem/yr)**
10CFR20.1301(a) and (b)– Normal condition							
1.72	0.113	8.6E-04	1.83	2.0	8	14.64	100

* 400 ft is used, which is the distance from the ISFSI edge (towards south) to the Unit 2 facilities [T.N]. Dose rate is obtained from Reference [L.J].
† 10 CFR 72.212 Evaluation Report for Independent Spent Fuel Storage Installation Utilizing the Holtec International HI-STORM 100 Cask System, Rev 7, Entergy Nuclear
‡ 10 CFR 20.1301 (a).(2)
§ 30 min travel time between pool and the HI-TRAC and total 16 transfers per year.
** 10 CFR 20 1301 (a).(1)

TABLE 7.4.8

ANNUAL DOSE (AT 60 METERS FROM STC WITH BPRA) TO THE INDIVIDUAL MEMBER OF PUBLIC (ON-SITE) FROM STC FOR CRANE HANG UP (OFF-NORMAL CONDITION) IN ADDITION TO 16 NORMAL TRANSFER OPERATION (FUEL STORAGE BUILDING IS NOT CREDITED)

Dose from STC (mrem/hr)	**Dose from ISFSI* (mrem/hr)**	**Site (e.g. operating plant facilities and other site sources such as the temporary low level storage building)† (mrem/hr)**	**Total (mrem/hr)**	**Occupancy‡ (hr)**	**Total (mrem)**	**Regulatory Limit§ (mrem/year)**
10CFR20.1301(a) and (b)– Normal condition						
1.72	0.113	8.6E-04	1.83	12	21.96	100

* 400 ft is used, which is the distance from the ISFSI edge (towards south) to the Unit 2 facilities [T.N]. Dose rate is obtained from Reference [L.J].
† 10 CFR 72.212 Evaluation Report for Independent Spent Fuel Storage Installation Utilizing the Holtec International HI-STORM 100 Cask System, Rev 7, Entergy Nuclear
‡ 4 hrs is assumed for crane hang up and 8 hrs for 16 (30 min each) normal transfer of STC from pool to HI-TRAC
§ 10 CFR 20 1301 (a).(1)

TABLE 7.4.9

TOTAL DOSE RATES (HI-TRAC) FOR FIVE DIFFERENT LOADING PATTERNS

Dose Location	**Total Dose Rate (mrem/hr)**				
	Pattern 1	**Pattern 2**	**Pattern 3**	**Pattern 4**	**Pattern 5**
Radial Surface (mid height) @ 1 m	0.45	0.39	0.51	0.44	0.42
Top Surface @ 1 m	183.3	205.6	232.3	358.3	330.7
Bottom Surface @ 1 m	9.6	9.4	11.2	13.9	12.5

TABLE 7.4.10

TOTAL DOSE RATES AT VARIOUS DISTANCES FROM THE HI-TRAC 100D FOR NORMAL CONDITION (MAXIMUM DOSE IS REPORTED CONSIDERING AZIMUTHAL VARIANCE)

Dose Rate Location	Fuel Gammas* (mrem/hr)	^{60}Co Gammas (mrem/hr)	Neutrons (mrem/hr)	Total (mrem/hr)	Total with BPRAs (mrem/hr)	Total with TPDs (mrem/hr)	Total with RCCAs (mrem/hr)
Radial Surface of HI-TRAC 100D							
Surface	0.31	0.04	1.45	1.80	2.11†	1.86	1.80
Surface near bottom	0.01	0.06	0.28	0.35	0.37	0.37	0.37
1 m from surface	0.48	0.04	0.22	0.73	1.00	0.80	0.73
10 m from surface	0.020	0.077	0.031	0.127	0.219	0.204	0.128
20 m from surface	0.008	0.042	0.014	0.063	0.111	0.105	0.063
30 m from surface	0.004	0.026	0.008	0.038	0.068	0.064	0.038
160 m from surface (controlled area boundary)	<0.0001	0.0010	0.0003	0.0014	0.0027	0.0025	0.0014
Top of HI-TRAC 100D (without top lid installed)							
Surface	78.2	785.2	105.8	969.2	1888.9	1803.5	969.2
1 m from surface	31.2	319.6	22.7	373.6	735.0	703.1	373.6
10 m from surface	1.0	9.2	0.5	10.6	21.0	20.2	10.6
20 m from surface	0.25	2.28	0.11	2.64	5.22	4.96	2.64
30 m from surface	0.11	1.03	0.04	1.19	2.33	2.19	1.19
Bottom Lid of HI-TRAC 100D							
Surface (average)	0.32	7.04	3.31	10.68	10.88	10.68	11.95
1 m from surface	0.5	11.4	2.0	13.9	14.2	13.9	16.4
10 m from surface	0.01	0.24	0.04	0.29	0.32	0.31	0.34
20 m from surface	0.004	0.068	0.011	0.082	0.098	0.095	0.093
30 m from surface	0.002	0.033	0.006	0.040	0.050	0.049	0.045

* Dose rate contribution from the (n,p) reaction is included.
† Conservatively 5 mrem/hr is used in the proposed Technical Specifications.

HOLTEC INTERNATIONAL COPYRIGHTED MATERIAL

TABLE 7.4.11

TOTAL DOSE RATES AT VARIOUS DISTANCES FROM THE HI-TRAC 100D FOR ACCIDENT CONDITION 1 (LOSS OF WATER FROM THE WATER JACKET)

Dose Rate Location	Fuel Gammas* (mrem/hr)	^{60}Co Gammas (mrem/hr)	Neutrons (mrem/hr)	Total (mrem/hr)	Total with BPRAs (mrem/hr)	Total with TPDs (mrem/hr)	Total with RCCAs (mrem/hr)
Radial Surface of HI-TRAC 100D							
Surface	0.6	0.0	9.6	10.2	10.9	10.2	10.2
Surface near bottom	0.01	0.04	0.50	0.55	0.57	0.56	0.56
1 m from surface	0.21	0.06	3.19	3.46	3.77	3.57	3.46
10 m from surface	0.017	0.036	0.159	0.211	0.297	0.281	0.212
20 m from surface	0.006	0.018	0.049	0.073	0.115	0.110	0.073
30 m from surface	0.004	0.022	0.017	0.043	0.069	0.066	0.043
160 m from surface (controlled area boundary)	<0.0001	0.0008	0.0005	0.0014	0.0022	0.0022	0.0014
Top of HI-TRAC 100D (without top lid installed)							
Surface	79.2	789.8	99.5	968.5	1894.2	1809.9	968.5
1 m from surface	31.4	309.1	20.1	360.9	709.9	679.9	360.9
10 m from surface	1.0	9.4	0.5	10.9	21.5	20.6	10.9
20 m from surface	0.2	2.4	0.1	2.7	5.4	5.2	2.7
30 m from surface	0.08	1.00	0.06	1.14	2.24	2.11	1.14
Bottom Lid of HI-TRAC 100D							
Surface (average)	0.3	7.0	3.6	10.8	11.0	10.8	12.0
1 m from surface	0.5	11.3	2.1	13.9	14.2	13.9	17.2
10 m from surface	0.01	0.25	0.04	0.30	0.33	0.32	0.35
20 m from surface	0.004	0.069	0.014	0.086	0.101	0.099	0.097
30 m from surface	0.002	0.032	0.007	0.041	0.051	0.050	0.046

* Dose rate contribution from the (n,p) reaction is included.

HOLTEC INTERNATIONAL COPYRIGHTED MATERIAL

TABLE 7.4.12

TOTAL DOSE RATES AT VARIOUS DISTANCES FROM THE HI-TRAC 100D FOR ACCIDENT CONDITION 2 (SIMULTANEOUS LOSS OF WATER FROM THE ANNULUS BETWWEN THE STC AND HI-TRAC AND FROM HI-TRAC WATER JACKET)

Dose Rate Location	Fuel Gammas* (mrem/hr)	^{60}Co Gammas (mrem/hr)	Neutrons (mrem/hr)	Total (mrem/hr)	Total with BPRAs (mrem/hr)	Total with TPDs (mrem/hr)	Total with RCCAs (mrem/hr)
Radial Surface of HI-TRAC 100D							
Surface	3.3	0.0	858.5	861.8	863.2	861.9	861.8
Surface near bottom	0.3	0.2	103.9	104.4	104.5	104.4	104.5
1 m from surface	1.1	0.1	280.2	281.4	282.2	281.5	281.4
20 m from surface	0.02	0.02	3.38	3.41	3.46	3.45	3.41
30 m from surface	0.01	0.01	1.62	1.63	1.66	1.66	1.64
160 m from surface	0.0002	0.0004	0.0377	0.0383	0.0393	0.0391	0.0383
Top of HI-TRAC 100D (without top lid installed)							
Surface	80.6	825.3	162.2	1068.1	2032.6	1951.3	1068.1
1 m from surface	32.4	321.2	49.1	402.7	768.4	740.1	402.7
20 m from surface	0.2	2.0	0.7	2.9	5.1	4.9	2.9
30 m from surface	0.10	0.81	0.47	1.39	2.27	2.15	1.39
Bottom Lid of HI-TRAC 100D							
Surface (average)	0.4	4.1	119.3	123.8	123.9	123.8	125.1
1 m from surface	0.4	7.1	42.8	50.3	50.6	50.3	53.0

* Dose rate contribution from the (n,p) reaction is included.

HOLTEC INTERNATIONAL COPYRIGHTED MATERIAL

TABLE 7.4.13

TOTAL DOSE RATES AT VARIOUS DISTANCES FROM THE HI-TRAC 100D FOR ACCIDENT CONDITION 3 (STC OFF-CENTER WITHN HI-TRAC)

Dose Rate Location	Fuel Gammas* (mrem/hr)	^{60}Co Gammas (mrem/hr)	Neutrons (mrem/hr)	Total (mrem/hr)	Total with BPRAs (mrem/hr)	Total with TPDs (mrem/hr)	Total with RCCAs (mrem/hr)
Radial Surface of HI-TRAC 100D							
Surface	1.2	<0.01	974.2	975.4	975.4	975.4	975.4
Surface near bottom	0.6	0.1	91.1	91.7	91.7	91.7	91.7
1 m from surface	1.0	<0.01	341.4	342.5	342.5	342.5	342.5
20 m from surface	0.03	0.03	4.03	4.09	4.20	4.16	4.09
30 m from surface	0.005	0.011	1.922	1.937	1.958	1.957	1.937
160 m from surface	0.0003	0.0005	0.0456	0.0464	0.0476	0.0475	0.0464

* Dose rate contribution from the (n,p) reaction is included.

HOLTEC INTERNATIONAL COPYRIGHTED MATERIAL

TABLE 7.4.14

DOSE (WITH BPRA) TO THE INDIVIDUAL MEMBER OF PUBLIC (ON-SITE) FROM HI-TRAC FOR NORMAL CONDITION OF HI-TRAC MOVEMENT (AT 20 METERS FROM HI-TRAC)

Dose Rate From HI-TRAC (mrem/hr)	**Dose Rate from ISFS* (mrem/hr)**	**Site (e.g. operating plant facilities and other site sources such as the temporary low level storage building) (mrem/hr)†**	**Total (mrem/hr)**	**Regulatory Limit (mrem/hr)‡**	**Occupancy (hr)§**	**Total (mrem/ yr)**	**Regulatory Limit (mrem/yr)****
10CFR20.1301(a) and (b)– Normal Condition							
0.111	0.113	8.6E-04	0.22	2	128	28.16	100

* 400 ft is used, which is the distance from the ISFSI edge (towards south) to the Unit 2 facilities [T.N]. Dose rate is obtained from Reference [L.J]
† 10 CFR 72.212 Evaluation Report for Independent Spent Fuel Storage Installation Utilizing the Holtec International HI-STORM 100 Cask System, Rev 7, Entergy Nuclear
‡ 10 CFR 20.1301 (a).(2)
§ 16 transfers per year and 8 hours per transfer for normal condition
** 10 CFR 20 1301 (a).(1)

TABLE 7.4.15

DOSE (WITH BPRA) TO THE INDIVIDUAL MEMBER OF PUBLIC (ON-SITE) FROM HI-TRAC FOR OFF-NORMAL CONDITION (CASK TRANSPORTER BREAK DOWN) IN ADDITION TO 16 NORMAL TRANSFER (AT 20 METERS FROM HI-TRAC)

HI-TRAC Dose Rate (mrem/hr)	**Dose Rate from ISFSI* (mrem/hr)**	**Site (e.g. operating plant facilities and other site sources such as the temporary low level storage building) (mrem/hr)†**	**Total (mrem/hr)**	**Occupancy (hr)‡**	**Total (mrem/yr)**	**Regulatory Limit (mrem/yr)§ §**
10CFR20.1301(a) and (b)– Off-normal condition						
0.111	0.113	8.6E-04	0.22	368	80.96	100

* 400 ft is used, which is the distance from the ISFSI edge (towards south) to the Unit 2 facilities [T.N]. Dose rate is obtained from Reference [L.J]
† 10 CFR 72.212 Evaluation Report for Independent Spent Fuel Storage Installation Utilizing the Holtec International HI-STORM 100 Cask System, Rev 7, Entergy Nuclear
‡ 30 days and 8 hrs each day for transporter break down in addition to 128 hours for normal operation
§ 10 CFR 20 1301 (a).(1)

HOLTEC INTERNATIONAL COPYRIGHTED MATERIAL

TABLE 7.4.16
DOSE (WITH BPRA) TO AN INDIVIDUAL AT CONTROLLED AREA BOUNDARY FOR NORMAL CONDITION

HI-TRAC Dose Rate* (mrem/128 hrs)	STC Dose Rate† (mrem/16hrs)	Dose rate from ISFSI (approx. 137 m from the edge of the ISFSI in the west direction) (mrem/500 hrs)‡	Site (e.g. operating plant facilities and other site sources such as the temporary low level storage building) (mrem/500 hrs)§	Total (mrem/yr)	Regulatory Limit (mrem/yr)
10CFR72.104(a) – Normal					
0.35	3.5	13.4	0.43	17.68	25

* 160 m distance is considered from the HI-TRAC for controlled area boundary. 128 hrs correspond to 16 transfers and 8 hrs for each transfer.
† 160 m distance is considered from the STC. 16 hrs correspond to 32 evaluated bare STC transfers (16 in each FSB) with 30 min travel time between the pool and HI-TRAC.
‡ The closest controlled area boundary location (with bounding dose rates from the ISFSI) is on the west side towards the Hudson River
§ 10 CFR 72.212 Evaluation Report for Independent Spent Fuel Storage Installation Utilizing the Holtec International HI-STORM 100 Cask System, Rev 7, Entergy Nuclear

TABLE 7.4.17

DOSE (WITH BPRA) TO AN INDIVIDUAL AT CONTROLLED AREA BOUNDARY FOR OFF-NORMAL CONDITION (TRANSPORTER BREAK DOWN)

HI-TRAC Dose Rate (mrem/500 hrs)	**STC Dose Rates* (mrem/20 hrs)**	**Dose rate from ISFSI (approx. 137 m from the edge of the ISFSI in the west direction) (mrem/500 hrs)†**	**Site (e.g. operating plant facilities and other site sources such as the temporary low level storage building) (mrem/500 hrs)‡**	**Total (mrem/yr)**	**Regulatory Limit (mrem/yr)**
10CFR72.104(a) – Off-Normal					
1.35	4.4	13.4	0.43	19.58	25

* 160 m distance is considered from the STC. 20 hrs correspond to 32 evaluated bare STC transfers (16 in each FSB) with 30 min travel time between the pool and HI-TRAC and a 4 hrs crane hang up.

† The closest controlled area boundary location (with bounding dose rates from the ISFSI) is on the west side towards the Hudson River. Since there are no permanent occupants in the west direction (due to the Hudson River) 500 hours per year is used as the occupancy time.

‡ 10 CFR 72.212 Evaluation Report for Independent Spent Fuel Storage Installation Utilizing the Holtec International HI-STORM 100 Cask System, Rev 7, Entergy Nuclear

TABLE 7.4.18

DOSE (WITH BPRA) TO AN INDIVIDUAL AT CONTROLLED AREA BOUNDARY FOR ACCIDENT CONDITION 1

HI-TRAC Dose Rate* (mrem/500 hrs)	**Dose rate from ISFSI (approx. 137 m from the edge of the ISFSI in the west direction) (mrem/500 hrs)†**	**Site (e.g. operating plant facilities and other site sources such as the temporary low level storage building) (mrem/500 hrs)‡**	**Total (mrem/ 500 hrs)**	**Regulatory Limit (mrem)**
10CFR72.106(b) – Accident (1 cask)				
1.1	13.4	0.43	14.93	5000

* Note that the HI-TRAC accident condition 1 dose rates at 160 m is slightly lower that that of normal condition. This is because the ratio used to account for azimuthal variation (Section 7.4.6) is higher for the normal condition that the accident condition 1. Otherwise for both cases the dose rates at 160 m is almost equal.

† The closest controlled area boundary location (with bounding dose rates from the ISFSI) is on the west side towards the Hudson River. Since there are no permanent occupants in the west direction (due to the Hudson River) 500 hours per year is used as the occupancy time.

‡ 10 CFR 72.212 Evaluation Report for Independent Spent Fuel Storage Installation Utilizing the Holtec International HI-STORM 100 Cask System, Rev 7, Entergy Nuclear

TABLE 7.4.19

DOSE (WITH BPRA) TO AN INDIVIDUAL AT CONTROLLED AREA BOUNDARY FOR ACCIDENT CONDITION 2

HI-TRAC Dose Rate (mrem/500 hrs)	**Dose rate from ISFSI (approx. 137 m from the edge of the ISFSI in the west direction) (mrem/500 hrs)***	**Site (e.g. operating plant facilities and other site sources such as the temporary low level storage building) (mrem/500 hrs)†**	**Total (mrem/ 500 hrs)**	**Regulatory Limit (mrem)**
10CFR72.106(b) – Accident (1 cask)				
19.7	13.4	0.43	33.53	5000

* The closest controlled area boundary location (with bounding dose rates from the ISFSI) is on the west side towards the Hudson River. Since there are no permanent occupants in the west direction (due to the Hudson River) 500 hours per year is used as the occupancy time.
† 10 CFR 72.212 Evaluation Report for Independent Spent Fuel Storage Installation Utilizing the Holtec International HI-STORM 100 Cask System, Rev 7, Entergy Nuclear

TABLE 7.4.20

DOSE (WITH BPRA) TO AN INDIVIDUAL AT CONTROLLED AREA BOUNDARY FOR ACCIDENT CONDITION 3

HI-TRAC Dose Rate (mrem/500 hrs)	**Dose rate from ISFSI (approx. 137 m from the edge of the ISFSI in the west direction) (mrem/500 hrs)***	**Site (e.g. operating plant facilities and other site sources such as the temporary low level storage building) (mrem/500 hrs)†**	**Total (mrem/ 500 hrs)**	**Regulatory Limit (mrem)**
10CFR72.106(b) – Accident (1 cask)				
23.8	13.4	0.43	37.63	5000

* The closest controlled area boundary location (with bounding dose rates from the ISFSI) is on the west side towards the Hudson River. Since there are no permanent occupants in the west direction (due to the Hudson River) 500 hours per year is used as the occupancy time.
† 10 CFR 72.212 Evaluation Report for Independent Spent Fuel Storage Installation Utilizing the Holtec International HI-STORM 100 Cask System, Rev 7, Entergy Nuclear

TABLE 7.4.21

DOSE RATES AROUND STC AND HI-TRAC WITH NSA AND BPRA

	STC		HI-TRAC	
Dose Rate Location	**Total with NSA (mrem/hr)**	**Total with BPRAs (mrem/hr)**	**Total with NSA (mrem/hr)**	**Total with BPRAs (mrem/hr)**
	Radial Surface			
Surface (averaged)	3250.3	3256.9	1.4	1.4
Surface 0°	11450.7	11373.9	1.1	1.1
Surface 45°	1816.6	1891.2	0.9	0.8
1 m away from surface (averaged)	1035.5	1036.8	0.7	0.7
1 m away from surface 0°	1405.3	1385.0	0.7	0.7
1 m away from surface 45°	786.2	869.5	0.7	0.7
	Top Lid			
Surface	1366.5	1360.3	1916.0	1887.2
1 m away from surface	390.9	389.7	712.1	703.9
	Bottom Lid			
	Total with NSA (mrem/hr)	**Total with RCCAs (mrem/hr)**	**Total with NSA (mrem/hr)**	**Total with RCCAs (mrem/hr)**
Surface	11940.0	21090.8	11.5	12.0
1 m away from surface	3500.8	4636.5	14.6	16.4

TABLE 7.4.22
ESTIMATED PERSON-REM EXPOSURE (WITH BPRA) FROM LOADING AND UNLOADING ONE SHIELDED TRANSFER CANISTER (NOTE 1)

Activity	Number of Personnel	Closest Distance	Total Duration (mins)	Duration at Closest Distance (mins)	Location of personnel	Estimated Person-rem exposure
Loading of the fuel and placement of the lid	3 (primary)	n/a	120	120	STC under water.	0.006
					SFP dose	
Raise the STC to just below the pool surface and wash down.	2 (primary)	2 m	30	10	STC is in the pool and men on pool deck	0.0294
	2 (secondary)	6 m				0.0079
Perform radiological survey of the STC lid	2 (primary)	2 m	20	10	Pool deck. STC is in water except the top portion.	0.0294
	2 (secondary)	12 m			Operation to be performed at the STC lid.	0.0022
Pump out little water from STC	1 (primary)	2m	15	5	Pool deck. STC is in water except the top portion.	0.0074
	1 (secondary)	12 m			Operation to be performed at the STC lid.	0.0006
Move STC from the pool to the truck bay floor.	2 (primary)	7 m	15	15	Pool deck	0.0090
	2 (secondary)	12 m			Pool deck	0.0033

Activity	Number of Personnel	Closest Distance	Total Duration (mins)	Duration at Closest Distance (mins)	Location of personnel	Estimated Person-rem exposure
Place STC in the HI-TRAC	2 (primary)	7 m	15	15	Pool deck	0.0090
	2 (secondary)	12 m			Pool deck	0.0033
Install lead cover over the annular region. Tighten all 24 lid bolts	2 (primary)	0.5 m	45	30	Operation to be performed at the STC lid. STC in HI-TRAC	0.0882
	1 (secondary)	1.5 m				0.0147
Leak test the STC lid seals	1(primary)	0.5 m	30	10	Operation to be performed at the STC lid (in HI-TRAC).	0.0147
	1 (secondary)	1.5 m				0.0049
Establish the steam space	2(primary)	1 m	90	15	Operation to be performed at base side of the HI-TRAC.	0.0005
Monitor pressure rise for 24 hours	1 (primary)	0.5 m	24 h	10	Operation to be performed at the STC lid (in HI-TRAC).	0.0147
Leak test the port cover seals	2 (primary)	0.5 m	30	10	Operation to be performed at the HI-TRAC Top lid (in HI-TRAC).	0.0294
	1 (secondary)	1.5 m				0.0049
Remove the lead cover and place the top lid on the HI-TRAC and install the lid bolting	2 (primary)	0.5 m	30	10	Operation to be performed at the HI-TRAC Top lid.	0.0294
	1 (secondary)	1.5 m				0.0049

Activity	Number of Personnel	Closest Distance	Total Duration (mins)	Duration at Closest Distance (mins)	Location of personnel	Estimated Person-rem exposure
Leak test of the HI-TRAC top lid	2 (primary)	0.5 m	30	10	Operation to be performed at the HI-TRAC Top lid.	0.0294
	1 (secondary)	1.5 m				0.0049
Measure the dose rate and prepare for transfer operation to the VCT	2 (primary)	0.5 m	30	10	Operation to be performed at the HI-TRAC side.	0.0007
	2(secondary)	10 m				0.00007
Movement of HI-TRAC to Unit 2 FSB	1 (primary)	5 m	90 -120	90 -120	Operation to be performed at the HI-TRAC side.	0.00080
	2 (secondary)	8 m				0.00109
Removal of HI-TRAC lid	2 (primary)	0.5 m	15	5	Operation to be performed at the HI-TRAC Top lid.	0.0147
	1 (secondary)	1.5 m				0.0025
Install lead cover over the annular region and pump out water from the STC/HI-TRAC annulus	2 (primary)	0.5 m	30	10	Operation to be performed at the STC lid (in HI-TRAC).	0.0294
	1 (secondary)	1.5 m				0.0049
Measure the pressure in the STC	2 (primary)	0.5 m	15	5	Operation to be performed at the STC lid.	0.0147
	1 (secondary)	1.5 m				0.0025

Activity	Number of Personnel	Closest Distance	Total Duration (mins)	Duration at Closest Distance (mins)	Location of personnel	Estimated Person-rem exposure
Remove the STC lid bolting and install the lift cleats on the lid	2 (primary)	0.5 m	30	15	Operation to be performed at the STC lid.	0.0441
	1 (secondary)	1.5 m				0.0074
Removal of STC from HI-TRAC. Movement from the truck bay floor to the pool	2 (primary)	6 m	30	15		0.0119
	2 (secondary)	12 m				0.0033
Placement of STC in the pool, removal of the lid	2 (primary)	5 m	15	15	STC is under water in the pool	0.0162
	2 (secondary)	12 m				0.003325
Unloading of the fuel	3 (primary)	n/a	120	120	STC is under water in the pool	0.006
Total Exposure, Person-Rem					primary	0.43
					secondary	0.08

Note 1: Primary personnel consist of operators while secondary personnel include supervisors, quality assurance staff, and health physicists.

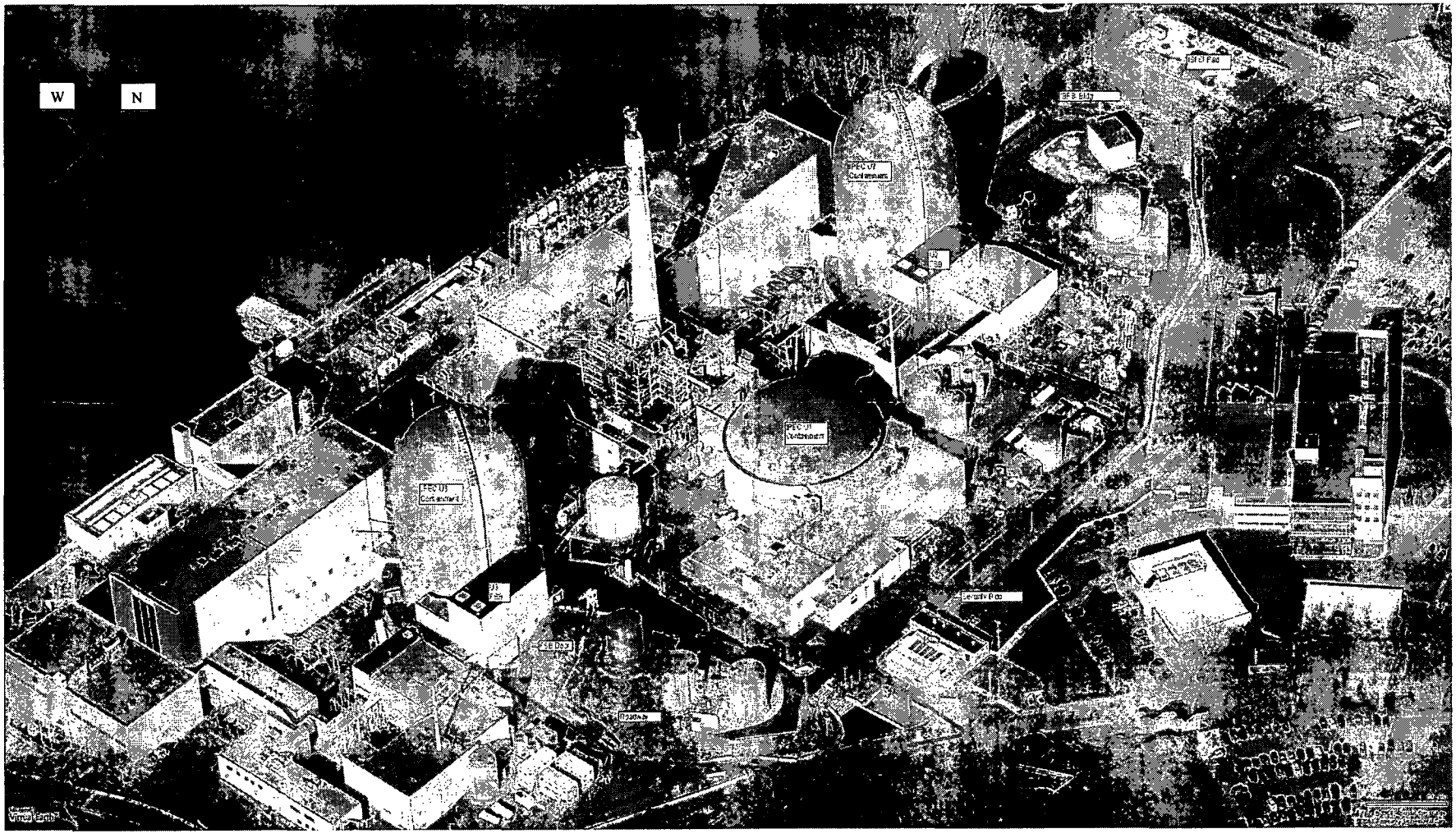

FIGURE 7.4.1
SITE MAP WITH DIFFERENT SITE FEATURES INCLUDING THE ISFSI AND THE HAUL PATH IN RED

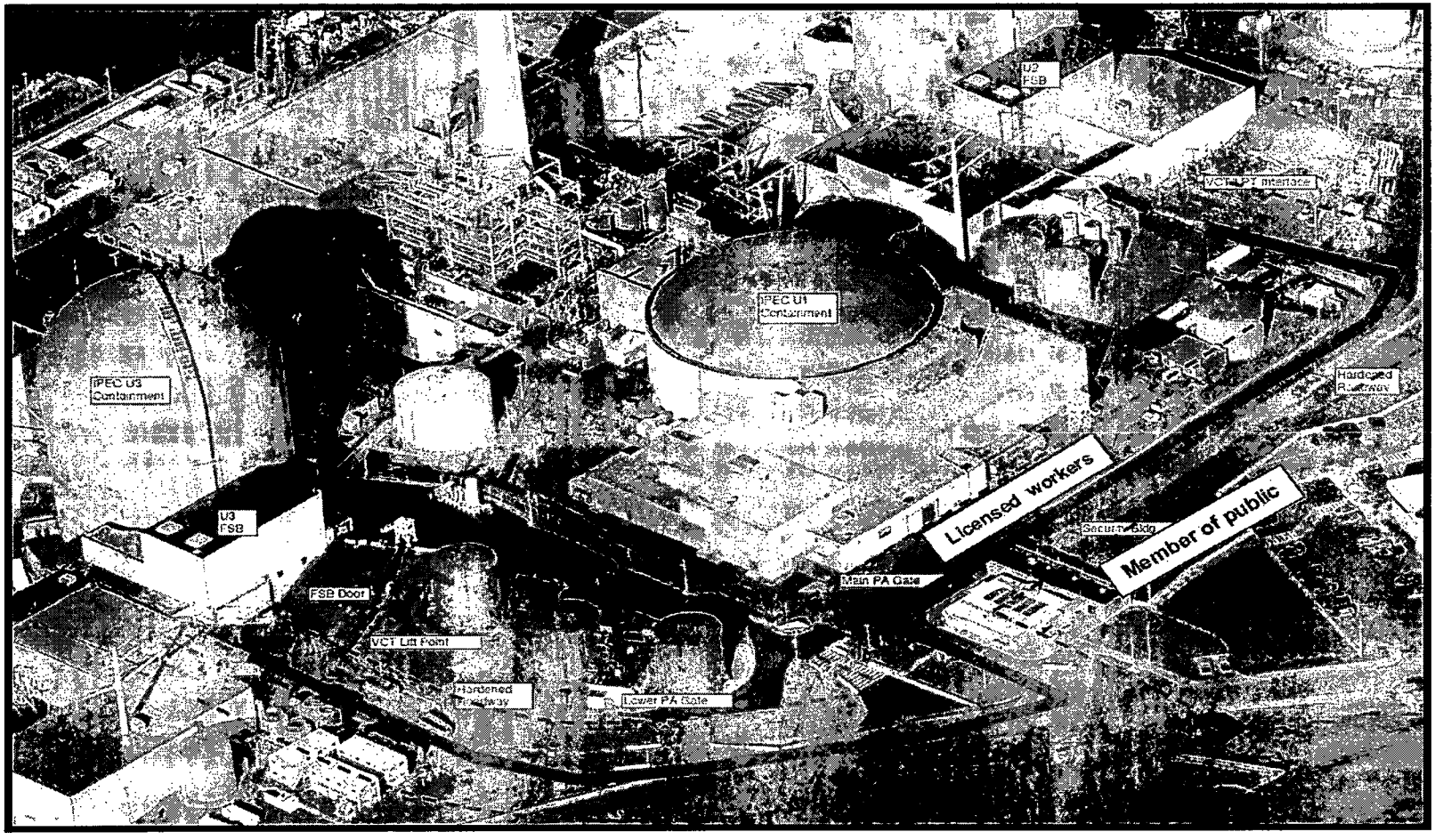

FIGURE 7.4.2
SITE MAP WITH THE HAUL PATH AND RESTRICTED AREA BOUNDARY FOR MEMBER OF PUBLIC

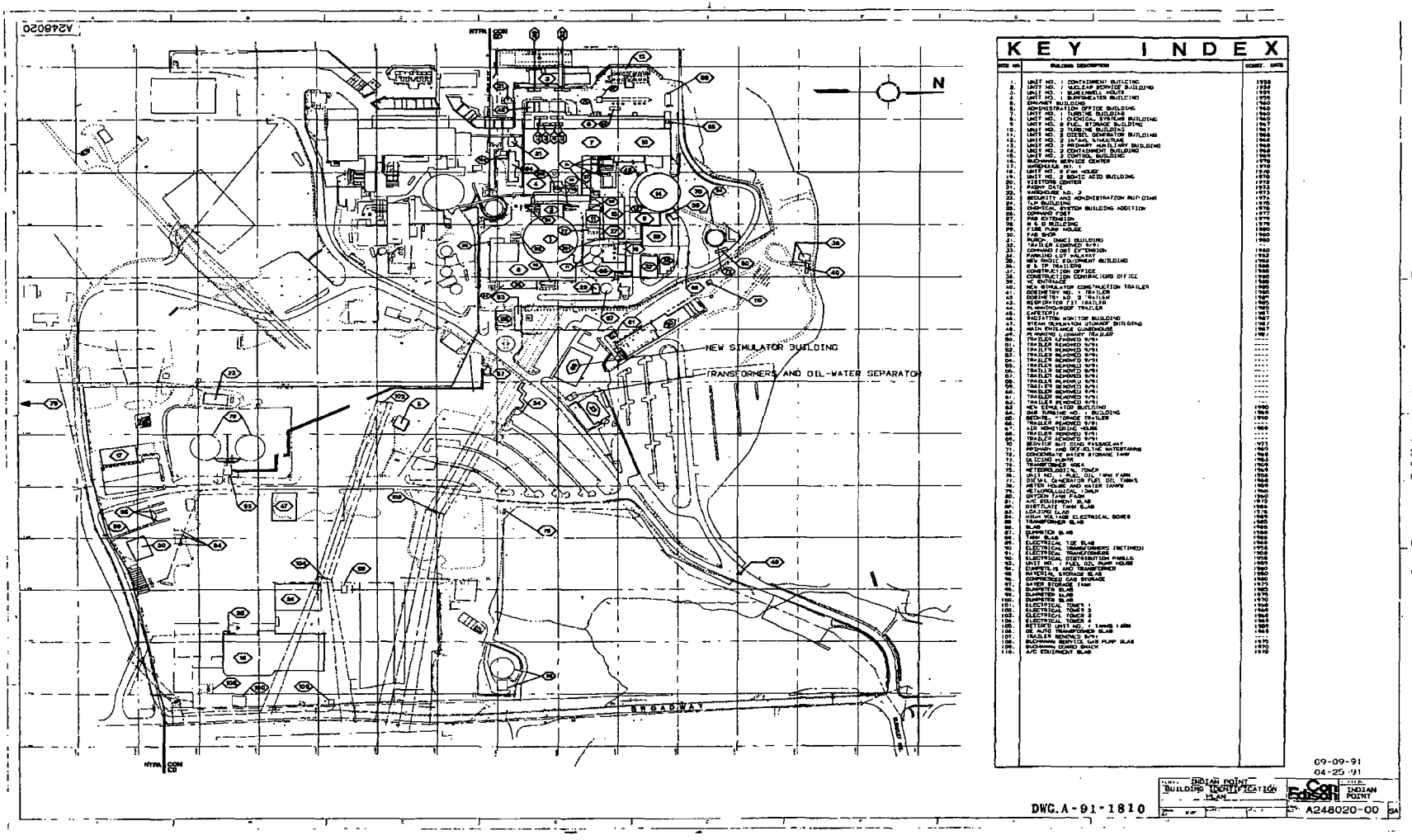

FIGURE 7.4.3
SITE MAP (BUILDING IDENTIFICATION PLAN) SHOWING TRUE NORTH

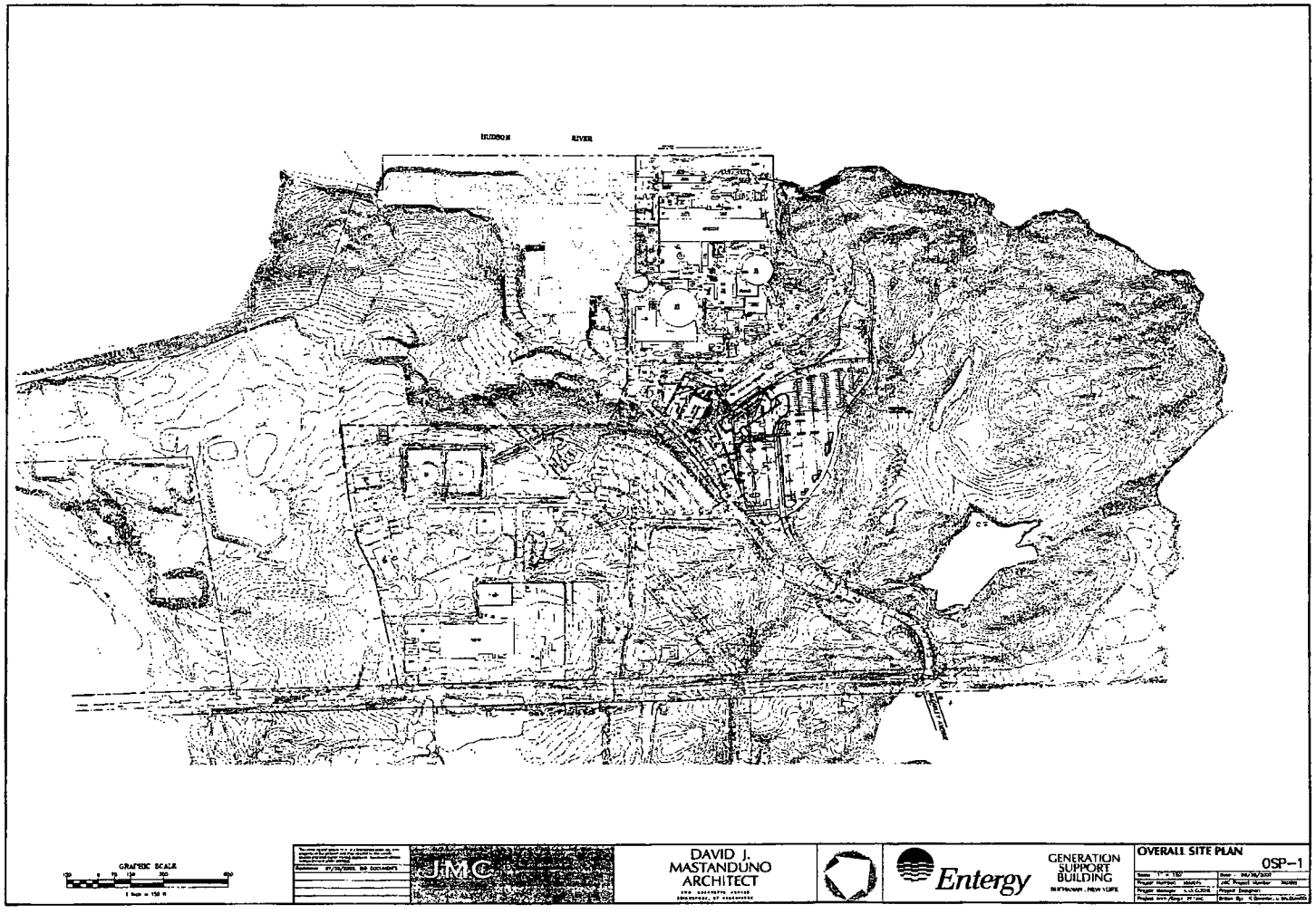

FIGURE 7.4.4
SCALED SITE MAP INDICATING THE TERRAIN

CHAPTER 8: MATERIALS EVALUATION, ACCEPTANCE TESTS AND MAINTENANCE PROGRAM

8.1 Introduction

The suitability of the materials used in the manufacture of SSCs deployed to transfer the IP-3 fuel to the IP-2 pool is considered in this chapter. The NRC guidance documents, such as SFST-ISG-15 [E.O] and SFST-ISG-11 [E.K] have been used in making the safety assessment that all materials used are suitable for their intended purpose. The materials used in the Shielded Transfer Canister (STC) design are the same as those used in HI-TRAC 100D and similarly the materials used in the STC fuel basket are the same as those used in the MPC basket of HI-STORM 100 system. The composition of the materials of the STC and the HI-TRAC are provided in Chapter 7 of this report. The STC and the HI-TRAC will be lifted using ANSI N14.6 [B.S] compliant lifting devices.

8.2 Materials Used

Table 8.2.1 provides a listing of the materials whose stability during the transfer operations is necessary to ensure operational safety and reliability. The table also provides the information on the environment to which the material is subjected.

A brief description of the properties of the materials relevant to their suitability assessment is provided below.

i. Low Carbon Steel:

The carbon steel in the STC is ASME SA516 Grade 70, SA515 Grade 70, SA 350 LF2 or SA36. The material properties of SA516 Grade 70 and SA515 Grade 70 are shown in Tables 3.3.2 of the HI-STORM 100 FSAR [K.A]. The material properties of SA350 LF2 are shown in Table 3.3.3 of the HI-STORM 100 FSAR. The material properties of SA36 are shown in Table 3.3.6 of the HI-STORM 100 FSAR. The standard HI-TRAC 100D top lid is replaced with a solid circular lid which is made of SA 516 Gr. 70 material. The material specified to be used in the STC has been used by Holtec in its dry storage casks for over a decade. All exposed carbon steel surfaces will be coated with stainless steel, nickel alloy or paint specifically selected for performance in the operating environments. Even without coating, no adverse reactions (other than nominal corrosion) have been identified. The material complies with ASME Section II requirement for added assurance of adequate long term performance.

ii. Stainless Steel:

Alloy X is used within this licensing application to designate a group of stainless steel alloys. Alloy X can be any one of the following alloys: Type 316, 316LN, 304, or 304LN. Alloy X shall be used for fabrication of STC basket. Stainless steel has been extensively used in spent fuel racks supplied by Holtec and stored in spent fuel storage pools for over 20 years with both borated and unborated water with no adverse reactions. The material complies with ASME Boiler and Pressure Vessel Code, Section II requirements for added assurance of adequate long term performance.

iii. Bolting Material:

ASME SA 564-630 precipitation hardened, SB 637 NO7718, or SA 193-B8 shall be used for threaded connections. The bolting material properties are shown in Table 3.3.4 of the HI-STORM 100 FSAR except for SA193-B8 material, which can be found in the ASME B&PV Code, Section II, Part D tables [G.B]. The HI-TRAC pool lid bolts, which are re-analyzed in this application due to the HI-TRAC internal pressure, are made of SA 193-B7. The bolting material properties are shown in Table 3.3.4 of the FSAR.

iv. Neutron Absorber: Metamic (classic)

METAMIC is manufactured by Nanotec Metals which is a division of Holtec International.

The following is a description of the manufacturing process for the METAMIC neutron absorber panels. This manufacturing process is equivalent for all applications of METAMIC.

Aluminum alloy 6061 powder and Type 1 ASTM C-750 B_4C powder with a specified minimum B-10 content are analyzed for particle size, screened, and carefully blended to form a lot in an inert atmosphere, without binders or other additives that could potentially adversely influence performance. Each lot will make approximately 200 mixed batches, all with the same isotopic percentage of B-10.

Each mixed batch is further blended and three powder samples are taken from the mixed batch. One sample is tested via wet chemistry to verify the correct B_4C weight percent. The other samples are kept for archiving purposes. This blend of powders is isostatically compacted into a billet under high pressure. Then the billet is vacuum sintered to near theoretical density. The vacuum levels and temperatures are monitored during the process. Each mixed batch will typically make three billets, all with the same B_4C weight percent.

The compacted material (billet) is then extruded into a piece of bloom stock under tight temperature monitoring and controlled extrusion speed. An inert gas blanket prevents oxide formation. The surfaces of the bloom stock are cleaned, either chemically or mechanically, in accordance with written procedures to remove any contaminants which may cause corrosion. Procedures are in place to ensure that the bloom stock remains covered or on surfaces free of

metals such as iron or steel. The cleaning procedure and precautions reduce the amount of contaminants in the final product. The bloom stock is typically cut into two pieces and each is rolled to final thickness and appropriate length using a strict reduction schedule.

Typically two panels are made from each piece of bloom stock. The panel is made by shearing the top, bottom and sides of the rolled piece to the specified length and width. Before shearing to the final length a test coupon that is approximately 4"x6" is sheared from the end of the panel and kept as a permanent record or used for further testing.

Acceptance Criteria

The parameter most important for the criticality control function of the neutron absorber is the so-called B-10 areal density, i.e. the amount of B-10 per unit area of the absorber panel (usually specified as gm B-10/cm^2). While this parameter can be measured in the final product (via neutron attenuation testing), it is not a direct input into the manufacturing process. However, the value is the mathematical product of three input and process parameters, namely the B_4C weight percent of the material, the percent B-10 in the Boron in the B_4C, and the thickness of the panel, together with an appropriate proportionality constant (Equation (1) from the Metamic qualification program documentation [I.B]).

Areal Density (g B-10 /cm^2) = 0.7826 * FB4C * t * ρ * FB-10 (Equation 8-1)

Where: FB4C is the weight percent of B4C in the Metamic
t is the thickness of the panel (cm)
ρ is the density of the Metamic (g/cm^3)
FB-10 is the isotopic percentage of B-10 in the Boron

To provide a robust and conservative acceptance criteria approach, each of these three parameters is controlled independently in the manufacturing process and each parameter must independently meet a specified minimum required value. The density used in the calculations is 99% of the theoretical density. Further, the criticality evaluations are also based on the minimum value of each parameter (with a further reduction per NUREG/CR-5661 [C.H], as discussed below). This approach essentially guarantees that the panels exceed the required areal density. Since the approach uses a worst-case combination of the minimum value for each parameter, no statistical evaluation or criteria is required. The specific requirements are therefore:

- All lots of B_4C will contain boron with an isotopic B-10 content of at least 18.4%.
- The B_4C content in METAMIC® shall be greater than or equal to 31.5 and less than or equal to 33.0 weight percent.
- The Metamic panel thickness must be no less than the minimum thickness specified in the drawings in Section 1.5.

NUREG/CR-5661 identifies the main reason for a penalty in the neutron absorber B-10 density as the potential of neutron streaming due to non-uniformities in the neutron absorber, and recommends comprehensive acceptance tests to verify the presence and uniformity of the neutron absorber for credits more than 75%. Since a 90% credit is taken for METAMIC®, the following criteria must be satisfied:

- The boron carbide powder used in the manufacturing of METAMIC® must have 50% of the particles with particle size less than 25 microns and 97% of the particles with particle size less than 50 microns to preclude neutron streaming.

- The B_4C powder must be uniformly dispersed locally i.e. must not show any particle agglomeration. This precludes neutron streaming.

- The B_4C powder must be uniformly dispersed macroscopically i.e. must have a consistent concentration throughout the entire neutron absorber panel.

Acceptance Testing

To effectively and reliably ensure that all manufactured panels are acceptable, a two-phase approach is used: a) a qualification testing program is performed such that the manufacturing process and procedures consistently result in panels with acceptable parameters and properties. This program also confirms the validity of the wet chemistry tests using neutron attenuation testing; and b) during production runs, the three main parameters are verified for each panel, and neutron attenuation testing is performed on coupons from a percentage of the panels to provide additional assurance. Further details are discussed below.

Qualification Testing Program

The following qualification testing has been performed on the first production runs of METAMIC® panels in order to validate the acceptability and consistency of the manufacturing process and verify the acceptability of the METAMIC® panels for neutron absorbing capabilities:

1) B_4C Content: The boron carbide and aluminum powders were mixed using a documented and approved procedure. The boron carbide powder weight percent was verified by testing samples from forty different mixed batches. The samples were drawn from the top, middle and bottom of the mixing containers after mixing operations were completed. Testing was performed using the wet chemistry method on all three samples to verify that the mixture was uniform.

2) ^{10}B areal density: The expected ^{10}B areal density was verified by testing a sample from one panel from each of approximately forty different mixed batches. The samples were drawn from areas contiguous to the manufactured panels of METAMIC® and were tested using the neutron attenuation test method.

3) Local Uniformity: To verify the local uniformity of the boron particle dispersal, neutron attenuation measurements of random test coupons were performed.

4) Macroscopic Uniformity: To verify the macroscopic uniformity of the boron particle distribution, test samples were taken from the sides of one panel from five different mixed batches before the panels were cut to their final sizes. The sample locations were chosen to be representative of the final product. Neutron attenuation tests were performed on each of the samples. The consistency in neutron attenuation in coupons from the same panel verifies the macroscopic uniformity.

5) Thickness: Five panels were tested at 30 locations each at regular intervals.

6) Wet Chemistry vs. Neutron Attenuation Test: For samples from at least 100 panels, the ^{10}B areal density is determined by wet chemistry and neutron attenuation testing to confirm the validity of the wet chemistry approach. The wet chemistry approach is essentially the determination of the ^{10}B areal density from the measured B_4C content of the mixed samples, together with the B-10 content and panel thickness, as specified in equation 8-1 above from the qualification program documentation [I.B].

The critical parameters of the Metamic panels for the STC basket are essentially identical to those for the HI-STORM storage system with the MPC-68 or MPC-32 [K.A]. The qualification testing for those panels are therefore directly applicable to the panels for the STC basket. The results of the testing program are documented in Holtec's Metamic Sourcebook [I.B].

The result of the qualification testing demonstrated that the manufacturing process produces Metamic panels which meet or exceed the requirements for criticality control. Note that the manufacturing process for production runs is the same as for the qualification process and is documented in Holtec's Metamic Sourcebook.

Testing of Production Runs

To ensure that the above requirements are met the following tests shall be performed during production:

- All lots of boron carbide powder shall be analyzed to meet particle size distribution requirements.

- All lots of B_4C will be certified as containing Boron with a minimum 18.4% of isotopic B-10.

- Wet chemistry testing of a sample from each mixed batch shall be performed to verify the correct boron carbide weight percent is being mixed. The mixing of the batch is controlled via approved procedures.

- The thickness of each final panel will be measured in at least six places, with two at one end, two at the other end and two in the middle.

The measurements of B_4C content, particle size, thickness, and uniformity of B_4C distribution (via wet chemistry test) shall be made using written and approved procedures. If any one of the above criterion is not met, the panel will not be used in the STC. If the wet chemistry results for a mixed batch do not meet the criteria, all panels from the entire mixed batch will not be used in the STC. This ensures the required minimum areal density of the Metamic panels, as shown below, is achieved. The difference in the 90% credit and credited in criticality analysis columns is due to the isotopic percentage of B-10 in the Boron. The criticality analysis uses a minimum of 18.3%, while the acceptance criterion for the Boron is a minimum of 18.4% B-10.

Neutron Absorber Material	Required Minimum Areal Density (^{10}B g/cm^2)	90% Credit Areal Density (^{10}B g/cm^2)	Credited in Criticality Analysis (^{10}B g/cm^2)
Metamic	0.0310	0.0279	0.0277

As additional verification a minimum of 10% of the test coupons shall be tested via neutron attenuation testing to verify the expected B-10 areal density is attained. The neutron attenuation testing will be performed using a 1 inch diameter thermal neutron beam that is calibrated using a solid B_4C plate, and the results will be compared to a known standard whose B-10 content has been checked and verified. This test shall be performed to verify the continued acceptability of the manufacturing process. The B-10 areal density will be compared to the wet chemistry results, using equation 8-1 above from the qualification program documentation [I.B], with the minimum values, as verified above. If a coupon fails the neutron attenuation test, all panels from this mixed batch will be rejected.

Each plate of neutron absorber shall be visually inspected for damage such as scratches, cracks, burrs, peeled cladding, foreign material embedded in the surfaces, voids, and delaminations. Panels are also visually inspected for contamination on the surface. Panels not meeting the acceptance criteria will be rejected. Panels are inspected before being shipped to the cask manufacturing facility and they are subject to an additional receipt inspection prior to installation.

Test and inspection results shall be documented and become part of the cask quality records documentation package.

v. Seals : Elastomeric

The STC's ability to retain its contents relies on elastomeric seals in the top lid as shown in the licensing drawings in Section 1.5. The elastomeric seals chosen for STC must fulfill the principal requirements set down in the following:

- A reasonably uniform compression/decompression characteristic over the temperature range of interest (0°F to 250°F)
- Adequate springback upon withdrawal of the compression load
- Ability to withstand borated water environment
- Excellent radiation resistance
- Well adapted for joints required to withstand impulsive and impactive loads

Seals used may be EPDM, silicone, neoprene and similar elastomers. These seals have a useful service life term and should be replaced as necessary. Replacement intervals for the seals are defined in Table 8.5.1. These seals have performed satisfactorily in spent fuel pools and ambient environments. Seals are selected to meet temperature and pressure requirements. The seals shall be procured as a Safety Related part. The interfacing seating surfaces of the elastomeric seals are stainless steel or clad with nickel alloy or stainless steel to assure long-term sealing performance and to eliminate the potential for localized corrosion of the seal seating surfaces.

The HI-TRAC's ability to retain the annulus water and to act as a secondary boundary also relies on elastomeric seals in the top lid and pool lid as shown in the licensing drawings in Section 1.5. The elastomeric seals chosen for HI-TRAC must fulfill the principal requirements set down in the following:

- A reasonably uniform compression/decompression characteristic over the temperature range of interest (0°F to 250°F)
- Ability to withstand short duration exposure to high temperatures that may occur during a fire accident
- Adequate springback upon withdrawal of the compression load
- Ability to withstand borated water environment
- Excellent resistance to moderate radiation exposure

Seals used may be EPDM, silicone, neoprene and similar elastomers. These seals have a useful service life term and should be replaced as necessary. These seals have performed satisfactorily in spent fuel pools and ambient environments. Seals are selected to meet temperature and pressure requirements. The seals shall be procured as a Safety Related part. The interfacing seating surfaces of the elastomeric seals are carbon steel coated with a smooth corrosion inhibiting epoxy coating to assure long-term sealing performance and to eliminate the potential for localized corrosion of the seal seating surfaces.

The final gasket dimension for the HI-TRAC top lid will be established prior to fabrication. The material shall be silicone rubber or EPDM.

The gasket material for the HI-TRAC pool lid shall be silicone rubber or EPDM.

HOLTEC INTERNATIONAL COPYRIGHTED MATERIAL

Table 8.2.1

MATERIALS AND THEIR ENVIRONMENT

	Component	Material I.D.	Thermal-Hydraulic Environment	Stress* Environment	Radiation† Environment	Expected Duration in Each Transfer Operation
1.	Shielded Transfer Canister	i. Low carbon steel with stainless steel weld overlay for the inner surfaces and Carboguard 890 for outer surfaces ii. Metamic iii. Stainless steel iv. Elastomeric Seal	Borated Water @ < 140°C For expected high temperature limits see Table 3.1.1	Low	Elevated	Normally less than three days but could be up to 30 days.
2.	HI-TRAC	i. Low carbon steel coated with Thermaline 450 for interior surface and with Carboguard 890 for exterior surface ii. Elastomeric Seal	Air @ <140°C Demin. Water @<140°C For expected high temperature limits see Table 3.1.1	Low	Moderate	Normally less than three days but could be up to 30 days.

* Low means stress level below 1/6th of yield strength; moderate means stress level below 1/2 of yield; high means greater than 1/2 yield.
† Low means <5 mR/hr; moderate means < 200 mR/hr; elevated means ≥ 200 mR/hr.

HOLTEC INTERNATIONAL COPYRIGHTED MATERIAL

Table 8.2.2: Critical Characteristics of the STC Confinement Seals

Critical Characteristic	Value[1]
Temperature of Retraction	≤-10°F
Minimum upper operating temperature limit	250°F
Maximum compression set after unloading	50%
Compatibility with borated water	Yes
Minimum radiation tolerance threshold (<50% compression set at exposure)	1E+07 rads
Hardness Range	60-80 Shore A
Minimum Elongation	100%

Note 1: Parker O-Ring EPDM Rubber E0740-75 is a prequalified elastomer which will meet these critical characteristics.

8.3 Degradation Mechanisms

The potential degradation mechanisms considered in this evaluation are:

i. Chemical and galvanic reactions:

Carbon Steel:

In accordance with NRC Bulletin 96-04 [F.C], a review of the potential for chemical, galvanic, or other reactions among the materials of the STC System, its contents and the operating environments, which may produce adverse reactions, has been performed.

The STC utilizes low alloy and nickel alloy carbon steel materials. All of these materials have a long history of non-galvanic behavior within close proximity of each other. The external steel surfaces of the STC are sandblasted and coated with a material which has been proven to preclude surface oxidation. The STC coating does not chemically react with borated water. The coating material to be used on the carbon steel outer surfaces of the STC are provided in Table 8.2.1. This same coating is used on the HI-TRAC which has been placed in the spent fuel pools during many dry storage campaigns. Therefore, chemical or galvanic reactions involving the STC materials are highly unlikely and are not expected.

Metallic coating shall be used on the inside of the STC surface using the classical weld overlay process. The metallic coating will be stainless steel. Stainless steel provides excellent corrosion resistance and is compatible with borated water. Stainless steel provides an inert surface to prevent corrosion at elevated temperatures. It should be noted that since the majority of the STC is in contact with water, the emissivity of the coating is not a critical characteristic in this application (i.e., it does not play a significant role in the thermal performance of the system).

Stainless Steel:

The Shielded Transfer Canister fuel basket utilizes two primary materials (1) Metamic neutron absorber material and (2) Stainless Steel.

The capacity for being passivated is the strength of stainless steels. Steels with chromium content greater than 12% are easily passivated. The addition of nickel markedly facilitates passivation. AISI Type 304 stainless steel contains a minimum of 18% chromium and 8% nickel. The passive films of stainless steels range between 10 to 50 angstroms (0.04 to 0.2 microinches) thick (Peckner & Bernstein, pp 16-17 [J.D]). Of all types of stainless steels (i.e., austenitic, ferritic, martensitic, precipitation hardenable and twophase), "the austenitic stainless alloys are considered the most resistant to industrial atmospheres and acid media" [J.D]. The results of experimental evaluations of stainless steel corrosion confirm the validity of this statement.

Experimental corrosion data for AISI Type 304 and 316 stainless steels (Swedish Designations SIS-14-2333 and SIS-14-2343, respectively) are available from the Swedish Avesta Jernverk laboratory. Corrosive media evaluated in these tests include 4% (40,000 ppm) and 20% (200,000 ppm) boric acid solutions and water, all at boiling. Under the evaluated conditions, the tested steels are identified as "fully resistant", with corrosion rates of less than 0.1 mm per year.

An even more extensive set of experimental corrosion data is available from ASM International [J.E]. For test conditions without rapid agitation, similar to conditions that would exist during STC fuel loading in a spent fuel pool, all austenitic stainless steels available for STC fuel basket fabrication (i.e., AISI Types 304, 304L) are resistant to corrosion in boric acid and water. No structural effects from corrosion from treated and borated water environments are expected.

Various NRC Information Notices, Bulletins, Generic Letters, and Circulars [F.C] have been reviewed in an effort to gain additional industry experience on corrosion of stainless steels. It is recognized that stainless steels in borated water and treated water (demineralized water) environments are susceptible to loss of material due to pitting corrosion and cracking due to intergranular stress corrosion cracking (IGSCC) attack but these mechanisms depend greatly on the presence of halogens and oxygen or the presence of sulfates and oxygen coupled with high stress and high temperature. Spent fuel pool and treated water chemistry programs normally keep the concentrations of halogens and sulfates at very low levels for the very same reason of avoiding corrosion problems not only with spent fuel assemblies but with other systems such as those that are relied upon for the operation of the spent fuel pool. In addition, stringent controls on water conductivity, which is essentially a measure of impurities, further limits corrosion in treated and borated water environments. Borated and treated water are considered as having a negligible effect on the stainless steel.

Corrosion products cause "crud" deposits on fuel assemblies. Crud, which is stable in oxygenated solutions, is not likely to contain materials that can react with stainless steel in any appreciable amount. Crud may leave a slight film of rust on the interior surfaces of the STC during fuel loading and closure activities.

Stainless steels have been extensively used in spent fuel storage pools with both borated and unborated water with no adverse reactions or interactions with spent fuel.

Metamic:

Once passivated, alloys of aluminum are extremely resistant to chemical attack. Experimental corrosion data for aluminum and its alloys from ASM International [J.E] shows that these materials are resistant to corrosion in both boric acid solutions and water. With respect to solutions of boric acid, ASM states "aqueous solutions of 1 to 15% boric acid at 60°C (140°F) did not attack the aluminum alloys 1100, 3003 or 6061". The aluminum used in manufacturing Metamic is either alloy 1100 or alloy 6061. With respect to water, ASM states "the slight reaction that occurs initially ceases almost completely within a few days after development of a protective oxide film of equilibrium thickness. After this conditioning period, the amount of

metal dissolved by the water becomes negligible." These statements from ASM describe the process of passivation.

Neutron absorber materials and stainless steel have been used in close proximity in wet storage for over 30 years. Many spent fuel pools at nuclear plants contain fuel racks, which are fabricated from neutron absorber materials and stainless steel materials, with similar geometries. Not one case of chemical or galvanic degradation has been found in fuel racks built by Holtec. This experience provides a sound basis to conclude that corrosion will not occur in these materials.

ii. Brittle fracture

The STC basket is constructed from a series of stainless steels listed above. These stainless steel materials do not undergo a ductile-to-brittle transition in the minimum temperature range of the STC.

The STC enclosure vessel is constructed from carbon steel materials which is the same material used in Holtec's dry storage transfer cask HI-TRAC. The fracture toughness test requirements for the STC enclosure vessel are discussed in Subsection 8.4.5. The HI-TRAC brittle fracture is analyzed in Subsection 3.1.2 of the HI-STORM 100 FSAR.

iii. Fatigue

The STC is designed for repeated normal condition handling operations with high factor of safety, particularly for the lifting trunnions, to assure structural integrity. The resulting cyclic loading produces stresses that are well below the endurance limit of the trunnion material, and therefore, will not lead to a fatigue failure. All other off-normal or postulated accident conditions are infrequent occurrences that do not contribute significantly to fatigue. In addition, the STC utilizes materials that are not susceptible to brittle fracture during the lowest temperature permitted for loading.

The STC fuel basket is subject to cyclic temperature fluctuations. These fluctuations result in small changes of thermal expansions and pressures inside the STC. The loads resulting from these changes are small and do not significantly contribute to the "usage factor" of the STC.

As described in Chapter 6, the STC trunnions are designed to ANSI N14.6 and procedures will implement operating and inspections requirements from ANSI N14.6.

iv. Stress corrosion/cracking

Temperature distribution results obtained from this highly conservative thermal model show that the maximum local STC basket temperature level is below the recommended limits for structural materials in terms of susceptibility to stress, corrosion and creep-induced degradation.

Furthermore, stresses induced due to imposed temperature gradients are within Code limits (See Structural Evaluation Chapter 6).

v. Loss of neutron capture capability

Unlike silicone polymer type neutron absorber material such as Boraflex, which has a history of degradation under radiation in wet storage use, Metamic neutron absorber is a metal matrix composite (MMC) consisting of a matrix of aluminum reinforced with Type 1 ASTM C-750 boron carbide. Metamic is characterized by extremely fine aluminum (325 mesh or smaller) and boron carbide (B_4C) powder. Typically, the average B_4C particle size is between 10 and 40 microns. The high performance and reliability of Metamic derives from the fineness of the B_4C particle size and uniformity of its distribution, which is solidified into a metal matrix composite structure by the powder metallurgy process. This yields excellent homogeneity and a porosity-free material. As stated earlier Metamic has been extensively studied and characterized by multiple independent organizations over many years including EPRI and Holtec. None of the test results have shown any sign of degradation or loss of neutron capture capability in the Metamic. USNRC has approved the use of Metamic for a number of plants mentioned in the previous sections.

vi. Generation of flammable gases and risk of combustion

Because Metamic is a solid material there is no capillary path through which spent fuel pool water can penetrate Metamic panels and chemically react with aluminum in the interior of the material to generate hydrogen. Any chemical reaction of the outer surfaces of the Metamic neutron absorber panels with water to produce hydrogen occurs rapidly and reduces to an insignificant amount in a short period of time. Since the STC lid is bolted and there are no welding and cutting operations involved, there is no concern for combustion.

vii. Swelling of neutron absorber

Because Metamic is a porosity-free material, there is no capillary path through which spent fuel pool water can penetrate Metamic panels and chemically react with aluminum in the interior of the material to generate hydrogen. Thus, the potential of swelling and generation of significant quantities of hydrogen is eliminated.

8.4 Acceptance Tests

In this section the inspections and acceptance tests to be performed on the STC prior to its use are summarized. These inspections and tests provide adequate assurance that the STC has been fabricated, assembled and accepted for use and loading under the conditions specified in this report.

Inspections and acceptance tests for the HI-TRAC 100D are contained in the HI-STORM 100 FSAR [K.A].

8.4.1 Visual Inspections and Measurements

The STC shall be assembled in accordance with the licensing drawings supplied in Section 1.5 and the applicable STC Technical Specifications. The drawings provide nominal dimensions that define the limits on the dimensions used in licensing basis analysis. Fabrication drawings will provide any additional dimensional tolerances necessary to ensure component fit-up. Visual inspections and measurements shall be made and controls shall be exercised to ensure that the packaging conforms to the dimensions and tolerances specified on the fabrication drawing. These dimensions are subject to independent confirmation and documentation in accordance with the Holtec QA program approved in NRC Docket No. 71-0784.

The following shall be verified as part of visual inspections and measurements:

- Visual inspections and measurements shall be made to ensure that the effectiveness is not significantly reduced. Any *safety* related component found to be under the specified minimum thickness shall be repaired or replaced as required.
- Visual inspections shall be made to verify that neutron absorber panels are present as required by the basket design.
- The corrosion inhibiting coatings/overlay on the inside and outside of the STC shall be visually inspected to verify that it fully covers carbon steel surfaces and is free of macroscopic pores and hide-out ridges that may be difficult to decontaminate.
- The packaging shall be inspected for proper cleanliness and preparation for use in accordance with written and approved procedures.

The visual inspection and measurement results for the STC shall become part of the quality documentation package.

8.4.2 Weld Examination

The examination of STC welds shall be performed in accordance with the drawings in Section 1.5 and applicable codes and standards. Weld examinations and repairs shall be performed in accordance with applicable codes and standards. All weld inspections shall be performed in accordance with written and approved procedures by personnel qualified in accordance with

SNT-TC-1A [H.B]. All required inspections, examinations, and tests shall become part of the final quality documentation package.

8.4.3 Structural and Pressure Tests

The STC shall be tested by a specified combination of methods as required by Section III, Subsection ND of the ASME B&PV Code, to verify that it is free of cracks, pinholes, uncontrolled voids or other defects that could significantly reduce the effectiveness during its service life. The STC shall be subjected to a one-time hydrostatic pressure test in accordance with ASME Code Section III, Subsection ND, Article ND-6000 prior to the first fuel loading. This test will be performed at the fabrication facility. The minimum test pressure shall be 62.5 psig which is 125% of the design pressure for the STC as defined in Table 3.2.1. The test will be conducted with the STC supported by either the top lid or the lifting trunnions to maximize the loads on the confinement boundary welds. Following completion of the hydrostatic pressure test, all joints, connections, and regions of high stress such as regions around openings and thickness transition sections shall be examined for leakage. Any evidence of leakage shall be cause for rejection, or repair and retest, as applicable.

The HI-TRAC shall be subjected to a one-time hydrostatic pressure test in accordance with ASME Code Section III, Subsection ND, Article ND-6000 prior to the first fuel loading to demonstrate that the pool lid seal and the pool lid drain plug are suitable for the design pressure. The minimum test pressure will be 125% of the design pressure for the HI-TRAC as defined in Table 3.2.1. When performing the test, the HI-TRAC shall be supported by the trunnions. The HI-TRAC shall be loaded with a full weight STC or STC mock-up and filled with water to fully load the pool lid bolting and bottom flange welds. As an alternative to using the full weight STC, the test pressure may be increased to account for the missing weight. The acceptance criteria for the pressure test shall include no visible water leakage from the pool seal and drain plug as well as the rest of the HI-TRAC water boundary. All joints, connections, and regions of high stress such as regions around openings and thickness transition sections shall be examined for leakage. Any evidence of leakage shall be cause for rejection, or repair and retest, as applicable. Following completion of the required hold period at the test pressure, a visual inspection of accessible areas will be made and any evidence of cracking or deformation shall be cause for rejection, or repair and retest, as applicable.

Prior to initial use, the STC Lifting Trunnions and Lifting Attachment shall be load tested in accordance with the requirements of ANSI N14.6. The test shall be performed at 300% of the maximum design lifting load (80,000 lbs). The accessible parts and the local areas surrounding their attachments shall then be visually examined to verify no deformation, distortion, or cracking has occurred. Any evidence of deformation (other than minor localized surface deformation due to contact pressure), distortion or cracking of the trunnion, lifting attachment, or adjacent cask areas shall require repair or replacement followed by retesting of the component.

8.4.4 Leakage Tests

Leakage testing shall be performed per written and approved procedures and in accordance with the requirements of ANSI N14.5 [B.T]. The confinement boundary leakage rate acceptance criteria is "leak-tight" per ANSI N14.5 as referenced in Chapter 7 of this report.

The entire STC confinement boundary shall be leak tested at the factory prior to initial use to demonstrate that the leakage rate meets the criteria for "leak-tight" as defined in ANSI N14.5 (Fabrication Test). The confinement boundary material and welds will be tested using the gas filled envelope (gas detector) method or other applicable method per ANSI N14.5. The seals on the STC lid and lid cover plates shall be leak tested using the evacuated envelop (gas detector) method, or other suitable method as described in ANSI N14.5. The leakage rate acceptance criteria is "leak-tight" as defined in ANSI N14.5.

The HI-TRAC pressure boundary will be tested to ensure that it is water tight to prevent the loss of water from the annular region during fuel transfer operations. The HI-TRAC pool lid seal and drain plug shall be leak tested during the hydrostatic pressure test described in Section 8.4.3 above. The acceptance criteria for the leak test shall be no visible water leakage from the pool seal and drain plug.

The HI-TRAC top lid seals shall be leak tested using the soap bubble test method on the main seal and the gas pressure rise method on the vent port cover. Testing will be performed in accordance with the requirements of ANSI N14.5. Other suitable leak test methods described in ANSI N14.5 may be used as an alternative for leak testing the top lid seals. The leakage rate acceptance criteria is defined in Table 7.4.7. The absence of any bubbles during a soap bubble test shall be defined to be a leakage rate of less than 10^{-3} std cc/sec.

In case of an unsatisfactory leakage rate, weld repair, seal surface cleaning/repair, or seal/drain plug change and retest shall be performed until the test acceptance criterion is satisfied.

Leakage testing results shall become part of the quality documentation package.

8.4.5 Component and Material Tests

The STC closure seal is an elastomeric seal and conservatively specified to provide a high degree of assurance of sealing function under normal and accident conditions. Seal tests under the most severe service conditions including performance at pressure under high and low temperatures will not challenge the capabilities of these seals and thus are not required.

The majority of the STC materials are ferritic steels. ASME Code Section III requires that certain materials be tested in order to assure that these materials are not subject to brittle fracture failures. The test requirements for STC components subject to brittle fracture testing are listed in Table 8.4.1. Test results shall become part of the final quality documentation package.

Since the STC lead shielding will be installed as lead sheets rather than poured, it is not necessary to perform a shielding effectiveness test. The design of the sections and the installations instructions shall minimize the gaps between adjacent lead sections and between the lead and the STC walls to the extent practicable. However, as additional defense-in-depth, a gamma scan will be performed on the completed STC to verify the shielding effectiveness.

The lead sheet will be layered for a minimum total thickness as specified on the licensing drawings found in Section 1.5 and the applicable STC Technical Specifications. All sheets regardless of thickness shall be measured for thickness in at least four corner locations, at a minimum of two inches from any edge. The effectiveness of each lead sheet shall be verified by visual examination. The visual examination includes absence of cracks, pores, inclusions, scratches, grooves, or other types of defects that could impair the gamma shielding function of the lead. If gap of 1/8" or greater exists around the perimeter, lead shims and/or lead wool is used to fill in the gaps. The lead wool shall be suitably compressed to remove voids. If multiple sections are used to make a layer, they are butted up tight against one another and any gaps are filled with lead wool as described above. If multiple sections are used to make the layers, the joints between the sections are staggered to eliminate any potential streaming paths. Each sheet with a nominal thickness greater than 3/16" (nomimal) shall be ultrasonically inspected for the purpose of verifying that the lead sheets are free of volumetric or other defects that could diminish the gamma shielding function. The sheets shall be ultrasonically (UT) inspected by the pulse-echo straight-beam direct contact method. The UT testing will take place before the installation of the sheets. The UT testing ensures that the sheets are uniform internally. This is an accepted industry procedure for locating voids within the lead sheets in order to verify the shielding effectiveness of the sheets.

The effectiveness of the lead installation in the STC body shall be verified after fabrication by performing a gamma scan on the accessible surfaces of the canister in the lead shielding region. The purpose of the gamma scan test is to demonstrate that the lead shielding is free from voids that may result in streaming paths through the lead. Measurements shall be taken on a 6-inch by 6-inch (nominal) grid pattern over the surfaces to be scanned. Any gamma dose rates that vary significantly from the average gamma dose measurements, accounting for the presence of the STC ribs as applicable, shall be evaluated by Holtec to determine the effect on the dose

calculations provided for the STC. Should the measured calculations using the measured gamma dose rates show that the calculated dose rates will exceed the dose rates used to license the STC, corrective actions should be taken, if practicable, and the testing re-performed until successful results are achieved. If physical corrective actions are not practicable, the degraded condition may be dispositioned with a written evaluation in accordance with applicable procedures to determine the acceptability of the STC for service. Gamma scanning shall be performed in accordance with written and approved procedures. Measurements shall be documented and shall become part of the quality documentation package.

Table 8.4.1: Fracture Toughness Test Requirements for the STC components				
Component Name	**Item No. (see note 1)**	**Test Requirement**	**Test Temperature (see note 2)**	**Acceptance Criteria**
STC Base Plate	3	Per ND-2331	0°F	Required C_v Lateral Expansion Values per Table ND-2331(a)-1 Required C_v Energy Values per Table ND-2331(a)-2
STC Closure Lid	4	Per ND-2331	0°F	Required C_v Lateral Expansion Values per Table ND-2331(a)-1 Required C_v Energy Values per Table ND-2331(a)-2
STC Inner Shell	7	Per ND-2331	0°F	Required C_v Lateral Expansion Values per Table ND-2331(a)-1 Required C_v Energy Values per Table ND-2331(a)-2
STC Outer Shell	8	Per ND-2331	0°F	Required C_v Lateral Expansion Values per Table ND-2331(a)-1 Required C_v Energy Values per Table ND-2331(a)-2
STC Upper Flange	9	Per ND-2331	0°F	Required C_v Lateral Expansion Values per Table ND-2331(a)-1 Required C_v Energy Values per Table ND-2331(a)-2
STC Closure Lid Stud	11	Per ND-2333	0°F	Required C_v Values per Table ND-2333-1

Notes:

1. Item numbers are in accordance with the STC drawing 6013.
2. Test temperature shall be less than or equal to the Lowest Service Temperature per ND-2331(a). The Lowest Service Temperature for the HI-TRAC Transfer Cask, which carries the loaded STC, is specified as 0°F in the HI-STORM 100 FSAR (Docket No. 72-1014). Therefore, the Lowest Service Temperature for the STC is also set at 0°F.

8.5 Maintenance Program

An ongoing maintenance program is defined and incorporated in the Operations & Maintenance (O&M) Manual, which will be prepared and issued prior to the delivery and first use. This document shall delineate the detailed inspections, tests, and parts replacement necessary to ensure continued radiological safety, proper handling, and continued performance of the STC in accordance with the design requirements and criteria contained in this report.

There are no active components or systems required to assure the continued performance of the safety functions. As a result, only minimal maintenance will be required over its lifetime, and this maintenance would primarily result from weathering effects and pre- and post-usage requirements. Typical of such maintenance would be the removal of scratches, dents, etc. from accessible external surfaces to eliminate locations for potential contaminant hideout; seal replacement; and re-coating surfaces. Such maintenance requires methods and procedures no more demanding than those routinely used at power plants.

A maintenance program schedule is provided in Table 8.5.1.

8.5.1 Structural and Pressure Tests

Periodic structural or pressure tests on the cask following the initial acceptance tests are not required to verify continuing performance. Maintenance pressure testing (as defined in ANSI N14.5) of the STC and HI-TRAC is not required following the initial acceptance tests to verify continuing performance unless repairs of the equipment were performed. If safety related structural or pressure retaining components of the STC or HI-TRAC are repaired, then re- test will be required as described in the Acceptance Testing Section 8.4.3.

8.5.2 Leakage Tests

The seals on the STC and HI-TRAC lid shall be inspected for cuts, tears, flat spots, , and other deformities that may compromise their sealing ability. Damaged seals shall be discarded and replaced. The seals shall be replaced as defined in Table 8.5.1.

Leakage testing shall be performed per written and approved procedures and in accordance with the requirements of ANSI N14.5. The confinement boundary leakage rate acceptance criteria is "leak-tight" per ANSI N14.5 as referenced in Chapter 7 of this report. With respect to the leak testing, the STC and HI-TRAC top lid closures and the HI-TRAC pool lid seal and drain plug are tested per the requirements defined in Table 8.5.1. Test methods and acceptance criteria are as described below. Therefore, periodic leak testing (as defined in ANSI N14.5) of the HI-TRAC is not required.

The seals on the STC lid and lid cover plates shall be tested at a frequency defined in Table 8.5.1. The seals shall undergo a periodic leakage test to confirm that the confinement

capabilities have not deteriorated over an extended period of use. The periodic leakage test of the seals shall be performed using the evacuated envelop (gas detector) method, or other suitable method as described in ANSI N14.5. The leakage rate acceptance criterion is "leak-tight" as defined in ANSI N14.5. The seals shall undergo a pre-transfer leakage test to confirm that the confinement system has been properly assembled for fuel transfer. The pre-transfer leakage test of the seals shall be performed using the gas pressure rise method, or other suitable method as described in ANSI N14.5. The acceptance criterion is no detected leakage when tested to a sensitivity of 1×10^{-3} ref. cc/sec. Failure to achieve a leakage rate below the required value shall be cause for seal replacement, seating surface repair, or other repair and retest of the seal joint as applicable.

The STC confinement boundary components shall be leakage tested following any maintenance repair which may affect the confinement boundary function to demonstrate that the leakage rate is "leaktight" as defined in ANSI N14.5. Seal replacement shall initiate the need for the maintenance leakage test of the seal (ANSI N14.5, Section 7.4). The confinement boundary material and welds will be tested using the gas filled envelope (gas detector) method or other applicable method per ANSI N14.5. The seals and sealing surfaces on the STC lid and lid cover plates shall be leak tested using the evacuated envelop-gas detector method, or other suitable method as described in ANSI N14.5. The leakage rate acceptance criterion is "leaktight" per ANSI N14.5.

The HI-TRAC pool lid seal and drain plug shall be leak tested at a frequency defined in Table 8.5.1. The test pressure shall be a minimum of 125% of the design pressure for the HI-TRAC as defined in Table 3.2.1. When testing the pool lid seal, the test pressure shall be increased to account for the weight of the STC and annulus water, or the HI-TRAC shall be loaded with a full weight STC or STC mock-up and filled with water to fully load the pool lid bolting. During the test, the HI-TRAC shall be supported from its trunnions to maximize the loading of the confinement boundary components. The acceptance criteria for the pressure test shall be no visible water leakage from the pool lid seal and drain plug. Any evidence of leakage shall be cause for seal or drain plug replacement, seal seating surface repair, or other repair and retest of the seal joint, as applicable.

The HI-TRAC top lid seals shall be leak tested at a frequency defined in Table 8.5.1. The seals shall be tested using the soap bubble test method on the main seal and the gas pressure rise method on the vent port cover. Testing will be performed in accordance with the requirements of ANSI N14.5. The leakage rate acceptance criterion is no detected leakage when tested to a sensitivity of 1.0×10^{-3} ref. cc/sec.. The absence of any bubbles during a soap bubble test shall be defined to be a leakage rate of less than 1×10^{-3} std cc/sec. Failure to achieve a leakage rate below the required value shall be cause for seal replacement, seal seating surface repair, or other repair and retest of the seal joint as applicable.

8.5.3 Component and Material Tests

8.5.3.1 Surfaces

Accessible surfaces shall be visually inspected prior to each fuel loading campaign for surface (superficial) and component damage including surface denting, surface penetrations, deformation and distortion of components, weld cracking, chipped or missing coatings, etc. Any evidence of deformation, distortion or cracking will require repair of the equipment. The corrosion inhibiting coatings/overlay on the inside and outside of the STC shall be visually inspected to verify that it fully covers carbon steel surfaces. The exterior of the STC shall be visually examined to verify that it is free of macroscopic pores and hide-out ridges that may be difficult to decontaminate. Prior to each loading campaign, the exterior surface of the STC shell and the interior surface of the HI-TRAC body and lid will be visually examined for surface denting, surface penetrations, overlay cracking, and chipped or missing coatings. The acceptance criteria for the thermal spray or weld overlay on the STC will be the same as used for the initial acceptance, which is that the coating must cover the entire exposed surface of the STC carbon steel components and must be free of macroscopic pores and hide-out ridges that may be difficult to decontaminate. Inspections will be conducted and findings will be identified and resolved in accordance with Entergy's Corrective Action program.

Damage to components shall be evaluated for impact on safety and components shall be repaired or replaced accordingly. Repairs which affect the pressure retaining function of the STC or HI-TRAC will require repeating of the pressure test described in Section 8.4.3. Wear and tear from normal use will not impact safety. Repairs or replacement in accordance with written and approved procedures, as set down in the O&M manual, shall be required if unacceptable conditions are identified.

The STC internals will be visually inspected for evidence of gross damage to the basket and neutron absorber sheathing that may affect criticality control prior to each loading campaign. Missing or torn sheathing and/or neutron absorbers will be evaluated for effects on criticality control. Inspections will be conducted and findings will be identified and resolved in accordance with Entergy's Corrective Action program.

Prior to installation or replacement of a seal, the cask sealing surface shall be cleaned and visually inspected for scratches, pitting or presence of an unacceptable surface finish. The affected surface areas shall be restored as necessary in accordance with written and approved procedures.

8.5.3.2 Bolts

Closure bolting shall be visually inspected for damage such as excessive wear, galling, or indentations on the threaded surfaces prior to installation. The severity of thread damage shall be evaluated as set forth in the STC O&M manual. Damaged bolting and/or fasteners shall be

replaced accordingly. Closure lid bolting shall be replaced in accordance with the requirements of Table 8.5.1. One bolting cycle is the complete sequence of torquing and removal of bolts.

8.5.3.3 Lifting Devices

Lifting devices shall be inspected prior to each fuel loading. The accessible parts and the local areas surrounding their attachments shall then be visually examined to verify no deformation, distortion, or cracking has occurred. Any evidence of deformation (other than minor localized surface deformation due to contact pressure), distortion or cracking of the trunnion, lifting attachment, or adjacent cask areas shall require repair. All special lifting devices, along with the STC trunnions and lifting attachments and HI-TRAC trunnions, shall be maintained and inspected in accordance with ANSI N14.6. In lieu of annual load testing of special lifting devices, dimensional inspections and surface examinations may be used to recertify the device as permitted by ANSI N14.6.

8.5.3.4 Closure Seals

The closure seals are shipped from the factory pre-inspected and carefully packaged. Prior to each use, inspect seals and sealing surfaces for conditions that affect sealing capability. Unacceptable conditions include cuts, tears, and flat spots in seals exceeding 50% of the nominal compression, and gouges, deep scratches cutting across the seal surface, excessive pitting, and contamination on the seal surfaces. Damaged seals shall be replaced. Seal surfaces shall be cleaned and/or repaired as necessary to ensure the seal can maintain the appropriate leakage rate criterion.

8.5.3.5 Neutron Absorber: Metamic

A surveillance program will be implemented to monitor the performance of Metamic by installing a minimum of four bare coupons near the maximum gamma flux elevation (mid height) at no less than four circumferential downcomer areas around the STC fuel basket (see the licensing drawing). At any time during its use the STC must have a minimum of one coupon installed in each quadrant. Metamic coupons used for testing must have been installed during the entire fuel loading history of the STC.

The following performance confirmation testing regimen shall be carried out in accordance with a written procedure and surveillance plan. These specifications apply:

(i) Coupon size will be nominally 4" x 6". Each coupon will be marked with a unique identification number.

(ii) Pre-characterization testing: Before installation, each coupon will be measured and weighed. The measurements shall be taken at locations pre-specified in the test program. Each coupon shall be tested by neutron attenuation before installation in the STC. The weight, length, width, thickness, and results of the neutron attenuation testing shall be documented and retained.

(iii) Four coupons will be tested on the schedule listed in Table 8.5.1. The coupons shall be measured and weighed and the results compared with the pre-characterization testing data. The results shall be documented and retained.

(iv) The coupons shall be examined for any indication of swelling, delamination, edge degradation, or general corrosion. The results of the examination shall be documented and retained.

(v) The coupons shall be tested by neutron attenuation and the results compared with the pre-characterization testing data. The results of the testing shall be documented and retained. Results are acceptable if the measured value is within +/-2.5% of the value measured for the same coupon at manufacturing.

(vi) The coupons shall be returned to their locations in the STC unless anomalous material behavior is found. If the results indicate anomalous material behavior, evaluation and corrective actions shall be pursued.

Table 8.5.1
Maintenance and Inspection Program Schedule

Task	Frequency
External surface (accessible) visual inspection	Prior to each fuel transfer
Bolting visual inspection	Prior to each fuel transfer
Lifting devices and trunnion visual inspection	Prior to each fuel transfer
Lifting devices and trunnion dimensional inspections and surface examinations	Once every 12 months or prior to each loading campaign.
Periodic Leakage Test of STC (lid and lid cover plates) seals	Within 12 months prior to each fuel transfer. Acceptance criterion is "leak-tight" as defined in ANSI N14.5.
Pre-transfer Leakage Test of STC (lid and lid cover plates) seals	Following each fuel loading, prior to fuel transfer. Acceptance criteria for each seal is no detected leakage when tested to a sensitivity of 1.0×10^{-3} ref. cc/sec. (ANSI N14.5, Section 7.6)
Maintenance Leakage Test of STC (lid and lid cover plates) seals	Following seal replacement. Acceptance criteria is "leak-tight" as defined in ANSI N14.5.
Leakage Test of HI-TRAC top lid seals.	Following each fuel loading, prior to fuel transfer. Acceptance criteria is no detected leakage when tested to a sensitivity of 1.0×10^{-3} ref. cc/sec.
STC lid seal replacement	Every 6 fuel transfers or as necessary based on inspection results or failure to seal
HI-TRAC top lid seal replacement	Prior to each loading campaign or as necessary based on inspection results or failure to seal.
STC Closure bolt replacement	Every 240 bolting cycles
STC/HI-TRAC top lid seal inspection	Prior to each fuel transfer
HI-TRAC Top Lid bolt replacement	Every 1000 bolting cycles
HI-TRAC Pool Lid seal replacement	Prior to each loading campaign or as necessary based on inspection results or failure to seal.
Leakage Test of HI-TRAC Pool Lid seal and drain plug	Once every 12 months or prior to each loading campaign.
Metamic coupon testing	Four coupons shall be tested at the end of each inter-unit fuel transfer campaign. A campaign shall not last longer than two years.

HOLTEC INTERNATIONAL COPYRIGHTED MATERIAL

Note: The term "fuel transfer" when used in this chapter means the transfer of the STC containing fuel between units IP-3 and IP-2.

CHAPTER 9: ECONOMIC AND ENVIRONMENTAL CONSIDERATIONS

Referenced as USNRC GL 78-11, OT Position, [T.A], Article V specifies environmental and economic considerations as essential elements of spent fuel storage and handling licensing amendment applications. This chapter provides justification for selecting the option for fuel transfer from IP-3 to IP-2 as the appropriate means to fulfill the directive of the GL 78-11. The fuel transfer process meets the 10 CFR 51.22(c)(9) criteria for categorical exclusion from environmental evaluation. The requested change will have no impact on the environment. The proposed change does not involve a significant hazards consideration. The proposed change does not involve a significant change in the types or significant increase in the amounts of any effluents that may be released offsite. In addition, the proposed change does not involve a significant increase in individual or cumulative occupational radiation exposure.

9.1 Environmental Consideration

The environmental impact of plant operations were assessed in the Indian Point Final Environmental Statements for IP-2 [T.B] and IP-3 [T.C]. Each document was issued prior to the commercial operation of the respective units. This assessment included spent fuel handling and storage.

The proposed amendment would not alter the type or amount of nuclear fuel that can be received, used, and possessed at the sites. Limitations on the type and amount of fuel that can be stored in the IP-2 spent fuel pool and the manner in which it may be stored and handled would also not be changed. Only the IP-3 fuel cooled for at least 5 years in the spent fuel pool after being discharged from the reactor would be permitted for transfer.

It has been determined that the proposed operating license amendment, described in this report, will not:

- result in any impact on the plant's environment, including the water, land, or air;
- consume more than a minute portion of the world's supply of raw material of stainless steel, carbon steel, lead, boron carbide, or aluminum;
- produce any new radioactive waste;
- produce any harmful gaseous, particulate, or liquid emissions;
- require any new and hazardous activities by manufacturing or plant personnel;
- result in significant increase in occupational radiation exposure; or
- result in significant increase in radiation exposure to the public.

Each of the above conclusions is explained below:

9.1.1 Environmental Impacts

The proposed change does not impact the current spent fuel pool or the spent fuel pool cooling and cleanup systems. The current licensed spent fuel pool capacity and supporting analysis for both IP-2 and IP-3 would not be changed. The capacity would be controlled by transferring fuel from the IP-3 SFP to the IP-2 SFP. Fuel will be removed as necessary from the IP-2 SFP and placed into dry fuel storage as has been done in the recent past. The fuel transfer process would not adversely affect the previously evaluated impact on the water, land or air usage at the site.

Conservative estimates of consumption of raw materials for the manufacturing of the Shielded Transfer Canister (STC) are as follows:

Carbon and Stainless Steel:	<25,000 lbs
Lead:	<25,000 lbs
Aluminum:	<2,000 lbs
Boron Carbide:	<1,000 lbs
Stainless Steel Weld Wire and Flux:	<1,000 lbs
Argon Gas (for welding):	< 10,000 SCF

The annual worldwide consumption of each of the above materials is at least 500,000 times as much as the quantities needed for the proposed activity. Therefore, it is concluded that the proposed activity will have a negligible effect on the worldwide availability of the above-mentioned raw materials.

The STC is merely a temporary storage device; that produces no radioactive waste. After decades of use, a slight activation of the metals adjacent to the spent fuel is expected to occur. However, the extent of activation is expected to be small enough to classify the STC as Low Specific Activity (LSA) at its retirement (at the end of the plant's operating life).

There is no known mechanism for the new STC to generate hazardous gases. The postulated creditable human and natural accident events for the transfer process have be evaluated in Chapter 3 and are bounded by the existing accidents conditions documented in the IP-2 and IP-3 FSARs [T.E and T.F]. Both the STC and the HI-TRAC 100D Transfer Cask include bolted closures with elastomeric seals which create redundancy in controlling particulate or liquid release of radioactive materials to the environment.

Manufacture of STC and supporting ancillary equipment and the installation of supporting facility modifications are routine and commonplace activities. Thousands of similar fuel storage canisters, racks, and shipping casks have been manufactured and are in use in the world's nuclear reactors. There is no scientific evidence (or assertion by any group) that the manufacture or use of fuel canister systems entails any human risk factors.

9.1.2 Occupational Radiation Exposure

A 10 CFR Part 50 licensed STC would be used to transfer up to twelve (12) PWR fuel assemblies at a time. The ALARA time, distance, and shielding principles would be used to limit occupational exposure. The fuel is loaded into the STC underwater. The STC would be moved remotely from the spent fuel pool to the HI-TRAC 100D Transfer Cask using the overhead crane. Controls would be in effect to reduce the possible spread of radioactive contamination. The HI-TRAC provides effective shielding and physical protection of the fuel during transfer between the IP-3 and IP-2 Fuel Storage Buildings (FSB). The occupational radiation exposure from the STC and HI-TRAC has been evaluated in Chapter 7 and are considered ALARA pursuant with 10 CFR Part 20.

The occupational radiation exposure for the fuel transfer operation is estimated to be less than 0.52 person-rem(see Table 7.4.22) per transfer of 12 spent fuel assemblies with design basis burnup and cooling times. This small increase in radiation dose would not affect the ability to maintain individual occupational doses within the limits of 10 CFR Part 20 and is as low as is reasonably achievable (ALARA). The site plant radiation protection program is implemented by procedures, specifically the ALARA Program procedure [T.I] that is in compliance with the guidelines of Regulatory Guide 8.8 [D.E] to preclude any significant occupational radiation exposure.

Based on the plant operations, the proposed fuel transfer between IP-3 and IP-2 should add only a small fraction of the total annual occupational radiation dose at the facility. The total twenty-four (24) month occupation dose for 2007 and 2008 at the site was approximately 137 person-rems. The total collective dose for the typical transfer of 192 spent fuel assemblies in one operation cycle would be less than 8.5 person-rem. This is a small percentage of the total average occupational radiation dose for the site and would not result in any significant increase to the occupational radiation doses received by plant workers.

9.1.3 Public Radiation Exposure

The STC is placed in the HI-TRAC 100D Transfer Cask for the transfer between the IP-3 and IP-2 FSBs. The radiation dose rates on the side, top and bottom of the HI-TRAC for the surfaces and at increasing distances are reported in Chapter 7. The impact on the controlled area boundary dose would be negligible considering the low radiation dose rates at the assumed site boundary and the short period of time required for the transfer. The transfer haul path will be inside the plant protected area which is well within the controlled area boundary. The typical time the loaded STC inside the HI-TRAC would be outside of either FSBs (on the haul path) is eight (8) hours. Assuming the transfer of 192 spent fuel assemblies or 16 transfers in one year, the estimated annual radiological dose commitments to a maximally exposed individual at the controlled area boundary (conservatively assumed 160 meters from the HI-TRAC) due to the fuel transfer would be approximately 0.35 mrem (see Table 7.4.16). This estimated total annual dose commitment is within the limitation of the IP-2 and IP-3 Technical Specification [T.G and T.H], which are based on offsite dose requirements of 10 CFR Parts 20, 50, and 40 CFR 190.

9.2 Economic Considerations

In the year 2000 after evaluating alternatives for spent fuel storage, Entergy concluded that implementing an Independent Spent Fuel Storage Installation (ISFSI) pursuant to 10 CFR Part 72 using a general license was the best option to ensure continued reliable operation of IP-2. The Holtec HI-STORM 100 Cask System was selected and implemented for IP-2 in the year 2007.

The capacity of the IP-3 SFP is now reaching its limits. The IP-3 reactor holds 193 fuel assemblies. The plant operates on a twenty-four (24) month operating cycle. At the end of each cycle approximately 90 to 96 fuel assemblies are replaced with fresh fuel during the refueling outage. The IP-3 spent fuel pool has a storage capacity of 1,345 fuel assemblies. After the core reload from the 3R15 (spring 2009) refueling outage, the IP-3 spent fuel pool only has 103 available cells for future storage; thus full core offload capability has been lost. To provide full core off load capability for the next refueling outage 3R16 (Spring 2011) approximately 96 fuel assembles must be removed from the spent fuel pool prior to the outage. Going forward, to maintain full core off load capability for every refueling outage, approximately 96 fuel assemblies must be removed from the spent fuel pool each operating cycle prior to the refueling outage.

Entergy has evaluated alternatives for storing the excess IP-3 fuel. The following subsections describe the economic considerations of certain alternatives for spent fuel storage and are evaluated in two sections; first, the spent fuel storage options available and second, the implementation of dry fuel storage options for IP-3.

9.2.1 Spent Fuel Storage Options Evaluated

9.2.1.1 High Density Spent Fuel Pool Racks

The original low density racks in the IP-3 spent fuel pool have been replaced with high density racks supplied by Holtec International. Additional expansion to increase storage capacity is limited due to available space.

The only open space in the spent fuel pool is set aside for the cask handling area. A temporary rack with a capacity of approximately 64 cells could be installed in the cask handling area of the spent fuel pool. However, there are interferences arising from fuel handling tools which would need to be relocated. The rack would eventually have to be removed to allow for cask handling for other dry fuel storage options. Full core off load capability would not be restored due to the limited capacity of the temporary rack. Another option would need to be identified prior to the 2013 refueling outage.

9.2.1.2 Fuel Rod Consolidation

Spent fuel rod consolidation represents another potential option for expanding the spent fuel storage capacity. Spent fuel consolidation is the process by which spent fuel assemblies are disassembled in the spent fuel pool, and the fuel rods and other components of the fuel bundle are then repackaged into appropriate containers for storage in the pool. The fuel rods are

removed individually, or in groups, from fuel bundles, depending on the equipment used, and are placed in a closely packed array into a fuel rod container with dimensions similar to that of a fuel bundle. These containers should fit in the existing fuel storage racks. It has been shown through several demonstration projects with PWR fuel that a compaction ratio of fuel rods of 2:1 is achievable.

At this time, proven technology to consolidate fuel does exist. The time involved in performing all of the initial functional tests, cold demonstrations, and hot demonstrations to achieve a reliable, workable system would exceed the time that Indian Point has available prior to needing additional storage capacity. The project costs exceed the costs for dry cask storage solutions including the fuel transfer. Therefore, this option is not viable for expanding the spent fuel storage capacity.

9.2.1.3 New Spent Fuel Pool Storage Building

Extension of the storage pool would entail extensive modifications. The FSB currently could not support a larger pool, so an addition to the building or a new building would be required. A new safety related cooling system would have to be installed. These two challenges make the option of extending the storage pool cost and time prohibitive.

9.2.1.4 Dry Cask Storage

Dry Cask Storage is a method of spent fuel storage that removes the spent fuel from the pool and stores it in metal canisters within a concrete overpack. This method permanently removes the fuel from the pool enabling continued operation without modifications to the pool or its associated systems. The casks are stored on a concrete storage pad which is specifically designed for the casks, also known as the ISFSI. The casks can store 24 to 32 PWR assemblies each depending on the vendor. This is a modular storage option so the casks can be purchased as needed.

Entergy facilities, FitzPatrick, Arkansas Nuclear One, River Bend Station, Grand Gulf and Indian Point Energy Center have conducted several studies between 1990 and 2008 on the spent fuel storage issue. These studies explored options similar to those presented above and addressed additional options such as transshipment and construction of new storage pools. In each case, dry fuel storage was selected as the best strategic option.

9.2.2 Options to Implement Dry Cask Storage at IP-3

Entergy chose the Holtec HI-STORM 100 Cask System as the dry cask storage (DCS) technology for use at the ISFSI. The HI-STORM 100 Cask System, like all contemporaneous DCS technologies, accommodates many more fuel assemblies than the 40-ton shipping cask assumed in original plant design and licensing. The 32-assembly multi-purpose canister (MPC) was chosen as the best, most cost-effective option for use at both units. Entergy understood at that time that the cask handling cranes in Units 2 and 3 were of insufficient capacity to support DCS operations and a crane upgrade would need to be addressed as part of the DCS projects for each plant.

The HI-STORM DCS operations involve the handling of heavy loads inside the power plants in the same areas designated for the shipping cask to facilitate movement of spent fuel from the spent fuel pools to the ISFSI. The DCS canister and transfer cask assemblage weighs about 100 tons when loaded and must be moved within the FSB as follows:

- From a staging area into the spent fuel pool for fuel loading
- From the spent fuel pool to the truck bay floor for canister closure operations after fuel loading
- From the truck bay floor closure area to the truck bay floor where the transfer cask is stacked atop the storage overpack and the canister inside is transferred to the storage overpack
- The transfer cask is removed from atop the overpack at the stack-up location and moved back to the other end of the truck bay floor.
- The loaded overpack is moved to the ISFSI using a suitably designed vertical cask transporter.

9.2.2.1 Crane Solutions

Neither the IP-2 nor the IP-3 FSB structure could withstand the significant increase in loads that would result from increasing the capacity of the existing overhead bridge-and-trolley cask handling cranes from 40 tons to 100 tons. The under-capacity of the IP-2 and IP-3 cask handling cranes was addressed in different ways because the two plants are not identical with respect to the immediate site topography adjacent to the FSBs.

At IP-2, a floor-mounted gantry crane was designed, fabricated, licensed, and installed to facilitate the handling of the approximate 100-ton lifted load comprised of the transfer cask and the MPC, which is filled with 32 fuel assemblies and spent fuel pool water. At IP-3, a similar crane upgrade was determined not to be feasible for the following primary reasons:

- The distance between the top of the spent fuel pool pit wall and the truck bay is approximately 23 feet more at IP-3 than at IP-2. This increased distance significantly increases the amplification of seismic loads on the crane. Due to the limited space in the truck bay area, the significant required increase in crane structural member sizes may not be achievable. This makes the feasibility and cost of the upgrade, even if physically possible, imbalanced with the desired outcome.

- There are numerous plant equipment interferences that would require significant design and construction effort to re-locate.

With the constraint of the 40-ton FSB crane, the implementation of dry cask storage is limited to performing a fuel transfer from IP-3 to IP-2, then conducting dry cask storage from IP-2 or designing a light weight dry cask storage system. These options are evaluated in the next three subsections.

9.2.2.2 Dry Fuel Transfer with a licensed 10CFR71 Shipping Cask

With consideration for the 40-ton lifting capacity of the Unit 3 FSB crane, the choices for a licensed 10 CFR Part 71 shipping cask are limited. This limitation would restrict the size of the cask to one that typically holds only one (1) PWR fuel assembly. One such approved Part 71 shipping cask is the NAC-LWT, Certificate of Compliance 71-9225, which could be used for the Indian Point inter-unit fuel transfer. The LWT cask has initial uranium enrichment limitations on the approved contents that do not support the total population of the IP-3 spent fuel inventory. Using the LWT cask would require twelve (12) times the personnel and time resources resulting in approximately five (5) times the total occupation radiation exposure to complete each fuel transfer campaign. If multiple LWT casks are used, the overall transfer time could be reduced by forty percent, but the resources needed would increase and the occupational radiation exposure would be similar. Based on the duration and increased occupation radiation exposure this option is considered not practical or cost effective as a long time solution. Also using a Part 71 cask does not support the schedule for the first fuel transfer campaign prior to the 3R16 (Spring 2011) refueling outage.

9.2.2.3 Fuel Storage with a licensed 10CFR72 Light Weight Dry Storage System

A light weight dry cask storage system could potentially be designed with a capacity of eight (8) to twelve (12) fuel assemblies. A new 40-ton transfer cask, similar to the HI-TRAC 100D Transfer Cask, would be required. The MPC would be designed similar to the MPC-24, but would have a maximum capacity of twelve (12) fuel assemblies. A special design overpack or insert for the existing HI-STORM overpack would be required. If the same overpack is used, three (3) times the ISFSI Pad storage space would be required for the same amount of spent fuel. If a smaller overpack is designed, the required ISFSI Pad space would be approximately two (2) times that of the current HI-STORM 100 Cask System.

The use of this light weight dry cask storage system would require three (3) times the personnel hours and time resources resulting in approximately three (3) times the total occupation radiation exposure to complete each fuel storage campaign. To design this light weight dry cask storage system would take approximately one year to two years for NRC licensing reviews and rulemaking to add the new system to the 10 CFR 72.214 list of approved spent fuel storage casks.

Based on the increased amount of MPCs per each dry storage campaign, and resulting occupational radiation exposure and storage space required the option of a light weight dry cask storage system is considered not cost effective. Also the Part 72 licensing effort does not support the schedule for the first fuel transfer campaign prior to the 3R16 (Spring 2011) refueling outage.

9.2.2.4 Wet Fuel Transfer with a licensed 10CFR50 Shielded Transfer Canister

This option is described in Chapter 1 and uses a STC for transferring up to twelve (12) fuel assemblies between the IP-3 and IP-2 SFPs using the existing HI-TRAC 100D Transfer Cask and vertical cask transporter for the transfer operation. The design and license acceptance criteria are documented in Chapter 3 and present this option as a 10 CFR Part 50 license amendment. The

STC capacity of twelve (12) fuel assemblies is optimized for occupational radiation exposure and amount of fuel assemblies transferred each evolution. Essentially this is a mobile spent fuel pool that provides equivalent or better protection of the spent fuel than in the existing spent fuel pool. The technical analyses supporting the license amendment are very similar to that of a spent fuel rack expansion license amendment. Credit for previously reviewed and approved HI-TRAC 100D Transfer Cask analysis, under 10CFR72, is being used when applicable to support the on-site transfer operations. Based on reasonable occupational radiation exposure, cost effective movement of fuel, and subsequent placement into dry cask storage using a proven technology this option is considered to be the best strategic solution for the IP-3 spent fuel storage issue.

CHAPTER 10: OPERATING PROCEDURES

10.0 Introduction

This chapter outlines the loading, unloading, and recovery procedures for the Shielded Transfer Canister (STC) in support of fuel transfer operations. The procedures provided in this chapter are prescriptive to the extent that they provide the basis and general guidance for preparing detailed, written, site-specific, loading, handling, and unloading procedures. Section 10.1 provides the guidance for the preparation and initial setup of the STC and supporting equipment. Section 10.2 provides the guidance for STC fuel loading. Section 10.3 provides the guidance for STC on-site transfer. Section 10.4 provides the guidance for STC fuel unload. Section 10.5 provides guidance for performing maintenance and responding to off-normal events. Equipment specific operating details such as valve manipulation and Transporter operation are not within the scope of this report and will be prepared based on the specific equipment selected by the users and the configuration of the site.

The steps contained herein describe acceptable methods for performing STC loading, unloading, and transfer operations. These procedures may be altered to allow alternate methods and operations to be performed in parallel or out of sequence as long as the general intent of the guidance is met. Users may select alternate configurations, equipment and methodology may be selected to accommodate their specific needs provided that the intent of this guidance is met. The steps provided in this chapter, equipment-specific operating instructions, and plant working procedures will be utilitized to develop the site specific written, loading and unloading procedures.

Technical and Safety Basis for Loading and Unloading Procedures

The procedures herein are developed for the loading, unloading, and transfer of spent fuel in the STC. The activities involved in loading of spent fuel in the STC, if not carefully performed, may present risks. The design of the STC, including these steps, the ancillary equipment and the plant Technical Specifications, serve to minimize risks and mitigate consequences of potential events. To summarize, consideration is given in the loading, unloading and transfer systems and procedures to the potential events listed in Table 10.0.1. The primary objective is to reduce the risk of occurrence and/or to mitigate the consequences of the event. The steps contain Notes, Warnings, and Cautions to notify the operators to upcoming situations and provide additional information as needed. The Notes, Warnings and Cautions are purposely bolded and boxed and immediately precede the applicable steps. In the event of an extreme abnormal condition (e.g., cask drop) the user shall have appropriate procedural guidance to respond to the situation. As a minimum, the procedures shall address establishment of emergency action levels; implementation of emergency action program; establishment of a restricted area boundary for

personnel ; monitoring of radiological conditions; actions to mitigate or prevent the release of radioactive materials; and recovery and planning, execution, and reporting to the appropriate regulatory agencies, as required.

Table 10.0.1

OPERATIONAL CONSIDERATIONS

POTENTIAL EVENTS	METHODS USED TO ADDRESS EVENT
Cask Drop During Handling Operations	Cask lifting and handling equipment is designed to ANSI N14.6 and NUREG-0612. Procedural guidance is given for cask handling, inspection of lifting equipment, and proper engagement to the trunnions.
Cask Tip-Over during loading and unloading	The STC and the HI-TRAC while supported on horizontal surfaces has been demonstrated by analysis to be stable and not tip-over from postulated events.
Contamination spread from cask process exhausts	Processing systems are equipped with exhausts that can be directed to the plant's processing systems or depressurization underwater.
Damage to fuel assembly cladding from oxidation	Fuel assemblies always remain covered with water and are never subjected to air or oxygen during normal loading and unloading operations.
Ignition of combustible mixtures of gas (e.g., hydrogen) during STC handling	Ignition sources are not used for STC processing and gases can be controlled by ventilation.
Excess dose from failed fuel assemblies	STC gas sampling allows operators to determine the integrity of the fuel cladding; this allows preparation and planning for failed fuel in the event of an accident during transfer operations. Failed fuel assemblies (i.e. assemblies that are not intact) and/or damaged fuel are not permitted for transfer in the STC.
Excess dose to operators	The procedures provide ALARA Notes and Warnings when radiological conditions may change.
Excess generation of radioactive waste	The STC / HI-TRAC system uses process systems that minimize the amount of radioactive waste generated. Such features include smooth surfaces for ease of decontamination efforts, prevention of avoidable contamination, and procedural guidance to reduce decontamination requirements.

POTENTIAL EVENTS	METHODS USED TO ADDRESS EVENT
Fuel assembly misloading event	Criticality: Procedural guidance is given to perform assembly selection verification prior to loading. A cell blocker device is used when transferring fuel assemblies that do not meet the minimum burnup requirements. Thermal: Procedural guidance is given to perform assembly selection verification and a post-loading visual verification of assembly identification prior to installation of the STC lid. A pressure monitoring system is used to detect any fuel misloading before the transfer operations between units.
Load Drop	Rigging and procedural guidance are provided for all lifts of heavy loads and meet the NUREG 0612, Section 5.1.6 requirements. The vertical cask drop during lifting with the VCT has been evaluated. The VCT has redundant drop protection during cask transport.
STC carrying hot particles out of the SFP	Procedural guidance is given to radiologically survey the STC prior to removal from the SFP followed by wash down of the STC when removing from the SFP
Crane Hang-up or Loss of Power	The building cranes include features to allow suspended loads to be manually lowered in the event of a crane hang-up or loss of power. Appropriate radiological controls will be established if crane operation is lost while the STC is outside of the HI-TRAC or Spent Fuel Pool. The STC will be lowered back into either the HI-TRAC or Spent Fuel Pool in the event that electric power or crane control cannot be restored.
Air Intrusion into STC	The piping and fittings used to process the STC are designed to prevent air intrusion during STC processing. Specifically, the piping used to connect to the STC for water circulation and steam injection is pressure tested to demonstrate that it is free of leaks, and connections used on the STC are self-sealing, valved, quick connect fittings which prevent air intrusion while disconnected. In addition, air in-leakage during the pressure rise test will result in an observed increase in the pressure rise and would result in a failure of the pressure rise test. Port cover plates are installed immediately after the process lines are disconnected and leak tested to demonstrate that they have been installed properly and will prevent any air infiltration.

10.1 STC Preparation and Setup

10.1.1 STC Inspections and Checkout

1. Perform general visual inspection of basket and canister for damage, degradation or foreign material that would prevent the fuel assembly from seating. Repair coatings as required per manufacturer's instructions.

2. Inspect seals and sealing surfaces to ensure that the surface will effect the required seal and replace/repair as required per Holtec Operation and Maintenance manual.

3. Maintenance requirements for the seal are documented in Chapter 8, Section 8.5.

4. Inspect and lubricate bolting, replace as required per Table 8.5.1.

5. Ensure trunnions and special lifting devices have been inspected or load tested in accordance with ANSI N14.6. Visually inspect trunnions and apply approved lubrication to the trunnion threads prior to installing them in the STC flange, if removed.

6. Ensure that Metamic surveillance coupons are properly positioned in the STC canister.

7. Ensure that the STC confinement boundary seals have been subjected to the periodic leakage testing in accordance with Section 8.5.2 within the 12 months preceding the expected fuel transfer. If the 12 month period may be exceeded prior to fuel transfer, perform the periodic leakage testing of the STC seals in accordance with Section 8.5.2.

10.1.2 HI-TRAC Inspections and Checkout

1. General maintenance requirements for the HI-TRAC are documented in HI-STORM 100 FSAR, Chapter 9[K.A]. The HI-TRAC seals and sealing surface maintenance requirements are documented in Chapter 8, Section 8.5 of this report.

2. Perform general visual inspection of HI-TRAC and Solid Top Lid for damage or degradation. Repair coatings as required per manufacturer's instructions.

3. Inspect seals and sealing surfaces to ensure that the surface will effect the require seal and replace/repair as required.

4. Inspect and lubricate bolting, replace as required per Table 8.5.1.

5. Ensure that trunnions have been inspected or load tested in accordance with ANSI N14.6 and station procedures for special lifting devices. Visually inspect trunnions and apply approved lubrication.

6. Inspect HI-TRAC internal cavity for presence of foreign material and remove as required.

Note:
To minimize the impact loads which would occur during a non-mechanistic tip-over of the HI-TRAC containing a loaded STC, the STC must be positioned such that the STC trunnions are offset from the HI-TRAC trunnions in the angular direction by at least 30 degrees. The STC trunnions shall not be coplanar with the HI-TRAC trunnions. In addition, the STC must be oriented such that the STC Lift Lock can be engaged to the building crane.

7. Install the HI-TRAC/STC Centering Assembly in the HI-TRAC such that when loaded the STC trunnions will be offset from the HI-TRAC trunnions by at least 30 degrees.

8. If necessary, remove the HI-TRAC Pool Lid drain connection hardware. Install a threaded pipe plug with approved seal compound in the HI-TRAC Pool Lid drain.

9. Perform a leak test on the HI-TRAC pool lid seal and drain plug as described in Section 8.5.2.

10. Place the HI-TRAC inside the Bottom Missile Shield (BMS) and install the BMS on the HI-TRAC such that bottom of the BMS hangs at or below the bottom of the HI-TRAC Pool Lid. The BMS is installed on the HI-TRAC prior to placement of the HI-TRAC into Unit 3 and remains in place at all times when the HI-TRAC is being used to transfer an STC loaded with fuel.

Note:
Inspection and installation of empty STC in the HI-TRAC may occur at any location or be performed at any time prior to use as long as the following steps are performed.

10.1.3 Preparation and Setup for Use

1. Place STC and HI-TRAC in the preparation area. Perform appropriate inspection as listed in section 10.1.1 and 10.1.2 above.

2. Ensure that the instrumentation defined in Table 10.1.1 has current calibration and is available for use.

3. If necessary, remove the HI-TRAC Top Lid by removing the top lid bolts and using the lift sling that meets the requirements of NUREG 0612, Section 5.1.6. Store Top Lid and bolts in a site-approved location.

ALARA Warning:
Replacement of the Pool Lid may only be performed when the HI-TRAC is empty.

4. If necessary, install the HI-TRAC Pool Lid with seal and tighten bolting to achieve the pre-stress specified in Section 6.2.3.4.

5. If necessary, fill the HI-TRAC water jacket with water.

6. Ensure that the HI-TRAC/STC Centering Assembly has been installed in the HI-TRAC in the correct orientation.

7. Attach the Lift Lock or Lift Cleats to the STC Lid as needed. Attach the STC Lifting Device to the STC Lid and engage the Lifting Device to the STC trunnions.

8. Remove the nuts from the STC Lid bolting and install a minimum of two lid alignment pins in place of lid studs in the STC top flange.

9. Using an overhead crane, engage the crane hook with the Lift Lock or Lift Cleats.

10. Place the empty STC inside the HI-TRAC.

11. Fill the annulus between the STC and HI-TRAC with demineralized water to an elevation of just below the top of the STC flange.

12. Check for water leakage at the HI-TRAC Pool Lid seal and the plugged drain connection. Replace seal or clean sealing surfaces as required.

13. Disengage the STC Lifting Device arms from the STC trunnions and, using the overhead crane, lift and remove the STC Lid.

14. Using a suitable pumping system, fill the STC with SFP water to an elevation of approximately 3 inches from the top of the STC.

15. Ensure that the STC seals are seated properly in the STC lid seal grooves.

16. Ensure that the STC Lid sealing surface on the top flange is clean and free of debris.

17. Open the STC Lifting Device arms and install the STC Lid aligned to allow the STC Lifting Device arms to engage the STC trunnions.

18. Ensure the STC Lifting Device arms are engaged with the STC trunnions.

19. Slowly lift the STC Lid without lifting the STC, and verify engagement of the STC Lifting Device arms with the STC trunnions.

Table 10.1.1

STC INSTRUMENTATION SUMMARY FOR LOADING AND UNLOADING OPERATIONS

Instrument	Function
Contamination Survey Instruments	Monitors fixed and non-fixed contamination levels.
Dose Rate Monitors / Survey Equipment	Monitors dose rate and contamination levels and ensures proper function of shielding. Ensures assembly debris is not inadvertently removed from the spent fuel pool during STC removal. Provides additional assurance that canister contents meet the design limits.
Pressure Gauges	Monitors STC and HI-TRAC pressure during operations and leak testing.
Pressure Rise Gauges	Monitors STC pressure rise during fuel misload evaluation testing. Pressure gauges used to detect fuel misloads shall have an operating range of at least 0.1 to 15 psia and shall have an accuracy of better than 1% of full scale.
Temperature Indicating Device	Monitors water temperature during operations.
Torque Wrench	Ensures proper bolting pre-stress for the STC and HI-TRAC lid bolting.
Pressure Relief Device	ASME code compliant relief valve or rupture disc that prevents over-pressuring the STC during loading and unloading operations including the pressure rise test. Pressure relief device set pressure shall be less than or equal to the STC design pressure.

10.2 STC Fuel Loading

10.2.1 Placement of STC in the SFP

1. Ensure that the SFP water temperature is ≤ 100 °F and the SFP cooling system is in operation.

2. Ensure that the SFP boron concentration is sufficiently above 2,000 ppm to allow for dilution from addition of demineralized water for wetting down of STC.

3. Engage the Lift Lock with the crane hook by engaging the connection pin through the hook center hole.

4. Slowly lift the STC from the HI-TRAC one or two inches.

5. Ensure that the STC Lifting Device arms are engaged with the STC trunnions.

6. Using the overhead crane, lift the empty STC and position over the SFP cask loading area.

ALARA Note:
Wetting the surfaces of equipment to be submerged in the SFP reduces the efforts required to decontaminate the equipment when it is later removed from the SFP. Users are responsible for any water dilution considerations.

7. Wet down the STC and handling equipment with demineralized water.

8. Lower the STC into the SFP cask handling area.

9. Continue lowering the STC to the SFP floor. Ensure the outer shell of the STC is a minimum of 8 inches from existing fuel racks.

10. Ensure that the STC load is supported by the SFP floor and is not supported by the crane hook.

11. Disengage the STC Lifting Device arms from the STC trunnions. Using an underwater viewing device, verify that the STC Lifting Device arms have been disengaged from the trunnions.

ALARA Note:
Activated debris may have settled on the STC lid while in the SFP. The top surface should be kept under water until a preliminary dose rate survey clears the STC for removal. Users are responsible for any water dilution considerations while the lid and lifting equipment are washed down during removal from the SFP. Personnel should be aware that streaming may occur through the STC lid where the vent and drain ports are located.

12. Using the overhead crane, slowly raise the STC Lid to the SFP surface.

13. Perform a radiological survey of the top the STC lid to check for hot particles and remove as required.

14. Remove the STC lid from the SFP while washing down the STC Lid and lifting equipment with demineralized water for contamination control. Store Lid and lifting equipment in a designated location.

10.2.2 Fuel Handling and Loading into STC

Notes:
Fuel assembly misloadings are defined as: • Loading any fuel assembly under Configuration 1 which does not meet the minimum burnup requirements; or • Loading any fuel assembly in the 4 center cells under Configuration 2. • Loading a recently discharged fuel assembly. The operational controls are based on the following: • Use of cell blocking device. • Pressure monitoring of the STC. • Independent verification of fuel assemblies and inserts loaded into the STC

1. For each fuel transfer, the following steps will be performed.

   a. The fuel assemblies and any non-fuel hardware intended for transfer will be characterized to ensure compliance with Appendix C of the TS. This characterization will be performed in accordance with approved Reactor Engineering procedures.

   b. Fuel move sheets will be developed using the results of the fuel characterization process. The fuel move sheets will be independently checked by a qualified

Reactor Engineer as required by Reactor Engineering procedures and become the approved load plan.

c. Prior to removal of a fuel assembly from its SFP storage rack location, fuel handling personnel will verify and peer check that the fuel assembly physical ID number correctly corresponds to the fuel assembly ID number specified in the approved load plan.

d. Peer checking will be performed by fuel handling personnel after placement in the STC to ensure the cell location is as designated in the approved load plan.

2. For loading in Configuration 1:

a. Place a small cell blocker device (See Figure 10.2) on top of the center of the basket that prevents assemblies being loaded in the four center cells of the STC basket.

b. Load fuel in the eight outer cell locations in accordance with fuel move sheets.

c. Independently verify by visual inspection that none of the loaded assemblies in the STC are a fresh fuel assembly.

d. Remove the cell blocker device

e. For each of the four locations in the center of the basket:

(1) Load the fuel assembly in accordance with fuel move sheets.

(2) Independently verify by visual inspection that none of the loaded assemblies in these STC cells are a fresh fuel assembly.

3. For loading in Configuration 2:

a. Place a small cell blocker device (See Figure 10.2) on top of the center of the basket that prevents assemblies being loaded in the four center cells of the STC basket.

b. Load fuel in the eight outer cell locations in accordance with fuel move procedures.

c. Remove the cell blocker device.

4. Perform a primary post loading visual inspection of the fuel assemblies to verify that the serial numbers of the fuel assemblies and inserts match the approved loading pattern. The primary verifier shall perform the visual inspection in the Fuel Storage Building.

5. Perform a secondary post loading visual inspection of the fuel assemblies to verify that the serial numbers of the fuel assemblies and inserts match the approved loading pattern. The secondary verifier shall either verify the loading pattern in the Fuel Storage Building (both verifications may be done simultaneously) or verify the loading pattern via review of a DVD, videotape, or other electronic media.

10.2.3 Removal of STC from SFP and placement in HI-TRAC

1. Ensure that the SFP boron concentration is sufficiently above 2,000 ppm to allow addition of demineralized water for wetting down of STC.

2. Ensure that the Lift Lock and STC Lifting Device are installed on the STC Lid.

3. Connect the overhead crane hook to the Lift Lock by engaging the connection pin through the hook center hole.

4. Install vent connections to the STC vent and/or drain port quick connects to ensure an open vent path from the STC internals. The vent connection may be routed to the SFP or other plant rad waste collection system.

5. Visually inspect the STC Lid drain line to verify that it is free of blockage that may obstruct flow.

6. Move the STC Lid over the SFP and align with the STC.

7. Wet down the STC Lid and lifting equipment with demineralized water.

8. Ensure that the STC Lifting Device arms are opened.

Note:
An underwater viewing device may be used for monitoring underwater operations.

9. Using an underwater viewing device, ensure that the STC seal is in place and the sealing surface is free of debris.

10. Lower the STC Lid onto the STC flange using the alignment pins to guide the lid into the proper location. Care should be taken to assure the lid is properly located over the alignment pins prior to lowering onto flange.

11. Engage the STC Lifting Device arms with the STC trunnions.

12. Using an underwater viewing device, visually verify that the STC Lid is properly seated. If not, disengage the STC Lifting Device arms from the trunnions, reinstall the STC Lid and repeat as necessary.

13. Lift the STC Lid to apply a slight tension to the STC trunnions and using an underwater viewing device, visually verify that the STC Lifting Device arms are properly engaged to the STC trunnions. If not, lower the STC, reinstall the Lid and repeat as necessary.

ALARA Note:
Activated debris may have settled on the STC during fuel loading. The top surface should be kept under water until a preliminary dose rate survey clears the STC for removal. Users are responsible for any water dilution considerations while the STC and lifting equipment are washed down during removal from the SFP. Personnel should be aware that streaming may occur through the STC lid where the vent and drain ports are located.

14. Slowly raise the STC to just below the SFP surface.

15. Perform a radiological survey of the top area of the STC to check for hot particles and remove as required.

16. Raise the STC to allow access to the lid.

17. Wash down the STC and lifting equipment with demineralized water for contamination control.

18. Perform a radiological survey of the STC lid and compare to the expected dose rates as referenced in Technical Specification Appendix C, Part II, Subsection 5.4, to ensure there has not been a fuel mis-load. Dose rate measurements shall be taken at the locations described in the Technical Specification.

19. If dose rates exceed expectations, perform the following:

    a. Lower STC back into the pool

    b. Administratively verify that the correct contents were loaded in the correct fuel cell locations.

    c. Perform a written evaluation to determine (1) why the surface dose rate limits were exceeded, and (2) if the higher dose rate values are acceptable, fuel transfer can continue in accordance with controls expressed in Technical Specification Appendix C, Part II, Subsection 5.4.

    d. If the higher dose rate values are not acceptable, a reload of the STC will be performed.

20. Remove a small amount of water from the STC to avoid spilling water during handling.

21. Using the remote crane controls and maximizing personnel distance to the STC, continue raising the STC while washing it down with demineralized water.

Note:
To minimize the impact loads which would occur during a non-mechanistic tip-over of the HI-TRAC containing a loaded STC, the STC must be positioned such that the STC trunnions are offset from the HI-TRAC trunnions in the angular direction by at least 30 degrees. The STC trunnions shall not be coplanar with the HI-TRAC trunnions
ALARA Note:
To minimize the dose to operations personnel, remote cameras and/or alignment tools should be used with the overhead crane to minimize the need for personnel to be close to the STC while it is loaded with fuel and not shielded by the HI-TRAC or spent fuel pool.

22. Using the remote crane controls and maximizing personnel distance to the STC, place the STC into the HI-TRAC.

23. Perform surface dose rate measurements for the HI-TRAC and compare to the expected dose rates as referenced in Technical Specification Appendix C, Part II, Subsection 5.4. Dose rate measurements shall be taken at the locations described in the Technical Specification. Compare the measured dose rates with calculated dose rates for the design basis fuel to ensure they are less than expected.

24. If dose rates exceed expectations, perform the following:

    a. Administratively verify that the correct contents were loaded in the correct fuel cell locations.

    b. Perform a written evaluation to determine (1) why the surface dose rate limits were exceeded, and (2) if the higher dose rate values are acceptable, fuel transfer can continue in accordance with controls expressed in Technical Specification Appendix C, Part II, Subsection 5.4

    c. If the higher dose rate values are not acceptable, the STC will be returned to the spent fuel pool and a reload of the STC will be performed.

25. Install a lead cover over the annular region to reduce dose exposure as directed by radiation protection.

26. Disconnect the the Lift Lock from the STC Lid. Remove the Lift Lock from the STC Lid and store in a designated area.

27. Remove the lid alignment pins from the STC flange and install the STC lid studs and nuts. Tighten all lid nuts hand tight.

Note:
The pressure relief device is installed on the STC instrument trees to provide overpressure protection for the STC prior to establishing the proper water level for transfer and during the misload pressure rise test. The pressure relief device requirements are described in Table 10.1.1.

28. Connect the instrument trees containing calibrated pressure indicators, pressure relief device and isolation valves to the vent and drain side connections to the STC lid. (See Figure 10.1). Ensure that the isolation valves are open to prevent pressure build-up in the STC. Ensure the pressure gauge isolation valves are open to the coarse gauges and the pressure gauge isolation valves are closed to the pressure rise test gauges.

29. Torque the STC Lid bolting to the specified pre-stress as defined in Section 6.2.1.1.

30. Fill, as necessary, the STC/HI-TRAC annulus space with demineralized water to within 1" of the top of the STC lid.

31. Leak test the STC lid seal as described in Section 8.5.2 to verify that the STC is assembled correctly for transfer.

32. Connect a source of borated water, minimum 2,000 ppm boron, to the STC drain side connection and connect the STC vent side connection to the spent fuel pool or a suitable liquid rad waste system.

ALARA Warning:
Water flowing from the STC may carry activated particles and fuel particles. Apply appropriate ALARA practices around the drain line.

33. Ensure that the appropriate vent and drain side isolation valves are open and fill the STC with borated water until only liquid water is discharging from the vent side connection.

34. Close the drain side isolation valve.

35. Isolate the borated water source from the STC drain side connection and ensure the STC drain side connection is connected to the spent fuel pool or a suitable liquid rad waste system. The discharge line shall include a water totalizer and/or collection tank that can be used to measure the amount of water removed from the STC.

36. Open the drain side isolation valve to the spent fuel pool or Rad Waste collection system.

37. Ensure that a low pressure steam source is connected to the appropriate vent side connection.

38. Ensure that the appropriate vent and drain side isolation valves are open and inject low pressure steam (<30 psig) into the STC through the vent connection until steam is observed discharging from the STC drain side connection.

Note:
Removal of excess water is not feasible. However, an additional defense in depth verification of the amount of water removed is performed.

39. Verify that the amount of water removed from the STC during the blowdown with steam is equivalent to the amount of water expected to meet the vapor space requirements of 9.0 +0.5/- 1.5 inches.

40. Close the vent and drain side isolation valves and immediately open the pressure rise gauge isolation valves to begin monitoring the STC pressure. The pressure should be recorded at an interval of approximately once every hour in accordance with the surveillance in the TS. Pressure readings should be observed remotely or from low dose area in accordance with ALARA practices.

41. Monitor the rate of pressure rise in the STC for 24 hours to verify that the rate of pressure rise remains at or below the limit for the design basis heat load per the surveillance in the TS. If the rate of pressure rise exceeds the pressure rise limit for the design basis heat load at any time within 24 hours, perform the following steps in accordance with the TS:

    a. Connect the vent side isolation valve to the SFP and open the vent side isolation valve to vent excess pressure.

    b. Connect a water supply from the SFP, minimum 2,000 ppm boron, to the STC drain connection and circulate water through the STC until the STC water exit temperature is below 180 F. The STC flow tube helps to ensure water circulation through the canister cavity.

    c. Begin actions to determine the reason(s) for exceeding the pressure rise limit.

    d. If necessary based on the results of (c), return the STC to the SFP and unload the fuel.

42. If the pressure remains below the pressure rise limit for the design basis heat load, remove the instrument trees from the STC to continue with the fuel transfer.

43. Ensure that the O-ring seals are installed on the vent and drain port cover plates and that the cover plate sealing surfaces are free of debris and damage to the sealing surfaces.

44. Install the bolted cover plates on the vent and drain ports and torque the bolts wrench tight.

45. Perform a pre-transfer leakage test of the vent and drain port cover plates as described in Section 8.5.2.

46. Verify that the pre-transfer leakage test for the STC lid and port cover plate seals have confirmed that the STC has been properly assembled for fuel transfer. .

47. Remove the lead cover over the annular region inside the HI-TRAC.

48. Ensure that the HI-TRAC seal is in place and the sealing surfaces are free of debris.

49. Place the Solid Top Lid on the HI-TRAC and install the lid bolting.

50. Torque the lid bolting to achieve the pre-stress specified in Section 6.2.1.2.

51. Pressurize the HI-TRAC with air or nitrogen to a pressure equivalent to 125% of the design pressure defined in Table 3.2.1, +5/-0 psig, and hold for 10 minutes.

52. While maintaining the test pressure in the HI-TRAC, perform a leak test of the HI-TRAC Solid Top Lid seal as described in Section 8.5.2.

53. While maintaining the test pressure in the HI-TRAC, perform a leak check of the HI-TRAC Pool Lid gasket and Drain plug. The acceptance criterion is no observed water leakage.

54. Depressurize the HI-TRAC and remove the pressure test equipment.

55. Install the port cover on the HI-TRAC access port.

56. Perform a leakage test as described in Section 8.5.2 to verify that the port cover meets the leakage criteria.

10.3 HI-TRAC / STC Movement

Note:
The haul path conditions must satisfy the requirements documented in the engineering change package for roadway evaluations and upgrades. The haul path will be evaluated and upgraded

to meet the static and dynamic load condition for use of the VCT movement of the HI-TRAC with the STC loaded with fuel assemblies.

10.3.1 Haul Path Inspection and Controls

1. Perform an inspection of the haul path to ensure that the conditions for fuel transfer are met.

2. Verify that transitory combustibles and hazards are not within the haul path restricted area boundary.

3. Ensure administrative controls have been initiated to control transitory combustibles and hazards.

4. Ensure deliveries and vehicle traffic have been suspended in the haul path restricted area boundary, including any walkways crossing over the haul path.

5. Ensure no maintenance activities that involve the use of ignition sources (welding, burning, or grinding) or involve the use of flammable or combustible liquids are being performed in the haul path area and buildings within the restricted area boundary.

6. Verify the National Weather Service does not predict severe weather during the expected transfer period and does predict that average ambient temperatures will remain within the service temperature range defined in this report.

7. Ensure a hot work qualified fire watch is assigned to the VCT/loaded cask and has an inspected 20 lb. type ABC fire extinguisher.

8. Ensure radiological controls are established in accordance with plant procedures and program requirements. This includes provisions for control of personnel access to any walkways or other areas above the haul path.

9. Ensure plant security controls are established in accordance with the security plan and implementation procedures.

10. Ensure that plant operations / shift manager notifications have been made.

10.3.2 Movement of loaded HI-TRAC on Air Pads/LPT

1. Air Pallets/Pads/Bearings at Unit 3

   a. Ensure transport area is clean and free of debris

   b. Ensure that the Bottom Missile Shield is installed on the HI-TRAC.

   c. Operate the air pads per the manufacturer's instructions.

   d. Use suitable prime mover connected to the HI-TRAC to control the load and move along the designated haul path from the FSB to the VCT lift point.

   e. Secure the air pad system and remove the prime mover.

2. LPT at Unit 2

   a. Ensure haul path and guide plates are clean and free of debris.

   b. Ensure the LPT maintenance and inspection has been performed per the manufacturer's instructions.

   c. Ensure that the Bottom Missile Shield is installed on the HI-TRAC.

   d. Operate the LPT Assembly to transport the loaded HI-TRAC from the VCT lift point to the FSB.

10.3.3 Movement of loaded HI-TRAC with VCT

1. Ensure that VCT maintenance and inspection, in accordance with the manufacturer's instructions, has been performed.

2. Ensure that the VCT lateral supports for the HI-TRAC are installed.

3. Ensure that the HI-TRAC Lift Links have been inspected or load tested per ANSI N14.6 requirements.

4. Ensure that haul path requirements and controls in section 10.3.1 have been established.

   a. Ensure that the Bottom Missile Shield is installed on the HI-TRAC.

5. Align the VCT over the HI-TRAC and engage the Lift Links with the HI-TRAC trunnions.

Note:
The loaded HI-TRAC maximum lift height limit is 6 inches. Appropriate surface support material may be used to lift the HI-TRAC in increments of less than 6 inches. When the VCT redundant drop protection is engaged, the maximum lift height limit does not apply.

6. Without exceeding the 6 inch maximum lift height limit, lift the HI-TRAC off the air pads with the VCT to the transport height and engage the locking pins.

   a. Use a measuring device to ensure HI-TRAC does not exceed the 6 inch lift height limit prior to final pinning.

   b. Install suitable support surface material between the horizontal surface and the HI-TRAC.

   c. Repeat as necessary to lift the HI-TRAC to the required height.

7. Install the VCT cask support strap around the HI-TRAC and engage the hydraulic tensioner.

8. Following the established haul path and controls, move the loaded HI-TRAC from the lift point at IP-3 to the setdown point at IP-2.

9. Remove the VCT cask support strap.

10. Without exceeding the maximum lift height limit, remove the locking pins and lower the loaded HI-TRAC onto the LPT.

11. Disengage the Lift Links from the HI-TRAC trunnions.

12. Move the VCT to the designated storage location.

13. Move the HI-TRAC on the LPT into the FSB.

10.4 STC Fuel Unloading

10.4.1 Placement of loaded STC in IP2 SFP

1. Ensure that the SFP boron concentration is sufficiently above the IP2 TS minimum requirement to allow for dilution from the STC water and addition of demineralized water for wet down of STC.

2. Ensure that the HI-TRAC has been positioned in the FSB where the gantry crane canister hoist can access the STC.

3. Depressurize the HI-TRAC by connecting a suitable hose to the HI-TRAC Solid Top Lid vent, routing it to the SFP or plant approved location, and opening the vent.

ALARA Note:
Personnel should be aware that streaming may occur through the STC lid where the vent and drain ports are located.

4. Remove the HI-TRAC Solid Top Lid bolting, remove the Lid, and store in a designated area.

5. Install a lead cover over the annular region to reduce dose exposure as directed by radiation protection.

Caution:
Oxidation of neutron absorber panels contained in the STC may create hydrogen gas while the STC is filled with water. Additionally, radiolysis of the water may occur in high flux conditions creating additional combustible gases. When venting the STC, potential ignition sources should be eliminated until the vapor space has been cleared or the STC is back in the spent fuel pool. The space below the STC lid may be purged with inert gas to eliminate combustible gases.

6. Connect the instrument trees containing calibrated pressure indicators, pressure relief valves and isolation valves to the vent and drain side connections to the STC lid. (See Figure 10.1). Ensure that the isolation valves are closed.

Caution:
STC pressures above atmospheric pressure indicates that the STC water temperature is superheated relative to atmospheric pressure and venting the STC to atmospheric pressure can cause the water in the STC to flash to steam. The STC internals and internal water must be cooled to below 212°F to ensure uncontrolled boiling does not occur.

7. Monitor the pressure in the STC to verify that the pressure is at or below atmospheric pressure. If the STC pressure is above atmospheric pressure, perform the following steps:

   a. Connect a water supply line from the SFP to the STC drain side isolation valve.

   b. Route the vent side isolation valve to the SFP.

   c. Circulate water through the STC until the temperature of the water exiting the STC is below 180°F. The STC flow tube helps to insure water circulation through the canister cavity.

8. Connect the vent side isolation valve to the plant rad waste system.

9. Open the vent side isolation valve to allow the STC internal pressure to come to equilibrium with the atmospheric pressure.

10. Using a suitable pump, pump water from the STC/HI-TRAC annulus to a suitable rad waste container until the water level is below the top of the STC flange.

11. Loosen the STC Lid bolting and allow the STC Lifting Device arms to engage the STC trunnions.

12. Remove the STC Lid nuts and replace a minimum of two lid studs with alignment pins.

13. Install the Lift Cleats and Lift Cleat Adapter on the STC Lid.

14. Ensure the STC Lifting Device arms are engaged with the STC trunnions.

15. Connect the gantry crane canister hoist to the STC through the Lift Cleat Adapter.

16. Slowly lift the STC from the HI-TRAC one or two inches.

17. Verify that the STC Lifting Device arms have engaged the STC trunnions and ensure the STC Lid bolts are removed.

18. Remove the instrument trees from the STC.

19. Install vent connections to the STC vent and/or drain port quick connects to ensure an open vent path from the STC internals. The vent connection may be routed to the SFP or other plant rad waste collection system.

20. Remove the lead cover over the annular region inside the HI-TRAC.

ALARA Note:
To minimize the dose to operations personnel, remote cameras and/or laser positioning guides and the remote crane controls should be used with the gantry crane to minimize the need for personnel to be close to the STC while it is loaded with fuel and not shielded by the HI-TRAC or spent fuel pool.

21. Using the remote crane controls and maximizing personnel distance to the STC, continue to lift the STC and place over the SFP cask handling area.

ALARA Note:
Wetting the surfaces of equipment to be submerged in the SFP reduces the efforts required to decontaminate the equipment when it is later removed from the SFP. Users are responsible for any water dilution considerations.

22. Wet down the STC and handling equipment with demineralized water.

23. Lower the STC into the SFP and place the STC on the SFP floor in the cask handling area. Ensure STC is a minimum of 8 inches from existing fuel racks.

HOLTEC INTERNATIONAL COPYRIGHTED MATERIAL

24. Ensure no load exists on the crane hook.

25. Disengage the STC Lifting Device arms from the STC trunnions. Using an underwater viewing device, verify the STC Lifting Device arms have been disengaged from the trunnions.

ALARA Note:
Activated debris may have settled on the STC lid while in the SFP. The top surface should be kept under water until a preliminary dose rate survey clears the STC for removal. Users are responsible for any water dilution considerations while the lid and lifting equipment are washed down during removal from the SFP.

26. Slowly raise the crane and STC Lid to the SFP surface.

27. Wash down the STC Lid and lifting equipment with demineralized water for contamination control and store in a designated location.

10.4.2 Unloading of STC

1. Ensure that fuel selection has been performed and is in compliance with the IP2 TS 3.7.15 and the fuel move sheets have been approved in accordance with plant procedures.

2. Using the approved fuel move sheets, move each fuel assembly from the STC and place it in the designated SFP rack cell.

3. Perform independent visual verification of each fuel assembly location.

4. If a fuel assembly cannot be placed in the designated SFP rack cell, return the fuel assembly to its former STC cell location per the fuel move sheets. Contact Reactor Engineering to obtain new fuel move procedure.

10.4.3 Removal of STC from SFP and placement in HI-TRAC

1. Ensure that the SFP boron concentration is sufficiently above the IP2 TS minimum requirement to allow for dilution from addition of demineralized water for wash down of STC.

2. Verify no fuel assemblies are present in the STC.

3. Ensure that the Lift Cleats, Lift Cleat Adapter, and STC Lifting Device are installed on the STC Lid.

4. Connect the gantry crane canister hoist to the Lift Cleat Adapter.

5. Move the STC Lid over the SFP and align with the STC.

6. Wet down the STC Lid and lifting equipment with demineralized water.

7. Ensure that the STC Lifting Device arms are opened.

Note:
An underwater viewing device may be used for monitoring underwater operations.

8. Using the alignment pins and with the STC Lifting Device aligned with the STC trunnions, lower the STC Lid onto the STC.

ALARA Note:
Activated debris may have settled on the STC during fuel unloading. The top surface should be kept under water until a preliminary dose rate scan clears the STC for removal. Users are responsible for any water dilution considerations while the STC and lifting equipment are washed down during removal from the SFP.

9. Engage the STC Lifting Device arms with the STC trunnions.

10. Using an underwater viewing device, visually verify that the STC Lid is properly aligned. If not, disengage the STC Lifting Device arms from the trunnions, reinstall the Lid and repeat as necessary.

11. Lift the STC Lid to apply a slight tension to the STC trunnions and using an underwater viewing device, visually verify that the STC Lifting Device arms are properly engaged to the STC trunnions. If not, lower the STC, reinstall the Lid and repeat as necessary.

12. Slowly raise the STC to just below the SFP surface. Survey the top area of the STC to check for hot particles and remove as required.

13. Continue to raise the STC to allow access to the vent and drain connects.

14. Wash down the STC and lifting equipment with demineralized water for contamination control.

15. Remove a small amount of water from the STC to avoid spilling water during handling.

16. Continue raising the STC while washing down it down with demineralized water.

17. Perform radiological surveys and decontamination as required.

18. Place the STC into the HI-TRAC.

19. Remove the lid alignment pins from the STC flange and install the STC lid studs and nuts. Tighten all lid nuts hand tight.

20. Disconnect the crane canister hoist from the Lift Cleat Adapter.

21. Remove the Lift Cleat Adapter and Lift Cleats from the STC Lid and store in the plant designated area.

22. Ensure the STC Lid bolting is installed and tightened to wrench tight.

23. Remove the piping connections from STC lid vent and drain ports and install the vent and drain port cover plates. Tighten the cover plate bolts wrench tight.

24. Install HI-TRAC Solid Top Lid and tighten the bolting to the pre-stress requirements specified in Section 6.2.1.2.

10.5 Maintenance and Off-Normal Events

10.5.1 Crane Operational Event

1. In the event of a crane hang-up or loss of power, perform one the following:

    a. Restore power to the crane.

b. Perform radiation surveys to establish stay time limits and other radiological controls required for personnel in the area around the STC. Manually lower the load to a safe location which will ensure the STC is in an analyzed condition. This is either in the SFP or in the HI-TRAC. The main hoist lowering, bridge, and trolley movement can be manually performed using the crane manufacturer's maintenance and operations instructions. If the time that the STC has been out of the water approaches the time-to-boil limit specified in Section 5.4.6, then cool the STC by either spraying the exterior of the STC with water or by circulating borated water, minimum 2,000 ppm, through the STC. Personnel must take steps to verify and maintain boron concentration in the spent fuel pool if cooling water is introduced to the pool.

10.5.2 Water Inventory Control During Loading Delays

1. To ensure water levels are maintained in the STC following removal from the SFP and prior to the sealing of the STC ports for transfer, water shall be circulated through the STC daily to insure that the internal cavity is filled. A suitable borated (2000 ppm) or SFP water source may be connected to the STC drain. Water shall be added until water exits the STC vent connection refilling the STC as necessary. The STC shall be vented to the SFP or other suitable radiological waste system to prevent pressure from building up in the canister. The above requirements are not applicable during the 24 hour pressure rise test.

2. To ensure water levels are maintained in the HI-TRAC/STC annulus region, the water level shall be checked daily and refilled to a level no more than 1" below the top of the top flange of the STC when a loaded STC is in the HI-TRAC and the HI-TRAC top lid has not been bolted closed.

3. Once the STC has been sealed and tested, STC water inventory verification is NOT required.

10.5.3 VCT Breakdown

1. Maintain transfer requirements and controls per section 10.3.1 until the VCT is repaired.

2. Using the VCT manufacturer's instructions, perform the required maintenance to restore VCT operations.

10.5.4 Vertical Cask Drop Recovery Plan

1. Inspect the HI-TRAC external surfaces for damage and the ability to handle the HI-TRAC with the VCT and/or the LPT. Make repairs as required for handling.

2. Perform surveys and implement HI-TRAC unloading controls as defined in Section 10.5.5 for a potential failed fuel assembly.

3. Inspect the STC external surfaces for damage and the ability to handle the STC with the lifting devices. Make repairs as required for handling.

4. Perform surveys and implement STC unloading controls as defined in Section 10.5.5 for a potential failed fuel assembly.

10.5.5 Potential Damaged Fuel Assembly after Accident Condition

ALARA Note:
A gas sample analysis is performed to determine the condition of the fuel cladding in the STC. The gas sample may indicate that fuel with damaged cladding is present in the STC. The results of the gas sample test may affect personnel protection and how the gas is processed during HI-TRAC and STC depressurization.

1. Connect radiological gas sampling equipment to the HI-TRAC vent. Route discharge from sampling equipment to plant processing system.

2. Collect a gas sample from inside of the HI-TRAC and test it for the presence of radiological gases. Radiological gases found inside of the HI-TRAC may indicate that fuel cladding may be damaged and that the STC containment boundary and/or seal has been compromised. Based on the results of gas sample analysis, establish the radiological controls needed for gas handling and radiation exposure controls.

3. Depressurize the HI-TRAC per Section 10.4.1.

4. Connect radiological gas sampling equipment to the STC vent. Route discharge from sampling equipment to plant processing system.

5. Collect a gas sample from inside of the STC and test it for the presence of radiological gases. Radiological gases found inside of the STC may indicate that fuel cladding has been damaged and breached. Based on the results of gas sample analysis, establish the radiological controls needed for gas handling and radiation exposure controls.

6. Depressurize the STC per Section 10.4.1.

7. While continuing to monitor and control the radiation exposure to workers, remove the STC lid bolts and return the STC to the SFP per Section 10.4.1.

8. Remove the STC lid per Section 10.4.1 and assess the fuel assemblies for damage that may affect handling via normal means.

9. If the fuel assemblies are intact, remove the fuel assemblies from the STC and store them in the appropriate SFP locations per Section 10.4.2.

10. If the fuel assemblies do not appear to be able to be handled by normal means, develop a plan to remove the fuel assembly from the STC and place it into the fuel rack, using a damaged fuel container, as necessary.

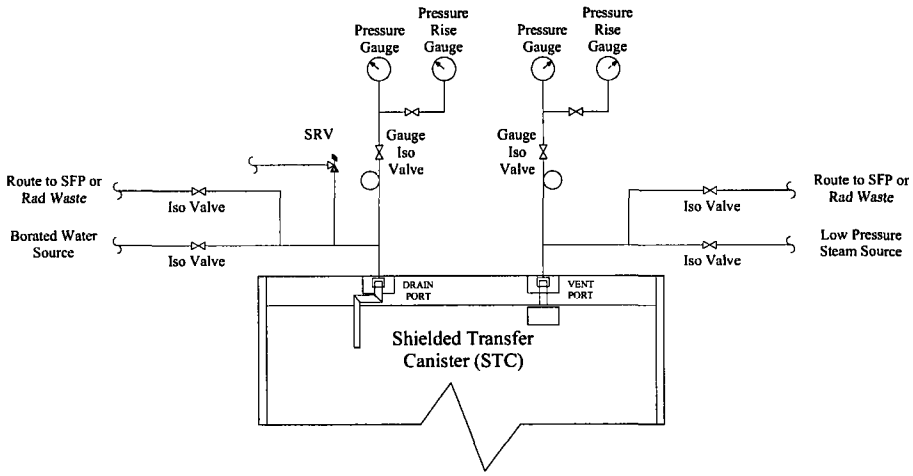

Figure 10.1: Example P&I Diagram for Pressure Monitoring System

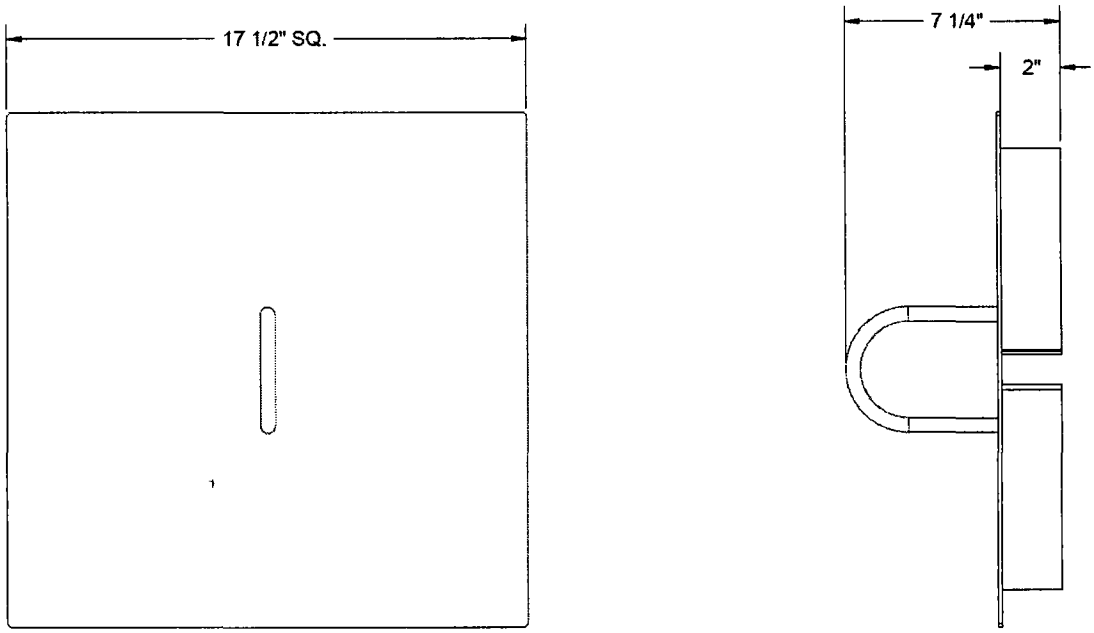

Figure 10.2: Typical Cell Blocker Device

CHAPTER 11: REFERENCES

The following generic industry and Holtec produced references may have been consulted in the preparation of this document. Where specifically cited, the identifier is listed in the text or table. Active Holtec Calculation Packages which are the repository of all relevant licensing and design basis calculations are annotated as "latest revision". Submittal of the latest revision of such Calculation Packages to the USNRC and other regulatory authorities during the course of regulatory reviews is managed by the company's Configuration Control system.

A. United States Code of Federal Regulations

[A.A] U.S. Code of Federal Regulations, Title 10 "Energy", Chapter I "Nuclear Regulatory Commission", Part 50 "Domestic Licensing of Production and Utilization Facilities", January 2006.

[A.B] U.S. Code of Federal Regulations, Title 10 "Energy", Chapter I "Nuclear Regulatory Commission", Part 20 "Standards for Protection Against Radiation", January 2006.

[A.C] United States Code of Federal Regulations Title 10 "Energy", Chapter I "Nuclear Regulatory Commission", Part 72 "Licensing Requirements for the Independent Storage of Spent Nuclear Fuel, High-Level Radioactive Waste, and Reactor-Related Greater than Class C Waste", January 2006.

B. American National Standards Institute (ANSI) Documents

[B.A] ANSI N45.2.1 - Cleaning of Fluid Systems and Associated Components during Construction Phase of Nuclear Power Plants.

[B.B] ANSI N45.2.2 - Packaging, Shipping, Receiving, Storage and Handling of Items or Nuclear Power Plants (During the Construction Phase).

[B.C] ANSI N45.2.6 - Qualifications of Inspection, Examination, and Testing Personnel for Nuclear Power Plants (Regulatory Guide 1.58).

[B.D] ANSI N45.2.8, Supplementary Quality Assurance Requirements for Installation, Inspection and Testing of Mechanical Equipment and Systems for the Construction Phase of Nuclear Plants.

[B.E] ANSI N45.2.11, Quality Assurance Requirements for the Design of Nuclear Power Plants.

[B.F] ANSI N45.2.12, Requirements for Auditing of Quality Assurance Programs for Nuclear Power Plants.

[B.G] ANSI N45.2.13 - Quality Assurance Requirements for Control of Procurement of Equipment Materials and Services for Nuclear Power Plants (Regulatory Guide 1.123).

[B.H] ANSI N45.2.15-18 - Hoisting, Rigging, and Transporting of Items For Nuclear Power Plants.

[B.I] ANSI N45.2.23 - Qualification of Quality Assurance Program Audit Personnel for Nuclear Power Plants (Regulatory Guide 1.146).

[B.J] ANSI N16.9-75 Validation of Calculation Methods for Nuclear Criticality Safety.

[B.K] ANSI/ANS 8.1 (N16.1) - Nuclear Criticality Safety in Operations with Fissionable Materials Outside Reactors

[B.L] ANSI/ANS 8.17, Criticality Safety Criteria for the Handling, Storage, and Transportation of LWR Fuel Outside Reactors

[B.M] ANSI N45.2 - Quality Assurance Program Requirements for Nuclear Facilities – 1971

[B.N] ANSI N45.2.9 - Requirements for Collection, Storage and Maintenance of Quality Assurance Records for Nuclear Power Plants – 1974

[B.O] ANSI N45.2.10 - Quality Assurance Terms and Definitions -1973

[B.P] ANSI/ANS 57.2 - Design Requirements for Light Water Reactor Spent Fuel Storage Facilities at Nuclear Power Plants - 1983.

[B.Q] ANSI N14.6 - American National Standard for Special Lifting Devices for Shipping Containers Weighing 10,000 pounds (4500 kg) or more for Nuclear Materials-1992

[B.R] ANSI/ASME N626-3, Qualification and Duties of Personnel Engaged in ASME Boiler and Pressure Vessel Code Section III, Div. 1, Certifying Activities

[B.S] ANSI N14.6-1993, "American National Standard for Special Lifting Devices for Shipping Containers Weighing 10,000 Pounds (4500 kg) or More for Nuclear Materials", June 1993.

[B.T] ANSI N14.5-1997, "American National Standard for Radioactive Materials – Leakage Tests on Packages for Shipment", June 1997.

[B.U] ANSI/ANS-6.1.1-1977, "American National Standard Neutron and Gamma-Ray Flux-to-Dose Rate Factors", June 1977.

[B.V] ANSI/ANS 57.9-1992, "Design Criteria for an Independent Spent Fuel Storage Installation (Dry Type)", Re-affirmed 2000.

C. USNRC Standard Review Plans (NUREG)

[C.A] NUREG-0612, "Control of Heavy Loads at Nuclear Power Plants", USNRC, Washington D.C., 1980

[C.B] NUREG-0800, "Standard Review Plan for the Review of Safety Analysis Reports for Nuclear Power Plants", Section 3.5.1.4, Rev. 2, July 1981

[C.C] NUREG-0800, "Standard Review Plan for the Review of Safety Analysis Reports for Nuclear Power Plants", Section 9.1.2, Rev. 3, July 1981

[C.D] NUREG-1536, "Standard Review Plan for Dry Cask Storage Systems", USNRC, Washington D.C., January 1997

[C.E] NUREG-1567, "Standard Review Plan for Spent Fuel Dry Storage Facilities", USNRC, Washington D.C., March 2000

[C.F] NUREG-1617, "Standard Review Plan for Transportation Packages for Spent Nuclear Fuel", USNRC, Washington D.C., 2000

[C.G] NUREG/CR-0497, "A Handbook of Materials Properties for Use in the Analysis of Light Water Reactor Fuel Rod Behavior", Revision 2, USNRC, Washington D.C., August 1981

[C.H] NUREG/CR-5661, "Recommendations for Preparing the Criticality Safety Evaluation for Transportation Packages", USNRC, Washington D.C., April 1997

[C.I] NUREG/CR-6322, "Buckling Analysis of Spent Fuel Basket", USNRC, Washington D.C., May 1995

[C.J] NUREG/CR-6407, "Classification of Transportation Packaging and Dry Spent Fuel Storage System Component According to Important to Safety", USNRC, Washington D.C., February 1996

[C.K] NUREG/CR-6760, "Study of the Effect of Integral Burnable Absorbers for PWR Burnup Credit", USNRC, Washington D.C., 2002

[C.L] NUREG/CR-6800, "Assessment of Reactivity Margin and Loading Curves for PWR Burnup Credit Cask Designs", USNRC, Washington D.C., 2003

[C.M] NUREG/CR-6811, "Strategies for Application of Isotopic Uncertainties in Burnup Credit", USNRC, Washington D.C., 2003

[C.N] NUREG/CR-1864, "A Pilot Probabilistic Risk Assessment of a Dry Cask Storage System at a Nuclear Power Plant", USNRC, Washington D.C., 2007

[C.O] USNRC, NUREG-1437, Supplement 38, Generic Environmental Impact Statement for License Renewal of Nuclear Plants, Regarding Indian Point Nuclear Generating Unit Numbers 2 and 3, Draft Report, December 2008

[C.P] Anderson, B.L. et al. *Containment Analysis for Type B Packages Used to Transport Various Contents.* NUREG/CR-6487, UCRL-ID-124822. Lawrence Livermore National Laboratory, November 1996.

D. USNRC Regulatory Guides

[D.A] Regulatory Guide 1.59, "Design Basis Floods for Nuclear Power Plants", Revision 1, April 1976

[D.B] Regulatory Guide 3.61, "Standard Format for a Topical Safety Analysis Report for a Spent Fuel Storage Cask", USNRC, Washington D.C., February 1989

[D.C] Regulatory Guide 7.9, "Standard Format and Content of Part 71 Applications for Approval of Packaging for Radioactive Material", Revision 2, USNRC, Washington D.C., March 2005

[D.D] Regulatory Guide 7.10, "Establishing Quality Assurance Programs for Packaging Used in the Transport of Radioactive Material", Revision 2, USNRC, Washington D.C., March 2005

[D.E] Regulatory Guide 8.8, "Information Relevant to Ensuring that Occupational Radiation Exposure at Nuclear Power Stations will be As Low As Reasonably Achievable", USNRC, Washington D.C., June 1978

[D.F] Regulatory Guide 8.10, "Operating Philosophy for Maintaining Occupational Radiation Exposures As Low As Reasonably Achievable", Revision 1-R, USNRC, Washington D.C., May 1997

[D.G] RG 1.13 - Spent Fuel Storage Facility Design Basis (Revision 2 Proposed)

[D.H] RG 1.25 - Assumptions Used for Evaluating the Potential Radiological Consequences of a Fuel Handling Accident in the Fuel Handling and Storage Facility of Boiling and Pressurized Water Reactors

[D.I] RG 1.28 - (ANSI N45.2) - Quality Assurance Program Requirements

[D.J] RG 1.29 - Seismic Design Classification (Rev. 3)

[D.K] RG 1.31 - Control of Ferrite Content in Stainless Steel Weld Material

[D.L] RG 1.38 - (ANSI N45.2.2) Quality Assurance Requirements for Packaging, Shipping, Receiving, Storage and Handling of Items for Water-Cooled Nuclear Power Plants

[D.M] RG 1.44 - Control of the Use of Sensitized Stainless Steel

[D.N] RG 1.58 - (ANSI N45.2.6) Qualification of Nuclear Power Plant Inspection, Examination, and Testing Personnel

[D.O] RG 1.61 - Damping Values for Seismic Design of Nuclear Power Plants, Rev. 0, 1973

[D.P] RG 1.64 - (ANSI N45.2.11) Quality Assurance Requirements for the Design of Nuclear Power Plants

[D.Q] RG 1.71 - Welder Qualifications for Areas of Limited Accessibility

[D.R] RG 1.74 - (ANSI N45.2.10) Quality Assurance Terms and Definitions

[D.S] RG 1.85 - Materials Code Case Acceptability - ASME Section 3, Div. 1

[D.T] RG 1.88 - (ANSI N45.2.9) Collection, Storage and Maintenance of Nuclear Power Plant Quality Assurance Records

[D.U] RG 1.92 - Combining Modal Responses and Spatial Components in Seismic Response Analysis

[D.V] RG 1.122 - Development of Floor Design Response Spectra for Seismic Design of Floor-Supported Equipment or Components

[D.W] RG 1.123 - (ANSI N45.2.13) Quality Assurance Requirements for Control of Procurement of Items and Services for Nuclear Power Plants

[D.X] RG 1.124 - Service Limits and Loading Combinations for Class 1 Linear-Type Component Supports, Revision 1, 1978

[D.Y] RG 3.4 - Nuclear Criticality Safety in Operations with Fissionable Materials at Fuels and Materials Facilities

[D.Z] RG 3.41 - Validation of Calculational Methods for Nuclear Criticality Safety, Revision 1, 1977

[D.AA] RG 8.8 - Information Relative to Ensuring that Occupational Radiation Exposure at Nuclear Power Plants will be as Low as Reasonably Achievable (ALARA)

[D.BB] DG-8006, "Control of Access to High and Very High Radiation Areas in Nuclear Power Plants"

[D.EE] U.S. Nuclear Regulatory Commission, Atmospheric Dispersement Models for Potential Accident Consequence Assessments at Nuclear Power Plants," Regulatory Guide 1.145, February 1989.

[D.CC] IE Information Notice 83-29 - Fuel Binding Caused by Fuel Rack Deformation

[D.DD] RG 8.38 - Control of Access to High and Very High Radiation Areas in Nuclear Power Plants, June, 1993

E. Interim Staff Guidance (ISG) Documents

[E.A] SFST-ISG-1, "Damaged Fuel"

[E.B] SFST-ISG-2, "Fuel Retrievability"

[E.C] SFST-ISG-3, "Post Accident Recovery and Compliance with 10 CFR 72.122(l)"

[E.D] SFST-ISG-4, Revision 1, "Cask Closure Weld Inspections"

[E.E] SFST-ISG-5, Revision 1, "Confinement Evaluation"

[E.F] SFST-ISG-6, "Establishing Minimum Initial Enrichment for the Bounding Design Basis Fuel Assembly(s)"

[E.G] SFST-ISG-7, "Potential Generic Issue Concerning Cask Heat Transfer in a Transportation Accident"

[E.H] SFST-ISG-8, Revision 2, "Burnup Credit in the Criticality Safety Analyses of PWR Spent Fuel in Transport and Storage Casks"

[E.I] SFST-ISG-9, Revision 1, "Storage of Components Associated with Fuel Assemblies"

[E.J] SFST-ISG-10, Revision 1, "Alternatives to the ASME Code"

[E.K] SFST-ISG-11, Revision 3, "Cladding Considerations for the Transportation and Storage of Spent Fuel"

[E.L] SFST-ISG-12, Revision 1, "Buckling of Irradiated Fuel Under Bottom End Drop Conditions"

[E.M] SFST-ISG-13, "Real Individual"

[E.N] SFST-ISG-14, "Supplemental Shielding"

[E.O] SFST-ISG-15, "Materials Evaluation"

[E.P] SFST-ISG-16, "Emergency Planning"

[E.Q] SFST-ISG-17, "Interim Storage of Greater Than Class C Waste"

[E.R] SFST-ISG-18, "The Design/Qualification of Final Closure Welds on Austenitic Stainless Steel Canisters as Confinement Boundary for Spent Fuel Storage and Containment Boundary for Spent Fuel Transportation"

[E.S] SFST-ISG-19, "Moderator Exclusion Under Hypothetical Accident Conditions and Demonstrating Subcriticality of Spent Fuel Under the Requirements of 10 CFR 71.55(e)"

[E.T] SFST-ISG-20, "Transportation Package Design Changes Authorized Under 10 CFR Part 71 Without Prior NRC Approval"

[E.U] SFST-ISG-21, "Use of Computational Modeling Software"

[E.V] SFST-ISG-22, "Potential Rod Splitting Due to Exposure to an Oxidizing Atmosphere During Short-Term Cask Loading Operations in LWR or Other Uranium Oxide Based Fuel"

[E.W] Interim Staff Guidance-5, Revision 1, "Normal, Off-Normal and Hypothetical Dose Estimate Calculations", June 18, 1999

F. Other USNRC Documents

[F.A] USNRC, "OT Position for Review and Acceptance of Spent Fuel Storage and Handling Applications," April 14, 1978, and Addendum dated January 18, 1979.

[F.B] ANSI N210-1976, "Design Requirements for Light Water Reactor Spent Fuel Storage Facilities at Nuclear Power Stations" (contains guidelines for fuel rack design).

[F.C] USNRC Bulletin 96-04: "Chemical, Galvanic or Other Reactions in Spent Fuel Storage and Transportation Casks", July 5, 1996

[F.D] USNRC Information Notice 96-34, "Hydrogen Gas Ignition During Closure Welding of a VSC-24 Multi-Assembly Sealed Basket", May 1996

[F.E] USNRC ASLB, "Final Partial Initial Decision on F-16 Aircraft Accident Consequences", Docket No. 72-22-ISFSI, ASLB# 97-732-02-ISFSI, dated 2/24/2005.

[F.F] Certificate of Compliance for Spent Fuel Storage Casks, Certificate 1014, Docket 72-1014, Amendment No. 5.

[F.G] NRC Letter (Boska) to Entergy (IPEC) dated June 11, 2009 (ML091520167)

G. American Society of Mechanical Engineers (ASME) Codes

[G.A] ASME Boiler and Pressure Vessel Code, Section II, Parts A – Ferrous Material Specifications, 2004.

[G.B] ASME Boiler and Pressure Vessel Code, Section II, Parts D – Properties, 2004.

[G.C] ASME Boiler and Pressure Vessel Code, Section III, Division 1, Subsection ND – Class 1 Components, 2004.

[G.D] ASME Boiler and Pressure Vessel Code, Section III, Division 1, Subsection NF - Supports, 2004.

[G.E] ASME Boiler and Pressure Vessel Code, Section III, Appendices, 2004

[G.F] ASME Boiler and Pressure Vessel Code, Section V – Nondestructive Examination, 2004

[G.G] ASME Boiler and Pressure Vessel Code, Section IX – Welding and Brazing Qualifications, 2004.

[G.H] ASME Boiler and Pressure Vessel Code, Section XI – Rules for Inservice Inspection of Nuclear Power Plant Components, 2004.

[G.I] ASME Steam Tables, 3rd Edition (1977)

[G.J] ASME NQA-2-1989, Quality Assurance Requirements for Nuclear Facility Applications.

[G.K] Note Used

[G.L] ASME Boiler and Pressure Vessel Code NCA3550 Requirements for Design Documents, latest Edition.

[G.M] ASME Boiler and Pressure Vessel Code NCA4000 - Quality Assurance, latest Edition.

[G.N] ASME NQA-1, Requirements for the establishment and execution of quality assurance programs for the siting, design, construction, operation, and decommissioning of nuclear facilities, 1994 Edition.

H. Other Standards

[H.A] American Society for Testing and Materials, ASTM A 352-93, "Ferritic and Martensitic Steel Castings for Pressure-Containing Parts Suitable for Low-Temperature Service"

[H.B] American Society for Nondestructive Testing, "Personnel Qualification and Certification in Nondestructive Testing", Recommended Practice No. SNT-TC-1A, December 1992

[H.C] American Society for Testing and Materials, ASTM E 1003-05, "Standard Test Method for Hydrostatic Leak Testing"

I. Metamic Reports

[I.A] EPRI Report 1003137, "Qualification of Metamic for Spent Fuel Storage Applications", Palo Alto, CA, October 2001.

[I.B] Holtec Report No. HI-2043215, Latest Revision, "Sourcebook for Metamic Performance Assessment".

[I.C] USNRC Letter, Alexion (NRC) to Anderson (ANO), "Arkansas Nuclear One, Units 1 And 2 - Review Of Holtec Report Regarding Use of Metamic in Fuel Pool Applications", June 17, 2003

[I.D] California Consolidated Technology Inc., "Metamic 6061 +40% Boron Carbide Metal Matrix Composite Test", August 2001.

J. Industry Reports

[J.A] A. Luksic, "Spent Fuel Assembly Hardware: Characterization and 10CFR61 Classification for Waste Disposal", PNL-6909 Vol. 1, Pacific Northwest Laboratory, June 1989

[J.B] EPRI, Greer et al., NP-5128, PNL-6054, UC-85, "The TN-24P Spent Fuel Storage Cask: Testing and Analyses", April 1987

[J.C] Nuclear Systems Materials Handbook, Volume 1 Design Data, TID 26666, Vol. 1, Oak Ridge National Laboratory

[J.D] Peckner and Bernstein, "Handbook of Stainless Steels," First Ed., 1977 (pp 16-17).

[J.E] Craig and Anderson, "Handbook of Corrosion Data," ASM International, First Ed., 1995.

[J.F] LLNL Report UCID-21246, Dynamic Impact Effects on Spent Fuel Assemblies, October 20, 1987, Ramsey Chun, Monika Witte and Martin Schwartz.

[J.G] PVP 2004-2804, "Spent Nuclear Fuel Structural Response When Subject to an End Drop Accident".

K. Holtec Licensing Reports

[K.A] HI-2002444, Revision 9, "Final Safety Analysis Report for the HI-STORM 100 Cask System", USNRC Docket 72-1014

[K.B] HI-2012610, Latest Revision, "Final Safety Analysis Report for the Holtec International Storage, Transport, And Repository Cask System (HI-STAR 100 Cask System), USNRC Docket 72-1008

[K.C] HI-951251, Latest Revision, "Storage, Transport, and Repository Cask System (HI-STAR Cask System) Safety Analysis Report", USNRC Docket 71-9261

[K.D] HI-2089327, Latest Revision, "Licensing Report for Increased Storage Capacity for Indian Point Unit 2 Spent Fuel".

[K.E] HI-2073710, "Safety Analysis Report on the HI-STAR 60 Transport Package", USNRC Docket 71-9336, Latest Revision.

[K.F] HI-89327, Revision 2, "Licensing Report for Reracking Indian Point Unit 2 Spent Fuel Pool".

[K.G] HI-2002444, Revision 1, "Final Safety Analysis Report for the HI-STORM 100 Cask System", USNRC Docket 72-1014

L. Holtec Technical Reports

[L.A] HI-2043215, Proprietary, S. Turner PhD, "Sourcebook for Metamic Performance Assessment", 2004

[L.B] Holtec International Quality Assurance Program, Latest Approved Revision.

[L.C] Quality Assurance Documentation Package for ANSYS (Version 5.3 and Higher), HI-2012627, Revision 3, 2005.

[L.D] Quality Assurance Documentation Package for LS-DYNA 3D, HI-961519, Revision 5, 2006.

[L.E] Holtec International Final Safety Analysis Report for HI-STORM 100 Cask System, Revision 7, dated August 9, 2008.

[L.F] Holtec International Report HI-2084176, "Criticality Safety Evaluation of the IP-3 Shielded Transfer Canister", Latest Revision

[L.G] Holtec International Report HI-2084109, "Shielding Design Calculations of Transfer Canister for Indian Point 3", Latest Revision

[L.H] Holtec International Report HI-2084146, "Thermal Hydraulic Analysis of IP3 Shielded Transfer Canister", Latest Revision

[L.I] Holtec International Report HI-2084118, "Shielded Transfer Canister Structural Calculation Package", Latest Revision

[L.J] Holtec International Report HI-2094405, "Dose Versus Distance From A HI-STORM 100S Version B Containing the MPC-32", Latest Revision

[L.K] Holtec International Report HI-2012630 "Burnup Credit for the MPC-32" , Latest Revision

[L.L] Holtec International Report HI-2032973 "Commercial Reactor Critical Benchmarks for Burnup Credit" , Latest Revision

[L.M] Holtec International Report HI-2032982 "Isotopic Benchmarks for Burnup Credit" , Latest Revision

[L.N] Holtec International Report HI-2033039 "Critical Experiment Benchmark" , Latest Revision

[L.O] Holtec International Report HI-2094486 "MCNP Benchmark Calculations" , Latest Revision

[L.P] Holtec International Report HI-951322 "HI-STAR 100 Shielding Design and Analysis for Transport and Storage", Latest Revision

M. Computer Codes (Public Domain)

[M.A] ANSYS, Version 5.7, 7.0, 9.0, or 11.0

[M.B] CASMO-4 (A), Version 1.13.04 (Unix), 2.05.03 (Windows), or 2.05.14 (Windows)

[M.C] CASMO-3 (A), Version 4.4 or 4.7

[M.D] LS-DYNA3D (A), Version 936, 940, 950, 960, 970, or 971

[M.E] FLUENT (A) Version 6.3.26.

[M.F] KENO-5A (A), Version 4.3 or 4.4

[M.G] MCNP (A), Version 4A , 4B, or 5

[M.H] ORIGENS (Scale), Version 4.3 or 4.4

[M.I] SAS2H (Scale), Version 4.3 or 4.4

N. Handbooks/Texts

[N.A] Crane Manufacturer's Association of America (CMAA), Specification #70, 1988

[N.B] Shah, M.J., Klymyshyn N.A., and Kreppel B.J., "HI-STAR 100 Spent Fuel Transport Cask Analytic Evaluation for Drop Events", Packaging, Transport, and Security of Radioactive Materials, Vol. 18, No. 1, W.S. Maney & Sons (2007).

[N.C] "Mechanical Design of Heat Exchangers and Pressure Vessel Components", by K.P. Singh and A. I. Soler, Arcturus Publishers, Cherry Hill, New Jersey, 1100 pages, hardbound (1984).

O. Holtec Patents

[O.A] "Fuel Basket", Patent No. 5,898,747, April 27, 1999.

[O.B] "HI-STORM Overpack", Patent No. 6,064,710, May 16, 2000.

[O.C] "Duct Photon Attenuator", Patent No. 6,519,307B1, February 11, 2003.

[O.D] "HI-TRAC Operation", Patent No. 6,587,536B1, July 1, 2003.

[O.E] "Cask Mating Device (Hermetically Sealable Transfer Cask)", Patent No. 6,625,246B1, September 23, 2003.

[O.F] "Improved Ventilator Overpack", Patent No. 6,718,000B2, April 6, 2004.

[O.G] "Below Grade Transfer Facility", Patent No. 6,793,450B2, September 21, 2004.

[O.H] "HERMIT (Seismic Cask Stabilization Device)", Patent No. 6,848,223B2, February 1, 2005.

[O.I] "Cask Mating Device (Divisional)", Patent No. 6,853,697, February 8, 2005.

[O.J] "Davit Crane", Patent No. 6,957,942B2, October 25, 2005.

[O.K] "HI-STORM 100U", Patent No. 7,068,748B2, June 27, 2006.

[O.L] "Forced Helium Dehydrator", Patent No. 7,096,600B2, August 29, 2006.

[O.M] "Below Grade Transfer Facility", Patent No. 7,139,358B2, November 21, 2006.

[O.N] "Forced Gas Flow Canister Dehydration", Patent No. 7,210,247B2, May 1, 2007.

P. Standard Review Plan

[P.A] SRP 3.2.1 - Seismic Classification

[P.B] SRP 3.2.2 - System Quality Group Classification

[P.C] SRP 3.7.1 - Seismic Design Parameters

[P.D] SRP 3.7.2 - Seismic System Analysis

[P.E] SRP 3.7.3 - Seismic Subsystem Analysis

[P.F] SRP 3.8.4 - Other Seismic Category I Structures (including Appendix D), Technical Position on Spent Fuel Rack

[P.G] SRP 3.8.5 - Foundations for Seismic Category I Structures, Revision 1, 1981

[P.H] SRP 9.1.2 - Spent Fuel Storage, Revision 3, 1981

[P.I] SRP 9.1.3 - Spent Fuel Pool Cooling and Cleanup System

[P.J] SRP 9.1.4 - Light Load Handling System

[P.K] SRP 9.1.5 - Heavy Load Handling System

[P.L] SRP 15.7.4 - Radiological Consequences of Fuel Handling Accidents

Q. AWS Standards

[Q.A] AWS D1.1 - Structural Welding Code, Steel

[Q.B] AWS D1.3 - Structure Welding Code - Sheet Steel

[Q.C] AWS D9.1 - Welding of Sheet Metal

[Q.D] AWS A2.4 - Standard Symbols for Welding, Brazing and Nondestructive Examination

[Q.E] AWS A3.0 - Standard Welding Terms and Definitions

[Q.F] AWS A5.12 - Tungsten Arc-Welding Electrodes

[Q.G] AWS QC1 - Standards and Guide for Qualification and Certification of Welding Inspectors

R. Thermal-Hydraulic References

[R.A] Baumeister, T., Avallone, E.A. and Baumeister III, T., "Marks' Standard Handbook for Mechanical Engineers," 8th Edition, McGraw Hill Book Company, (1978).

[R.B] Rohsenow, W.M. and Hartnett, J.P., "Handbook of Heat Transfer," McGraw Hill Book Company, New York, (1973).

[R.C] Creer et al., "The TN-24P Spent Fuel Storage Cask: Testing and Analyses," EPRI NP-5128, PNL-6054, UC-85, (April 1987).

[R.D] Rust, J.H., "Nuclear Power Plant Engineering," Haralson Publishing Company, (1979).

[R.E] Kern, D.Q., "Process Heat Transfer," McGraw Hill Kogakusha, (1950).

[R.F] "A Handbook of Materials Properties for Use in the Analysis of Light Water Reactor Fuel Rod Behavior," NUREG/CR-0497, (August 1981).

[R.G] "Spent Nuclear Fuel Effective Thermal Conductivity Report," US DOE Report BBA000000-01717-5705-00010 REV 0, (July 11, 1996).

[R.H] ASME Boiler and Pressure Vessel Code, Section II, Part D, (1995).

[R.I] Jakob, M. and Hawkins, G.A., "Elements of Heat Transfer," John Wiley & Sons, New York, (1957).

[R.J] ASME Steam Tables, 3rd Edition (1977).

[R.K] "Nuclear Systems Materials Handbook, Vol. 1, Design Data", ORNL TID 26666.

[R.L] "Scoping Design Analyses for Optimized Shipping Casks Containing 1-, 2-, 3-, 5-, 7-, or 10-Year-Old PWR Spent Fuel", ORNL/CSD/TM-149 TTC-0316, (1983).

[R.M] "Qualification of METAMIC for Spent-Fuel Storage Application", EPRI Report 1003137, (October 2001), EPRI, Palo Alto, CA.

[R.N] "Sourcebook for METAMIC Performance Assessment", Holtec Report HI-2043215, Holtec International, Marlton, NJ, 08053.

[R.O] USNRC Docket no 72-1027, TN-68 FSAR & Docket no 72-1021 TN-32 FSAR.

[R.P] Hagrman, Reymann and Mason, "MATPRO-Version 11 (Revision 2) A Handbook of Materials Properties for Use in the Analysis of Light Water Reactor Fuel Rod Behavior," NUREG/CR-0497, Tree 1280, Rev. 2, EG&G Idaho, August 1981.

[R.Q] "Effective Thermal Conductivity and Edge Conductance Model for a Spent-Fuel Assembly," R. D. Manteufel & N. E. Todreas, Nuclear Technology, 105, 421- 440, (March 1994).

[R.R] "Thermal Measurements in a Series of Large Pool Fires", Gregory, J.J. et. al., SAND85-1096, Sandia National Laboratories, (August 1987).

[R.S] "Pressure Loss Characteristics for In-Cell Flow of Helium in PWR and BWR MPC Storage Cells", Holtec Report HI-2043285, Rev. 6.

[R.T] "Fundamentals of Heat and Mass Transfer", 4th Edition, F.P. Incropera and D.P. DeWitt, John Wiley & Sons, Inc., New York, 1996.

[R.U] "Spent Nuclear Fuel Source Terms", Holtec Report HI-2022847, Revision 5 (Holtec Proprietary).

S. Shielding References

[S.A] Forrest B. Brown, Russell D. Mosteller, and Avneet Sood, "Verification of MCNP5," Proceedings of M&C 2003: A Century in Review, A Century Anew, Gatlinburg, Tennessee (April 2003).

[S.B] Fuel Storage Building Floor Plans, Section and Roof Plan, 9321-F-13883, Revision 9

[S.C] 40 Ton Crane Assembly General Arrangement Drawing, SK-1

T. Economic and Environmental Considerations References

[T.A] USNRC Generic Letter 78-11, OT Position for Review and Acceptance of Spent Fuel Storage and Handling Application

[T.B] USAEC, Final Environmental Statement related to operation of Indian Point Nuclear Generation Plant Unit Number 2, Docket 50-247, September 1972, Volume I and II

[T.C] USNRC, Final Environmental Statement related to operation of Indian Point Nuclear Generation Plant Unit Number 3, Docket 50-286, February 1975, Volume I and II

[T.D] Electric Power Research Institute, Report No. NP-3380, Cost Comparison for On-Site Spent Fuel Storage Options, May 1984.

[T.E] Indian Point Energy Center, Indian Point IP-2, Updated Final Safety Analysis Report, Revision 20

[T.F] Indian Point Energy Center, Indian Point IP-3, Updated Final Safety Analysis Report, Revision 2

[T.G] Indian Point Energy Center, Indian Point IP-2, Improved Technical Specifications

[T.H] Indian Point Energy Center, Indian Point IP-3, Improved Technical Specifications

[T.I] Entergy Nuclear Management Manual, Procedure EN-RP-110, ALARA Program

[T.J] U.S. EPA, Federal Guidance Report No. 11, Limiting Values of Radionuclide Intake and Air Concentration and Dose Conversion Factors for Inhalation, Submersion, and Ingestion, DE89-011065, 1988.

[T.K] Northeast Technology Corporation Report NET-173-02, "Indian Point Unit 2 Spent Fuel Pool (SFP) Boron Dilution Analysis."

[T.L] Northeast Technology Corporation Report NET-173-01, "Criticality Analysis for Soluble Boron and Burnup Credit in the Con Edison Indian Point Unit No. 2 Spent Fuel Storage Racks."

[T.M] U.S. EPA, Federal Guidance Report No. 12, External Exposure to Radionuclides in Air, Water, and Soil, EPA 402-R-93-081, 1993.

[T.N] "Indian Point Center ISFSI Dose Evaluations", Entergy Nuclear Management Manual, Procedure ENN-DC-126, Revision 3.

U. Structural References

[U.A] Timoshenko and Gere, Theory of Elastic Stability, McGraw Hill, 1961.

[U.B] IPEC HI-STORM 100 Cask System 72.212 Evaluation Report.

[U.C] Deleted.

[U.D] Holtec Report HI-2094345, Latest Revision, "Analysis of a Postulated HI-TRAC 100D Drop Accident During Spent Fuel Wet Transfer Operation".

[U.E] Rabinowicz, E., "Friction Coefficients of Water Lubricated Stainless Steels for a Spent Fuel Rack Facility," MIT, a report for Boston Edison Company, 1976.

[U.F] Holtec Report HI-2094429, Latest Revision, "Evaluation of Haul Path during fuel transfer between IP-3 and IP-2"

[U.G] Holtec Report HI-2104706, Latest Revision, "Non-Mechanistic Tip-over of HI-TRAC 100D".

[U.H] Levy, S., and Wilkinson, John, "The Component Element Method in Dynamics", McGraw Hill, 1976.

V. Criticality References

[V.A] M.G. Natrella, Experimental Statistics, National Bureau of Standards, Handbook 91, August 1963.

[V.B] J.F. Briesmeister, Editor, "MCNP - A General Monte Carlo N-Particle Transport Code, Version 4A," LA-12625, Los Alamos National Laboratory (1993).

[V.C] "Lumped Fission Product and Pm148m Cross Sections for MCNP," Holtec Report HI-2033031, Rev 0, September 2003 (proprietary).

[V.D] M. Edenius, K. Ekberg, B.H. Forssén, and D. Knott, "CASMO-4 A Fuel Assembly Burnup Program User's Manual," Studsvik/SOA-95/1, Studsvik of America, Inc. and Studsvik Core Analysis AB (proprietary).

[V.E] D. Knott, "CASMO-4 Benchmark Against Critical Experiments", SOA-94/13, Studsvik of America, Inc., (proprietary).

[V.F] D. Knott, "CASMO-4 Benchmark Against MCNP," SOA-94/12, Studsvik of America, Inc., (proprietary).

[V.G] L.I. Kopp, "Guidance on the Regulatory Requirements for Criticality Analysis of Fuel Storage at Light-Water Reactor Power Plants," NRC Memorandum from L. Kopp to T. Collins, August 19, 1998.

[V.H] ANS-8.1/N16.1-1975, "American National Standard for Nuclear Criticality Safety in Operations with Fissionable Materials Outside Reactors," April 14, 1975.

[V.I] "Recommendations for Addressing Axial Burnup in PWR Burnup Credit Analyses", ORNL/TM-2001/273, NUREG/CR-6801, USNRC Office of Nuclear Regulatory Research, March 2003.

[V.J] "Parametric Study of the Effect of Burnable Poison Rods for PWR Burnup Credit", ORNL-TM-2000/373, NUREG/CR-6761, USNRC Office of Nuclear Regulatory Research, March 2002.

[V.K] "Parametric Study of the Effect of Control Rods for PWR Burnup Credit", ORNL-TM-2001/69, NUREG/CR-6759, USNRC Office of Nuclear Regulatory Research, February 2002.

[V.L] "Study of the Effect of Integral Burnable Absorbers for PWR Burnup Credit", ORNL-TM-2000/321, NUREG/CR-6760, USNRC Office of Nuclear Regulatory Research, March 2002.

[V.M] "Summary Report of Commercial Reactor Criticality Data for Crystal River Unit 3", B00000000-01717-5705-00060, Rev. 1, U.S. Department of Energy, April 1998.

[V.N] "Summary Report of Commercial Reactor Criticality Data for McGuire Unit 1", B00000000-01717-5705-00063, Rev. 1, U.S. Department of Energy, April 1998.

[V.O] "Summary Report of Commercial Reactor Criticality Data for Davis Besse Unit 1", B00000000-01717-5705-00070, Rev. 0, U.S. Department of Energy, April 1998.

[V.P] "Extended Capability CASMO-4 User's Manual," Studsvik Report SPP-01/401 Rev. 1.

[V.Q] "2000 World Nuclear Industry Handbook", Nuclear Engineering International, Wilmington Publishing Co., 2000
"1994 World Nuclear Industry Handbook", Nuclear Engineering International, Wilmington Publishing Co., 1994

[V.R] "Assessment of Reactivity Margin and Loading Curves for PWR Burnup-Credit Cask Designs", NUREG/CR-6800 / ORNL/TM 2002/6, March 2003.

[V.S] "Topical Report on Actinide-Only Burnup Credit for PWR Spent Nuclear Fuel Packages", DOE/RW-0472 Rev. 2, Office of Civilian Radioactive Waste Management, September 1998.

[V.T] "Summary Report of Commercial Reactor Critical Analyses Performed for the Disposal Criticality Analysis Methodology", B00000000-01717-5705-00075, Rev. 1, U.S. Department of Energy, August 1998.

[V.U] LA-UR-03-1987, MCNP — A General Monte Carlo N-Particle Transport Code, Version 5, April 24, 2003 (Revised 10/3/05)

[V.V] "Review and Prioritization of Technical Issues Related to Burnup Credit for LWR Fuel", NUREG/CR-6665 / ORNL/TM 1999/303, February 2000.