This drawing and the design it covers are the property of BECHTEL. They are merely loaned and on the borrower's express agreement that they will not be reproduced, copied, loaned, exhibited, or used except in the limited way and private use permitted by any written consent given by the lender to the borrower.

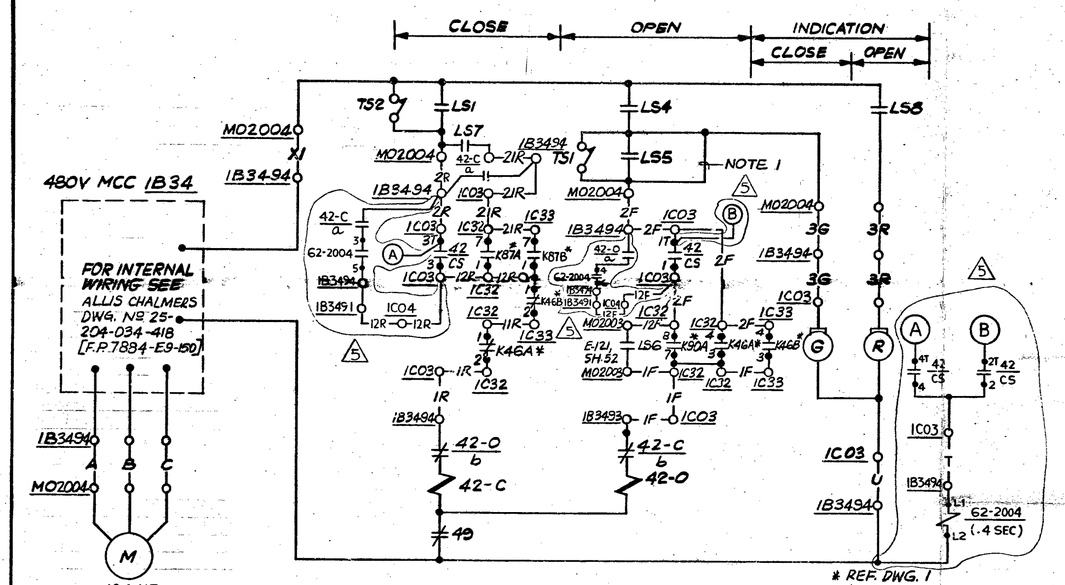

RHR LOOP A DISCHARGE TO LPCI VALVE (OUTBD) CONTROL

SCHEME 1B3494
(REF. DWG. 1, SH. 14)

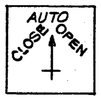

CONTACTS	POSITIONS OPEN	AUTO	CLOSE
1T 1 2 2T	1 ×		
	2 ×		
3T 3 4 4T	3		×
	4		×

GE TYPE SBM SPRING RETURN TO AUTO
CONTROL SWITCH: 42/CS

LIMIT SWITCH				
CONTACT	OPEN	INTER	CLOSE	
LS-1	X			
LS-2	X			SP
LS-3		X	X	SP
LS-4		X	X	
LS-5			X	
LS-6			X	E-121, SH. 52
LS-7	X	X		
LS-8	X	X		
LS-9	X			
LS-10	X			
LS-11		X	X	
LS-12		X	X	
LS-13			X	SP
LS-14			X	
LS-15	X	X		
LS-16	X	X		

TS-1 OPENS WHEN PREDETERMINED TORQUE IN THE OPEN DIRECTION IS EXCEEDED

TS-2 OPENS WHEN PREDETERMINED TORQUE IN THE CLOSE DIRECTION IS EXCEEDED

NOTES:

1. FIELD TO JUMPER TS1 & LS5 CONTACTS AFTER PREOPERATIONAL TESTS ARE COMPLETED.
2. A "▲" INDICATES CABLE IS TO BE TAGGED SEE E-512 PAR. 3.3.2

REFERENCE DRAWINGS:

1. G.E. DWG. 791E418RS, ELEM. DIAG., RESIDUAL HEAT REMOVAL SYS. [F.P. 7884-APED-E11-7-9]

DESCRIPTION	SCHEME Nº.	HP	42 CS	DEVICE					LOCATIONS						REF. 1 SH. NO.
RHR LOOP A DISCH. TO LPCI VLV (OUTBD)	1B3494	104	HS 2004	K87A	K87B	K46B	K46A	K90A	IC03	IC32	IC33	M02004	M02003	1B3494	14
RHR LOOP B DISCH. TO LPCI VLV (OUTBD)	2B4494	104	HS 1904	K88B	K88A	K47A	K47B	K90B	IC03	IC33	IC32	M01904	M01905	1B4494	16

SCHEME NO.	DEVICE	LOCATIONS	
1B3494	62-2004 (TDDO)	IC04	1B3491
2B4494	62-1904 (TDDO)	IC04	1B4491

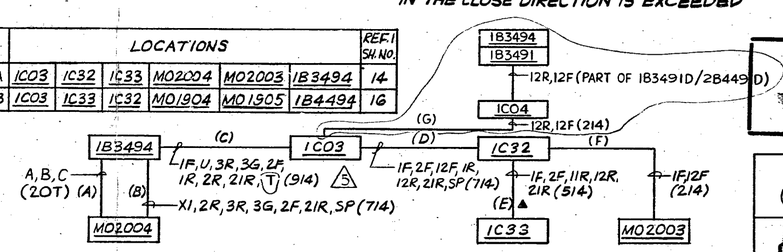

FOR INFORMATION ONLY

REV.	DESCRIPTION	ENG.	DR.	CHK.	SUPV	MATL.	APPROVAL	DATE
5	ADDED TDDO RELAY FOR USE IN THROTTLE CONTROL (DR-1E-G-4)	RMY	AP	RAK				3-6-78
4	REV. PER DR-49-12 MINOR REVISIONS	RMY	AP	RAK				7-14-73
3	K47B, IN DEV. TABLE WAS K46B; ADDED NOTE 2 & MINOR REV.	RMY	AP	RAK				5-8-73

REACTOR CORE COOLING SYSTEMS

JOB No.	DRAWING No.	SHEET	REV.
7884	E-121	53	5

F546

16X F-546

MICROREPRODUCTION DO NOT SCALE

TERA APERTURE CARD

8006260360 Q