This drawing and the design it covers are the property of BECHTEL. They are merely loaned and on the borrower's express agreement that they will not be reproduced, copied, loaned, exhibited, or used except in the limited way and private use permitted by any written consent given by the lender to the borrower.

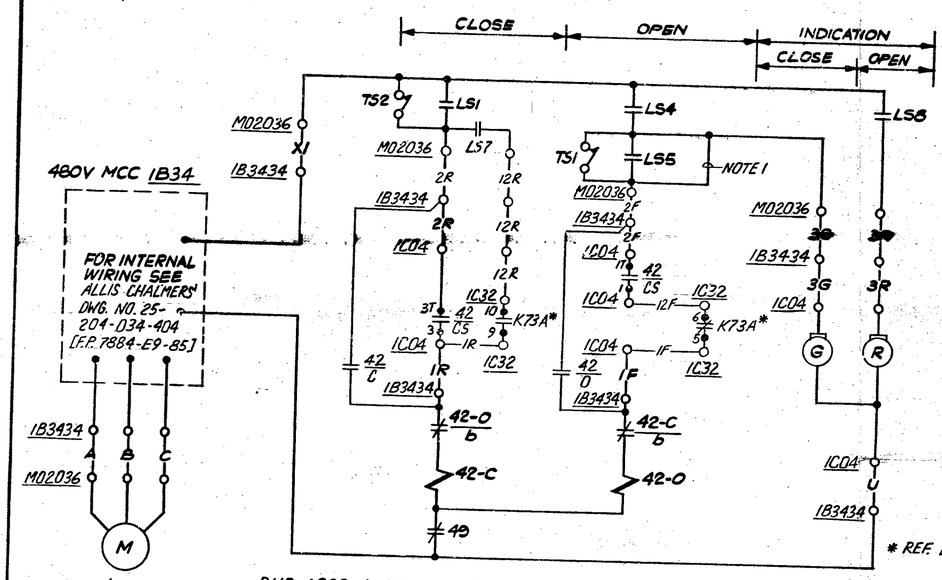

RHR LOOP A DRAIN TO RECIRCULATION VALVE CONTROL SCHEME 1B3434
(REF. DWG. 1, SH. 13)

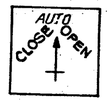

CONTACTS		POSITIONS OPEN	AUTO	CLOSE
1T 1 2 2T	1	X		
	2	X		
3T 3 4 4T	3			X
	4			X

GE TYPE SBM SPRING RETURN TO AUTO
CONTROL SWITCH: 42/CS

NOTES
1 - FIELD TO JUMPER TS1 & LS5 CONTACTS AFTER PREOPERATIONAL TESTS ARE COMPLETED.

LIMIT SWITCH CONTACT	OPEN	INTER	CLOSE	
LS-1	X			
LS-2	X			SP
LS-3		X	X	SP
LS-4		X	X	
LS-5			X	
LS-6			X	SP
LS-7	X	X		
LS-8	X	X		
LS-9	X			
LS-10	X			
LS-11		X	X	
LS-12		X	X	
LS-13			X	SP
LS-14			X	
LS-15	X	X		
LS-16	X	X		

REFERENCE DRAWINGS
1 - G.E. DWG. 791E418RS, ELEM. DIAG., RESIDUAL HEAT REMOVAL SYS. [F.P. 7884-APED-E11-7-6]

TS-1 OPENS WHEN PREDETERMINED TORQUE IN THE OPEN DIRECTION IS EXCEEDED

TS-2 OPENS WHEN PREDETERMINED TORQUE IN THE CLOSE DIRECTION IS EXCEEDED

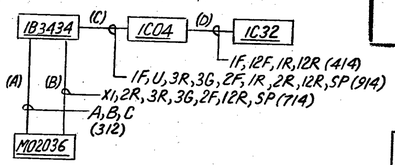

DESCRIPTION	SCHEME NO.	HP	42 CS	DEVICES		LOCATIONS				REF. DWG. 1, SH. NO.	MOTOR FDR CABLE
RHR. LOOP A DRN. TO RECIRC. VLV.	1B3434	1/3	HS2036	10 K73A 9	6 K73A 5	IC04	M02036	1B3434	IC32	13	312
B	2B4435	1/3	HS1967	10 K73B 9	6 K73B 5		M01967	1B4435	IC33	15	
A DRN. TO TORUS VLV.	1B3435	1/3	HS2038	12 K73A 11	8 K73A 7	IC03	M02038	1B3435	IC32	13	
B	2B4436	1/3	HS1970	12 K73B 11	8 K73B 7		M01970	1B4436	IC33	15	

1

FOR INFORMATION ONLY

STARTUP SYSTEM 49

REV.	DESCRIPTION	ENG.	DR.	CHK.	SUPV.	MATL.	APPROVAL	DATE
1	REVISED HP COLUMN	RB	N.P.	T.Fo				2-2-77
0	ISSUED FOR CONSTRUCTION		GTK	T.Fo				10-24-77

REACTOR CORE COOLING SYSTEMS

JOB No.	DRAWING No.	SHEET	REV.
7884	E-121	50	1

F543-

16 X F-543

MICROREPRODUCTION DO NOT SCALE

TERA APERTURE CARD

8006260349 Q