This drawing and the design it covers are the property of BECHTEL. They are merely loaned and on the borrower's express agreement that they will not be reproduced, copied, loaned, exhibited, or used except in the limited way and private use permitted by any written consent given by the lender to the borrower.

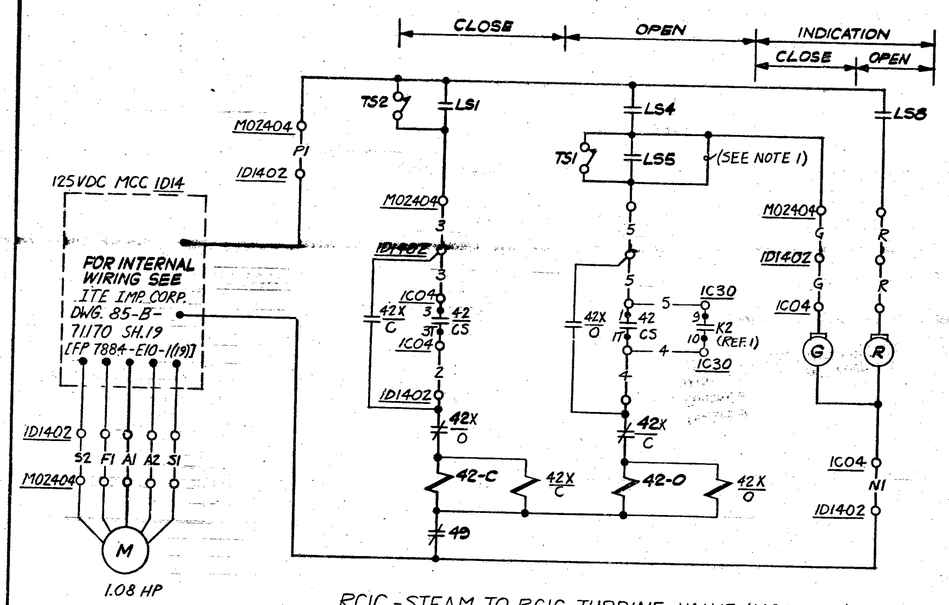

RCIC - STEAM TO RCIC TURBINE VALVE (M02404)
SCHEME 1D1402
(REF. 1, SH.6)

DESCRIPTION	HP	SCHEME	DEVICES 42/CS	DEVICES INTLK.	LOCATIONS				REF. DWG.1
STEAM TO RCIC TURBINE VALVE M02404	1.08	1D1402	HS2404	10 A2 9	M02404	1D1402	1C04	1C30	SH.6
RCIC TURB. COOL. WTR. SUP. VLV. M02426	(in.)	1D1404	HS2426	4 A2 3	M02426	1D1404	↓	↓	↓
PUMP DISCH. VALVE M02511	0.33	1D1407	HS2511	6 A2 5	M02511	1D1407	↓	↓	↓

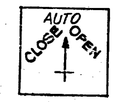

CONTACTS		POSITIONS OPEN	AUTO	CLOSE	
1T 1 2 2T	1	X			
	2	X			SP
3T 3 4 4T	3			X	
	4			X	SP

GE TYPE SBM SPRING RETURN TO AUTO
CONTROL SWITCH : 42/CS

NOTE
1. FIELD TO JUMPER TS1 & LS5 AFTER PRE-OPERATING TESTS ARE COMPLETED

LIMIT SWITCH CONTACT	OPEN	INTER	CLOSE	
LS-1	X			
LS-2	X			
LS-3		X	X	REF. DWG. 1, SH.2 - M02404 ONLY
LS-4		X	X	COMP. C1108, M02404 ONLY
LS-5			X	
LS-6			X	REF. DWG.1, SH.3 - M02404 ONLY
LS-7	X	X		SP
LS-8	X	X		
LS-9	X			SP
LS-10	X			SP
LS-11		X	X	SP
LS-12		X	X	SP
LS-13			X	COMP E-126, SH.9 - M02511 ONLY
LS-14			X	SP
LS-15	X	X		REF. DWG.1, SH.2 - M02404 ONLY
LS-16	X	X		REF. DWG.1, SH.3 M02404 ONLY

REF. DWG.
1. G.E. DWG. 791E421RS. ELEM. DIAG. RCIC SYS. [FP 7884-APED-E51-9-1]

TS-1 OPENS WHEN PREDETERMINED TORQUE IN THE OPEN DIRECTION IS EXCEEDED

TS-2 OPENS WHEN PREDETERMINED TORQUE IN THE CLOSE DIRECTION IS EXCEEDED

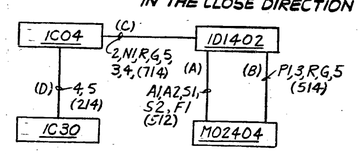

FOR INFORMATION ONLY

STARTUP SYSTEM 50

REV.	DESCRIPTION	DR.	CHK.	SUPV.	MATL.	APPROVAL	DATE
2	REVISED LS-5, LS-11 & LS-13 INTERLOCKS						12-6-72
1	REVISED PER APED CHANGES & ADDED COMP. POINT						7-2-72
0	ISSUED FOR CONSTRUCTION						8-25-72

ENG. AHG RCS; DR. GW.S; CHK. GTK; SUPV. TTC; APPROVAL SC

REACTOR CORE COOLING SYSTEMS

JOB No.	DRAWING No.	SHEET	REV.
7884	E-121	32	2

REACTOR CORE ISOLATION COOLING SYSTEM

F522

16 X F-522

MICROREPRODUCTION
DO NOT SCALE

TERA APERTURE CARD
8006260330 Q