GENERAL ELECTRIC 913E940

ELEM DIAG MOD

RPS MG SET CONTROL (C71-1030)

DUANE ARNOLD

FCF: 284X317

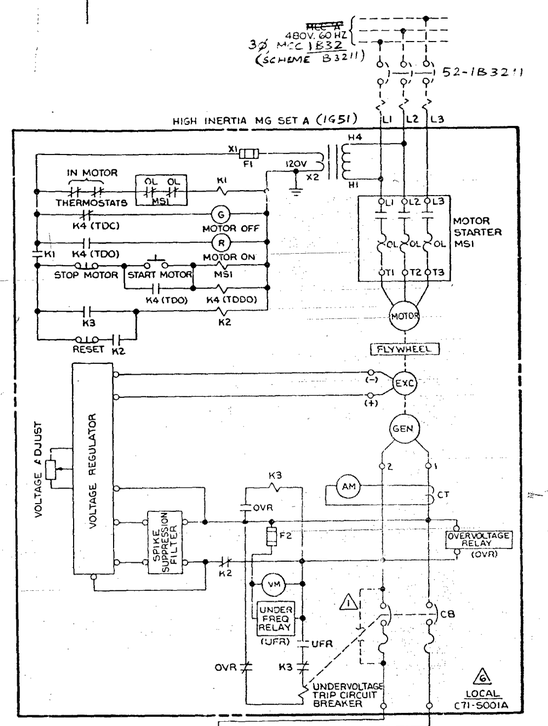

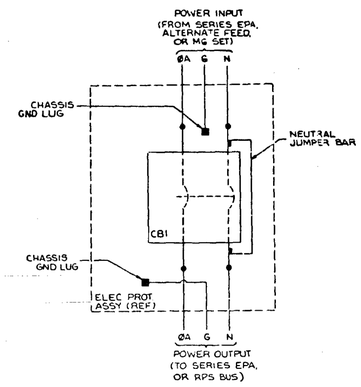

CONNECTION DIAGRAM

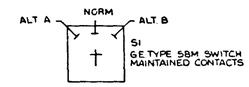

CONTACTS (HANDLE END)	POSITION 4	3	2
1T 1 2 2T	1		X
	2	X	X
3T 3 4 4T	3	X	X
	4	X	

POWER SOURCE SELECT SWITCH

GE TYPE CR105 RELAY TABULATION			
1 2 1L 1T 2L 2T 3 4			
K1A	GEN A FEED	SP	K2A ▲
K1B	GEN B FEED	SP	K2B ▲
K2A	ALT FEED BUS A	SP	K2B ▲
K2B	ALT FEED BUS B	SP	K2A ▲

▲* CONTACT TO BE CONVERTED TO NORMALLY CLOSED POSITION

NOTES:

1. MG SET IS SUPPLIED WITH DOUBLE POLE OUTPUT CIRCUIT BREAKER. FIELD MAY INSTALL JUMPER ACROSS CONTACTS ON THE GROUND SIDE OF THE CIRCUIT BREAKER IF NECESSARY TO MEET A.E. REQUIREMENTS.
2. BUS A AND ASSOCIATED CIRCUIT BREAKERS SHOULD BE SEPARATED FROM BUS B AND ASSOCIATED CIRCUIT BREAKERS WITH A METAL BARRIER.
3. ALTERNATE FEED TRANSFORMER: PRIMARY 480 VOLTS, 60 HZ, 1Ø SECONDARY 115 VOLTS, 1Ø
4. UNLESS OTHERWISE INDICATED, THE FOLLOWING REFERENCE DESIGNATIONS SHOWN ON THIS DIAGRAM ARE PREFIXED WITH C71B.

REFERENCE DESIGNATION	NAME
DSXX	INDICATING LIGHT
FXX	FUSE
KXX	RELAY
SXX	SWITCH
CBXX	CIRCUIT BREAKER

5. CONNECT TO STATION GROUND AT CIRCUIT BREAKER PANEL ONLY.
6. MG SET AND INTEGRAL CONTROLS ARE SHOWN FOR REFERENCE ONLY. FOR ACTUAL CIRCUITRY SEE REFERENCE 3.

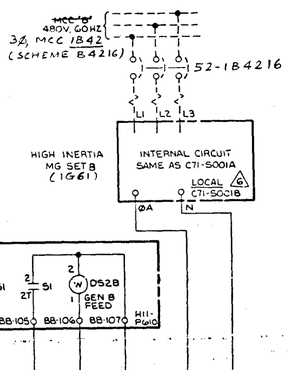

REACTOR PROTECTION AC DISTRIBUTION SYSTEM
IE.P SCHEME 1Y30

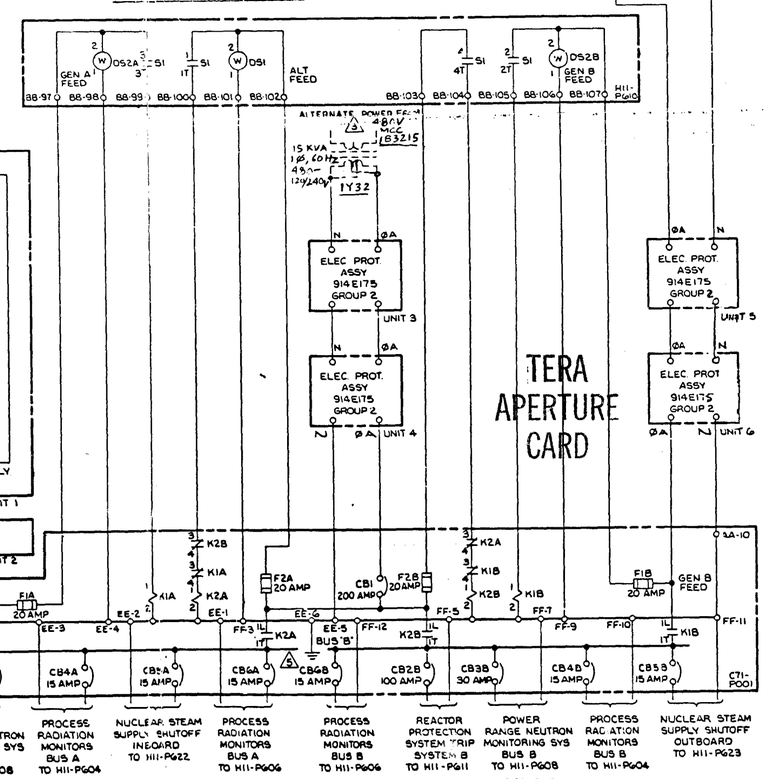

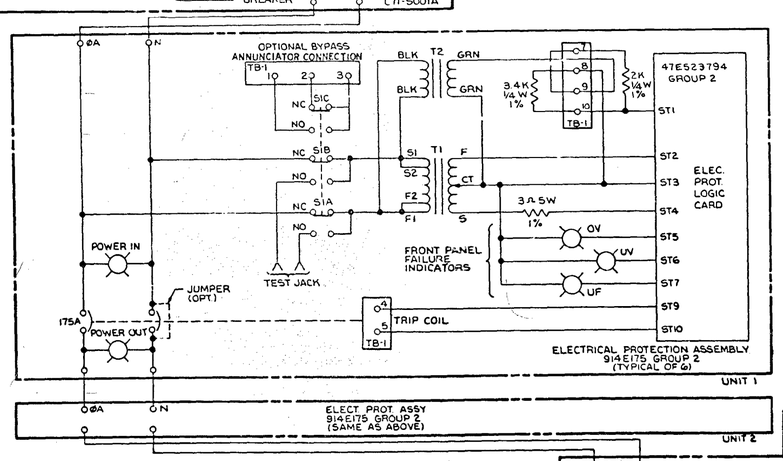

REFERENCE DOCUMENTS:

1. 729E611CA — REACTOR PROTECTION SYS-1ED
2. 225A6249RS — RPS MG SET PURCHASE SPEC.
3. 33008154415 — GE SAC M&G WIRING DIAG.
4. 234A9305RS — RPS BLOCK DIAGRAM
5. 22A3083AF — RPS DESIGN SPECIFICATION
6. VPF3830-83-G — EPA INSTRUCTION MANUAL
7. 21A3120 — EPA PURCHASE SPECIFICATION
8. 22A1878 — EPA INSTALLATION SPECIFICATION
9. IELP/BECHTEL DWG. E-20, SCHEME Y30

RECEIVED
MAY - 4 1981
DESIGN ENGINEERING

APPROVAL
CHK. _____ DATE _____
APPR. _____ DATE _____
Dr. No. APED-C71-027-NI

DOCUMENT REVIEW:
IOWA ELECTRIC LIGHT & POWER
DESIGN ENGINEERING DEPARTMENT
1. X WORK MAY PROCEED.
2. ☐ REVISE AND RESUBMIT. WORK MAY PROCEED SUBJECT TO INCORPORATION OF COMMENTS INDICATED.
3. ☐ REVISE AND RESUBMIT. WORK MAY NOT PROCEED.
4. ☐ REVIEW NOT REQUIRED. WORK MAY PROCEED.

DISCLAIMER: PERMISSION TO PROCEED DOES NOT CONSTITUTE ACCEPTANCE OR APPROVAL OF DESIGN DETAILS, CALCULATIONS, ANALYSES, TEST METHODS OR MATERIALS DEVELOPED OR SELECTED BY THE SUPPLIER AND DOES NOT RELIEVE SUPPLIER FROM FULL COMPLIANCE WITH CONTRACTUAL OBLIGATIONS.

ENGR. _____ GRP. LDR. _____
QA. _____ LICENSING _____
SUPERVISING ENG. NUC. PROJ. _____ INITIAL DATE _____

DCR 1044
DDC 461
IELP P.O.# 42563
G.E. QUOTATION # 416-5555-KE1

REVISIONS			PARTS TO
0	AML-1314		A24
			B79A
			H40K

SCALE NONE — JAN 19 '81 — NPD SAN JOSE — 913E940

FOR INFORMATION ONLY

8201110670

MICROFILMED BY JORM MICROLAB CEDAR RAPIDS • DES MOINES