DISTRIBUTION AFTER ISSUANCE OF OPERATING LICENSE

NRC FORM 195 (2-76)

U.S. NUCLEAR REGULATORY COMMISSION

DOCKET NUMBER 50-331

FILE NUMBER

NRC DISTRIBUTION FOR PART 50 DOCKET MATERIAL

TO:	FROM:	DATE OF DOCUMENT
Mr. Edson G Case	Iowa Elect Light & Power Co. Cedar Rapids, Iowa Lee Liu	10/13/77
		DATE RECEIVED 10/17/77

☑ LETTER	☐ NOTORIZED	PROP	INPUT FORM	NUMBER OF COPIES RECEIVED
☑ ORIGINAL	☑ UNCLASSIFIED			1 SIGNED
☐ COPY				

DESCRIPTION

1p

PLANT NAME: DUANE ARNOLD

jcm 10/18/77

ENCLOSURE

Consists of report entitled "Design and Safety Evaluation for Replacemtn of Spent Fuel Pool Storage Racks," Dated 10/13/77, describing the proposed spent fuel pool storage racks to be installed at DAEC and contains a dafety evaluation as well as an environmental and cost-benefit assessment of the proposed modification

1/4"

40 ENCL.

FOR ACTION/INFORMATION

SAFETY			
BRANCH CHIEF: (7)	LEAR		

INTERNAL DISTRIBUTION

REG FILE			
NRC PDR			
I & E (2)			
OELD			
HANAUER			
CHECK			
[redacted]			
EISENHUT			
SHAO			
BAER			
BUTLER			
GRIMES			
J. COLLINS			
J. McGOUGH			

EXTERNAL DISTRIBUTION

LPDR: CEDAR RAPIDS IA.			
TIC			
NSIC			
16 CYS ACRS SENT CATEGORY B			

CONTROL NUMBER

772910133

MA 4

69

IOWA ELECTRIC LIGHT AND POWER COMPANY

General Office
CEDAR RAPIDS, IOWA

LEE LIU
VICE PRESIDENT - ENGINEERING

October 13, 1977
IE-77-1876

Mr. Edson G. Case, Acting Director
Office of Nuclear Reactor Regulation
U.S. Nuclear Regulatory Commission
Washington, D.C. 20545

Dear Mr. Case:

Transmitted with this letter are 40 copies of a report entitled "Design and Safety Evaluation for Replacement of Spent Fuel Pool Storage Racks," dated October 13, 1977. This document describes the proposed spent fuel pool storage racks to be installed at the Duane Arnold Energy Center (DAEC) and contains a safety evaluation as well as an environmental and cost-benefit assessment of the proposed modification.

The proposed modification has been reviewed and approved by the DAEC Operations Committee and Safety Committee and found not to constitute an unreviewed safety question within the meaning of Section 50.59 of the Commission's regulations. No change in facility Technical Specifications is required by the proposed modification.

Section 5.5 of the DAEC Technical Specifications states that spent fuel shall only be stored in the spent fuel pool in a vertical orientation in approved storage racks. Prompt Commission review and approval of this submittal is requested so that the new racks may be used as soon as feasible.

Sincerely,

Lee Liu
Vice President, Engineering

LL/KAM/ms
Enc.
cc: K. Meyer
D. Arnold
R. Lowenstein
L. Root
File J-81d

DUANE ARNOLD ENERGY CENTER

Docket No. 50-331 License No. DPR 49

DESIGN REPORT AND SAFETY EVALUATION FOR REPLACEMENT OF SPENT FUEL POOL STORAGE RACKS

October 13, 1977

TABLE OF CONTENTS

1.0 INTRODUCTION

This report is submitted in support of Iowa Electric Light and Power Company's (IE) request for approval for use of high density spent fuel storage racks in the existing DAEC spent fuel pool. The proposed modification will increase the spent fuel pool storage capacity to 2,050 fuel assemblies utilizing poisoned fuel storage racks.

The Modifications required to provide the increased storage are limited to the spent fuel pool area. The existing fuel pool structure, cooling and clean-up systems, and other supporting systems do not require modification to satisfy the criteria established in the FSAR. Analyses of the modified storage rack are performed in accordance with current NRC guidance for spent fuel storage and seismic analysis.

The high density spent fuel racks were designed by Programmed and Remote Systems Corporation of St. Paul, Minnesota and are similar in design to spent fuel racks reviewed by the NRC.

The following sections of this report describe and evaluate the design of the proposed storage racks and discuss the environmental and cost benefit assessment.

2.0 DESIGN BASIS

2.1 Functional Basis and Performance Criteria

The spent fuel storage facility modification is designed to provide storage of 2,050 fuel assemblies and maintain the stored fuel in a configuration which limits the subcritical multiplication factor, Keff, to 0.95. Cooling system design, provided to remove decay heat, limits pool temperature to 150°F. Radiological doses are limited to levels established in the FSAR.

2.2 Acceptance Criteria

The new storage racks are designed to the following 10CFR50 Appendix A General Design Criteria and NRC Regulatory Guides:

1) General Design Criterion 2 as related to components important to safety being capable of withstanding the effects of natural phenomena.

2) General Design Criterion 3 as related to protection against fire hazards.

3) General Design Criterion 4 as related to components being able to accommodate the effects of and to be compatible with the environmental conditions associated with normal operation and postulated accidents.

4) General Design Criterion 62 as related to the prevention of criticality by physical systems.

5) Regulatory Guide 1.13 as it relates to the fuel storage facility design to prevent damage resulting from the SSE and to protect the fuel from mechanical damage.

6) Regulatory Guide 1.29 as related to the seismic design classification of facility components.

3.0 SYSTEM DESCRIPTION

3.1 General Description and Arrangement

The proposed modification provides safe storage for up to 2050 spent fuel assemblies in the spent fuel pool (SFP) by replacement of the existing spent fuel racks with new spent fuel racks. The proposed modifications do not alter the structure of the SFP or the supporting cooling systems.

The new spent fuel racks are a bolted anodized aluminum construction having a neutron absorber medium of natural B_4C in an aluminum matrix core clad with 1100 series aluminum. The neutron absorber, marketed under the trade name of Boral, is sealed within two concentric square aluminum tubes forming the "poison can". The minimum weight of total boron per unit area of poison material is 0.129 grams/cm^2.

Figure 3-1 shows the general location of the fuel pool with respect to other plant structures. Figure 3-2 shows the arrangement of the new spent fuel racks in the SFP. There are a total of 21 racks for a total of 2050 cavities. The following table summarizes the different rack sizes:

Quantity	Size	Rack Dead Wt. (#)
1	8 x 8	8,700
2	8 x 10	10,880
9	8 x 11	11,975
5	10 x 11	14,960
4	11 x 11	16,456

3.2 Spent Fuel Rack Construction

The high density spent fuel racks are an all anodized aluminum construction. Figures 3-3 through 3-5 show the basic structural design. They consist of six basic components:

1) top grid castings
2) bottom grid casting
3) poison can assembly
4) side plates
5) corner angle clips
6) adjustable foot assembly

Each component is anodized separately. The top and bottom grids are machined to accurately maintain nominal fuel element spacing of 6.625 inches center to center within the rack. The spacing between the outermost fuel elements in adjacent racks is 9.375 inches center to center. The grid structures are bolted and riveted together by four

3.2 Continued

corner angles and four side shear panels. Large leveling screws are located at the rack corners to adjust for variations in pool floor level of up to ± 0.75". The bearing pad at the bottom of the screws pivots to allow for maintaining a flat uniform contact area. The close-spaced arrangement of the storage racks is such that a fuel assembly cannot be inserted between racks or anywhere within the rack other than in a designed location. Consequences of a dropped fuel assembly on top or outside the rack assembly are discussed in Section 4.1.6.

Pockets are cast in alternate cavity openings of the grids into which the poison cans rest. This arrangement provides sufficient separation to ensure that no structural loads will be imposed on the poison cans. The Boral in the poison cans is positioned so that it extends at least one inch beyond the top and bottom of a fuel assembly of maximum active length. The outer can is formed into the inner can at the ends and totally seal welded to isolate the boral from the pool water. Each can is pressure and vacuum leak tested.

Table 3.1 presents materials, alloys, finishes and material specifications used in the spent fuel module assembly.

3.3 Rack Interface with Spent Fuel Pool

The racks are a free standing design. The only interface with the floor are the four stainless bearing pads attached to the corner leveling screws. A 1/4 inch ABS plastic sheet separates this pad and the aluminum leveling screw to prevent galvanic corrosion. The ABS plastic sheet is held in place by the geometric configuration of the adjustable foot.

The rack sizes are designed such that the corner feet straddle the existing swing bolts provided on the pool floor for the present racks, thereby eliminating floor interferences. The bottom of the racks are 7.25 to 8.25 inches above the floor in order to clear the present swing bolts and provide coolant flow under the racks. The periphery of the racks clear the walls, sparger pipes, and any other wall attachments by at least 6½ inches. This arrangement provides ample clearance for thermal downflow and seismic displacement. Provisions have been made for cooling flow in the corner cavities between the foot assembly and bottom of the casting.

3.4 Quality Assurance Program

The rack design control, design verification, material control, and rack fabrication are accomplished by procedures that satisfy the requirements of ANSI N45.2 "Quality Assurance Program for Nuclear Power Plants".

Special Quality Control programs are in effect to ensure that the Boral has the required minimum and uniform B_4C density in the sheet. Included is a non-destructive chemical analysis sampling program which maintains a high level of confidence of uniform B_4C density. Traceability of all components to a heat lot is maintained during the rack fabrication. The Boral has complete traceability along with a map of its final position in the rack. The Boral traceability is as follows: The stock sheets are etched with a serial number by the manufacturer "Brooks & Perkins" who maintains traceability to original aluminum and B_4C lots and test samples. This serial number along with a dash number is etched into each part cut from the stock sheet. The cavities are also serialized. At assembly a log is maintained including the cavity assembly weight and record of all dimensional, seal, and LP tests. Finally a dimensional, visual, and functional inspection of the rack is performed by the manufacturer at the site prior to rack installation. Sealed Boral coupons are provided for inservice surveillance.

The following documents comprise the final documentation package:

Design Documents

1. As-built module assembly/detail drawings
2. Installation Drawing
3. Design Report
4. Installation Procedures

Quality Control Documents

1. Inspection Status form, modules
2. Inspection Status form, cavities
3. Map location of cavities and boral
4. Nominal material test reports
5. Weld Rod Certifications
6. Weld identification and welder qualifications
7. Inspection identification and qualifications
   a. Liquid Penetrant
   b. Seal Test
8. Certification of Conformance for Anodizing

4.0 DESIGN EVALUATION

4.1 Criticality Considerations

4.1.1 Design Criteria

The design of the revised fuel storage rack complies with all criteria established for the existing fuel storage rack as described in the DAEC FSAR. For any operating or accident condition which is a design basis for DAEC, the subcritical multiplication factor (Keff) is maintained below 0.95. This includes the worst-case postulation of a dropped fuel element.

4.1.2 Analysis Methods

The criticality safety analysis was performed principally by means of a series of diffusion theory calculations utilizing the CHEETAH-B/CORC-B/PDQ-7 model. CHEETAH-B is the BWR lattice version of the CHEETAH code. The effective boron cross section is calculated using CORC-Blade. The CHEETAH-B/CORC-B/PDQ-7 model, which is also a part of the LEAHS (Lifetime Evaluation and Analysis of Heterogeneous Systems) nuclear analysis series of Control Data Corporation, has been extensively tested through benchmarking calculations of measured criticalities as well as through core physics calculations for several existing operating power reactors.

The two dimensional X-Y four group PDQ calculations included zero axial buckling to account for no axial leakage. A zero current boundary condition was employed on all four outer boundaries of a storage cell to produce an infinite array effect: this configuration is considered to be the base geometry.

The results of the reference case calculated by the CHEETAH-B/PDQ-7 model were further compared with the results of an independent calculation using the multigroup, multidimensional Monte Carlo Neutron Transport Code KENO-IV which uses the 123 GAM-THERMOS library.

4.1.3 Bases/Assumptions

The following conservative assumptions are used for both normal and abnormal configuration analyses:

1. Fuel is unchanneled.
2. Enrichment of new fuel is 3.1 weight % U-235, which represents the most reactive fuel that might be utilized at DAEC. No credit is taken for depletion.
3. Minor structural members are replaced by water.
4. No credit is taken for soluble poison in the pool water or fixed poison in the fuel assembly.

The basic cell center-to-center dimension is 6.625 inches square. The rack cavity is made of aluminum and has an opening of 5.900 inches square. Since the fuel assembly cross section itself is a 5.226 inch square, there exists a free space of 0.337 inches on each side of the four sides between the fuel assembly face and the inside wall of the top casting. The normal case was calculated at a temperature of 68° F. Off-center fuel assembly loading configurations were also examined. The free space existing between a properly centered fuel assembly and the top casting allows an assembly to be loaded off center in a cavity. The design case is a 16-assembly cluster with assemblies loaded off center in their cavities and preferentially leaning toward the center of the cluster. The zero current boundary condition applied to the cluster outer boundaries produces an effect of an infinite array of these 16-assembly clusters in both directions of the X-Y plane.

In addition to the clustering effect, this configuration includes the worst-condition design geometrical and mechanical tolerances. The center-to-center spacing was reduced by 0.125 inches from 6.625 inches to 6.500 inches. The top casting opening was enlarged by 0.06 inches which now reduced the center-to-center spacing by .187 inches to 6.437 inches.

4.1.4 Results

The results of criticality analysis for the normal design case and the off-center clustered design case yield a maximum Keff of less than 0.92.

4.1.5 Temperature and Boiling Effects

Using the normal geometry, the temperatures of the pool water and the fuel were allowed to range from 68° F. to 200°F. The reactivity change was calculated at 95° F., 120°F, 160°F., and 200°F. The result was that reactivity decreases as temperature increases and Keff remains less than 0.92.

4.1.6 Accident and Abnormal Conditions

Although the storage rack is designed to prohibit insertion of a fuel assembly anywhere except at a design location, the dropping of a fuel element could result in an unintended fuel element location adjacent to the rack. Two locations are credible:

1) on top of the storage rack, and
2) outside the rack assembly between the outermost rack and spent fuel pool wall.

The consequences of a dropped fuel assembly on top of the other fuel assemblies results in Keff less than 0.95.

The evaluation of a fuel assembly dropped along side the rack is performed by conservatively assuming that the dropped assembly lodges parallel to an off-centered assembly in the outmost cavity. The analysis indicates that Keff is less than 0.95.

4.1.7 Conclusion

For both nominal fuel element spacing and postulated worst-case clustering of fuel elements, analyses indicate that a fully-loaded fuel pool would remain substantially subcritical. This is based on conservative analysis which takes no credit for poisons in the fuel, soluble poisons in the water, or in-core fuel depletion. The accidental drop of a fuel element resulting in a postulated worst-case location does not increase the Keff above 0.95 which is the acceptance criterion for the criticality evaluation.

4.2 Cooling Considerations

4.2.1 Design Bases

The design bases for the fuel pool cooling system has not changed from that described in section 10.5 of the DAEC FSAR. For a normal refueling cycle the fuel pool cooling system must be capable of maintaining the bulk pool temperature below 150° F. For maximum possible heat load, (i.e. the decay heat of a full core at the end of a full cycle plus the decay heat from fuel discharged at previous refuelings), the fuel pool cooling system in conjunction with the Residual Heat Removal (RHR) system must be capable of maintaining the bulk pool temperature below 150° F. For this maximum possible heat load, it is assumed that the storage rack assemblies are fully loaded after the full core is inserted.

The discharge schedule and fuel burnup are given in Table 4-1. For normal conditions, the first bundle is loaded in the SFP 160 hours after reactor shutdown and at a rate of 100 assemblies/day. For a full-core discharge, the rate is 144 assemblies/day with the first bundle loaded in the SFP 120 hours after shutdown. The USNRC Standard Review Plan, Section 9.2.5 "Ultimate Heat Sink" is used to determine the heat load. The highest energy fuel assembly is assumed to be 1.25 times the average of the full-core discharge heat generation rate.

4.2.2 Cooling System Capacity

In the normal cooling condition, the pool storage racks are considered to be filled with spent fuel discharged on the anticipated refueling schedule (Table 4-1). The spent fuel cooling system is in operation with 398,000 lb/hr of cooling water to the shell side of each SFP heat exchanger at 95° F. and 450 gpm of pool water to the tube side at the calculated bulk pool temperature. When a full-core unload of fuel is required, the RHR system will be put into operation to maintain the pool temperature below 150° F. If the SFP cooling system is lost, the RHR system can be placed into operation to fulfill the cooling requirements. A total loss of cooling condition has been analyzed (Section 4.2.4) with the assumption that the pool water level is maintained at its minimum value, i.e. 37 feet.

4.2.3 Pool Thermal Hydraulics

The fuel assemblies are cooled by natural circulation flow through the fuel assemblies. This natural circulation flow loop is created by distribution of inlet cooling water into the warmer pool water in the space above the racks near the pool walls. A natural circulation loop is established by the heating of water in the channels by the spent fuel which is stored therein.

Analysis of this natural circulation loop required that the pressure loss through the fuel assembly for a given flow be calculated. This pressure loss is compared to the buoyant head resulting from the difference in average densities of the fluid in the fuel assembly and in the storage rack above the active fuel assembly and the average density of the fluid in the region outside of the storage racks. If the density difference results in a buoyant head greater than the pressure loss, the flow through the assembly is increased and a new average density of the fluid is determined. This iterative process is repeated until the buoyant head and pressure loss in the fuel assembly are equal.

For the postulated condition where the pool loses all means of external cooling, (Section 4.2.4) the temperature increases to boiling. For this case, the heat transfer from the fuel assemblies in the storage racks was analyzed by assuming that boiling will take place at the exit to the storage rack. Knowing the static pressure at this elevation, the saturation properties of the water are evaluated. This includes the water density, temperature, and steam density. The steam is assumed to separate and flow out of the pool. The water, at the saturation density corresponding to the pressure at the top of the racks flows downward to the inlet of the storage rack. The static pressure at this location is higher than at the exit from the storage rack and

as a result the fluid entering the fuel assembly is subcooled. The subcooled fluid is heated as it passes up the fuel assembly and becomes less dense. In the top third of the fuel assembly, the fluid reaches saturation conditions and net boiling occurs.

4.2.4 Cooling System Failures

The design of existing fuel pool cooling system and the RHR system permits operation of the systems in parallel for conditions which require heat removal in excess of the normal heat load. This arrangement of piping and valves also permits the use of the RHR system as a back-up system in the event of a fuel pool cooling system failure. The fuel pool cooling system itself has the capability of maintaining the pool temperature below 150° F. for normal heat load with only one of two pumps and heat exchangers in operation.

If a complete loss of external cooling is postulated, boiling would occur in the upper third of the most active fuel in the highest power fuel assembly channel. The maximum centerline and fuel-clad temperatures are conservatively calculated to reach 264° F. and 260° F., respectively. The make-up flow rate to maintain a pool level of 37 feet would be 38.8 gpm. In addition to fuel pool cooling and RHR system makeup capabilities, make-up is available from the Emergency Service Water System.

4.2.5 Results of Analysis and Conclusions

Based on existing system design, analyses were performed for the increased heat load to verify that the design bases were still satisfied. The spent fuel pool cooling system is adequate to dissipate the decay heat with normal refueling sequences. With both heat exchangers and both pumps in operation the bulk pool temperature is calculated to be 118° F. With one of the two pumps and one of the two heat exchangers in operation, the bulk pool temperature is calculated to be 142° F. Under the latter conditions, a channel analysis has shown that there is no boiling in the maximum power fuel assembly channel and the maximum fuel centerline and clad temperatures do not exceed 191° F. and 188° F., respectively. The increased heat load resulting from storage of a complete core can be handled by using the RHR system such that pool temperatures do not exceed 150° F.

The analyses confirmed that the small increases in heat load resulting from longer-term storage of the spent fuel in the expanded fuel storage facility were within the margins provided in the original design. No modifications are necessary to satisfy the design bases.

4.3 Mechanical, Material, and Structural Considerations

4.3.1 Design Requirements

The spent fuel pool and spent fuel pool storage racks are Seismic Category I. The storage racks are designed to withstand the effects of an SSE, postulated jammed fuel and fuel drop accidents without loss of structural integrity or functional adequacy, i.e. retention of fuel element spacing and overall geometry. The fuel pool structure is analyzed for the resulting storage rack interface loads.

4.3.2 Loading Combinations and Allowable Stresses

The loading combinations and factored limits are in accordance with section 3.8.4 of the Standard Review Plan included here in Table 4-2. The storage racks are designed to meet applicable requirements of Subsection NF, Section III ASME B&PV Code.

The allowable stresses for stainless steel are in accordance with the ASME Boiler and Pressure Vessel Code Section III Appendix XVII. This is interpreted as being identical to the AISC Steel Construction Manual (Section 5).

The allowable stresses for aluminum members are based on the Aluminum Construction Manual Section 1 Specifications for Aluminum.

The following specifications are used:

Table No.	Description
3.3.3	Factors of Safety for Use with Aluminum Allowable Stress Specification
3.3.4 and 3.3.4b	Formulas for Buckling Constraints
3.3.6	General Formulas for Determining Allowable Stress
5.1.1a	Allowable Bearing Stresses for Building Type Structures
5.1.1b	Allowable Stresses for Rivets, Bolts for Building Type Structures

Table 3.1 lists the pertinent properties of the structural material utilized. The material properties for the SSE seismic analysis and for the thermal excursion are taken at 212° F.

4.3.3 Seismic Analysis

4.3.3.1 Analysis Method

A combination time history/static seismic analysis was performed. A horizontal time history was developed such that the corresponding response spectra enveloped the E-W and N-S SSE spectra for 6% damping, which is conservative with respect to Regulatory Guides 1.60 and 1.61. It was determined in the original seismic analysis that the building will cause no amplification of motion in the vertical direction. A vertical time history was developed such that the corresponding spectra would conservatively envelope the ground response spectra. The horizontal and vertical time histories were then input simultaneously to the dynamic model at the floor spring location. The forces computed from the time history analysis were applied to the static model. Symmetry of the storage rack about the principal axes accounts for the equivalence of this method to simultaneous excitation in three orthogonal directions.

The combination time history/static seismic analysis was done via computer solution programs ANSYS and SAP IV, respectively. The ANSYS, User Manual, Swanson Analysis Systems Inc., Elizabeth, Pennsylvania, documents this program.

SAP IV (public version) for static and dynamic analysis of linear structural systems was used to analyze the mathematical model. The development and documentation of SAP IV was sponsored by grants from the National Science Foundation and was authored by Klaus-Jurgan Bathe, Edward L. Wilson and Fred Peterson of the University of California, Berkeley, California. It is available as Report Number EERC 73-11 revised April, 1974, from the Earthquake Engineering Research Center at the University of California. SAP IV has been installed on a Control Data Corporation Cyber 74 computer in Minneapolis, Minnesota where the model was analyzed.

The following paragraphs describe the mathematical models employed and assumptions used in the seismic rack analysis.

4.3.3.2 ANSYS Seismic Model

The rack structure consists of four side panels bolted top and bottom to a very stiff box grid. The corners of the side panels are riveted together via formed angles. The structural system may, therefore, be visualized as a large square or rectangular tube enveloped by the side panels with no structural stiffness added for either the poison cans or fuel assemblies. Dynamic analyses of a detailed SAP IV model have determined the first two natural frequencies to be orthogonal and simple cantilever

modes at 8 HZ. Successive horizontal frequencies are greater than 28 HZ. A vertical diaphragming frequency of the bottom casting exists at 14-18 HZ.

The rack structure for the simplified dynamic model used in the ANSYS analysis is idealized as a planar frame consisting of a cantilever beam at the base (bottom casting elevation) with leg beams connecting the ends of this member to the floor (See Figure 4-1). Section properties 2-4 are calculated directly from the composite of the four side panels and bottom casting legs. Section 5 is located at the same elevation as Section 3 and is pinned to it at the ends. It represents the vertical diaphragming of the bottom casting. Fundamental frequencies of this idealized system agree closely with the detail model.

To consider the non-linear effects of module rocking and sliding and fuel rattling the ANSYS model is expanded and shown in Figure 4-2. The center pole Section 1 representing the mass and stiffness of all the fuel assemblies, extends the height of the rack. It is pinned at the bottom of the rack and is allowed to impact at the top and top quarter point, nodes 1 and 2, and 3 and 4. A 3/8" gap on each side occurs at these points which represents the fuel assembly to can clearance. For worst case analysis, it is assumed that all fuel in the rack is channeled (thus providing the stiffest section). This transmits the highest impact and overturning loads to the rack. Based upon the stiffness of this member and past analyses, fuel-can impact below the top quarter is unlikely, so that the 3/8" gap at node 5 and 6 will not close. This model conservatively assumes that all fuel assemblies are in phase and move together at all times.

The vertical spring under each leg is known as an "interface element". The interface element represents two plane surfaces which may maintain or break physical contact and slide relative to each other. At each time step, the program compares the horizontal force in the interface element against the coefficient of friction to see if sliding will occur and also allows for uplift and rocking by vertically releasing the element if tensile forces exist in the leg.

A single vertical degree of freedom represents the pool floor under the racks. Its mass is the total pool mass under the area of each rack. The spring rate is calculated to give the same first mode diaphragm frequency as the entire spent fuel floor, water, and racks.

The following assumptions are made relative to the rack submergence in the spent fuel pool:

1) All water entrapped within the rack envelope is added to the horizontal mass but not to the vertical mass.

2) Since the depth of water above the racks is large (greater than 20 feet), surface waves or sloshing effects are ignored.

3) Because the linear dimension of the pool is much smaller than the pressure waves generated by typical earthquakes ($\ell/\lambda << 1$), water in the pool will move in phase with the ground because the walls are rigid. Therefore, external water effects between the rack and the walls are ignored which conservatively assumes that damping forces generated in "pumping" this confined water from the wall rack gap due to the relative motion of the racks are greater than any added external mass effects of this water.

Figure 4-3 represents a two-rack model. It includes all effects of the single-rack model plus the maximum interaction or potential for banging with other racks in the pool. Gap springs are located at the top and bottom casting elevation and are initially closed.

The coefficients of friction values used in the analysis are based on the following test reports: "Simulated Rack Minimum Coefficient of Friction" by PaR and "Friction Coefficients of Water-Lubricated Stainless Steels for a Spent Fuel Rack Facility" by Professor Ernest Rabinowicz of the Massachusetts Institute of Technology, performed for Boston Edison Company. In the latter report, results of the 100 tests performed show a mean value of 0.503 with a standard deviation of 0.125. The upper ($x+2\sigma$) and lower limit ($x-2\sigma$) are 0.753 and 0.253, respectively. The values used in this analysis are 0.2, and 0.8 as lower and upper limits, respectively. Values measured under similar conditions agree closely for both independent tests.

The following free-standing and rack conditions were analyzed:

1. 0.2 coefficient of friction empty single rack.
2. 0.8 coefficient of friction two full racks.

Condition 1 was analyzed to determine maximum displacement of the racks relative to the pool floor. Condition 2 determined the maximum rack loads for the SAP IV static analysis. The coefficients of friction remain constant throughout the time history.

4.3.4 SAP IV Finite Element Model

Figure 4-4 shows the SAP IV computer model. The spent fuel rack is idealized as a three-dimensional detailed finite element model of nodal points, consisting of over 400 flexural beam column elements and over 800 plate

elements representing the side plates and formed angles.

Only two of the module feet are fixed. Reactions for the other two feet and nodal forces needed to put the rack in equilibrium were developed for worst load cases from the ANSYS time-history analysis. These horizontal and vertical static forces were applied to the SAP IV model in the same manner as on the ANSYS model. An equal load set was applied in an orthogonal plane. Stresses were computed using the SRSS method for all members and plates for each of these two load sets and compared against their factored allowables.

4.3.5 Dropped Fuel Bundle Analysis

Analyses were done to define the equivalent static load for the following drop conditions:

1. 18" fuel drop on the corner of the top grid castings and fuel rollover.

2. 18" drop in the middle of the top castings.

3. A fuel drop full length through the cavity impacting on the bottom grid.

The following methods are used in defining the impact loads.

For condition 1, the impact energy losses of the inertia of the rack module and collapsing of the bottom tripod on the fuel bundle fitting were quantified for the 18" vertical drop to determine the net impact energy. Using the SAP IV model, spring rates were determined at various impact locations on the module. A static impact load was then determined for each of these locations by equating the elastic structural strain energy with the net impact energy. These impact loads have been verified by full-size tests on an actual top grid casting.

For condition 2, an unimpeded fuel drop through an empty cavity, a static load was determined to shear out the bottom fuel support. After shear out the fuel bundle impacts the pool liner plate. The resulting load is applied to the pool as an interface load.

Table 4-3 presents the static loads for the various drop and accident conditions.

Equivalent static loads for different dropped fuel bundle cases were then applied at proper locations to the SAP IV finite element model of the module and combined with the dead-weight vertical load (rack full of fuel). Stresses for each member and plate were then tabulated and compared against the factored allowables.

4.3.6 Dropped Shipping Cask

The shipping cask pool is physically separated from the spent fuel pool. Crane movement is restricted by mechanical stops to the area around the cask loading area. This precludes a cask tip or drop into the spent fuel pool.

A postulated cask drop into the shipping cask pool was calculated to penetrate the cask pool bottom in the FSAR. As stated in the Staff SER, as amended, this item is to be resolved in a manner satisfactory to the Regulatory Staff prior to the first refueling operation requiring movement of a shipping cask.

4.3.7 Pool Interface Loads

A structural analysis was made to establish the maximum load carrying capacity of the existing spent fuel pool. This analysis was based on the actual material strength and latest ACI code requirements (ACI 318-71). A compressive concrete strength of 7400 psi and a yield strength of reinforcing steel of 65,700 psi, as determined from laboratory test reports were used. The results of the analysis indicated that the maximum live load (including the associated earthquake loading from fuel rack and fuel elements) should not exceed 2.56×10^6 lbs.

Rack leg vertical gap forces were computed for each time step of the analysis. These loads were used to determine the bearing and punching shear stress in the reinforced concrete floor. The allowable stresses are defined by: Section 1.10, Alternative Design Method, of American Concrete Institute Building Code Requirements for Reinforced Concrete (ACI 318-71). As described in the Commentary to the Code, this section carries forward the working stress design method of ACI 318-63. Under dynamic impact loads, a factor of 1.25 is applied to allowable compressive stress. Information supporting use of this factor is from a publication entitled "Structural Analysis and Design of Nuclear Plant Facilities", prepared by the Committee on Nuclear Structures and Materials of the Structural Division of the American Society of Civil Engineers.

The overall floor load was checked taking the force in the floor spring "Kf" on Figure 4-2 and calculating a total for all the racks by a SRSS technique. This load, 2.04×10^6 lbs, was compared against the floor slab capacity of 2.56×10^6 lbs.

4.3.8 Conclusions

The analyses performed show that spent fuel storage racks are capable of withstanding the loads associated with all the design loading conditions without exceeding allowable stresses. The analysis also indicates that the racks can withstand overturning moments and horizontal forces without structural attachment to the pool.

Interface loads transmitted to the fuel pool are within the load carrying capability of the pool structure, including dropped fuel element loading.

4.4 Construction Methods

The schedule for replacement of existing racks will permit removal of empty racks and installation of the new racks in an area of the pool in which no fuel elements are loaded. After this installation is completed, the fuel in the pool will be transferred to the new racks. The remaining racks will then be replaced by new racks. The timing for this second phase of the installation is not critical since the new racks installed in the first phase will not interact in any manner with the old racks to be removed during the second phase. After the removal of the existing racks during the second phase, the new racks may be installed on an as-needed basis since the analyses do not require the full array of new racks to meet any of the required conditions.

The rack replacement procedures will provide administrative controls to limit movement of loads over spent fuel.

5.0 ENVIRONMENTAL AND COST BENEFIT ASSESSMENT

5.1 Need for Increased Storage Capacity

DAEC commenced power operation in mid 1974. Since that time there have been two refueling outages during which a total of 188 spent fuel assemblies have been discharged from the reactor. No spent fuel has been shipped from the site. There are several reasons for the current need to increase the spent fuel storage capacity.

Full core discharge capability does not presently exist, creating an immediate need for the proposed increased storage capacity. The inability to unload the core does not present a safety problem, however, it could result in an extensive economic penalty in terms of contingency plans and replacement energy costs during a plant outage awaiting core unload. A total of 510 storage spaces are presently provided in the pool, 480 of which are designed for storage of normal spent fuel and 30 of which are designed for storage of defective spent fuel. At the present time, 188 fuel assemblies are stored in the pool, allowing normal storage space for only 292 additional fuel assemblies. This is insufficient to accommodate the 368 fuel assemblies which make up a full core.

Increased spent fuel storage capacity is also required for continued operations of the plant. As shown in Table 4-1, 88 spent fuel assemblies are scheduled to be discharged at each regularly scheduled refueling outage which normally occur early in each year. The spent fuel pool could accommodate the spent fuel from three regular refueling operations, again without full-core discharge capability. Operation could continue until 1981 at which time the core would no longer have sufficient reactivity to continue operation and insufficient spent fuel pool space would be available to permit a refueling operation.

Another important consideration is the amount of open storage capacity that would be required to permit removal and replacement of the existing racks. None of the new racks can be installed until a portion of the existing racks are removed. The existing racks are constructed in two independent seismically supported groups. One must be empty of stored fuel before any dismantling can begin. The smaller of the two groups, which contains 150 storage locations, is to be removed first. This requires that at least 150 open storage locations be available at the time rack replacement begins. Removal of the

5.1 Continued

first group of racks must begin, and some new racks must be in place prior to the refueling scheduled for early 1979 in order to meet this requirement.

Upon completion of the rack modification, the new storage capacity of 2050 fuel assemblies will accommodate the spent fuel from regular refueling, through the year 1993, while still allowing for discharge of a full core. Additional regular refuelings could continue through the year 1998 without the capability for discharge of a full core.

5.2 Radiological Considerations

5.2.1 Radioactivity Released to the Spent Fuel Pool Water

Increasing the number of spent fuel assemblies stored should cause only slight increases in radioactive releases to the SFP water. The majority of the radioactivity released to the pool water occurs at the time fuel is discharged from the reactor. Crud shaken loose during handling initially accounts for most of the activity following fuel handling. Once the initial handling of fuel assemblies is completed, further release of crud is minimal. In addition, the radioactivity of crud decreases with time. The majority of fission products released through defects in the fuel also occurs soon following discharge of fuel from the reactor. As the initial pressure of a defective fuel rod decays, and as decay heat decreases, release of fission products is greatly reduced. The radioactivity released from the increased amounts of older stored fuel is therefore expected to be small in comparison to that from recently discharged fuel. The SFP clean-up system reduces the concentration of radioactivity to equilibrium levels after each refueling and maintains that concentration at a low level in the process of maintaining low turbidity. This is not altered by the storage-rack modification, therefore, no significant changes are expected in the radioactive concentrations in the pool water.

5.2.2 Radioactivity Released to the Atmosphere

Releases of Kr-85 and other noble gases are currently not measurable. Increasing the number of spent fuel assemblies stored should cause only slight increases to the present release rates and are not expected to result in significant increases in noble gases. Noble gases generated in the fission process may escape through defects in fuel rods and be released to the environment through the ventilation

5.2.2 Continued

system. Except for Kr-85, these gases have short half lives and decay to negligible amounts in a short period of time. The short half-life gases originally present will have decayed to negligible amounts during the storage time allowed by the existing storage capacity. Increased storage will, therefore, not alter the contribution from these gases. The internal pressure in defective fuel rods also decreases within a short time after fuel is discharged from the reactor which serves to greatly reduce the leakage of all fission product gases from the fuel, including Kr-85. This effect in combination with the fact that releases of Kr-85 for the newly discharged fuel are extremely low results in a negligible contribution from the Kr-85. Increasing the quantity and duration of fuel storage will, therefore, not have a noticeable effect on the release of radioactive material to the atmosphere.

5.2.3 Radioactive Solid Waste Generation

Solid waste is generated in the spent fuel clean-up filter as the result of spent fuel storage. The activity collected by the filter is directly related to the concentration of radioactivity in the spent fuel pool water. As discussed in section 5.2.1, the storage of additional spent fuel is not expected to significantly effect the concentration of radioactivity in the spent fuel pool water. In addition, after the activity is collected by the spent fuel pool filter, it is discharged to the low level radioactive waste system, where it is processed along with low level wastes from a number of other sources. The waste from the spent fuel pool clean-up system makes up only about 1% by volume of the activity processed by the solid waste system. Therefore, no significant increases in the effects of solid waste generation are expected due to the increased storage of spent fuel.

The process of replacing the racks will generate an increased quantity of solid radioactive wastes on a one-time basis. This will result from the need to dispose of the existing racks, which will involve approximately 60,000 pounds of solid waste. This compares to the approximately 300,000 pounds of solid waste currently generated by the plant annually.

5.2.4 Occupational Exposures

There are three tasks which contribute to personnel exposure which are to be considered: Normal refueling operations over a larger inventory of spent fuel,

5.2.4 Continued

handling of spent fuel pool cleanup, and replacement of the existing racks with high density racks.

5.2.4.1 Radiation Exposure During Fuel Handling Operations

Personnel exposure during fuel handling operations is due to radioactivity in the spent fuel pool water and shine from the radioactive fission products contained in the spent fuel in storage. To date, there has been no detectable dose where personnel have been working over the pool. This is due to the low levels of activity in the spent fuel pool water and the shielding provided by the depth of water over the fuel. Section 5.2.1 concludes that there will be no significant increase in the amount of radioactivity released to the spent fuel pool water due to the increased amount of spent fuel stored. Therefore, there will be no increase in personnel exposure during fuel handling operations from this source.

The radiation shine over the spent fuel pool has been calculated and found to be unmeasurably low. The dose rates from gamma rays were calculated by a variety of methods: by hand using the standard tabulated Perkins fission-product spectrum; with the Oak Ridge transport code ANISN using the Oak Ridge spectrum code ORIGEN; and with the Bettis point kernel code SPAN-4 using its built in spectrum, adjusted in accordance with a careful measurement of the fission product decay spectrum made in 1975 by G.E. for EPRI. A dose rate of 8.3×10^{-6} mrem/hr above the pool with 2050 bundles in the pool was calculated using the adjusted SPAN-4 method, which was the most conservative among the calculational methods used. The effect of the proposed modification upon the radiation exposures above the pool is therefore expected to be insignificant.

5.2.4.2 Spent Resin Handling Radiation Exposure

As discussed in Section 5.2.3, the fuel storage rack replacement will not result in an increase in the activity removed by the clean-up filter except during the process of installing the new racks. Therefore, there will be no change in personnel exposure from filter cleaning after the new racks have been installed.

5.2.4.3 Radiation exposure During Replacement of Racks

Rack replacement activities will be done using techniques designed to maintain the occupational dose as low as reasonably achievable. Plans are generally to work remotely from above the fuel pool. Workmen will stand over the pool, utilizing the pool water as shielding from any contaminants on the racks as well as

5.2.4.3 Continued

from irradiated fuel in the unaffected racks. The racks will be decontaminated during and following removal by hosing, hydrolasing or scrubbing prior to preparations for off-site shipment. The high density racks will be installed using tools remotely controlled by workmen standing over the pool, again using the pool water as shielding. If it is determined that divers can be used to facilitate the removal and replacement procedures while still maintaining low occupational doses, then such procedures will be utilized.

The total non-recurring exposure associated with the removal and installation procedures is expected to be substantially less than the exposure associated with normal maintenance and inspection procedures. Individual doses will be within established requirements.

5.2.5 Environmental Impact of Accidents

The design basis fuel handling accident for DAEC occurs over the reactor core where fuel is handled at a greater distance above other fuel than in the spent fuel pool, resulting in more severe consequences. The proposed modifications do not affect the movement of fuel over the reactor core, and, therefore, do not affect the probability or consequences of this design basis accident.

5.2.6 Off-site Effects

5.2.6.1 Radiological Effects

No significant increase in normal releases is expected as a result of the proposed modification; therefore, no increase in the effects offsite are expected.

5.2.6.2 Transportation and Handling

Delivery of material for the new high density storage racks and disposal of the existing racks for off-site burial will involve truck and/or rail transportation activity. The number of such shipments will be less than would be required to ship the spent fuel offsite at this time. By deferring offsite shipment of spent fuel, a number of factors can be considered that will reduce the overall environmental impact: More fuel might be loaded per shipping cask, reducing the number of miles in transport; a lighter shipping cask may be used, reducing the tonnage in transport; the

5.2.6.2 Continued

reduced radiation level of spent fuel will further reduce the already minimal environmental impact of spent fuel shipments which are covered by the Final Environmental Statement.

As long as fuel is stored on site, transportation and associated fuel handling is eliminated and no environmental impact from transportation or handling results. On-site storage eliminates the possibility of double shipments which would result from shipping the fuel to an interim point offsite and then to a terminal point such as a reprocessing or final disposal facility. Therefore, the proposed action avoids the slight environmental impact of transportation associated with interim offsite storage facilities.

5.3 Other Environmental Effects

5.3.1 Land Use

The proposed modification will not alter the use of land but make more efficient use of land already designated for spent fuel storage. The spent fuel storage pool is entirely contained within the existing reactor building structure. The structure of the pool will not be altered by the proposed modification.

5.3.2 Water Use

There will be no significant change in plant water usage as a result of the proposed modification. The increased storage will add a small but relatively insignificant amount of heat to the pool water. The increase in water makeup attributable to the modification because of increased evaporation from the pool will be undetectable in the total plant makeup water requirement.

5.3.3 Heat Rejection

The increased storage will slightly increase the rate of heat load from the fuel. This increase will be insignificant particularly compared to the heat rejected from the secondary system heat cycle at the main condenser and further does not constitute a net increase of effect on the environment because this heat loss would occur regardless of the location where the spent fuel is stored.

5.4 Cost/Benefit Analysis

5.4.1 Cost of Proposed Modifications

5.4.1.1 Capital Costs

The total installed capital cost of the proposed high density fuel storage racks is estimated to be $2,500,000 including all labor, materials, engineering, overhead, and allowance for funds during construction. Plant operating costs will not be affected by the modifications.

5.4.1.2 Resources Committed

The proposed action will not result in any irreversible and irretrievable commitments of water, land, and air resources as identified in the Final Environmental Statement. No additional allocation of land would be made, the land area now used for the spent fuel pool will be used more efficiently by increasing the density of fuel storage spaces. The irreversible commitment of materials used to construct the proposed storage racks is compared to the annual consumption of these materials in the United States as follows:

Material	Amount Consumed in Racks (lbs)	Approximate Annual US Consumption (lbs)
Stainless Steel	630	10^{11}
Boron Carbide	61,500	10^{6}
Aluminum	217,300	10^{10}

The material required is seen to be insignificant with respect to the annual U.S. consumption and does not represent a significant irreversible commitment of material resources. In any event, an equivalent amount of these or similar materials would be required wherever the fuel is stored.

5.4.2 Evaluation of Alternatives

Alternatives having the potential to alleviate the current need for additional spent fuel storage capacity were evaluated. The evaluation considered the availability, the benefits, the environmental impact, and the cost which ultimately affects the cost of electrical power to customers in the IE service area. The alternatives are compared in this section.

5.4.2.1 Reprocessing

There is presently no licensed nuclear fuel reprocessing plant in the United States. In addition, on April 7, 1977, President Carter issued a statement outlining his policy on continued development of nuclear power in the United States. He said, "We will defer indefinitely the commercial reprocessing and recycling of plutonium produced in the U.S. nuclear power programs. From our own experience, we have concluded that a viable and economic nuclear power program can be sustained without such reprocessing and recycling."

Because of this indefinite deferral, reprocessing is not considered an available alternative for the current need for spent fuel storage at DAEC.

5.4.2.2 Off-Site Storage at an Independent Spent Fuel Storage Installation (ISFSI)

There are presently no off-site facilities available for the storage of spent fuel from DAEC, and it is unlikely that any such facility could become available in time to meet the requirements of the plant. No contract presently exists between IE and any existing or planned facility capable of storing spent fuel.

It was originally intended that spent fuel from DAEC would be shipped to the Morris Operations facility owned by General Electric for reprocessing. Contractual arrangements for reprocessing spent fuel from DAEC at Morris were never completed. General Electric has since withdrawn from the reprocessing business and operates the Morris facility as an ISFSI. Utilities with contracts with General Electric for spent fuel reprocessing have spent-fuel storage requirements in excess of the capacity of the Morris facility. This has led to legal questions as to the extent of General Electric's obligations for spent fuel storage under its reprocessing contracts. In view of this situation, it is unlikely that any arrangements could be made to store spent fuel from DAEC at Morris except on an emergency basis.

Nuclear Fuel Services (NFS) has announced that it has withdrawn from the fuel reprocessing business. Existing contracts for the reprocessing of spent fuel are under question, and new contracts are not being offered. NFS is not even accepting fuel for storage from reprocessing customers. IE has no contract to store or reprocess DAEC fuel with NFS.

5.4.2.2 Continued

The only other existing ISFSI facility is the Allied General Nuclear Services (AGNS) reprocessing plant currently under construction. When completed, there will be insufficient fuel storage space to handle the fuel storage requirements of those utilities with contracts for AGNS fuel reprocessing. No contract exists, nor is it likely that any arrangement could be made for storing of DAEC fuel at AGNS.

Construction of a new ISFSI could be another alternative available. Such a project could take the form of single utility or joint utility venture, a new project by private industry, such as the announced plans by Exxon, expansion of the Morris or other existing facilities, and many other possibilities. However, it would not be possible to design, license, and construct such a facility in time to meet the needs at DAEC. Construction of a new off-site fuel storage facility is, therefore, not a real alternative. In addition, constructing an ISFSI would have a greater environmental impact than the proposed action. A new or expanded facility would require additional land use and constructing considerable equipment and structures, whereas installing new racks at Duane Arnold requires only the small amount of material necessary to construct the racks and the modest personnel exposure during installation.

Storage of spent fuel at an ISFSI would involve large capital costs in comparison to the proposed modifications. It is estimated that annual storage and facility investment costs would be on the order of $2,000 per year per bundle, and that transportation costs would be on the order of $4,000 per bundle. At the planned refueling rate of 88 fuel assemblies per year, shipping, storage and investment costs would be over $500,000 the first year and the amount of fuel stored would increase this by approximately $180,000 each year. These costs compare to the estimated annual cost of $360,000 for the proposed modifications.

5.4.2.3 Storage at Another Reactor Facility

Storage of spent fuel at another reactor facility would be physically possible but is not considered a realistic alternative. Most operating reactors in the United States are experiencing shortages in spent fuel storage capacity and could not efficiently provide storage space for other plants. IE does not have another nuclear power plant in its system and would have to make arrangements with another utility

5.4.2.3 Continued

to obtain any storage space which might be available. Furthermore, no current power plants are licensed to receive spent fuel from offsite. Storage of DAEC spent fuel at another reactor facility is, therefore, not considered a viable alternative.

5.4.2.4 Plant Shutdown

In the event that the high density racks are not installed within the schedule discussed in Section 5.1, the plant may have to be shut down. In the event of a shutdown, a portion of the replacement energy would be generated by existing coal and oil burning units in the IE system, and the remaining power would be purchased from other utilities. The costs associated with providing the replacement power would be $73 million for the first year. This figure is for the year 1981 and is based upon the additional cost of fuel only and assumes that energy would be available for purchase.

5.4.3 Conclusions Regarding the Proposed Modifications

The proposed modifications accomplish the design objective of providing the required storage capacity while at the same time making more efficient use of the existing facilities at DAEC and minimizing costs of capital, environmental effects, and resources committed. None of the alternatives available presently would provide the storage capacity required to support continued operation of DAEC and none result in lower overall costs. The only alternative presently available is a plant shutdown, which is economically not viable. Offsite storage alternatives, should they become available, would require relatively high capital expenditures. Environmental costs and resources committed for the proposed modifications are minimal and in general would result regardless of where the spent fuel would be stored. The proposed modifications have advantages in several areas such as land use and increased time for decay prior to shipment.

6.0 CONCLUSIONS AND SUMMARY

The safety evaluation of the proposed spent fuel storage modifications was performed to consider the consequences of modifying the storage racks to accommodate 2,050 fuel elements for the purpose of allowing continued operation of the DAEC at its licensed power level without dependence on off-site facilities.

The evaluation considered all plant features which would be affected by the modification. It was concluded that the major changes necessary were limited to storage rack replacement. Supporting systems were determined to be adequate to satisfy the FSAR requirements for the modified conditions. The evaluation confirmed the adequacy of the Spent Fuel Pool Cooling and Clean-up System, HVAC systems, and structural interfaces, which were included in the mechanical, structural, and criticality considerations. Acceptance criteria for those features which will not be modified are based on present FSAR commitments. The storage rack itself was analyzed using updated methods and evaluated in accordance with present criteria contained in applicable Regulatory Guides and NRC positions stated in the Standard Review Plan. This includes requirements established for seismic and structural analysis.

The criticality evaluation confirmed that the stored fuel would remain substantially subcritical (Keff $<$ 0.95) with a full-loaded assembly conservatively assuming loading of non-depleted fuel. This condition is met for nominal configuration, worst-case clustering due to gaps and fabrication tolerances, and postulated fuel-drop locations.

Mechanical evaluation confirmed acceptability of supporting cooling systems and structural evaluation verified that the rack could withstand the design bases loading combinations. Interface loads transmitted to the fuel pool are within the load carrying capability of the structure. The structural evaluation included a seismic analysis equivalent to a three-dimensional excitation using methods which conform to Regulatory Guides 1.60 and 1.61.

The radiological impact and other environmental impacts were thoroughly evaluated. The one-time dose during rack replacement is reasonably low with respect to other plant activities. All other impacts are insignificant.

6.0 Continued

A cost-benefit evaluation supports the proposed modification. The only alternative presently available is a plant shutdown which is economically not a viable alternative. Off-site storage is currently not available, and were it to become available, it would be more costly with no compensating benefit from either a safety or environmental aspect.

Table 3-1

MATERIAL SPECIFICATION FOR MATERIALS UTILIZED

Material Spec.	Description	Alloy	Finish	F_Y Min. Yield at 212° F
ASTM-B26-76	Top & Bottom Casting	A356-T51 Sand Cst.	Partial machined, sand-blasted and Duronodic (grey) (anodized)	16,000 psi
ASTM-B209-76	1/2" Side Panels	6061-T6	Duronodic Anodize (black)	32,000 psi
ASTM-B209-76	Angle Connectors	6061-T4	Duronodic Anodize (black)	32,000 psi
ASTM-B209-76	Can Weldments	5052-H32	Sulfuric Anodize (clear)	23,000 psi
ASTM-A211-75	Bolts and Dowel Pins	2024-T4	Sulfuric Anodize (black)	42,000 psi
MIL-R-24243	Rivets	5052 Body 7178 Mandrel	Sulfuric Anodize (blk)	
	ABS Plastic	Cycolac Grade T		
ASTM-A276-76	Bearing Plate on foot	304 Stainless	Machined	25,000 psi
ASTM-A211-75	Leveling Screw	6061-T6	Hard Anodized (black)	35,000 psi

Table 4-1

PLANNED FUEL DISCHARGE SCHEDULE AND EXPOSURE

Year	1975	1976	1977	1978	1979	1980	1981 & each Succeeding Year
No. of Bundles Discharged	4	84	100	88	88	88	88
Average Exposure (MWD/MTU)	3300	8000	15800	19300	18800	25400	27600

Table 4-2

LOADING COMBINATIONS AND FACTORED ALLOWABLES

Load Combinations	Factored Allowable
D+L	S
D+L+E	S
D+L+To	1.5S
D+L+To+E	1.5S
D+L+Ta+E	1.6S
D+L+DF	1.6S
D+L+Ta+E[1]	2.0S

S = Normal allowable stresses according to paragraph 4.3.2.

D = Dead load, buoyant rack weight

L = Live load, buoyant fuel weight

To = Operating thermal loads

Ta = Accident thermal loads

E = OBE Seismic loads including impact of fuel and modules

E[1] = SSE Seismic loads including impact of fuel and modules

DF = Dropped fuel bundle loads

Table 4-3

STATIC LOADS FOR ACCIDENT CONDITIONS

Condition	Description	Load
1	18" drop, corner of rack	58.2 Kips
2	18" drop, middle of rack	49.2 Kips
3	Drop through empty cavity of rack	66.5 Kips
4	Jammed fuel bundle uplift	4.0 Kips*

*The maximum uplift load due to a jammed fuel bundle is limited by the capacity of the crane.

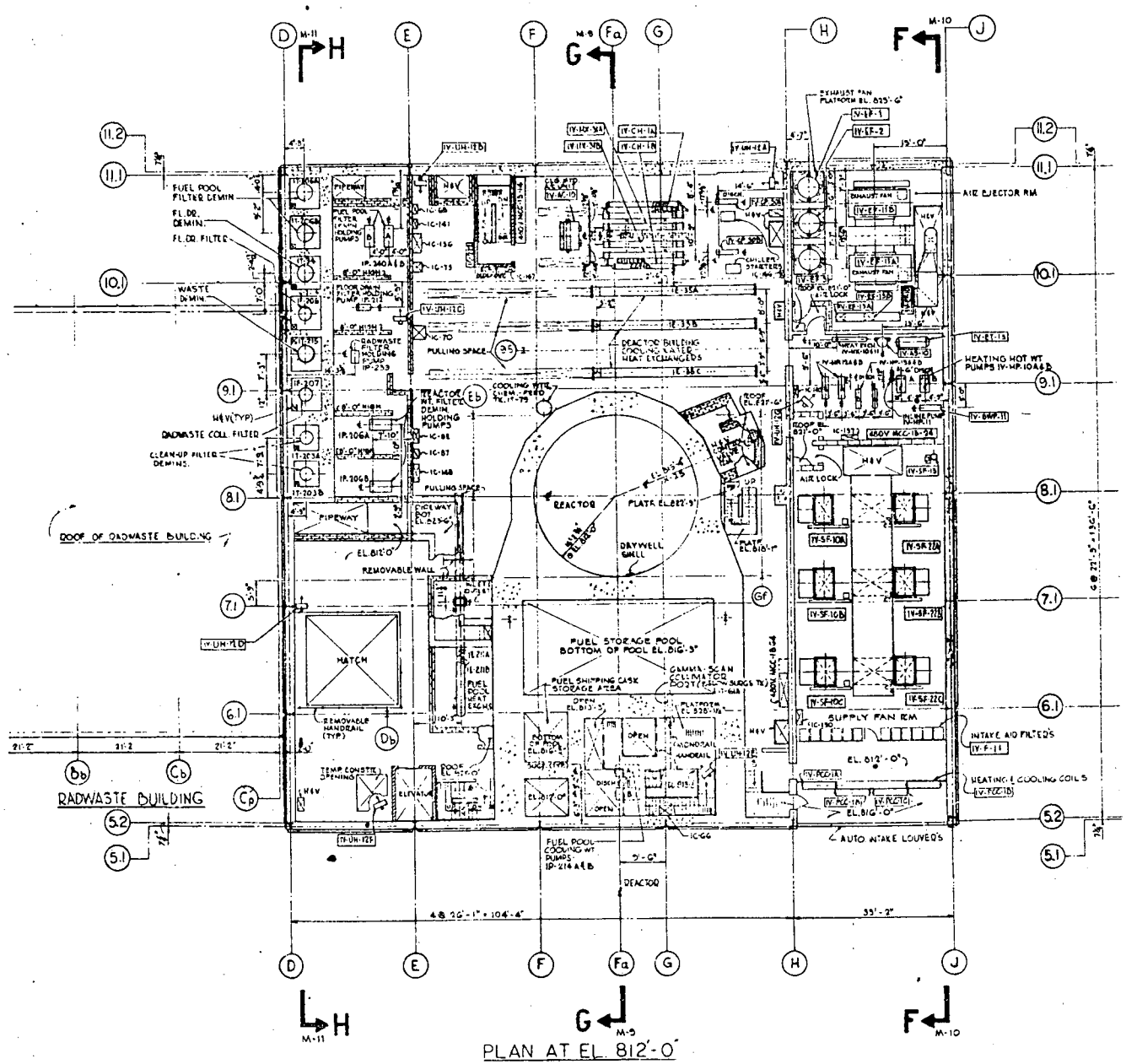
RADWASTE BUILDING
PLAN AT EL. 812'-0"
REACTOR
DRYWELL SHELL
FUEL STORAGE POOL
BOTTOM OF POOL EL. 816'-3"
FUEL SHIPPING CASK STORAGE AREA
HATCH
REMOVABLE WALL
ROOF OF RADWASTE BUILDING
PIPEWAY
PULLING SPACE
REACTOR BUILDING COOLING WATER HEAT EXCHANGERS
SUPPLY FAN RM
AIR EJECTOR RM
AIR LOCK
INTAKE AIR FILTERS
HEATING & COOLING COILS
AUTO INTAKE LOUVERS
HEATING HOT WT PUMPS
FUEL POOL FILTER DEMIN
FL. DR. DEMIN.
FL. DR. FILTER
WASTE DEMIN.
RADWASTE COLL. FILTER
CLEAN-UP FILTER DEMINS.
FUEL POOL COOLING WT PUMPS IP-214 A&B
REACTOR

Figure 3-1

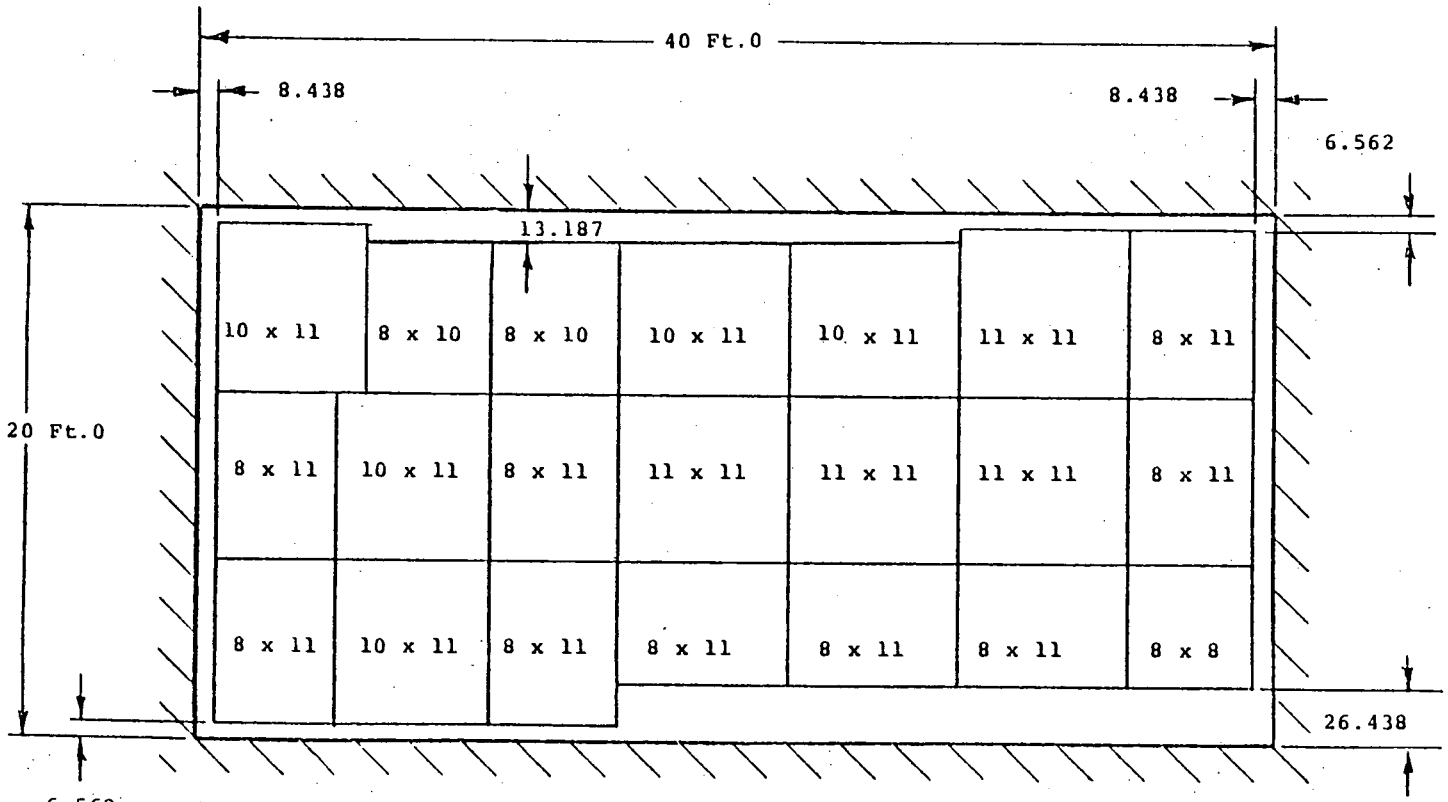

Qty.	Mod.	Cav.
1	8 x 8	64
2	8 x 10	160
9	8 x 11	792
5	10 x 11	550
4	11 x 11	484
21		2050 Total Cavities

Figure 3-2

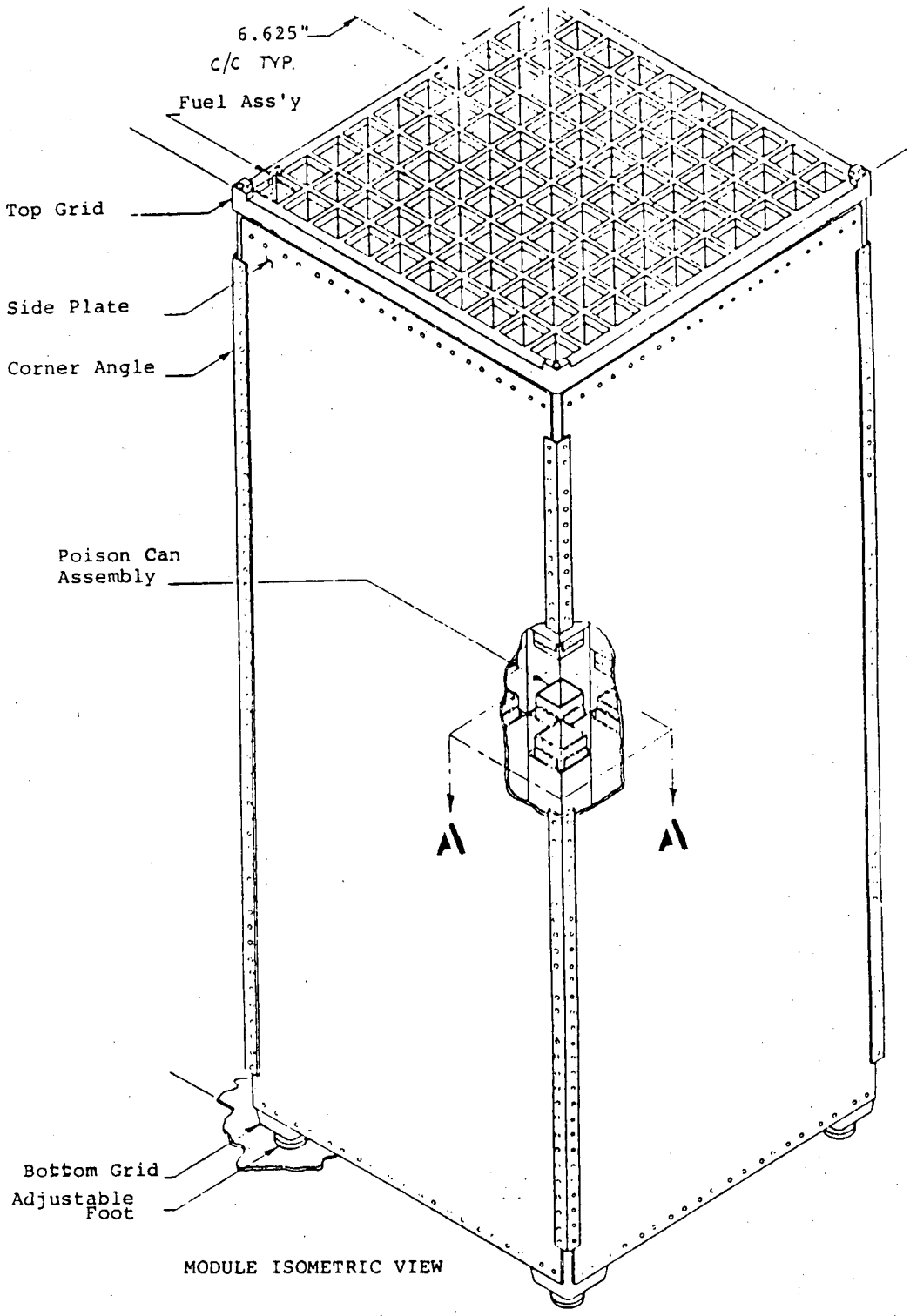

MODULE ISOMETRIC VIEW

Figure 3-3

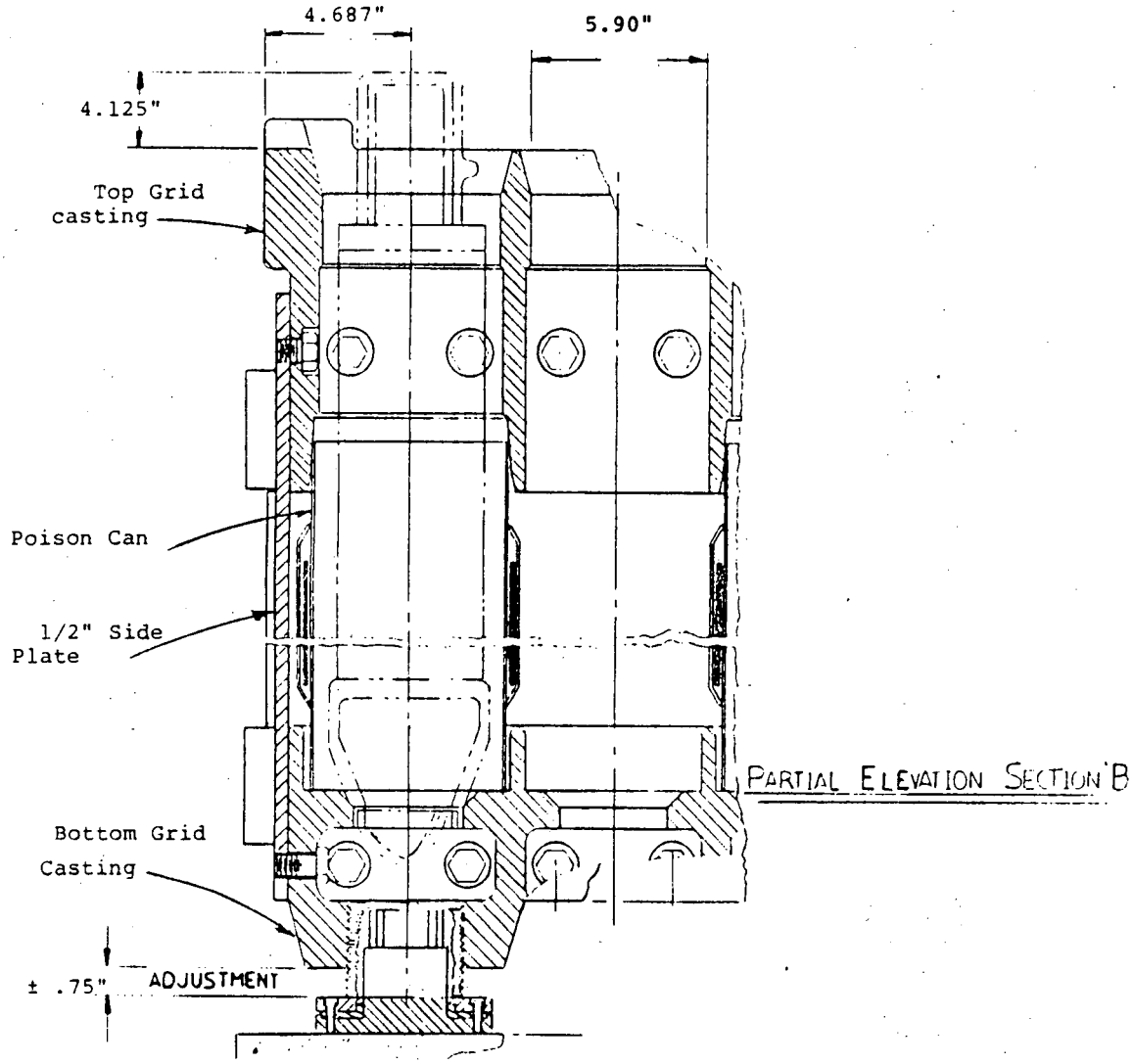
4.687"
5.90"
4.125"
Top Grid casting
Poison Can
1/2" Side Plate
Bottom Grid Casting
± .75"
ADJUSTMENT
PARTIAL ELEVATION SECTION B

Figure 3-4

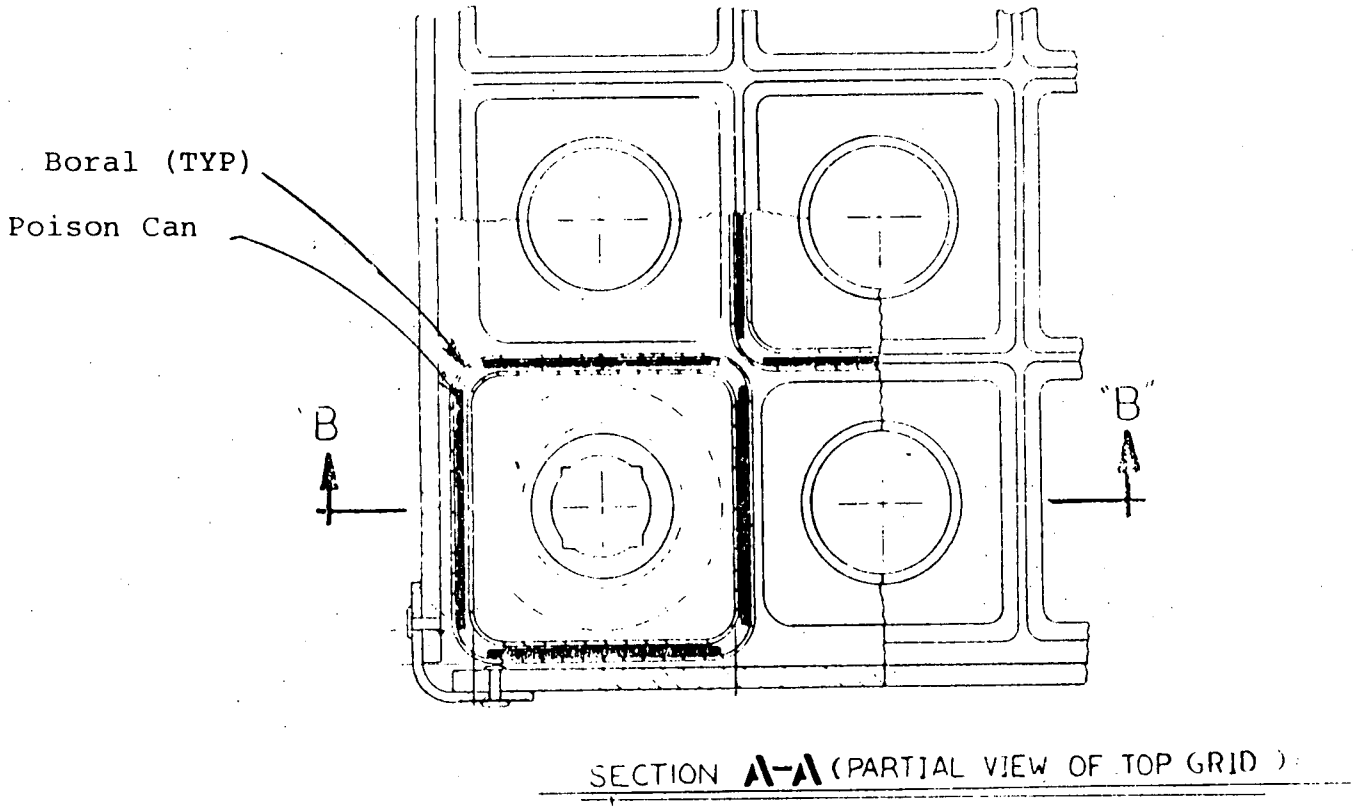

Figure 3-5

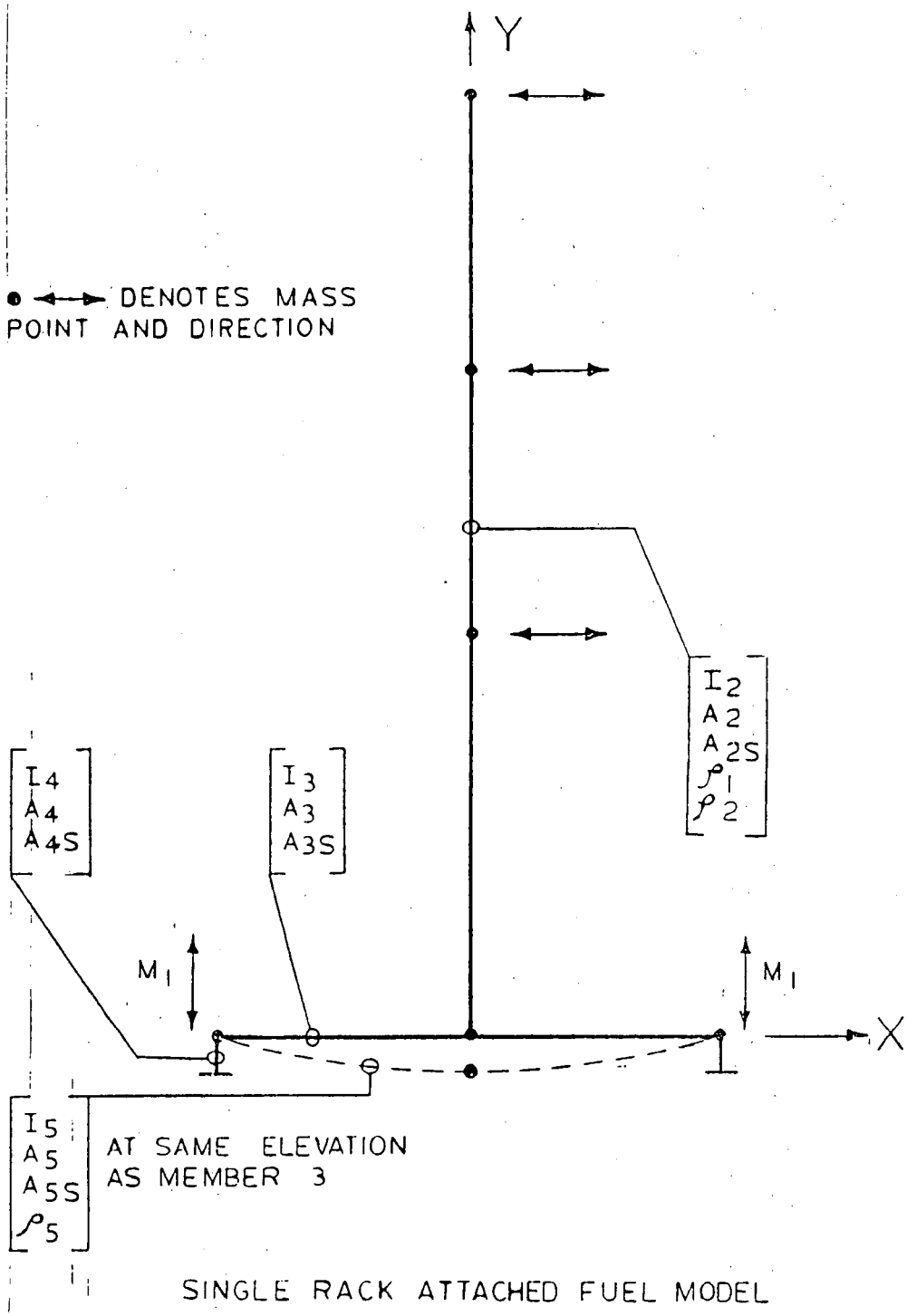

SINGLE RACK ATTACHED FUEL MODEL

Figure 4-1

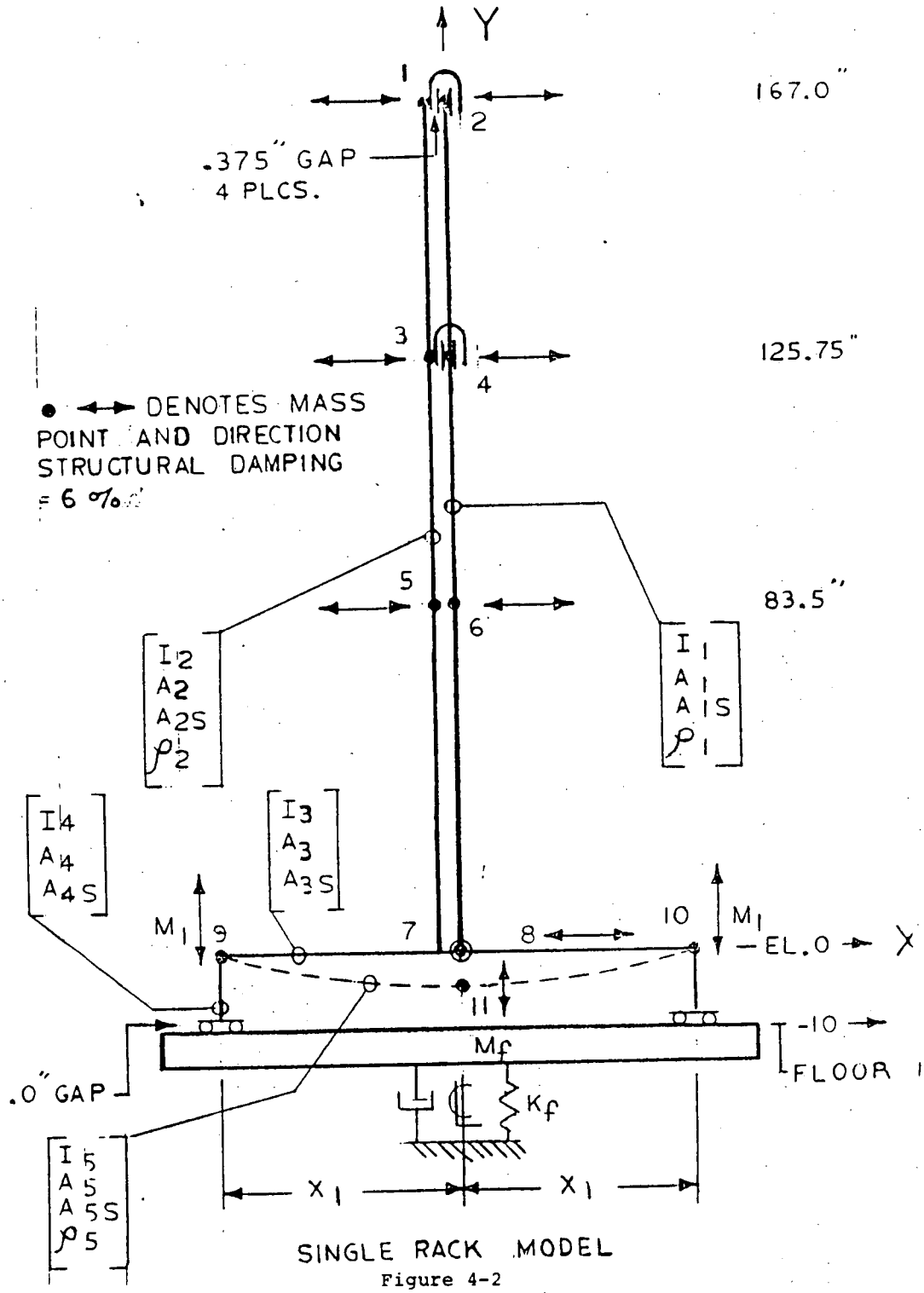

SINGLE RACK MODEL
Figure 4-2

● ←→ DENOTES MASS POINT AND DIRECTION
STRUCTURAL DAMPING = 6 %

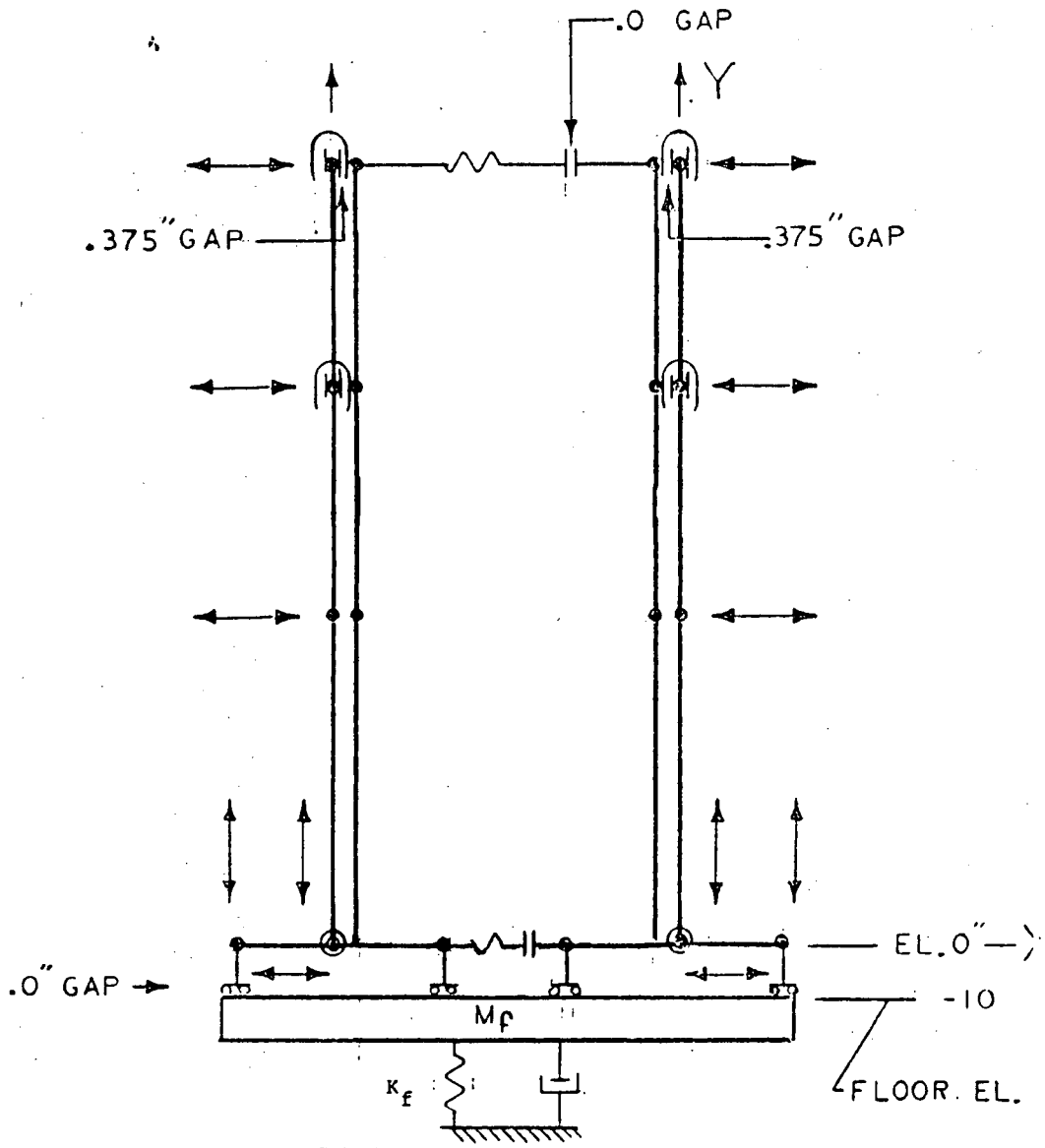

DOUBLE RACK MODEL

Figure 4-3

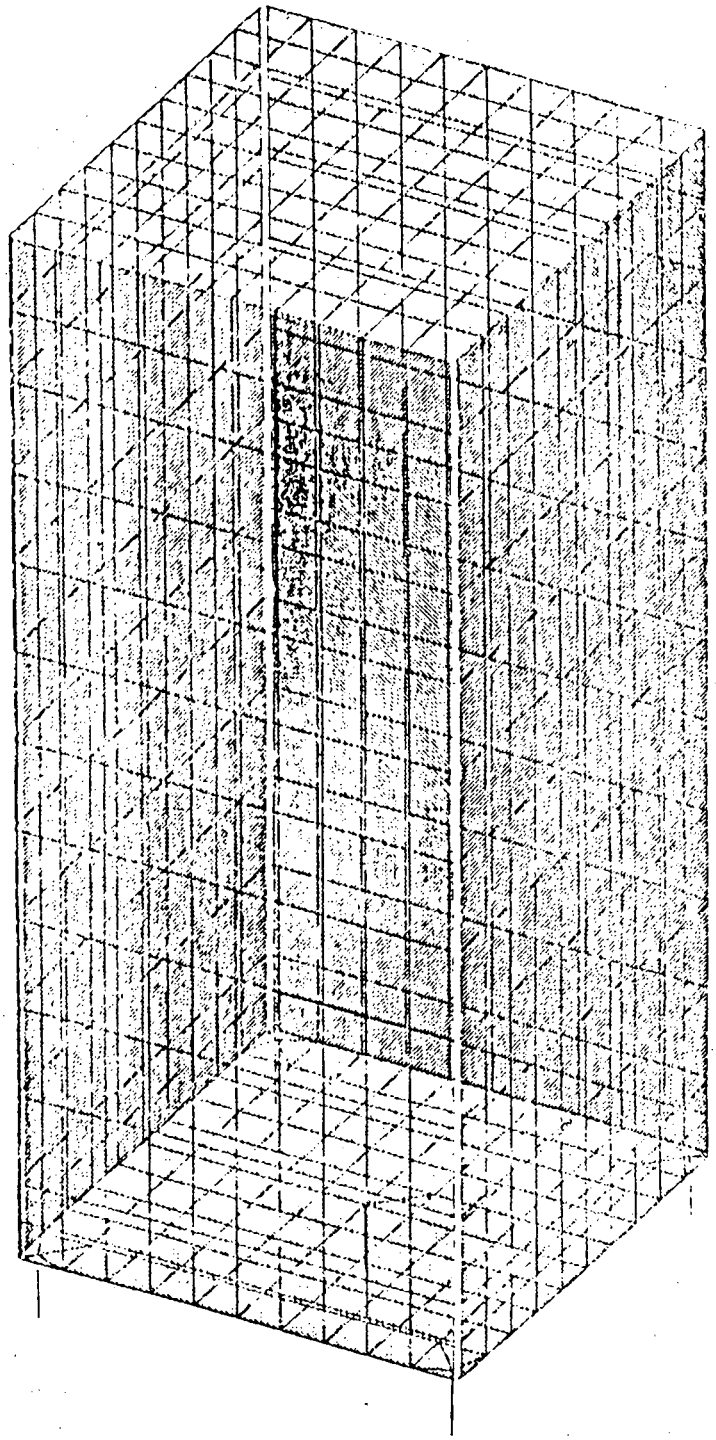

FINITE ELEMENT MODEL

Figure 4-4