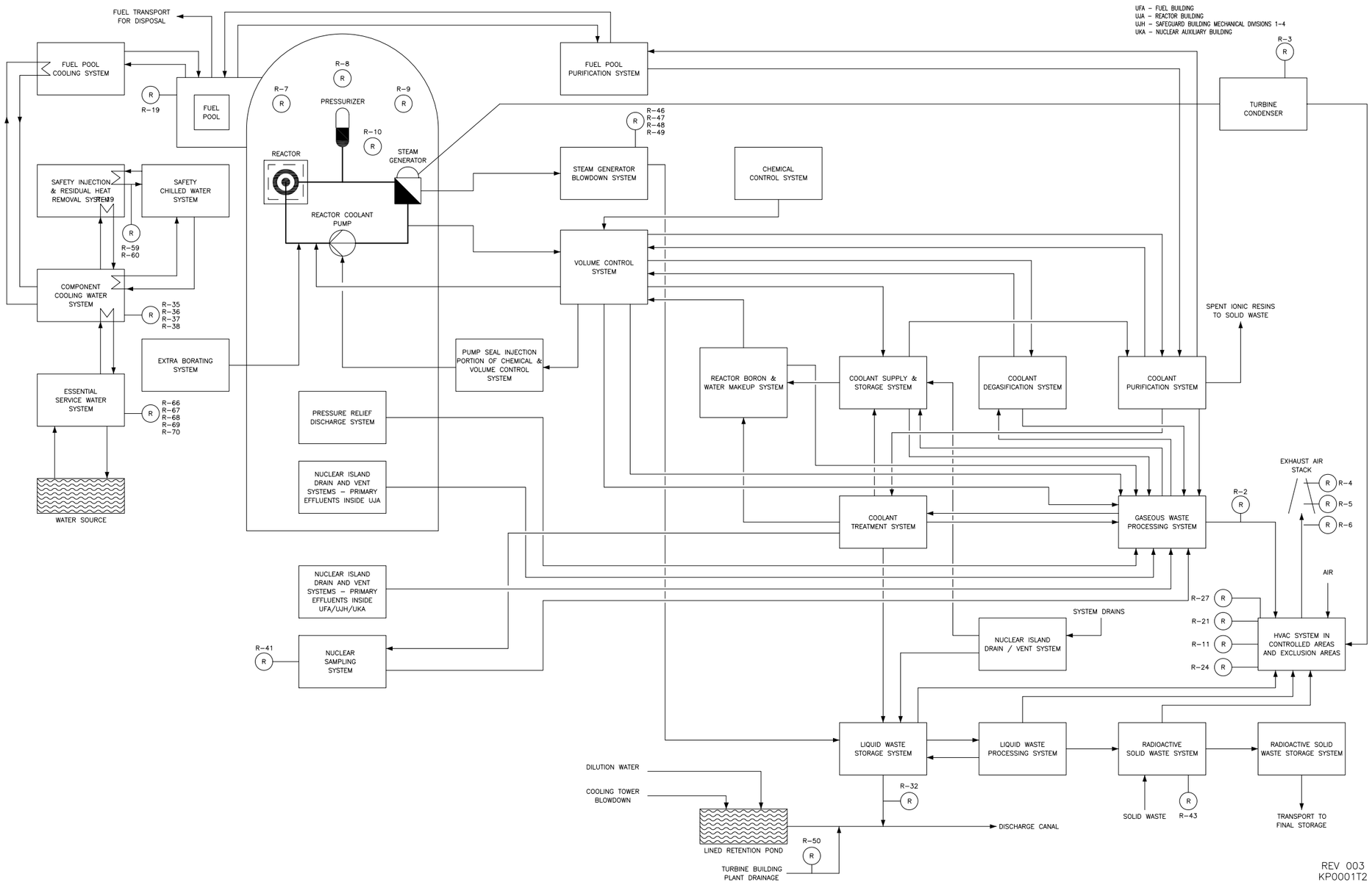Figure 11.5-1—Radioactive Effluent Flow Paths With Process and Effluent Radiation Monitors