Figure 11.4-1—Solid Waste Management Flow Diagram

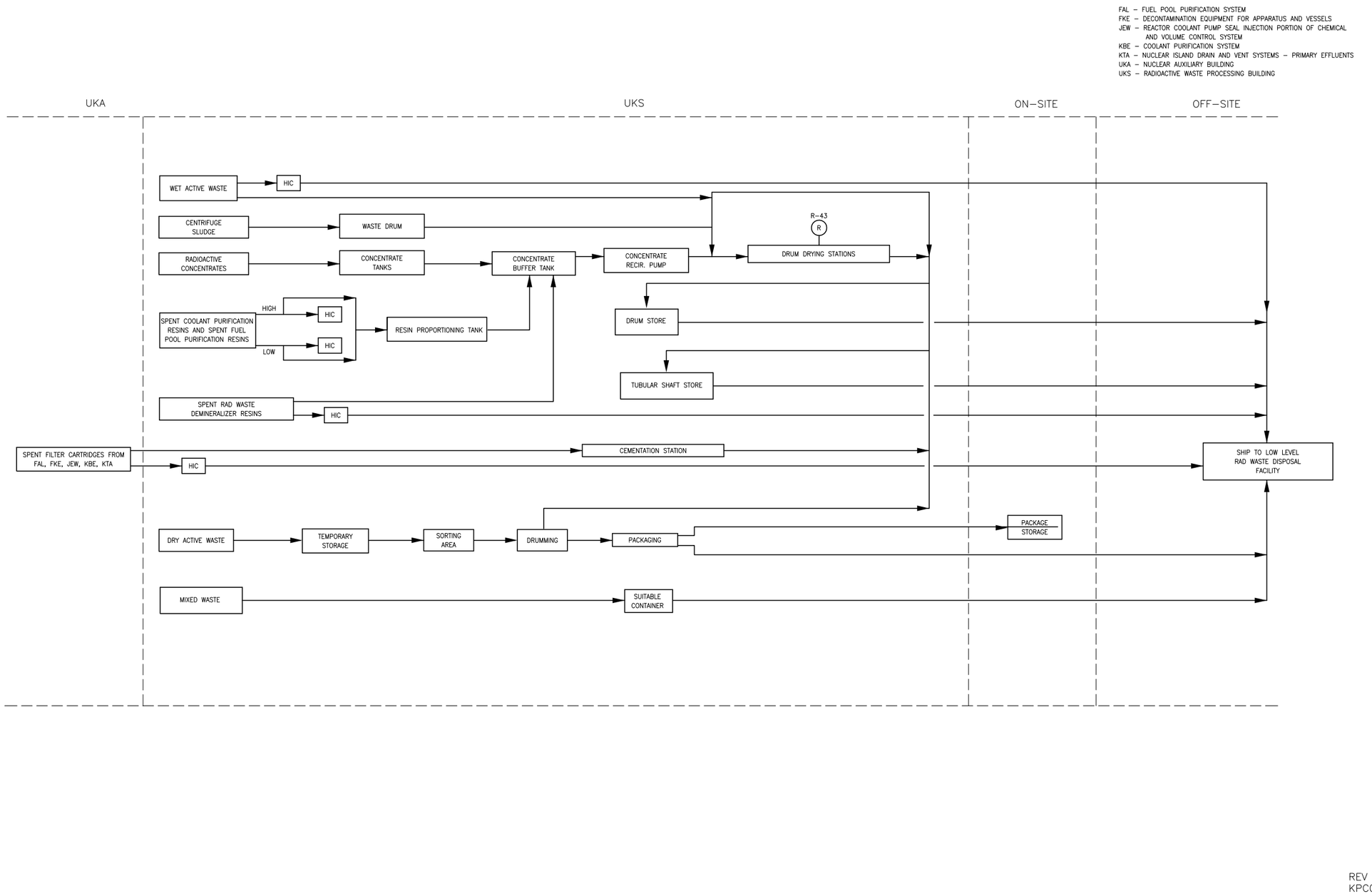

REV 003
KPC01T2

Figure 11.4-2—Radioactive Concentrates Processing System

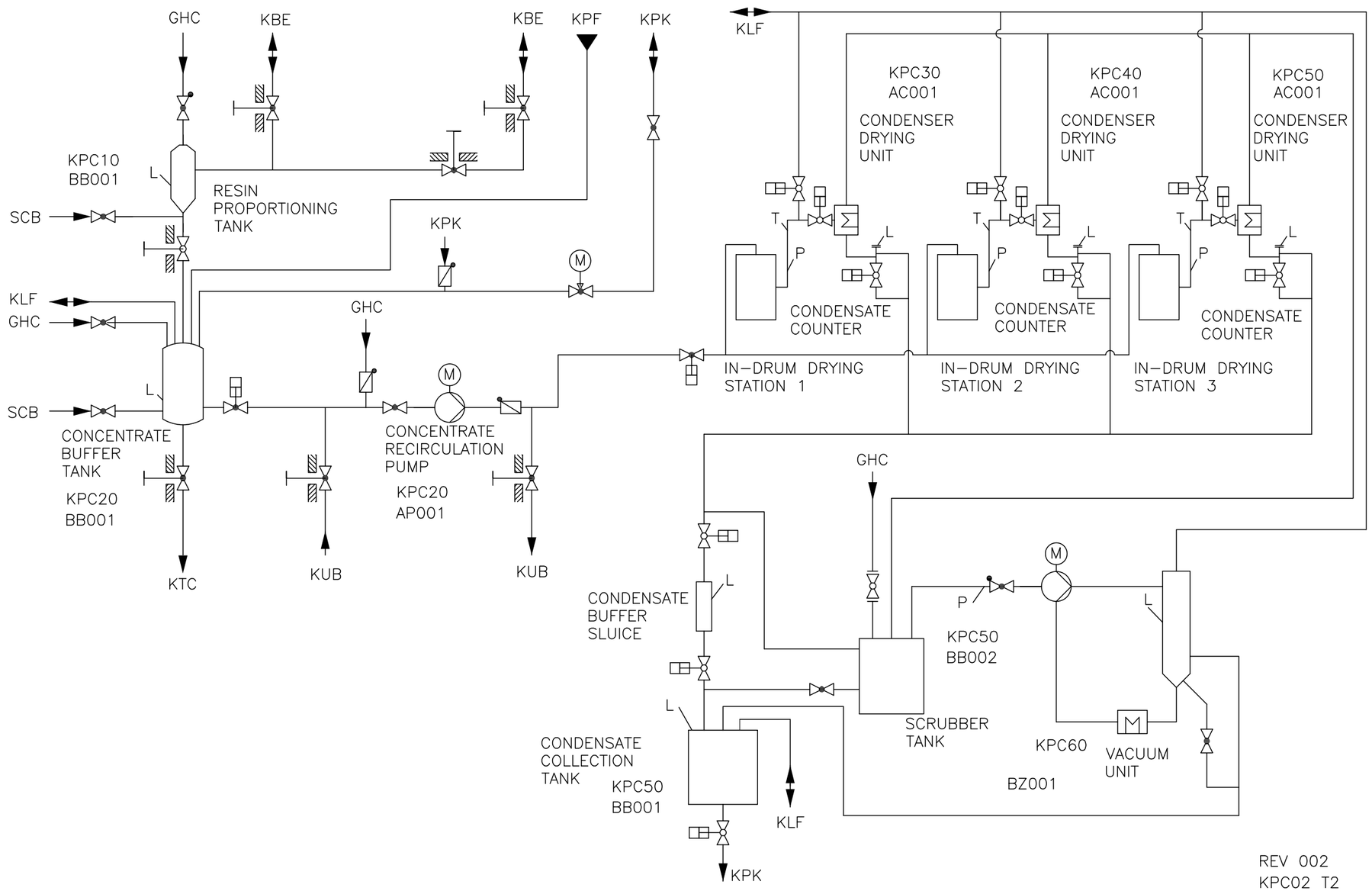

Next File