Figure 8.3-1—Electrical Single Line Drawing Legend

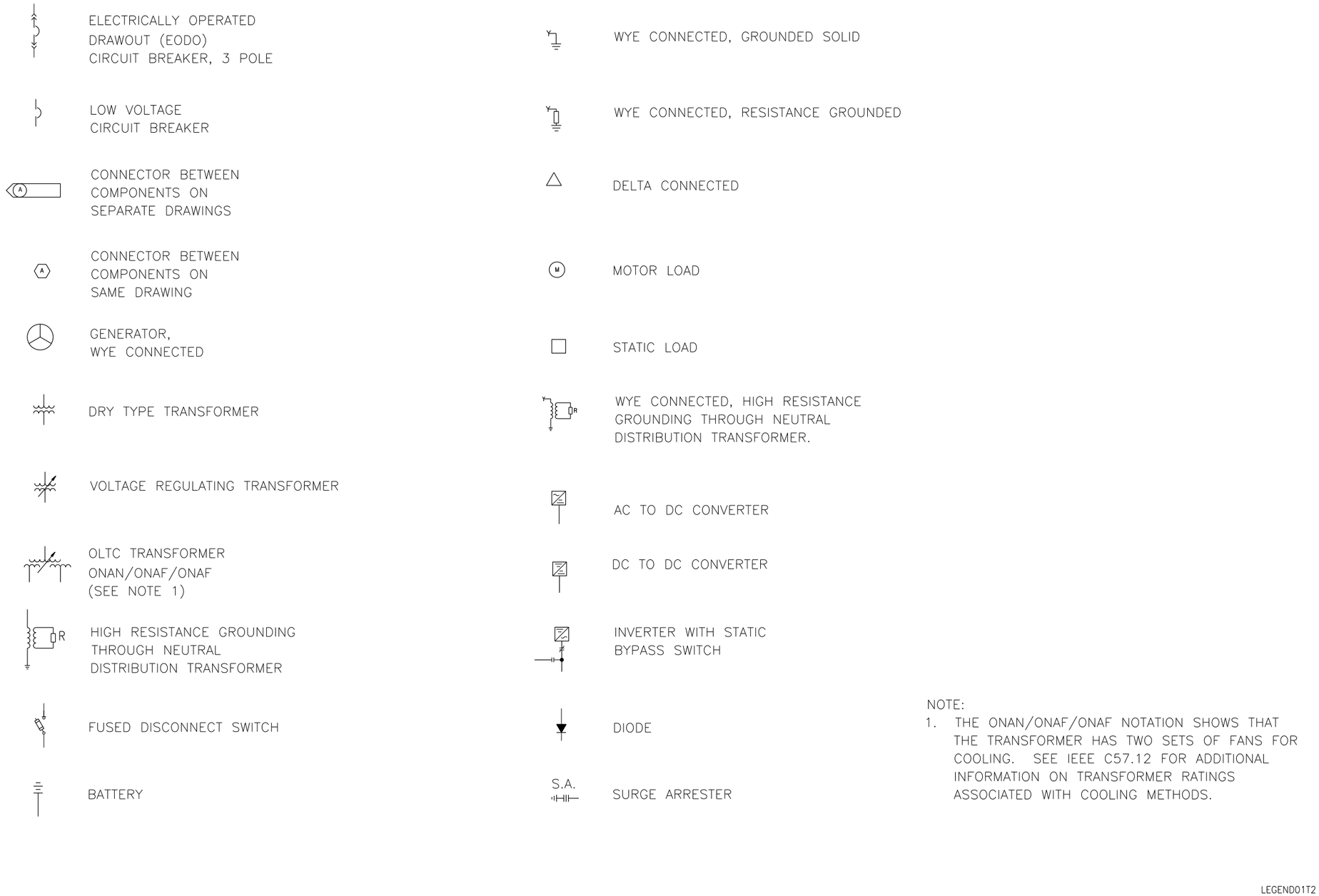

Figure 8.3-2—Emergency Power Supply System Single Line Drawing
Sheet 1 of 3

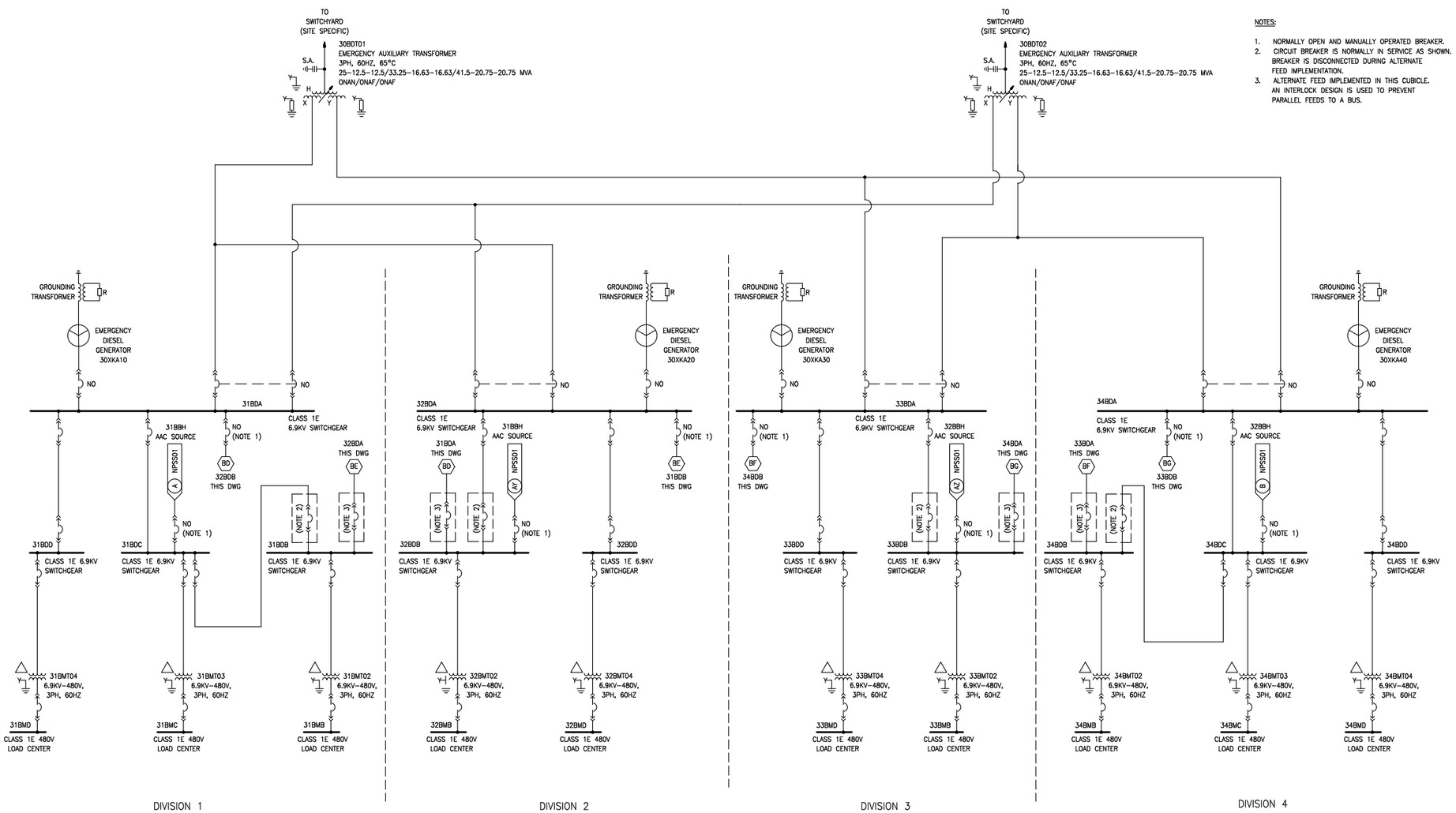

REV 002
EPSS01T2

Figure 8.3-2—Emergency Power Supply System Single Line Drawing
Sheet 2 of 3

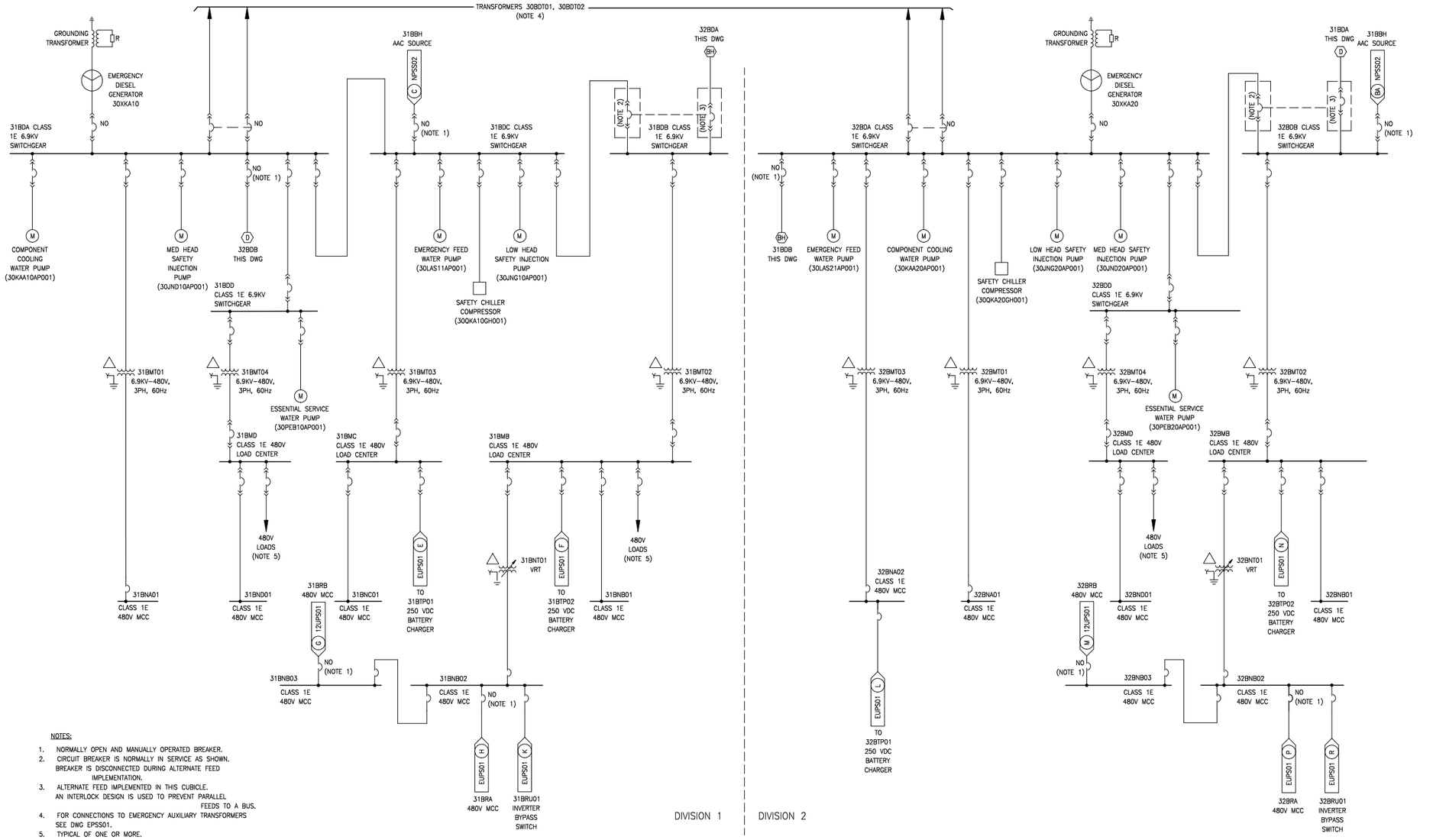

Figure 8.3-2—Emergency Power Supply System Single Line Drawing
Sheet 3 of 3

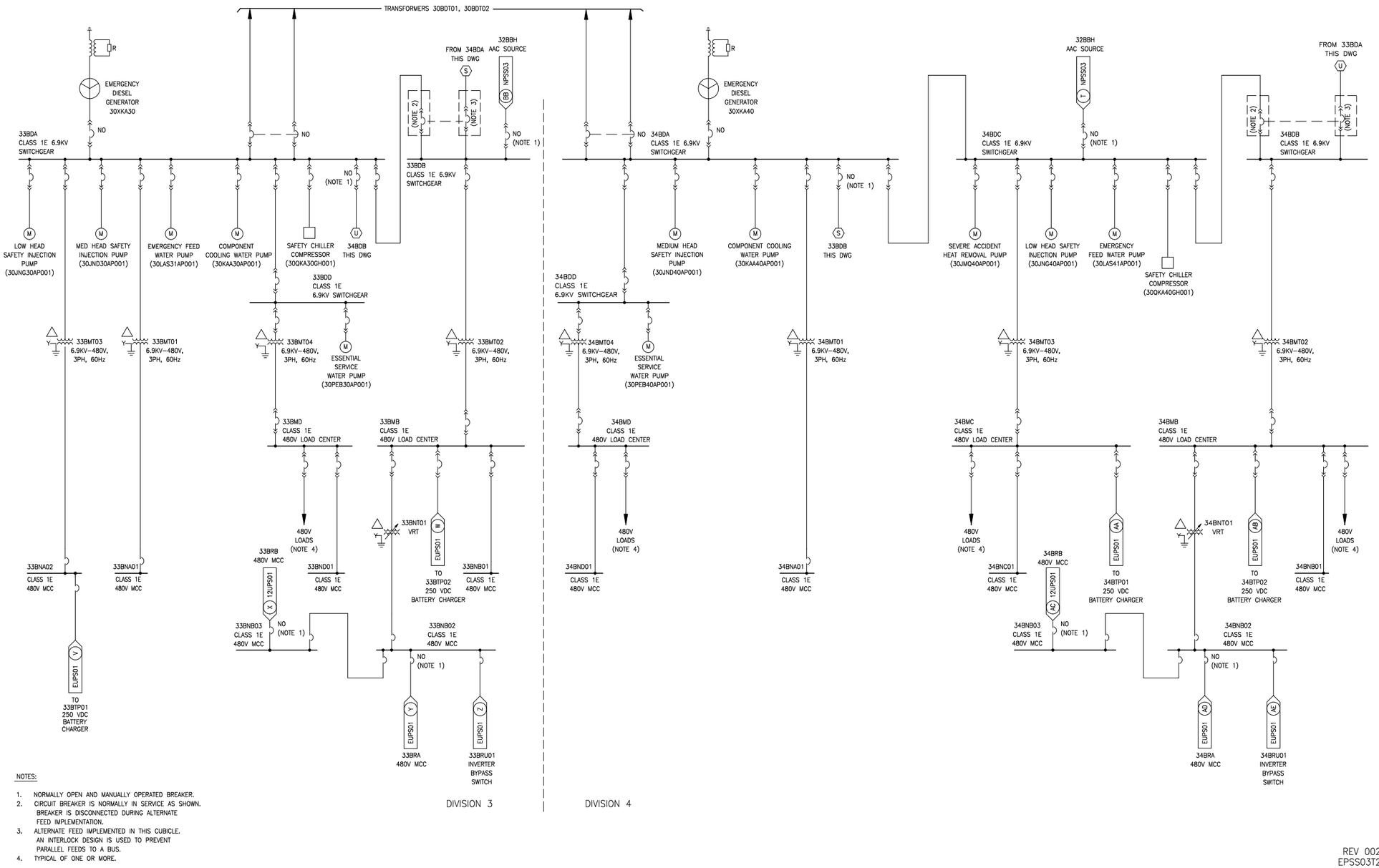

NOTES:

1. NORMALLY OPEN AND MANUALLY OPERATED BREAKER.
2. CIRCUIT BREAKER IS NORMALLY IN SERVICE AS SHOWN. BREAKER IS DISCONNECTED DURING ALTERNATE FEED IMPLEMENTATION.
3. ALTERNATE FEED IMPLEMENTED IN THIS CUBICLE. AN INTERLOCK DESIGN IS USED TO PREVENT PARALLEL FEEDS TO A BUS.
4. TYPICAL OF ONE OR MORE.

Figure 8.3-3—Normal Power Supply System Single Line Drawing
Sheet 1 of 5

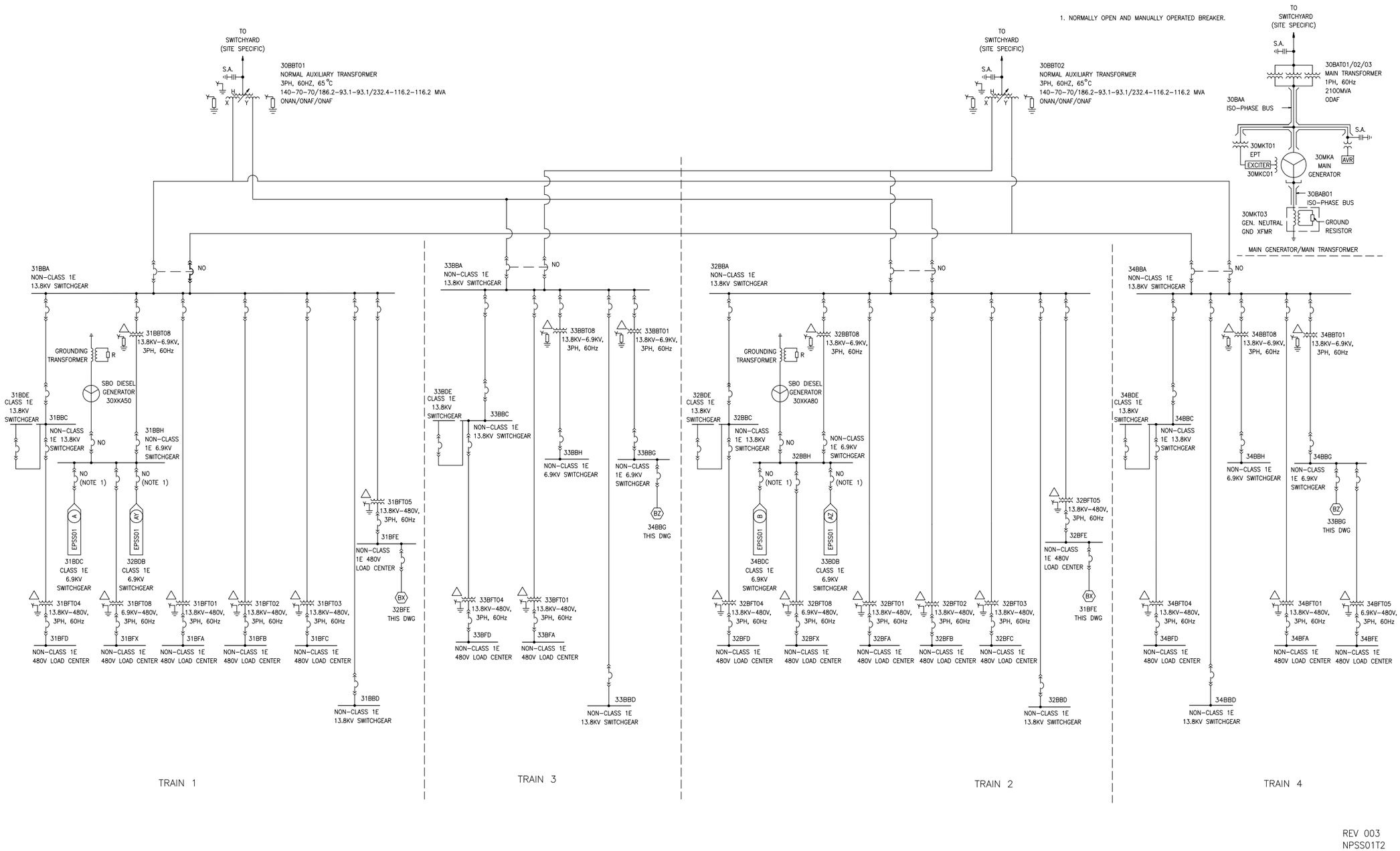

Figure 8.3-3—Normal Power Supply System Single Line Drawing
Sheet 2 of 5

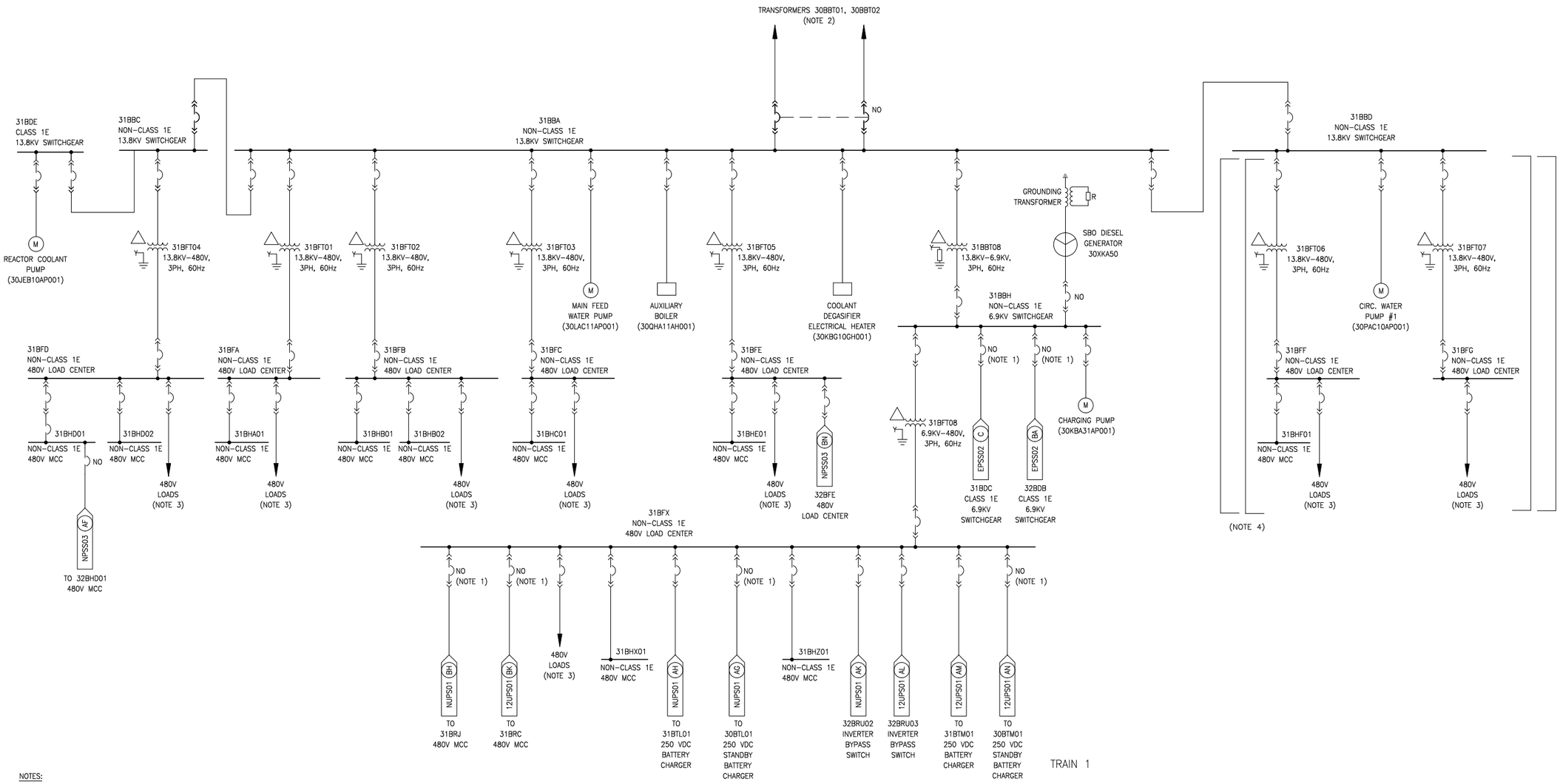

NOTES:

1. NORMALLY OPEN AND MANUALLY OPERATED BREAKER.
2. FOR CONNECTIONS TO NORMAL AUXILIARY TRANSFORMERS SEE DWG NPSS01.
3. TYPICAL OF ONE OR MORE.
4. ELECTRICAL DISTRIBUTION TO CIRCULATING WATER SUPPLY SYSTEM OUTSIDE THE TURBINE BUILDING IS CONCEPTUAL DESIGN INFORMATION.

REV 002
NPSS02T2

Figure 8.3-3—Normal Power Supply System Single Line Drawing
Sheet 3 of 5

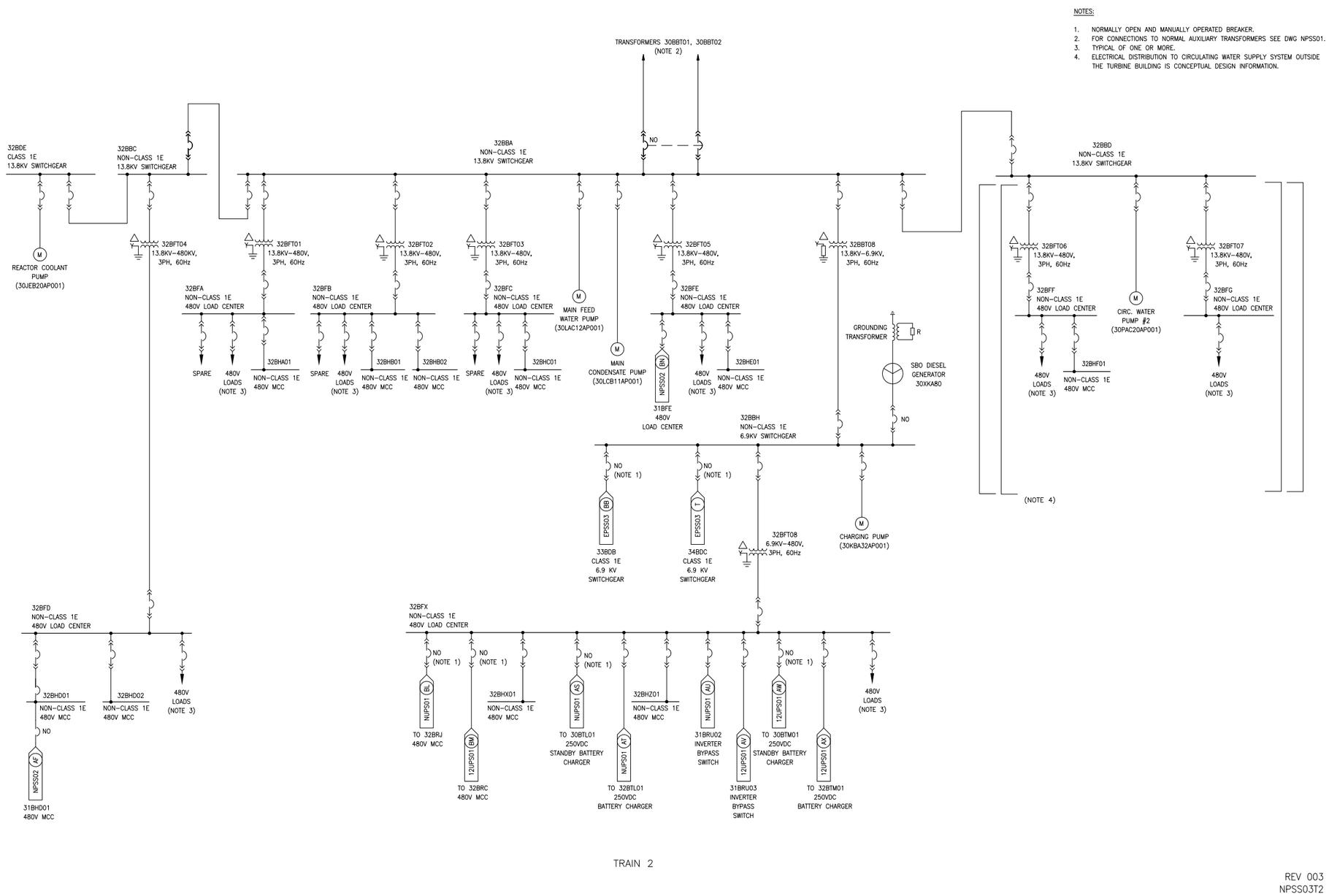

Figure 8.3-3—Normal Power Supply System Single Line Drawing
Sheet 4 of 5

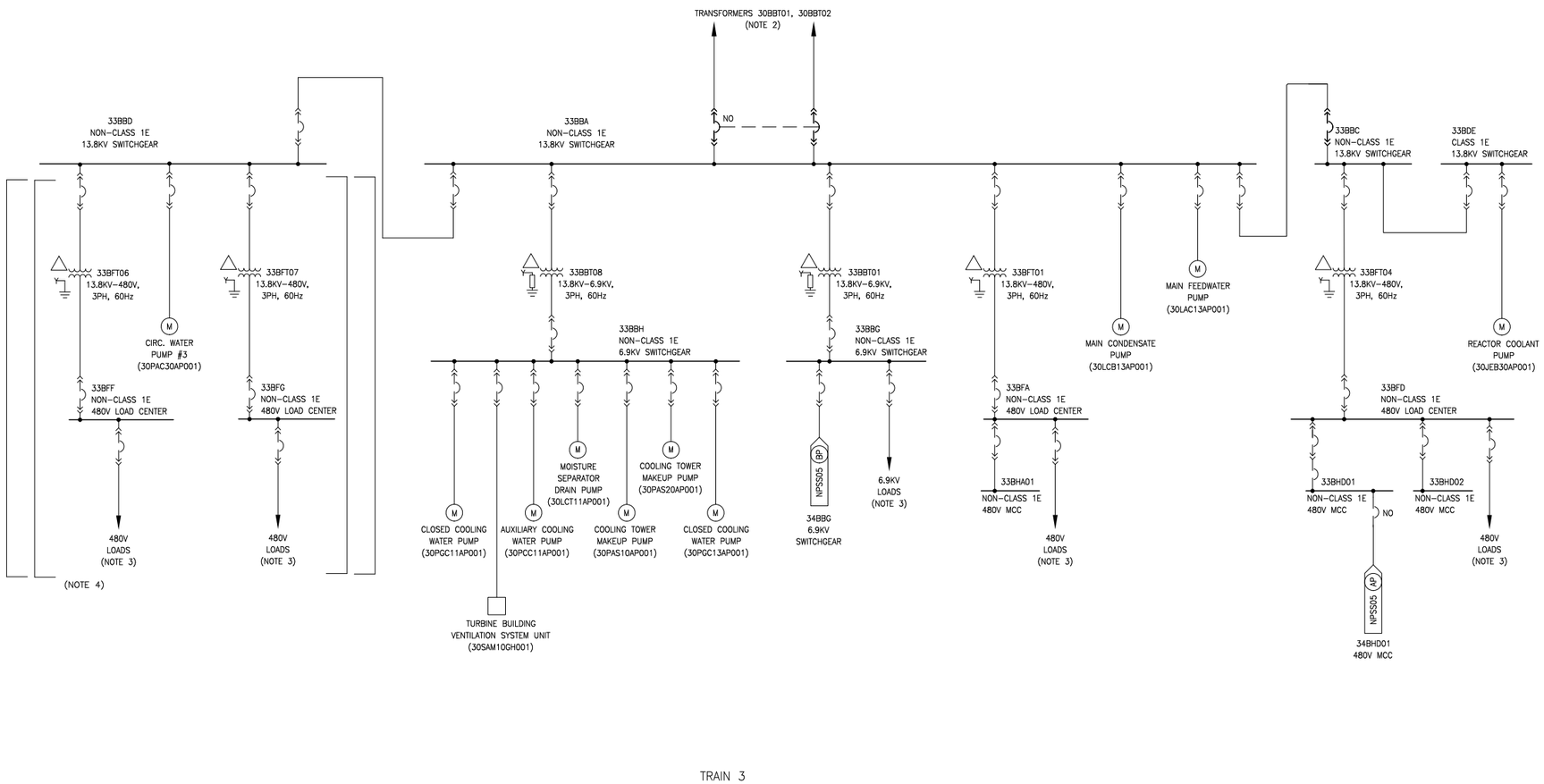

NOTES:

1. NORMALLY OPEN AND MANUALLY OPERATED BREAKER.
2. FOR CONNECTIONS TO NORMAL AUXILIARY TRANSFORMERS SEE DWG NPSS01.
3. TYPICAL OF ONE OR MORE.
4. ELECTRICAL DISTRIBUTION TO CIRCULATING WATER SUPPLY SYSTEM OUTSIDE THE TURBINE BUILDING IS CONCEPTUAL DESIGN INFORMATION.

REV 002
NPSS04T2

Figure 8.3-3—Normal Power Supply System Single Line Drawing
Sheet 5 of 5

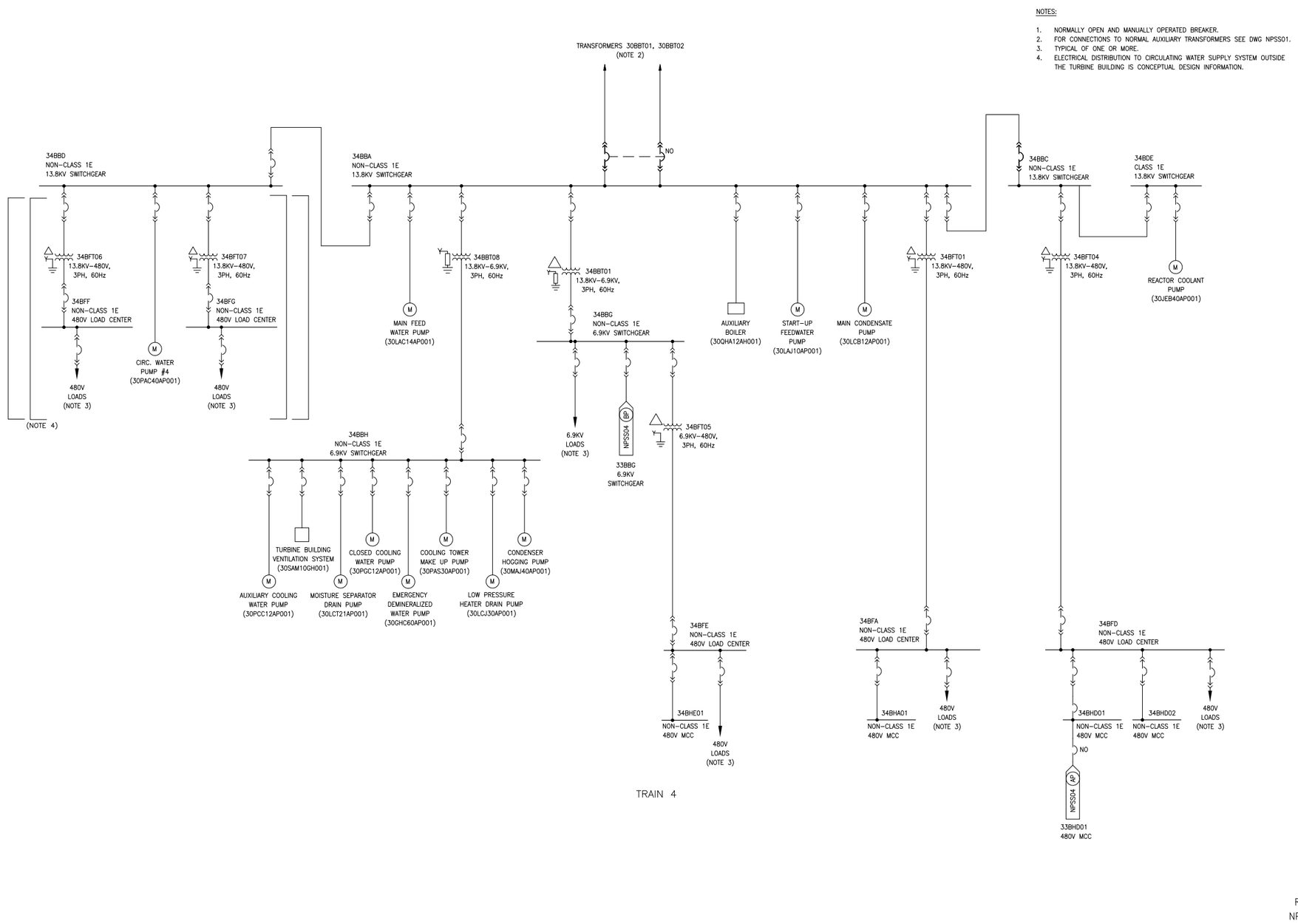

Figure 8.3-4—[[Typical Station Grounding Grid]]

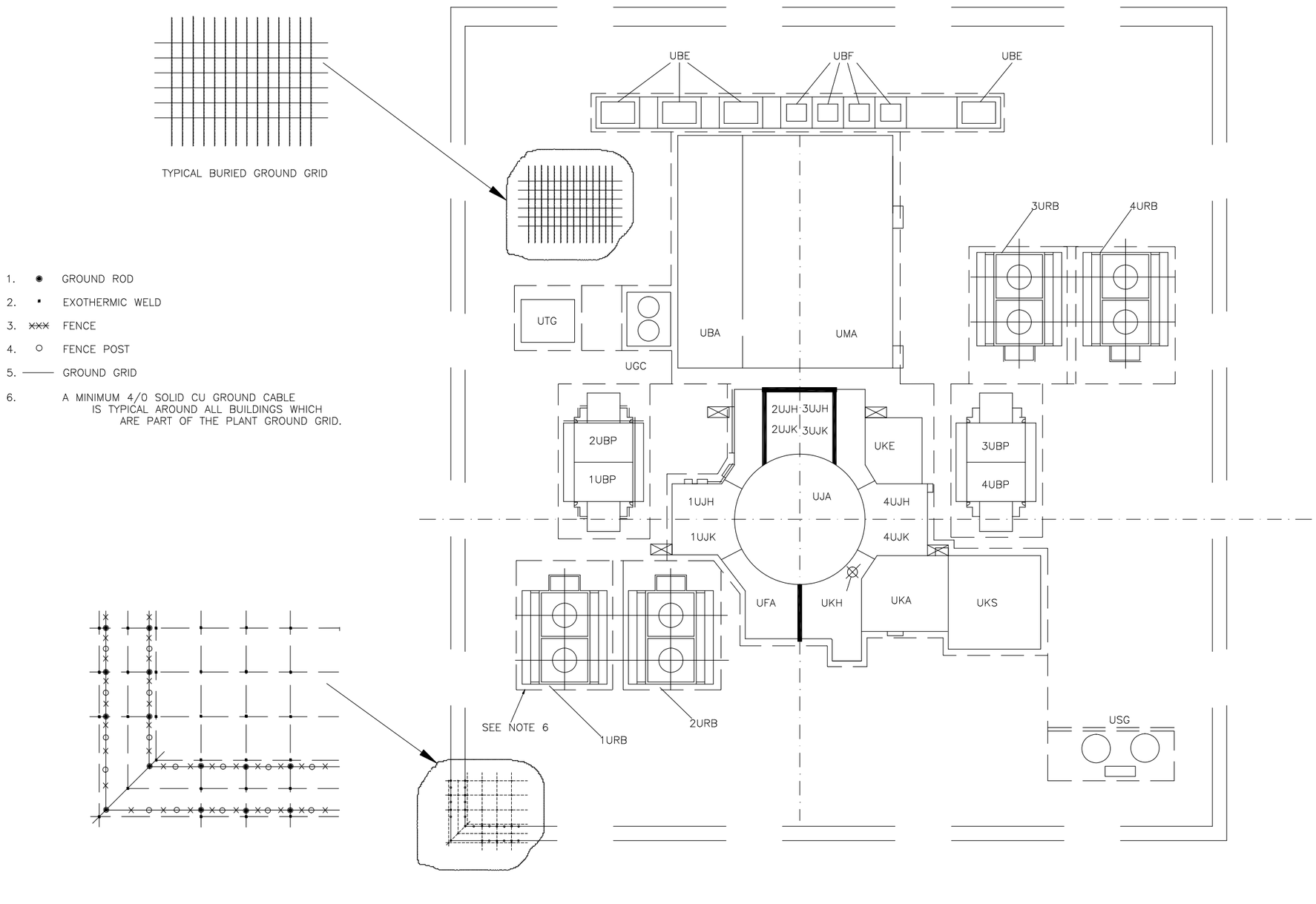

Figure 8.3-5—Class 1E Uninterruptible Power Supply System Single Line Drawing

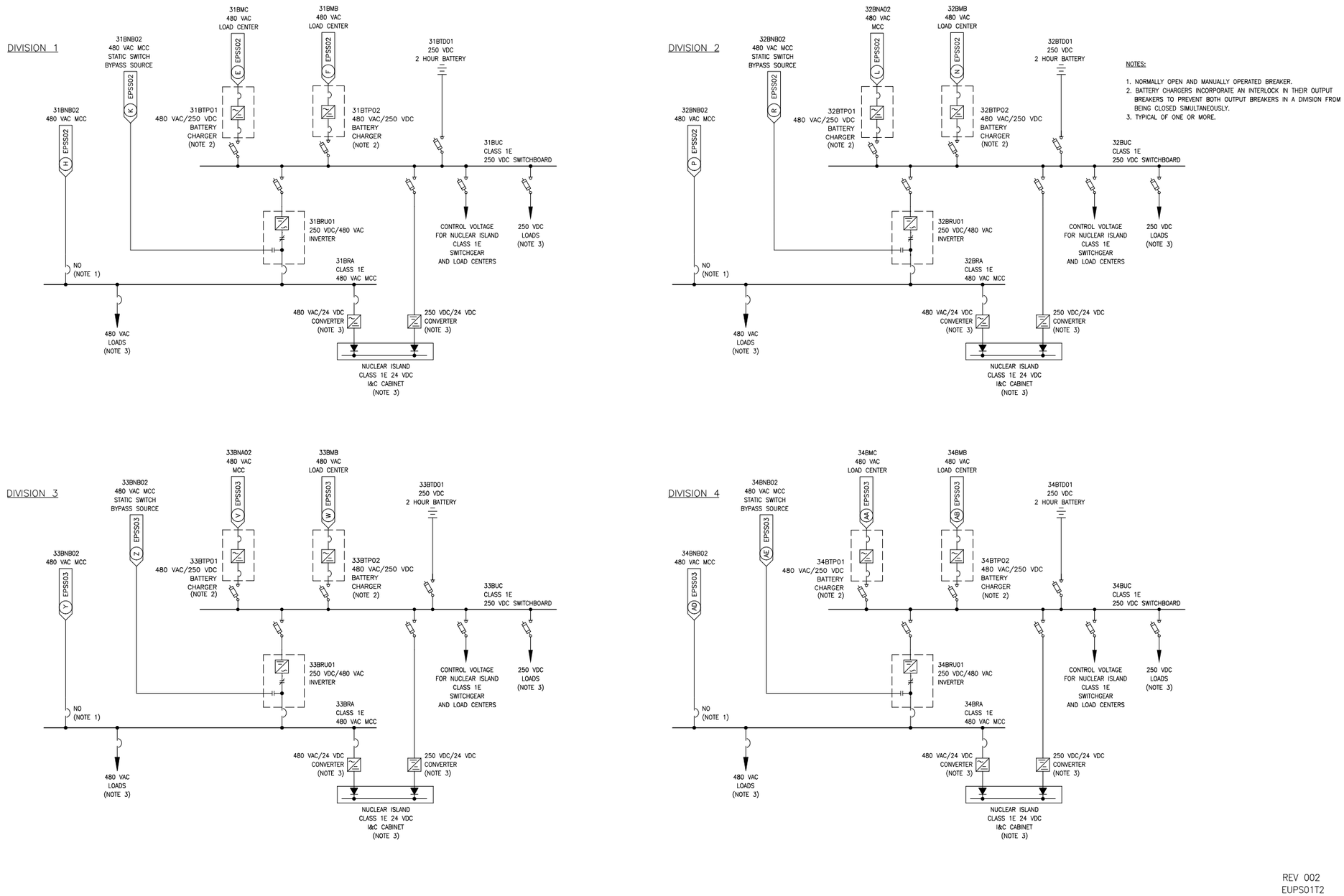

Figure 8.3-6—12-Hour Uninterruptible Power Supply System Single Line Drawing

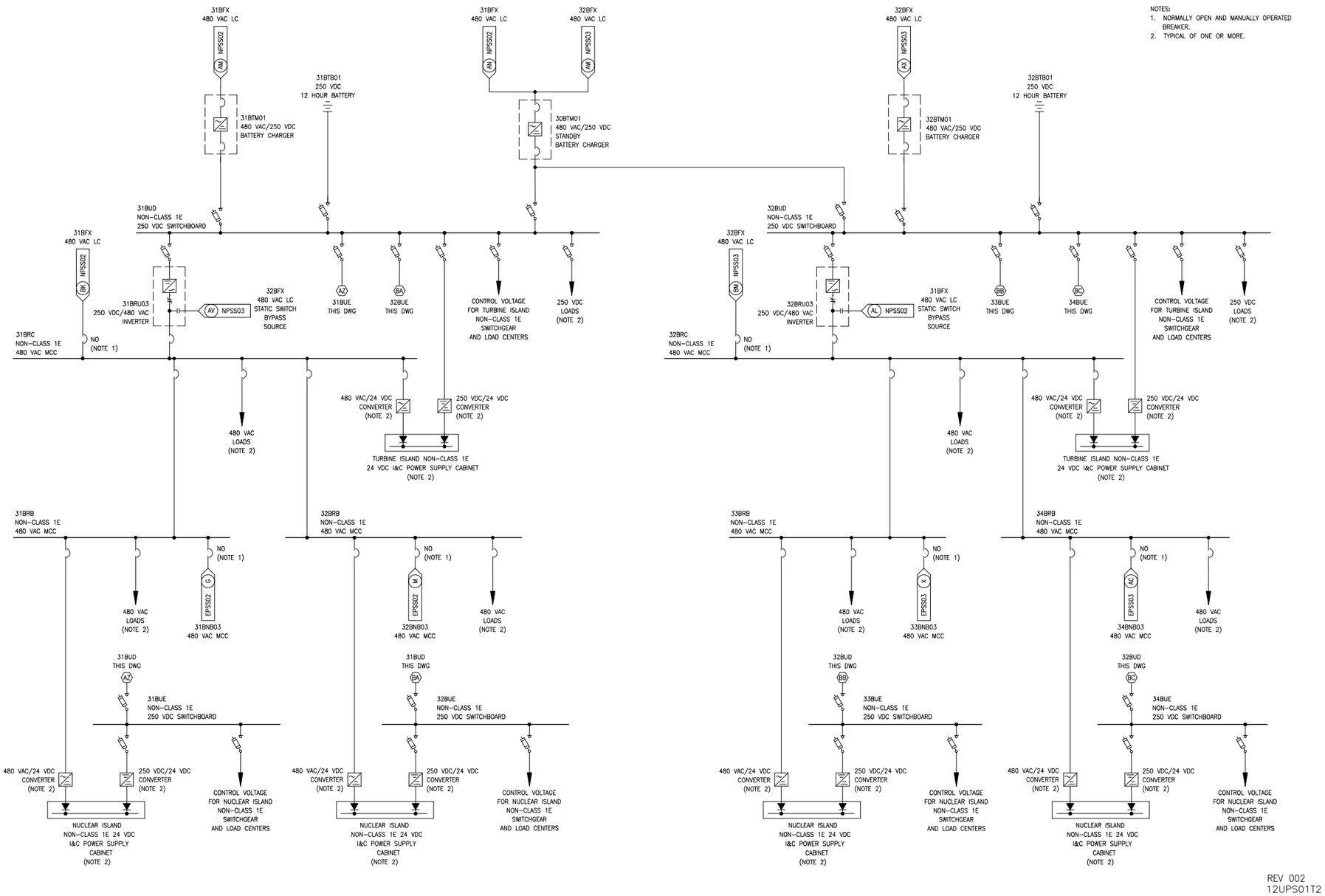

Figure 8.3-7—Non-Class 1E Uninterruptible Power Supply System Single Line Drawing

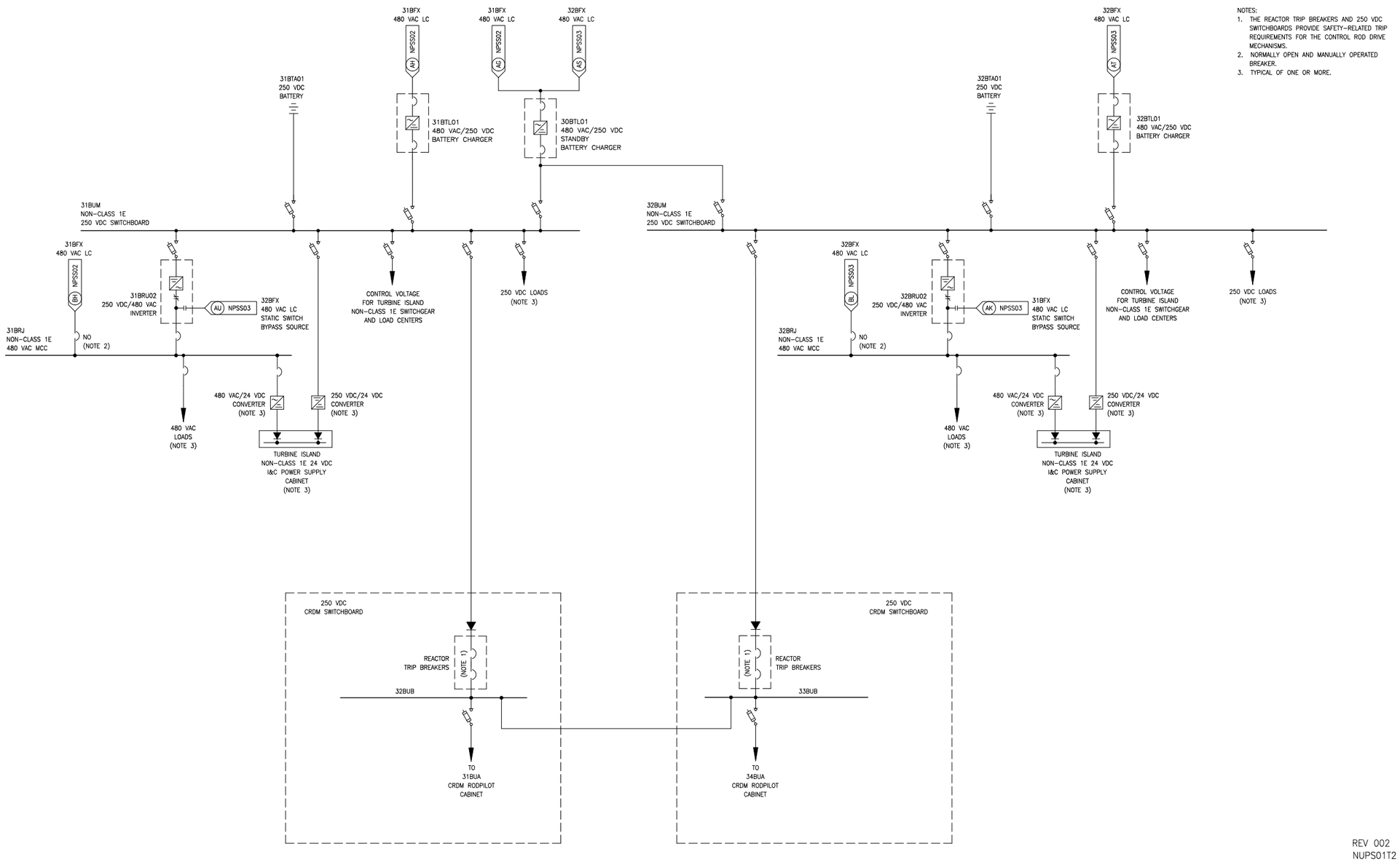

Next File