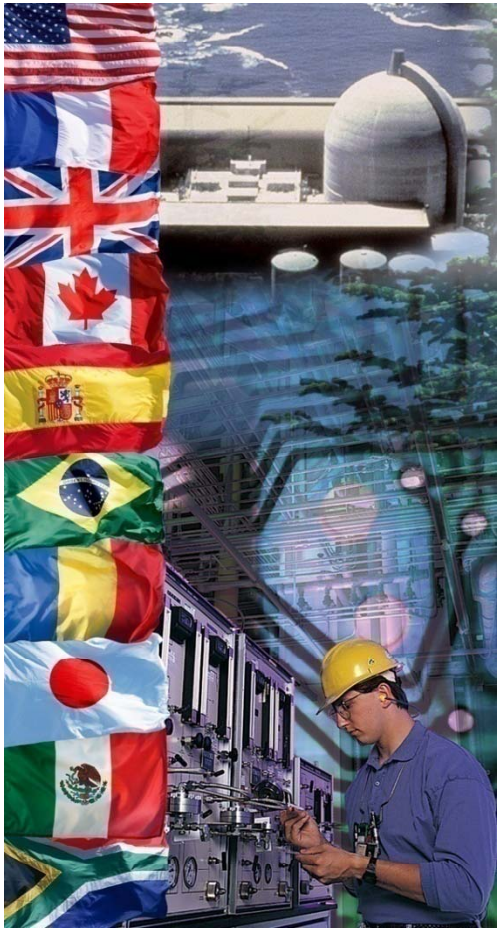

EPRI/NRC-RES FIRE PRA METHODOLOGY

Fire PRA Circuit Analysis Overview

Dan Funk – Edan Engineering Corp.
Gabriel Taylor – U.S. NRC
Office of Nuclear Regulatory Research

Joint RES/EPRI Fire PRA Training Workshop
San Diego, CA, August 2011 and
Jacksonville, FL, November 2011

A Collaboration of U.S. NRC Office of Nuclear Regulatory Research (RES) & Electric Power Research Institute (EPRI)

CIRCUIT ANALYSIS OVERVIEW
Introductions

- Instructors
  - Daniel Funk, P.E., Edan Engineering
  - Gabriel Taylor, NRC Office of Nuclear Regulatory Research
- Who's here and Why?
  - Name, Organization, Experience
  - What do you want from this course?
- Logistics

CIRCUIT ANALYSIS OVERVIEW
Course Prerequisites

- Who Should Attend?
  - Nuclear plant personnel with electrical and plant operating knowledge, but limited exposure to Appendix R and PRA
  - Nuclear plant personnel with substantial Appendix R and/or PRA experience, but limited circuit analysis experience
  - Anyone who went to the Circuit Analysis Basics course

CIRCUIT ANALYSIS OVERVIEW
Objectives

- This module covers technical tasks for analysis of fire-induced circuit failures in support of a Fire PRA
- This module is geared toward PRA practitioners and fire safe shutdown analysts with a practical understanding of the concepts and methods of fire-induced circuit failure analysis within the context of Fire PRA or Appendix R circuit failure assessments. Specifically, familiarity with the following topics is recommended:
  - General circuit design and operational control for typical plant equipment
  - Basic circuit analysis techniques for identifying and classifying fire-induced circuit failure modes
  - Working level knowledge of typical electrical drawings, including one-line diagrams, schematic diagrams, electrical block diagrams, wiring/connection diagrams, raceway layout drawings, instrument loop diagrams, etc.
  - Cable and raceway, Appendix R safe shutdown, and Fire PRA database structures and software
  - Appendix R safe shutdown circuit analysis
  - Emerging issues and challenges associated with the analysis of multiple spurious operations

CIRCUIT ANALYSIS OVERVIEW
Objectives, cont…

- It is expected that upon completion of the Circuit Analysis Module, attendees will have sufficient working knowledge of techniques and methods to perform at a practical level the electrical analysis tasks associated with supporting a Fire PRA

- **NEW!** Methodology presentations will show relationships to the PRA Standard and NEI 00-01, Rev. 2

Note: NEI 00-01, Rev 3 is in final stages of issuance

CIRCUIT ANALYSIS OVERVIEW
Presentation Road Map

- Course Introduction
- Circuit Analysis Process, Methods, and Criteria
- Walk Through Sample Problems
- Hands-on Sample Problem Exercises
- Database & Data Management
- Project Strategy, Key Considerations, and Lessons Learned

Module 2 - Fire PRA Circuit Analysis — Agenda

	Tuesday	Wednesday	Thursday	Friday
8:30	**General Session** - Introduction to all Modules	**Presentation** - Detailed Circuit Failure Analysis (Task 9)	**Presentation** - Fire PRA Database	**Exercises** - Work Task 10 Sample Problems
8:45				
9:00				
9:15				
9:30				
9:45			**Break**	**Break**
10:00			- Fire PRA Database (continued)	**Discussion** - Task 10 Sample Problems
10:15		**Break**		
10:30		**Presentation** - Task 3 & Task 9 Sample Problem Definition and Examples		
10:45				
11:00			**Discussion** - Open, Q&A, etc.	**Discussion** - Summary and Conclusions
11:15				
11:30				
11:45				
12:00	**LUNCH BREAK**	**LUNCH BREAK**	**LUNCH BREAK**	**LUNCH BREAK**
13:00	**Presentation** - Fire PRA Circuit Analysis Overview	**Exercises** - Work Task 3 & Task 9 Sample Problems	**Presentation** - Circuit Failure Mode Likelihood Analysis (Task 10)	**General Session** - Closing: All Modules
13:15				
13:30				
13:45				
14:00	**Presentation** - Fire PRA Circuit Analysis Summary			
14:15				
14:30	**Break**		**Break**	
14:45	**Presentation** - Fire PRA Cable Selection (Task 3)		- Circuit Failure Mode Likelihood Analysis (continued)	
15:00				
15:15				
15:30				
15:45	**Break**	**Break**	**Break**	
16:00	- Fire PRA Cable Selection (continued)	**Discussion** - Task 3 & Task 9 Sample Problems	- Circuit Failure Mode Likelihood Analysis (cont.)	
16:15				
16:30			**Presentation** - Task 10 Sample Problems	
16:45				
17:00	**ADJOURN**	**ADJOURN**	**ADJOURN**	**ADJOURN**

CIRCUIT ANALYSIS OVERVIEW
Circuit Analysis Tasks

- Task 3: Fire PRA Cable Selection
  - What cables are associated with the FPRA components?
- Task 9: Detailed Circuit Analysis
  - Which cables can affect the credited functionality?
  - Task 9A / 9B Split
  - What failure modes are possible given fire damage to the cable?
- Task 10: Circuit Failure Mode Likelihood Analysis
  - How likely to occur are the failure modes of concern?
- Support Task B: Fire PRA Database
  - Warehousing data and determining impacts

CIRCUIT ANALYSIS OVERVIEW

PRA Task Flow Chart

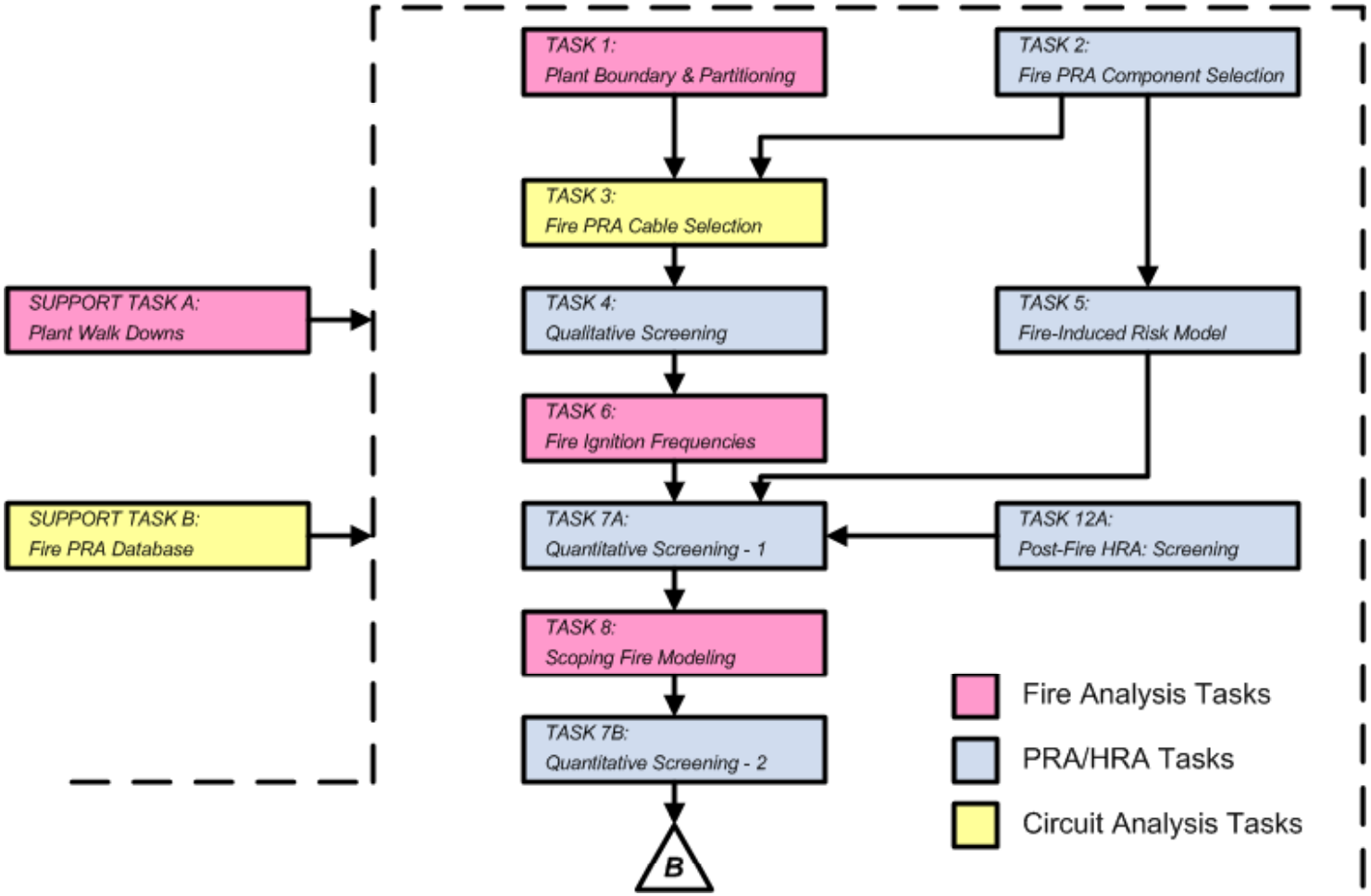

CIRCUIT ANALYSIS OVERVIEW
PRA Task Flow Chart, cont…

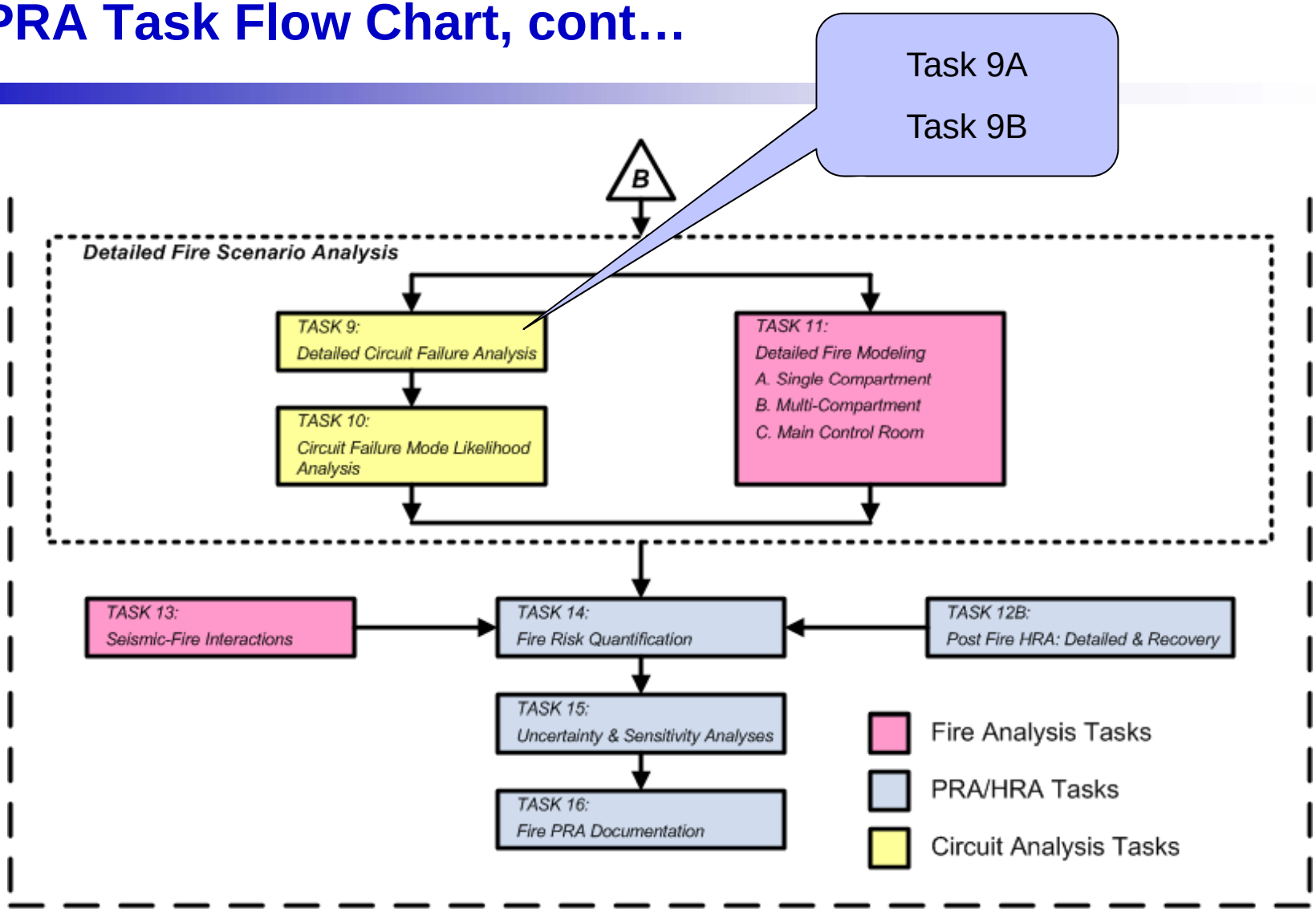

CIRCUIT ANALYSIS OVERVIEW
Key Considerations

- Each Circuit Analysis task represents a refined level of detail (i.e., graded approach)
- Existing Appendix R Circuit Analysis is **NOT** as useful as originally envisioned
- Circuit Analysis for Fire PRA is more complex and difficult compared to Appendix R
- Circuit Analysis (including cable tracing) can consume 40%-70% of overall budget
- Circuit Analysis scope **MUST** be a primary consideration during project planning

CIRCUIT ANALYSIS OVERVIEW
Questions

Any questions before we start ???

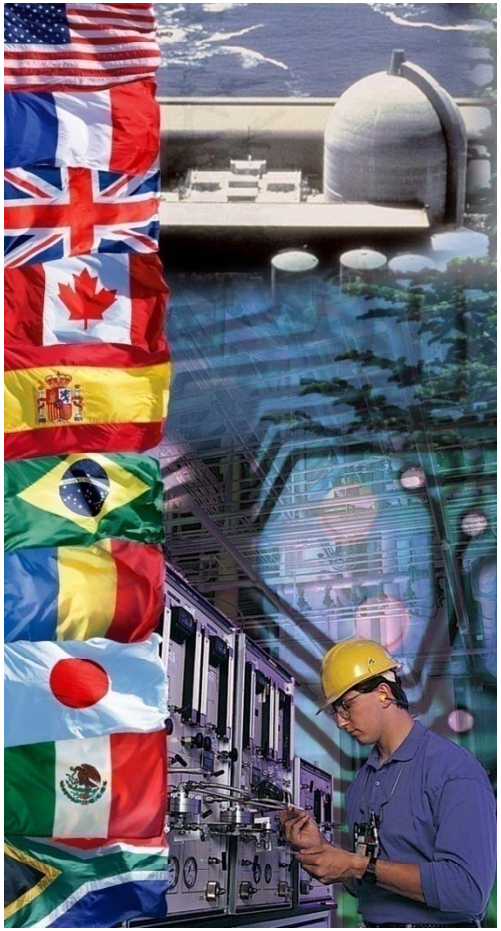

EPRI/NRC-RES FIRE PRA METHODOLOGY

Fire PRA Circuit Analysis Summary

Dan Funk – Edan Engineering Corp.
Gabriel Taylor – U.S. NRC
Office of Nuclear Regulatory Research

Joint RES/EPRI Fire PRA Training Workshop
San Diego, CA, August 2011 and
Jacksonville, FL, November 2011

A Collaboration of U.S. NRC Office of Nuclear Regulatory Research (RES) & Electric Power Research Institute (EPRI)

CIRCUIT ANALYSIS SUMMARY
Topics

- Circuit Analysis “Big Picture” Road Map
- Interface with Fire PRA Group
- Circuit Analysis Strategy & Implementation
- Key Considerations & Factors
- Relationship to Appendix R & NFPA 805
- Lessons Learned

CIRCUIT ANALYSIS SUMMARY
Circuit Analysis Road Map

- Task 3 / 9A
  - Fire PRA Cable Selection
  - Circuit Analysis (Part A): Design Attributes
- Task 9B / 10
  - Circuit Analysis (Part B): Configuration Attributes
  - Circuit Failure Mode Likelihood Analysis
- Support Task B – Fire PRA Database

Remember – You cannot work in a vacuum! You must interface continuously with all team members!

CIRCUIT ANALYSIS SUMMARY
Interface with Fire PRA Group

- Coordination with Task 2 (Component Section) is essential – MUST understand the EXACT functionality credited for each component
- Essential that Fire PRA and NFPA-805 data be fully integrated

  Note: The subtleties of aligning Fire PRA and traditional Appendix R / NFPA-805 data is more complex than originally anticipated. This primarily shows up in Component Selection (Task 2), but has major ramifications to the circuit analysis

- Existing Appendix R Circuit Analysis is **NOT** as useful as originally envisioned

CIRCUIT ANALYSIS SUMMARY
Interface with Fire PRA Group (continued)

- Be forewarned…the PRA process is iterative and the components / function states will change (i.e., you will redo some analyses)

- Do not expect the PRA analysts to fully understand the various nuances with the circuit analysis for any given functional state – you will need to question them on inherent assumptions with the Basic Events

  Example: What automatic functions are inherently credited for a given Basic Event? Is the automatic function really required for the Fire Scenario?

CIRCUIT ANALYSIS SUMMARY
Strategy and Implementation

- Each Circuit Analysis task represents a refined level of detail (i.e., graded approach)
- Level-of-effort for the electrical work is a key driver for project scope, schedule, and resources
  - High programmatic risk if not carefully controlled
  - Analysis and routing of all cables can be a large resource sink with minimal overall benefit
  - Concerns validated by most projects
- Important to screen out obvious "Not Required" cables during the initial cable selection process (Task 9A), with refinement driven by quantitative screening (Task 9B)

CIRCUIT ANALYSIS SUMMARY
Strategy and Implementation (continued)

- Circuit Analysis (including cable tracing) can consume 40%-70% of overall budget
- Circuit Analysis scope **MUST** be a primary consideration during project planning
- Qualified and experienced circuit analysts must be integral members of the PRA team
- Evaluation, coordination, and integration with Appendix R must occur early and must be rigorous
- Long-term strategy for data configuration control – especially if sharing data with Appendix R / NFPA 805

CIRCUIT ANALYSIS SUMMARY

Key Considerations & Factors

- Circuit Analysis remains a technically and logistically challenging area
  - Practical aspects of dealing with an integrated data set
  - Practical approach for dealing with MSOs
  - Circuit Analysis is more complex and difficult than analyses performed under Appendix R
- Availability, quality, and format of cable data
- Availability of electrical engineering support
  - Circuit Analysis is a developed expertise
  - Do not expect to be a proficient analyst based on a simple introductory course

CIRCUIT ANALYSIS SUMMARY
Key Considerations & Factors (continued)

- Usability of Appendix R circuit analysis data
  - Not as useful as originally envisioned
  - Automated tools are essential
  - Functional state analysis is critical – overly conservative cable selection will not work for Fire PRA
  - Many plants are finding that circuit analysis re-baseline is necessary to support upgraded Fire PRA and NFPA-805 projects
- User-friendliness of electrical drawings

CIRCUIT ANALYSIS SUMMARY
Relationship to Appendix R & NFPA 805

- Practical aspects of dealing with an integrated data set
- Practical approach for dealing with MSOs
- Implication of these Advances: Circuit Analysis is more complex and difficult than analyses performed under Appendix R

CIRCUIT ANALYSIS SUMMARY
Lessons Learned

- Do not underestimate scope
- Ensure proper resources are committed to project
- Doable but **MUST** work smart
- Do not "broad brush" interface with Appendix R – have a detailed plan before starting
- Interface between PRA and Electrical groups is typically poor
- Develop project procedures – but don't get carried away
- Compilation and management of large volume of data
  - Automated tools imperative for efficient process
  - Long-term configuration management often overlooked until very end of the project

CIRCUIT ANALYSIS SUMMARY
Lessons Learned (continued)

- NFPA 805 projects assume too much about the ability of the Fire PRA model to answer specific Appendix R questions

CIRCUIT ANALYSIS SUMMARY
Questions

Any Questions?

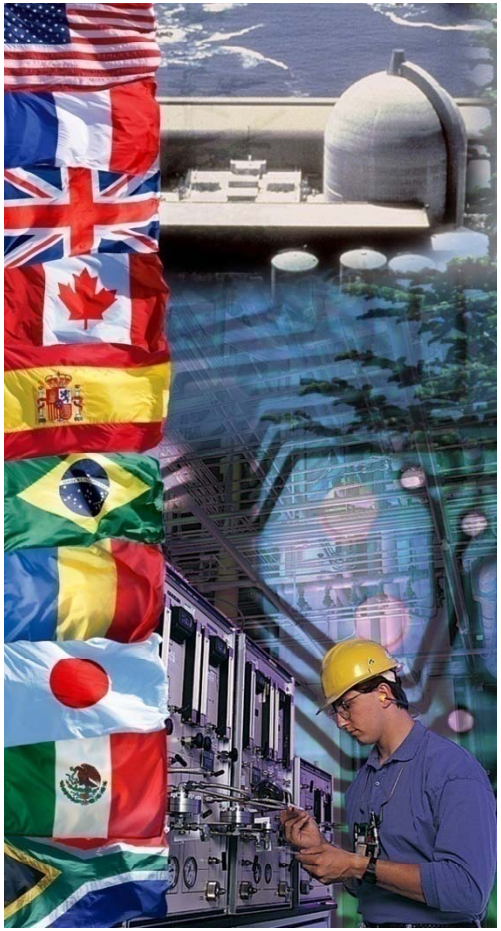

EPRI/NRC-RES FIRE PRA METHODOLOGY

Task 3 - Fire PRA Cable Selection

Dan Funk – Edan Engineering Corp.
Gabriel Taylor – U.S. NRC
Office of Nuclear Regulatory Research

Joint RES/EPRI Fire PRA Training Workshop
San Diego, CA, August 2011 and
Jacksonville, FL, November 2011

A Collaboration of U.S. NRC Office of Nuclear Regulatory Research (RES) & Electric Power Research Institute (EPRI)

FIRE PRA CABLE SELECTION
Purpose & Scope (per 6850/1011989)

- Identify circuits/cables associated with Fire PRA components
- Determine routing/location of the identified cables
- Use component-to-cable-to-location relationships to determine what components could be affected for postulated Fire Scenarios

  Note: A Fire Scenario can involve a Fire Area, Room/Compartment, Raceway, or Other Specific Location

- Identify Fire PRA power supplies

FIRE PRA CABLE SELECTION
Corresponding PRA Standard Element

- Primary match is to element CS – Cable Selection
  - CS Objectives (as stated in the PRA standard):

    "[T]o ensure that

    (a) all cables needed to support proper operation of equipment selected per technical element ES (see 4-2.2) are identified and assessed for relevance to the Fire PRA plant response model

    (b) the plant location information for selected cables is sufficient to support the Fire PRA and its intended applications."

FIRE PRA CABLE SELECTION
HLRs (per the PRA Standard)

- HLR-CS-A: The Fire PRA shall identify *and* locate the plant cables whose failure could adversely affect credited equipment or functions included in the Fire PRA plant response model, as determined by the equipment selection process (HLR-ES-A, HLR-ES-B, and HLR-ES-C). (11 SRs)
- HLR-CS-B: The Fire PRA shall
  - *(a)* perform a review for additional circuits that are either required to support a credited circuit (i.e., per HLR-CS-A) or whose failure could adversely affect a credited circuit
  - *(b)* identify any additional equipment and cables related to these additional circuits in a manner consistent with the other equipment and cable selection requirements of this Standard. (1 SR)
- HLR-CS-C: The Fire PRA shall document the cable selection and location process and results in a manner that facilitates Fire PRA applications, upgrades, and peer review. (4 SRs)

FIRE PRA CABLE SELECTION

NEI 00-01, Rev. 2, Section 3.3 – Safe Shutdown Cable Selection and Location

- NEI 00-01, Rev. 2, "Guidance for Post-Fire Safe Shutdown Circuit Analysis," May 2009.
- Generally follows the Task 3 methodology of NUREG/CR-6850, EPRI TR 1011989.
- Figure 3-4 in NEI 00-01 provides a flowchart illustrating the steps involved in selecting the cables necessary for performing a post-fire safe shutdown analysis:

  Step 1 – Define safe shutdown equipment.

  Step 2 – Identify circuits (power, control, instrumentation) required for the operation of each safe shutdown equipment.

  Step 3 – Identify equipment whose spurious operation or mal-operation could affect safe shutdown.

FIRE PRA CABLE SELECTION

NEI 00-01, Rev. 2, Section 3.3 – Safe Shutdown Cable Selection and Location (continued)

Step 4 – Identify interlocked circuits and cables whose failure may cause spurious actuations.

Step 5 – *Decision:* Is power required for equipment operation?

Step 6 – If power is required, identify closest upstream power supply and verify that it is on the safe shutdown list.

Step 7 – Assign cables to equipment.

Step 8 – Identify routing of cables.

Step 9 – Identify location of cables by fire area.

FIRE PRA CABLE SELECTION
Introduction (per 6850/1011989)

- Conducted for all Fire PRA Components

  Note: Exceptions do exist

- Cable selection is a **Deterministic** process

- Selected cables are associated to components based on specified functionality
  - Basic circuit analysis (Task 9A) incorporated into Task 3 work to prevent overwhelming the PRA model with inconsequential cable failures
  - Final product is a listing of defined Basic Events (component and credited function) that could be impacted by a fire in a given location (Fire Area, Compartment, etc.) or for a specific Fire Scenario

FIRE PRA CABLE SELECTION
Introduction (continued)

- Cable Selection procedure is subdivided into six (6) distinct steps

  Step 1: Compile and Evaluate Prerequisite Information and Data

  Step 2: Select Fire PRA Circuits/Cables

  Step 3: Identify and Select Fire PRA Power Supplies

  Step 4: Perform Associated Circuits Review

  Step 5: Determine Cable Routing and Plant Locations

  Step 6: Generate Fire PRA Cable List and Target Equipment Location Reports

FIRE PRA CABLE SELECTION
Task Interfaces - Input

- Plant Boundary Partitions (Task 1)
- Fire PRA Component List (Task 2)
- Fire PRA Database (Support Task B)
- Appendix R Circuit Analysis
- Plant Cable & Raceway Database
- Plant Drawings

FIRE PRA CABLE SELECTION
Task Interfaces - Output

- Fire PRA Cable List
- Fire PRA Power Supply List
- Associated Circuits Review
- Component Analysis Packages
- Target Equipment Loss Reports (potential equipment functional losses broken down by location or fire scenario)

FIRE PRA CABLE SELECTION
Step 1 – Prerequisite Information

- Confirm Plant Partitioning is compatible
  - Do partitions align with cable location data?
  - What data is available and what is missing?
- Confirm PRA Equipment List is final
  - Input into a formal and controlled database
  - For NFPA-805 transition projects a joint "consistency" review of NSP task and PRA component selection task is highly recommended

    NOTE: Consistency checks are recommended for all Fire PRAs
  - *Critical that electrical analysts understand what the Basic Events really mean*

  (Corresponds to NEI 00-01, Rev. 2, Step 1)
- Evaluate Database Requirements
  - What currently exists?
  - What is needed to support work?
  - How is data to be managed and controlled?
  - This is a "Biggie"

FIRE PRA CABLE SELECTION
Step 2 – Select Fire PRA Cables

- Analysis Cases
  - Appendix R Component with *same* functional requirements
    - Must consider which (if any) automatic features are included in the existing analysis
    - Aligning existing analyses to Fire PRA Basic Events is not straightforward
  - Appendix R Component with *different* functional requirements
  - Non-Appendix R Component *with* cable location data
  - Non-Appendix R Component *without* cable location data

- Analysis Sub-Steps
  - *Step 2.1:* Analysis Strategy
  - *Step 2.2:* Plant Specific Rules
  - *Step 2.3:* Select Cables

- Corresponding PRA Standard SRs: CS-A1, A3
- Corresponding NEI 00-01, Rev. 2, Steps: 2 & 4

FIRE PRA CABLE SELECTION
Step 2.1 – Analysis Strategy

- Coordinate with Systems Analysts to establish Functional Requirements and General Rules
  - Equipment functional states, basic events, initiators
  - Initial conditions and equipment lines (i.e., normal state)
  - Consistent conventions for equipment functions/state/position
  - Equipment-level dependencies and primary components
  - Multiple function components
  - "Super" components
- Evaluate Appendix R Component & Circuit Data
  - Ensure equipment list comparison was conducted during Task 2
  - Review in detail the comparison list – ask questions!!!
  - Essential that comparison includes detailed review/assessment of "desired functional state(s)"

FIRE PRA CABLE SELECTION
Step 2.1 – Analysis Strategy (continued)

- Goal – Efficient and accurate process to obtain required information
- Revisit past assumptions, conventions, and approach
- Potential trouble areas
  - How is off-site power going to be handled?
  - Instrument circuits – understand exactly what is credited
  - ESFAS, Load-Shed, EDG Sequencer, other automatic functions
  - Medium-voltage switchgear control power
- Extent that Circuit Analysis is to be conducted concurrently

  Note: This will be discussed as part of the Task 9 presentation
- Determine how analysis will be documented

FIRE PRA CABLE SELECTION
Step 2.2 – Plant Specific Cable Selection Rules

- Objective is Consistency
- Approach for Groups of Components
- Approach for Spurious Actuation Equipment
- Auxiliary Contacts – Critical Area for Completeness
- System-Wide Actuation Signals
- Bus or Breaker?
- Subcomponents & Primary Components
- Identification of Permanent Damage Scenarios
- Procedure - Develop Circuit Analysis Procedure/Guidelines

FIRE PRA CABLE SELECTION
Step 2.2 – Ready to Start?

- Develop Written Project Procedure/Guidelines
  - Consistency, Consistency, Consistency
  - Checking Process?
  - Data Entry
  - Problem Resolution

- Training for Analysts
  - Prior circuit analysis experience is a prerequisite for key team members
  - Familiarity with plant drawings and circuits is highly beneficial
  - A junior engineer with no prior circuit analysis experience will not be able to work independently

FIRE PRA CABLE SELECTION
Step 2.3 – Select Cables

- *Case 1:* Incorporate Existing Appendix R Analysis
  - Confirm adequacy of existing analyses IAW plan
  - Careful consideration of automatic functions
  - Exact alignment for credited functionality

- *Case 2:* New Functional State/Component w/ Cable Routing Data
  - Collect drawings and/or past analysis information
  - Identify/select cables IAW plant specific procedure/guidelines
  - Conduct circuit analysis to the extent decided upon
  - Formally document cable selection IAW established procedures/guidelines

FIRE PRA CABLE SELECTION
Step 2.3 – Select Cables (continued)

- *Case 3:* New Component w/o Cable Routing Data Available
  - Same as Case 2, plus…
  - Determine cable routing and associate with plant locations, including cable end points

- Analysis Work Packages
  - Retrieve from past Appendix R Analysis
  - Highly recommended for new components
  - Major time saver for future work

Note: More on Work Packages later in this presentation…

FIRE PRA CABLE SELECTION
Step 3 – Select Fire PRA Power Supplies

- Identify Power Supplies as integral part of Cable Selection
  - Make sure to differentiate between “Required” and “Not Required” power supplies
  - Switchgear and instrument power supplies can be tricky
  - Useful to identify the applicable breaker/fuse
- Add Power Supplies to Fire PRA Component List
- Make sure Fire PRA model, equipment list, and circuit analysis are consistent
- Does Fire PRA model consider spurious circuit breaker operations?
  - Must understand how this is modeled to correctly select cables
- Corresponding PRA Standard SRs: CS-B1
- Corresponding NEI 00-01, Rev. 2, Steps: 5 & 6

FIRE PRA CABLE SELECTION
Step 4 – Associated Circuits Review

- Objective is to confirm existing studies are adequate
- View the process as a "Gap Analysis"
- Common Power Supply Circuits - Assess Plant Coordination Studies
- Common Enclosure Circuits - Assess Plant Electrical Protection
- Roll up results to Circuit Analysis or Model as appropriate

  Note: Ensure switchgear internal fusing supports analysis assumptions

- Corresponding PRA Standard SRs: CS-A6, CS-B1
- Corresponding NEI 00-01, Rev. 2: Step 3 and Sections 3.5.2.4 & 3.5.2.5 (circuit analysis and evaluation)

FIRE PRA CABLE SELECTION
Step 5 – Determine Cable Routing and Locations

- Correlate Cables-to-Raceways-to-Locations
- Conceptually Straightforward
- Logistically Challenging
  - Labor intensive
  - Manual review of layout drawings
  - Plant walkdowns often required
- Determine Cable Protective Features
  - Fire wraps
  - Embedded conduit

- Corresponding PRA Standard SRs: CS-A10
- Corresponding NEI 00-01, Rev. 2, Steps: 7, 8, & 9

FIRE PRA CABLE SELECTION
Step 6 – Target Equipment Loss Reports

- Data Entered into Fire PRA Database
- Sorts and Queries to Generate Target Equipment Loss Reports

Perspective – Cable selection process should be viewed as providing "Design Input" to the Fire PRA. It does not, however, provide any risk-based results. In its simplest form it provides a list of equipment that could be affected by a fire at a specified location or for a specific fire scenario.

- Corresponding PRA Standard SRs: CS-C1, C2, C4

FIRE PRA CABLE SELECTION
Work Packages

- A work package for each Fire PRA component consists of a compilation of drawings and documents that provide the basis of the circuit analysis results for that component
- Contents typically include
  - One-line diagram(s) (highlighted to show the component's power supply)
  - Elementary diagram(s) (marked up to show cable associations)
  - Block diagram(s) (highlighted)
  - Loop diagram(s) (if applicable)
  - Component circuit analysis worksheets
  - Other descriptive/supporting information

FIRE PRA CABLE SELECTION
Questions

Any Questions?

FIRE PRA CABLE SELECTION

Mapping HLRs & SRs for the CS technical element to NUREG/CR-6850, EPRI TR 1011989

Technical Element	HLR	SR	6850/1011989 Sections that cover SR	Comments
CS	A	The Fire PRA shall identify and locate the plant cables whose failure could adversely affect credited equipment or functions included in the Fire PRA plant response model, as determined by the equipment selection process (HLR-ES-A, HLR-ES-B, and HLR-ES-C).		
		1	3.5.2	
		2	9.5.2	Covered in "Detailed Circuit Failure Analysis" chapter
		3	3.5.2, 9.5.2	Also covered in "Detailed Circuit Failure Analysis" chapter
		4	3.5.3	
		5	9.5.2	Covered in "Detailed Circuit Failure Analysis" chapter
		6	3.5.4, 9.5.2	Also covered in "Detailed Circuit Failure Analysis" chapter
		7	9.5.2	Covered in "Detailed Circuit Failure Analysis" chapter
		8	9.5.2	Covered in "Detailed Circuit Failure Analysis" chapter
		9	9.5.2	Covered in "Detailed Circuit Failure Analysis" chapter
		10	3.5.5	
		11	3.5.5	
	B	The Fire PRA shall (a) perform a review for additional circuits that are either required to support a credited circuit (i.e., per HLR-CS-A) or whose failure could adversely affect a credited circuit (b) identify any additional equipment and cables related to these additional circuits in a manner consistent with the other equipment and cable selection requirements of this Standard		
		1	3.5.3, 3.5.4	
	C	The Fire PRA shall document the cable selection and location process and results in a manner that facilitates Fire PRA applications, upgrades, and peer review.		
		1	3.5.6	
		2	3.5.6	
		3	3.5.6	
		4	3.5.6	

FIRE PRA CABLE SELECTION

Mapping NEI 00-01, Rev. 2, Safe Shutdown Cable Selection to NUREG/CR-6850, EPRI TR 1011989

NEI 00-01, Rev. 2, Section	NEI 00-01, Figure 3-4 Step	6850/1011989 Sections that cover step	Comments
3.3 - Safe Shutdown Cable Selection and Location	1	3.5.1	
	2	3.5.2	
	3	3.5.4	
	4	3.5.2	
	5	3.5.3	
	6	3.5.3	
	7	3.5.5	
	8	3.5.5	
	9	3.5.5	

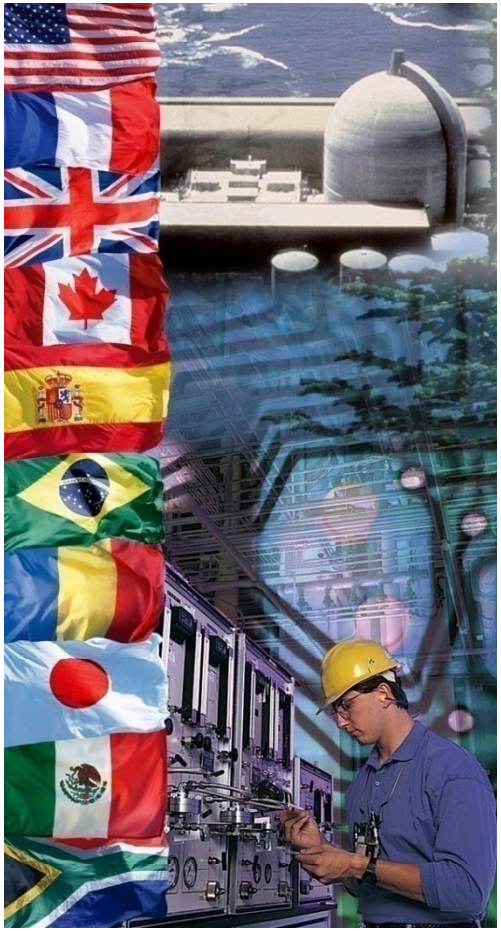

EPRI/NRC-RES FIRE PRA METHODOLOGY

Task 9 - Detailed Circuit Failure Analysis

Dan Funk – Edan Engineering Corp.
Gabriel Taylor – U.S. NRC
Office of Nuclear Regulatory Research

Joint RES/EPRI Fire PRA Training Workshop
San Diego, CA, August 2011 and
Jacksonville, FL, November 2011

A Collaboration of U.S. NRC Office of Nuclear Regulatory Research (RES) & Electric Power Research Institute (EPRI)

DETAILED CIRCUIT FAILURE ANALYSIS
Purpose & Scope (per 6850/1011989)

The Detailed Circuit Failure Analysis Task is intended to:

- Identify the potential response of circuits and components to specific cable failure modes associated with fire-induced cable damage
- Screen out cables that do not impact the ability of a component to complete its credited function

DETAILED CIRCUIT FAILURE ANALYSIS
Corresponding PRA Standard Elements

- One match is to element CS – Cable Selection
  - CS Objectives (as stated in the PRA standard):

    "[T]o ensure that

    (a) all cables needed to support proper operation of equipment selected per technical element ES (see 4-2.2) are identified and assessed for relevance to the Fire PRA plant response model

    (b) the plant location information for selected cables is sufficient to support the Fire PRA and its intended applications."

DETAILED CIRCUIT FAILURE ANALYSIS
Corresponding PRA Standard Elements (continued)

- Another match is to element CF – Circuit Failures
  - CF Objectives (as stated in the PRA standard):

    "[T]o

    (a) refine the understanding and treatment of fire-induced circuit failures on an individual fire scenario basis

    (b) ensure that the consequences of each fire scenario on the damaged cables and circuits have been addressed"

DETAILED CIRCUIT FAILURE ANALYSIS

HLRs (per the PRA Standard) – CS element

- HLR-CS-A: The Fire PRA shall identify *and* locate the plant cables whose failure could adversely affect credited equipment or functions included in the Fire PRA plant response model, as determined by the equipment selection process (HLR-ES-A, HLR-ES-B, and HLR-ES-C). (11 SRs)
- HLR-CS-B: The Fire PRA shall
  - *(a)* perform a review for additional circuits that are either required to support a credited circuit (i.e., per HLR-CS-A) or whose failure could adversely affect a credited circuit
  - *(b)* identify any additional equipment and cables related to these additional circuits in a manner consistent with the other equipment and cable selection requirements of this Standard. (1 SR)
- HLR-CS-C: The Fire PRA shall document the cable selection and location process and results in a manner that facilitates Fire PRA applications, upgrades, and peer review. (4 SRs)

DETAILED CIRCUIT FAILURE ANALYSIS
HLRs (per the PRA Standard) – CF element

- HLR-CF-A: The Fire PRA shall determine the applicable conditional probability of the cable and circuit failure mode(s) that would cause equipment functional failure and/or undesired spurious operation based on the credited function of the equipment in the Fire PRA. (2 SRs)
- HLR-CF-B: The Fire PRA shall document the development of the elements above in a manner that facilitates Fire PRA applications, upgrades, and peer review. (1 SR)

DETAILED CIRCUIT FAILURE ANALYSIS

NEI 00-01, Rev. 2, Section 3.5 – Circuit Analysis and Evaluation

- NEI 00-01, Rev. 2, "Guidance for Post-Fire Safe Shutdown Circuit Analysis," May 2009.
- Generally follows the Task 9 methodology of NUREG/CR-6850, EPRI TR 1011989.
- Types of circuit failures to be considered:
  - Open circuits (available fault energy)
  - Shorts-to-ground
  - Hot shorts (new insights)
- Other considerations:
  - Common power supplies (i.e., inadequate coordination)
  - Common enclosures (i.e., inadequate circuit protection)

DETAILED CIRCUIT FAILURE ANALYSIS
Introduction (1) (per 6850/1011989)

- Fundamentally this is a deterministic analysis
- Perform coincident with cable selection (Task 3) to the extent feasible and cost effective ("Task 9A")
- Difficult cases generally reserved for situations in which Quantitative Screening indicates a clear need and advantage for further analysis
- Detailed Failure Modes Analysis
  - Requires knowledge about desired functionality and component failure modes
  - Conductor-by-conductor evaluation (Hot Probe method recommended)
- Objective is to screen out all cables that **CANNOT** impact the ability of a component to fulfill the specific function of interest

DETAILED CIRCUIT FAILURE ANALYSIS
Introduction (2)

- Failure modes considered
  - Single shorts-to-ground (reference ground)
    - Grounded system
    - Ungrounded system
    - Resistance grounded system
  - Single hot shorts
  - Compatible polarity multiple hot shorts for ungrounded AC and DC circuits (surrogate path through raceway)
  - Coincident independent hot shorts on separate cables
  - Multiple intra-cable hot shorts
  - Cables associated through a common power supply

DETAILED CIRCUIT FAILURE ANALYSIS
Introduction (3)

- Failure modes **NOT** considered
  - 3-phase proper sequence hot shorts (except high consequence equipment with thermoplastic insulated conductor or ungrounded configuration)
  - Inter-cable hot shorts for armored cable and cable in dedicated conduit
  - Open circuit conductor failures (Reconsider)
  - Multiple high-impedance faults

Note: If conducting a combined NFPA-805 and Fire PRA circuit analysis, NEI 00-01 requires open circuits be considered.

DETAILED CIRCUIT FAILURE ANALYSIS
Introduction (4)

Application of Task 9A versus Task 9B:

- Task 9A circuit analysis performed as part of the Task 3, Cable Selection, process
  - Intended to be a very quick screening determination about whether a given cable is able to adversely impact the ability of a required component to complete its credited function, and thus should be put on the Fire PRA Cable List
- Detailed circuit analysis (Task 9B) is performed as described by the Task 9 methodology (i.e., the basis of this presentation)
  - Intended to be a more robust assessment of a cable's potential impact on the Fire PRA component of interest and is performed later in the overall Fire PRA process, after some screening has occurred

Note: The more experience an analyst has performing Task 9B level analyses, the more proficient they become in performing Task 9A level screening.

DETAILED CIRCUIT FAILURE ANALYSIS
Assumptions

The following assumptions form the basis for Task 9:

- An Appendix R analysis for the plant has been completed and is available for identifying equipment failure responses to specific cable failure modes
- Component **Work Packages** have been assembled as part of the Task 3 activities or previous Appendix R analyses
- Equipment is assumed to be in its normal position or operating condition at the onset of the fire – the equipment state might be variable
- Users of this procedure are knowledgeable on and have experience with circuit design and analysis methods

DETAILED CIRCUIT FAILURE ANALYSIS
Process

- The Task 9 procedure is subdivided into three (3) primary steps:

  Step 1: Compile and Evaluate Prerequisite Information and Data

  Step 2: Perform Detailed Circuit/Cable Failure Analysis

  Step 3: Generate Equipment Failure Response Reports

DETAILED CIRCUIT FAILURE ANALYSIS
Task Interfaces - Inputs

- Fire PRA Components List (Task 2)
- Fire PRA Cable List (Task 3)
- Fire PRA Database (Support Task B)
- Results of Quantitative Screening (Task 7)
- Results of Detailed Fire Modeling (Task 11)
- Appendix R Circuit Analysis
- Plant Drawings
- CRS Database

DETAILED CIRCUIT FAILURE ANALYSIS
Task Interfaces - Outputs

- Equipment Failure Response Reports
- Component Analysis (“Work”) Packages (Updated)
- Revised Cable List
- Fire PRA Database & Model Updates

DETAILED CIRCUIT FAILURE ANALYSIS
Step 1 - Compile Prerequisite Information

- Ensure that prerequisite information and data are available and usable before beginning the analyses (ideally the necessary drawings are already in the Work Packages).

- Step 1.1: Confirm Fire PRA Cable List is Available in the Fire PRA Database
  - Component $\Rightarrow$ Cable $\Rightarrow$ Raceway $\Rightarrow$ Compartment

- Step 1.2: Confirm Unscreened Plant Compartments and Scenarios are Identified
  - Target Equipment Loss Reports
  - Equipment ID, Normal Status, Functional Requirements, etc.

DETAILED CIRCUIT FAILURE ANALYSIS
Step 2 - Perform Circuit Failure Analysis

- Perform a *Deterministic-Based* detailed circuit analysis for the Fire PRA cables of interest that are located in the unscreened plant locations.
- Step 2.1: Develop Strategy/Plan for Circuit Analysis
- Step 2.2: Develop Plant-Specific Rules for Performing the Detailed Circuit Analysis
- Step 2.3: Perform Detailed Circuit Failure Analysis
- Document Analysis Results $\Rightarrow$ Component Work Packages

- Corresponding PRA Standard SRs: CS-A2, A3, A5, A6, A7, A8, A9
- Corresponding NEI 00-01, Rev. 2, Section: 3.5.2

DETAILED CIRCUIT FAILURE ANALYSIS
Considerations in Developing Plant-Specific Rules

- Consider the following while developing the plant-specific circuit analysis rules:
  - The types of cable failure modes (hot shorts, shorts to ground) and the effects of concern (spurious actuation, loss of power, loss of control, etc.) on the Fire PRA component.
  - Three-phase proper polarity hot shorts on AC power cables
    - Grounded AC systems using thermoset-insulated cable
    - Ungrounded AC systems **or** thermoplastic-insulated cable
    - Armored cable or cable in dedicated conduit
  - Intra-cable versus Inter-cable hot shorts
  - DC circuit cable failures
  - Coincident independent hot shorts involving separate cables
  - Compatible polarity multiple hot shorts on ungrounded circuits

DETAILED CIRCUIT FAILURE ANALYSIS
Step 3 - Generate Equipment Failure Response Reports

- Enter results into Fire PRA Database

- Generate Equipment Failure Response Reports
  - A listing by location (room, zone, area) of equipment and associated cables affected by fire
  - Provides specific equipment responses (cable failure consequences) that affect the credited function being analyzed
  - Equipment losses should be correlated to each Basic Event

- Corresponding PRA Standard SRs: CF-B1

DETAILED CIRCUIT FAILURE ANALYSIS
Caveats & Recommendations

- This detailed circuit failure analysis methodology is a Static Analysis (no timing issues are considered)
- Be aware of possible Cable Logic Relationships
- Work Packages (Highly Recommended!)
- "Hot Probe" (Conductor-to-Conductor) analysis must be rolled-up to cable/component level
- Outputs need to be Compatible with Fire PRA Database format and field structure
- Coordinate with the Fire PRA Modelers/Analysts early-on to Define the Fire PRA Component Failure Modes of Concern

DETAILED CIRCUIT FAILURE ANALYSIS
Recommended Notation for Analysis

- It is highly recommended that the analysts employ a consistent notation for documenting their results
- In this training course, we will use the following notations:

Primary Circuit Failure Mode Descriptions

EI	Erroneous Indication
EIS	Erroneous Indicating Signal
LIS	Loss of Indicating Signal
LOC	Loss of Control
LOCP	Loss of Control Power (usually applies only to metalclad switchgear that depend on a separate control power source to actuate)
LOI	Loss of Indication
LOP	Loss of Power (to the circuit)
SA	Spuriously Actuates or Spurious Actuation
SC	Spuriously Closes
SO	Spuriously Opens
SS	Spuriously Starts/Runs

Causal Modifiers

BF	Blown Fuse
HS	Hot Short
PR	Protective Relay
SG	Short to Ground

Example Usage:

LOP-BF:	Loss of power due to a blown fuse
SO-HS:	Spuriously opens due to a hot short
LOC-PR:	Loss of control due to a protective relay

DETAILED CIRCUIT FAILURE ANALYSIS
Hot Probe Method – A very simple example

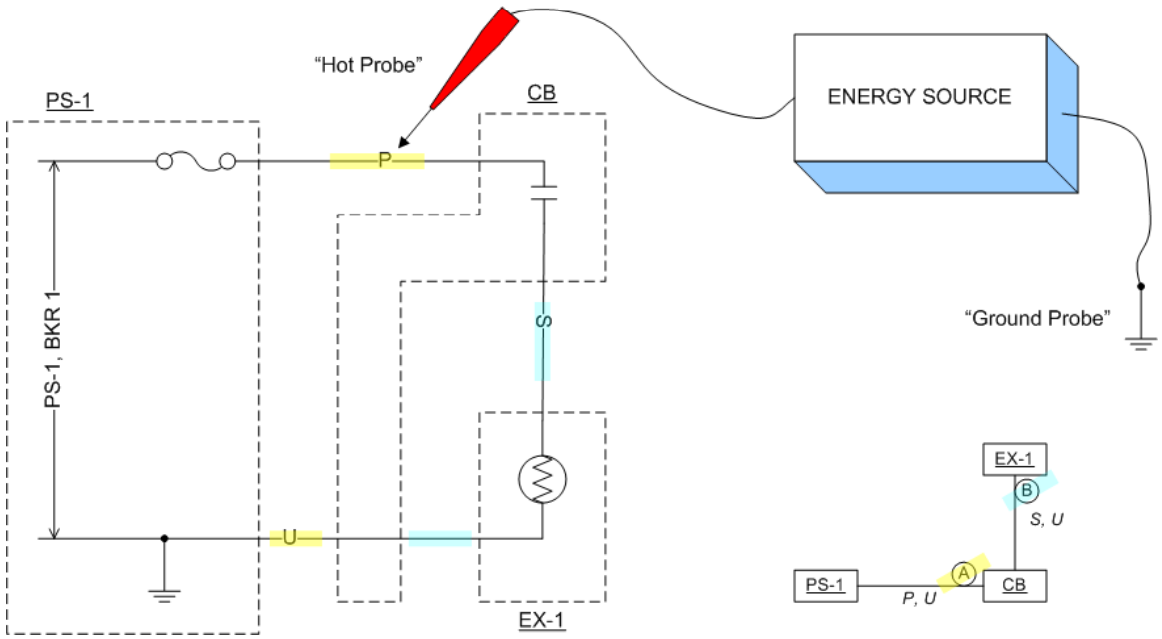

What happens when the **Hot** & **Ground** probes contact:

Conductor	Hot (+) Probe	Ground Probe
P?		
S?		
U?		

DETAILED CIRCUIT FAILURE ANALYSIS
Hot Probe Method Results & Documentation

CIRCUIT ANALYSIS WORKSHEET

Component ID: Ex-1 Component Type: Electrical Component

Component Description: Example 1

Normal Position: DEENERGIZED

Failed Electrical Position: DEENERGIZED

Failed Air Position: N/A

Function State:

Initial Position: DEENERGIZED

Desired Position DEENERGIZED

BE Code: EX1-SA

High Consequence Component Yes ☐ No ☒

Power Supplies: PS-1 Breaker: 1 Req'd ☐

Breaker: Req'd ☐

Cable Analysis:

Cable ID	Req'd ?	MHS ?	Fault Consequence	Comments
EX1A	N			
EX1B	Y		SA, LOC	Pos. hot probe on S causes SA Pos. hot probe on U causes LOC
				Ground probe on S causes LOC

This part will be provided.

If not complete, then ***ask*** for the missing information.

This part and 2nd page ***you*** will complete.

Basically, this documents your analysis.

Note: More about performing Circuit Analysis will be provided in the Electrical Examples presentation.

DETAILED CIRCUIT FAILURE ANALYSIS
Questions

Any Questions?

DETAILED CIRCUIT FAILURE ANALYSIS

Mapping HLRs & SRs for the CS technical element to NUREG/CR-6850, EPRI TR 1011989

Technical Element	HLR	SR	6850/1011989 Sections that cover SR	Comments
CS	A	The Fire PRA shall identify and locate the plant cables whose failure could adversely affect credited equipment or functions included in the Fire PRA plant response model, as determined by the equipment selection process (HLR-ES-A, HLR-ES-B, and HLR-ES-C).		
		1	3.5.2	Covered in "Fire PRA Cable Selection" chapter
		2	9.5.2	
		3	3.5.2, 9.5.2	Also covered in "Fire PRA Cable Selection" chapter
		4	3.5.3	Covered in "Fire PRA Cable Selection" chapter
		5	9.5.2	
		6	3.5.4, 9.5.2	Also covered in "Fire PRA Cable Selection" chapter
		7	9.5.2	
		8	9.5.2	
		9	9.5.2	
		10	3.5.5	Covered in "Fire PRA Cable Selection" chapter
		11	3.5.5	Covered in "Fire PRA Cable Selection" chapter
	B	The Fire PRA shall (a) perform a review for additional circuits that are either required to support a credited circuit (i.e., per HLR-CS-A) or whose failure could adversely affect a credited circuit (b) identify any additional equipment and cables related to these additional circuits in a manner consistent with the other equipment and cable selection requirements of this Standard		
		1	3.5.3, 3.5.4	Covered in "Fire PRA Cable Selection" chapter
	C	The Fire PRA shall document the cable selection and location process and results in a manner that facilitates Fire PRA applications, upgrades, and peer review.		
		1	3.5.6	Covered in "Fire PRA Cable Selection" chapter
		2	3.5.6	Covered in "Fire PRA Cable Selection" chapter
		3	3.5.6	Covered in "Fire PRA Cable Selection" chapter
		4	3.5.6	Covered in "Fire PRA Cable Selection" chapter

DETAILED CIRCUIT FAILURE ANALYSIS

Mapping HLRs & SRs for the CF technical element to NUREG/CR-6850, EPRI TR 1011989 (continued)

Technical Element	HLR	SR	6850/1011989 Sections that cover SR	Comments
CF	A	The Fire PRA shall determine the applicable conditional probability of the cable and circuit failure mode(s) that would cause equipment functional failure and/or undesired spurious operation based on the credited function of the equipment in the Fire PRA.		
		1	10.5.2, 10.5.3	Covered in "Circuit Failure Mode Likelihood Analysis" chapter
		2	10.5.3	Covered in "Circuit Failure Mode Likelihood Analysis" chapter
	B	The Fire PRA shall document the development of the elements above in a manner that facilitates Fire PRA applications, upgrades, and peer review.		
		1	9.5.3, 10.5.3	Also covered in "Circuit Failure Mode Likelihood Analysis" chapter

DETAILED CIRCUIT FAILURE ANALYSIS

Mapping NEI 00-01, Rev. 2, Circuit Analysis and Evaluation to NUREG/CR-6850, EPRI TR 1011989

NEI 00-01, Rev. 2, Section	NEI 00-01, Section 3.5.2 – Types of Circuit Failures	6850/1011989 Sections that cover step	Comments
3.5 – Circuit Analysis and Evaluation	3.5.2.1: Due to an Open Circuit	N/A	Open circuits not considered in 6850/1011989 as discussed in 9.5.2
	3.5.2.2: Due to a Short-to-Ground	9.5.2	
	3.5.2.3: Due to a Hot Short	9.5.2	
	3.5.2.4: Due to Inadequate Circuit Coordination	3.5.4	Covered in "Fire PRA Cable Selection" chapter
	3.5.2.5: Due to Common Enclosure Concerns	3.5.4	Covered in "Fire PRA Cable Selection" chapter

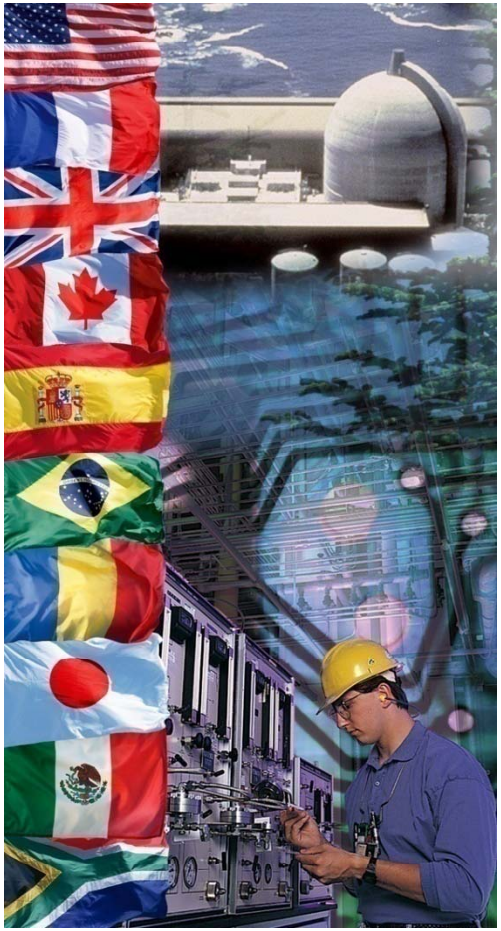

EPRI/NRC-RES FIRE PRA METHODOLOGY

Task 10 - Circuit Failure Mode Likelihood Analysis

Dan Funk – Edan Engineering Corp.
Gabriel Taylor – U.S. NRC
Office of Nuclear Regulatory Research

Joint RES/EPRI Fire PRA Training Workshop
San Diego, CA, August 2011 and
Jacksonville, FL, November 2011

A Collaboration of U.S. NRC Office of Nuclear Regulatory Research (RES) & Electric Power Research Institute (EPRI)

CIRCUIT FAILURE MODE LIKELIHOOD ANALYSIS
Purpose & Scope (per 6850/1011989)

The Circuit Failure Mode Likelihood Analysis Task is intended to:

- Establish first-order probability estimates for the Circuit Failure Modes of interest

AND

- Correlate those Failure Mode Probabilities to specific components

CIRCUIT FAILURE MODE LIKELIHOOD ANALYSIS
Corresponding PRA Standard Element

- Primary match is to element CF – Circuit Failures
  - CF Objectives (as stated in the PRA standard):

    "[T]o

    (a) refine the understanding and treatment of fire-induced circuit failures on an individual fire scenario basis

    (b) ensure that the consequences of each fire scenario on the damaged cables and circuits have been addressed"

CIRCUIT FAILURE MODE LIKELIHOOD ANALYSIS

HLRs (per the PRA Standard) – CF element

- HLR-CF-A: The Fire PRA shall determine the applicable conditional probability of the cable and circuit failure mode(s) that would cause equipment functional failure and/or undesired spurious operation based on the credited function of the equipment in the Fire PRA. (2 SRs)

- HLR-CF-B: The Fire PRA shall document the development of the elements above in a manner that facilitates Fire PRA applications, upgrades, and peer review. (1 SR)

CIRCUIT FAILURE MODE LIKELIHOOD ANALYSIS

NEI 00-01, Rev. 2, Section 5.2.1.2 – Probability of Spurious Actuation

- NEI 00-01, Rev. 2, "Guidance for Post-Fire Safe Shutdown Circuit Analysis," May 2009.
- Generally follows Option #1 of the Task 10 methodology in NUREG/CR-6850, EPRI TR 1011989.
- Recommends the use of spurious actuation probability point estimates from:
  - Table 2.8.3 in NRC Inspection Manual 0609, Appendix F ("FP SDP")
  - Tables 7.1 and 7.2 from EPRI Report 1006961 ("Expert Elicitation")

CIRCUIT FAILURE MODE LIKELIHOOD ANALYSIS
Introduction (1) (per 6850/1011989)

- This is a Probabilistic Based Analysis
- Two methods presented
  - Expert Panel results (“Look-Up Tables”)
  - Computation-based analysis (“Formulas”)
- Requires knowledge about circuit design, cable type and construction, installed configuration, and component attributes
- Generally reserved for only those cases that cannot be resolved through other means

CIRCUIT FAILURE MODE LIKELIHOOD ANALYSIS
Introduction (2)

- Caveats:
  - Our knowledge is greatly improved but uncertainties are still large
    - Very limited data for many issues
  - For this reason, implementing guidance is intended to be conservative
  - Practical implementation is challenging
  - Further analysis of existing test data and follow-on tests would be beneficial:
    - Reduce uncertainties, including conservatisms as appropriate
    - Solidify key influence factors
    - Incorporate time as a factor (FAQ 08-0051, for AC circuits only; Status: Closed)
    - Incorporate "End-Device" functional attributes and states (e.g., latching circuits vs. drop-out design)
    - Expert elicitation to produce refined spurious operation probabilities (Ongoing CY11)
  - Computation-based method (formula) is an extrapolation of existing data; validation remains to be done. Conservatism has not been established.
- Probabilities of sufficient quality to move ahead

CIRCUIT FAILURE MODE LIKELIHOOD ANALYSIS
Introduction (3)

- Public and Peer Review Comments
  - Several questions involving interpretation of the EPRI Test Data led to extensive discussions regarding the most appropriate way to tally spurious actuation probabilities (many subtleties for implementation)
  - Team's consensus is that Expert Panel Values are, in general, somewhat conservative
  - Additional independent review of the Computational Method was solicited as a result of Peer and Public Comments
    - Review was favorable, however the team acknowledges the inevitable limitations of the methodology

CIRCUIT FAILURE MODE LIKELIHOOD ANALYSIS
Introduction (4) – Related FAQ

- FAQ 08-0051 Hot Short Duration
  - Issue:
    - No guidance on the duration of hot shorts is provided in 6850/1011989
    - Hot shorts can produce undesirable conditions for Fire PRA components (e.g., pumps and valves)
    - The duration of a hot short is important since the affected component may be unable to perform its credited function and recovery may be delayed until the hot short is cleared
    - The clearing of the hot short may cause the component to return to its desired state or manual actions may be required to recover the equipment and its associated function
  - General approach to resolution:
    - A statistical analysis of the NEI/EPRI and CAROLFIRE test data was performed and resulted in a Weibull distribution model
    - The model predicts the probability of the duration of a spurious actuation from a hot short lasting greater than or equal to time, t, in minutes to be

      $$\mathbf{P}(T \geq t) = \exp(-\lambda t^{\beta})$$

      where, $\lambda = 0.963$ and $\beta = 0.579$,

      and $\mathbf{P}(T \geq 15 \text{ minutes}) = 0.01$
    - See A. Klein (NRR), AFPB File Memorandum, April 1, 2010, "Closure of National Fire Protection Association 805 Frequently Asked Question 08-0051 Hot Short Duration" (ML100900052) for additional details and <u>limitations of use</u>
  - Status:
    - Closed

CIRCUIT FAILURE MODE LIKELIHOOD ANALYSIS
Assumptions

The following assumptions form the basis for Task 10:

- Specific cable/circuit configuration attributes are available or can be determined
- The equipment is in its normal position or operating condition at the onset of the fire
- Users of this procedure are knowledgeable and have experience with circuit design and analysis methods and probability estimating techniques
- This analysis method is applied to cables with no more than 15 conductors

CIRCUIT FAILURE MODE LIKELIHOOD ANALYSIS
Process

- The Task 10 procedure is subdivided into four (4) primary steps:

  Step 1: Compile and Evaluate Prerequisite Information and Data

  Step 2: Select Analysis Approach

  Step 3: Perform Circuit Failure Mode Probability Analyses

  Step 4: Generate Circuit Failure Mode Probability Reports

CIRCUIT FAILURE MODE LIKELIHOOD ANALYSIS
Task Interfaces - Inputs

- Fire PRA Cable List (Task 3)
- Fire PRA Database (Support Task B)
- Results of Detailed Circuit Failure Analysis (Task 9)
- Specific Scenarios Identifying Affected Cables (Tasks 11 & 14)
- Cable & Circuit Configuration Attributes
- Plant Drawings

CIRCUIT FAILURE MODE LIKELIHOOD ANALYSIS
Task Interfaces - Outputs

- Quantification of Fire Risk (Task 14)
- Post-Fire HRA (Task 12)
- Detailed Fire Scenario Quantification (Task 11)
- Circuit Failure Mode Probability Reports
- Component Work Packages (Finalized)
- Fire PRA Database & Model

CIRCUIT FAILURE MODE LIKELIHOOD ANALYSIS
Step 1 - Compile Prerequisite Information

Ensure that prerequisite information and data are available and usable before beginning the analyses.

- Confirm completion of Detailed Circuit Analysis for components of interest
- Collect important cable and configuration attribute information:
  - Insulation
  - Number of conductors
  - Raceway types
  - Power source(s)
  - Number of Source & Target conductors (for Option #2 only)

CIRCUIT FAILURE MODE LIKELIHOOD ANALYSIS
Step 2 - Select Analysis Approach

Decide which analysis option is best suited for conducting the evaluation.

1. Select Failure Mode Probability Estimate from Look-Up Tables
   - Grounded circuit design
   - Non-complex control circuit
   - Single component service
   - Cable configuration matches Look-Up Table categories
   - Principal failure mode of concern is Spurious Actuation
2. Calculate Probability Estimate using Formulas
   - Ungrounded or resistance-grounded circuit design
   - Complex circuit or component
   - Failure potentially affects multiple components
   - Cable configuration not easily categorized in Look-Up Tables

- Corresponding PRA Standard SRs: CF-A1

CIRCUIT FAILURE MODE LIKELIHOOD ANALYSIS
Step 3 - Estimate Circuit Failure Mode Probabilities

Estimate Circuit Failure Mode Probabilities employing the selected method:

Option #1: Failure Mode Probability Estimate Tables

- Table 10-1, Thermoset Cables with CPTs
- Table 10-2, Thermoset Cables without CPTs
- Table 10-3, Thermoplastic Cables with CPTs
- Table 10-4, Thermoplastic Cables without CPTs
- Table 10-5, Armored or Shielded Cables

Option #2: Computational Probability Estimate Formulas

$$P_{CC} = (C_{Tot} - C_G) / [(C_{Tot} - C_G) + (2 \times C_G) + n]$$

$$CF = \{C_T \times [C_S + (0.5 / C_{Tot})]\} / C_{Tot}$$

$$P_{FM} = CF \times P_{CC}$$

- Corresponding PRA Standard SRs: CF-A1, A2
- Corresponding NEI 00-01, Rev. 2, Section: 5.2.1.2 (Option #1 only)

CIRCUIT FAILURE MODE LIKELIHOOD ANALYSIS
Step 3 – Related FAQ

- FAQ 08-0047 Cable Dependency
  - Issue:
    - Guidance (Vol. 2, Page 10-7, Bullet 3) states that when more than one cable can cause the same spurious actuation you combine probabilities using “exclusive or” (XOR)
    - This assumes faults/effects are independent
  - General approach to resolution:
    - Consensus reached that “exclusive or” is not appropriate if faults are dependent (e.g., a common power supply for both cables)
    - Clarify treatment to determine and address dependency
  - Status:
    - Closed

CIRCUIT FAILURE MODE LIKELIHOOD ANALYSIS
Step 4 - Generate Failure Mode Probability Reports

- Enter results into the Fire PRA Database
- Generate Circuit Failure Mode Probability Reports
  - Listing the Probability Estimates for the Circuit Failure Modes of Concern for Each Component of Interest by Plant Area (Compartment, Fire Area, Fire Zone, etc.)
- Corresponding PRA Standard SRs: CF-B1

CIRCUIT FAILURE MODE LIKELIHOOD ANALYSIS
Example – Simple AOV/SOV Control Circuit

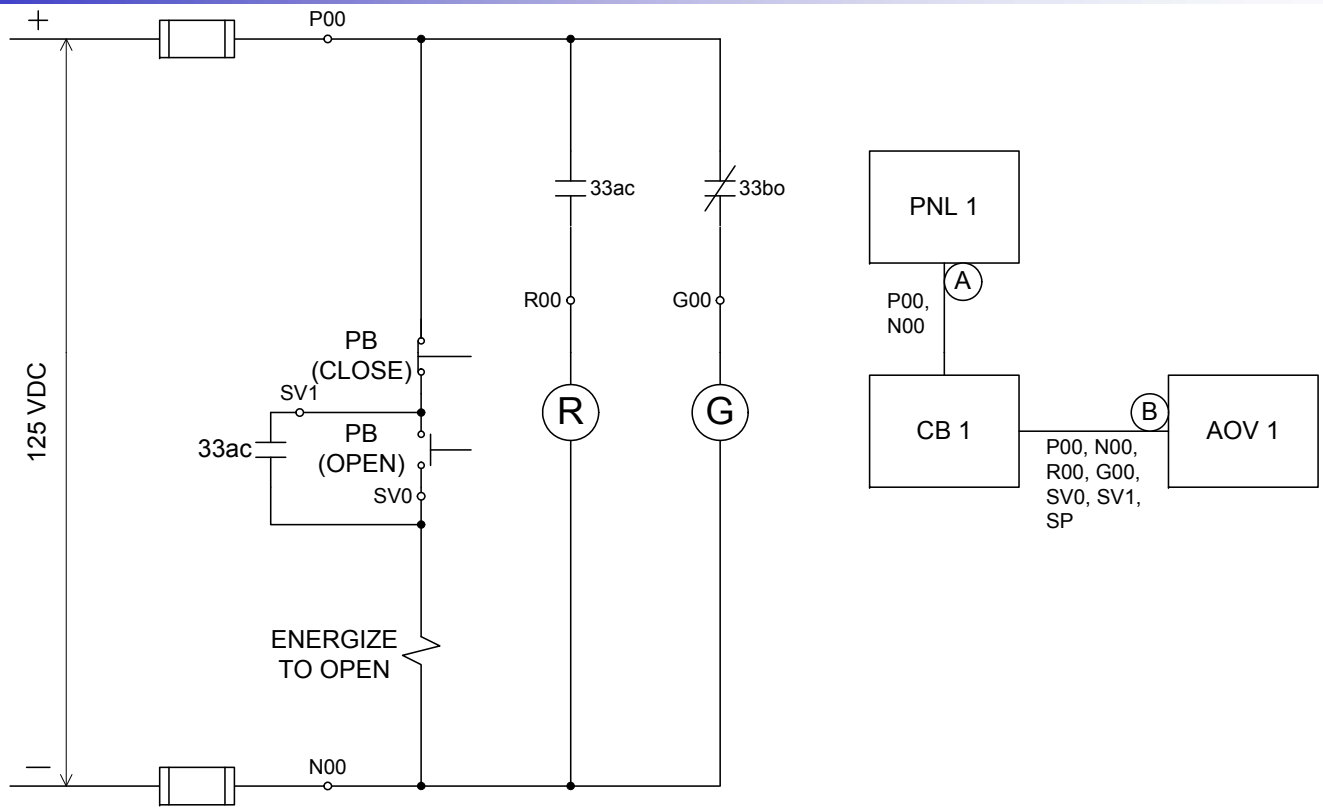

QUESTION: What is the *probability* that damage to Cable B will result in spurious opening of the AOV?

See next slide →

CIRCUIT FAILURE MODE LIKELIHOOD ANALYSIS
Example – Step 1: Prerequisite Information

- Detailed circuit analysis completed & documented? ***Yes***

Cable	+125 VDC Hot Probe	-125 VDC Reference Ground Probe
A	LOP-FB	LOP-FB
B	LOP-FB, EI-HS, SO-HS	LOP-FB, LOC

- Collect important cable and configuration data:
  - Cable insulation? ***Thermoset***
  - Number of conductors? ***Seven***
  - Raceway type? ***Tray***
  - Power source? ***Ungrounded DC bus (no CPT)***
  - Number of source & target conductors? ***3 sources, 1 target***

See next slide →

CIRCUIT FAILURE MODE LIKELIHOOD ANALYSIS
Example – Step 2: Select Analysis Approach

- Option #1: Failure Mode Probability Tables
  - Grounded circuit design? ***No***
  - Control circuit cable? ***Yes***
  - Single component circuit? ***Yes***
  - Known cable configuration? ***Yes***
  - Spurious actuation concern? ***Yes***
- Option #2: Computational Probability Estimate
  - Ungrounded circuit? ***Yes***
  - Complex circuit/component? ***No***
  - Multiple component circuit? ***No***
  - Cable configuration not categorized? ***No***

For this example, we'll show both methods

See next slide →

CIRCUIT FAILURE MODE LIKELIHOOD ANALYSIS
Example – Step 3: Perform Analysis (1)

- Option #1:
  - Which Table to Use? ***Table 10-2, Thermoset Cable without CPT***

Raceway Type	Description of Hot Short	Best Estimate	High Confidence Range
Tray	M/C Intra-cable 1/C Inter-cable M/C → 1/C Inter-cable M/C → M/C Inter-cable	0.60 0.40 0.20 0.02 – 0.1	0.20 – 1.0 0.1 – 0.60 0.1 – 0.40
Conduit	M/C Intra-cable 1/C Inter-cable M/C → 1/C Inter-cable M/C → M/C Inter-cable	0.15 0.1 0.05 0.01 – 0.02	0.05 – 0.25 0.025 – 0.15 0.025 – 0.1

  - SO Probability Estimate, **P** = <u>0.62</u> (0.60 + 0.06 – 0.60*0.06)

See next slide →

CIRCUIT FAILURE MODE LIKELIHOOD ANALYSIS
Example – Step 3: Perform Analysis (2)

- Option #2:
  - Calculate probability of a conductor-to-conductor short:

$$P_{CC} = (C_{Tot} - C_G) / [(C_{Tot} - C_G) + (2 * C_G)]$$

$$P_{CC} = (7 - 1) / [(7 - 1) + (2 * 1)]$$

$$P_{CC} = 6 / [6 + 2]$$

$$P_{CC} = 0.75$$

  - Determine cable configuration factor:

$$CF_{SO} = \{C_T * [C_S + (0.5 / C_{Tot})]\} / C_{Tot}$$

$$CF_{SO} = \{1 * [3 + (0.5 / 7)]\} / 7$$

$$CF_{SO} = 3.071 / 7$$

$$CF_{SO} = 0.44$$

  - Probability of spurious actuation, $\mathbf{P}_{SO} = 0.75 * 0.44 = \underline{0.33}$

CIRCUIT FAILURE MODE LIKELIHOOD ANALYSIS
Example – Step 4: Failure Mode Probability Report

Failure Code	Estimated Probability (Calculated)	Estimated Probability (From Table 10-2)
SO-HS	0.33	0.62

CIRCUIT FAILURE MODE LIKELIHOOD ANALYSIS
Recommended Step-by-Step Process for Task 10 Analyses

1. Determine appropriate option for estimating failure mode probability:
   a) Grounded circuit?
   b) Simple circuit design?
   c) Single affected component?
   d) Cable configuration compatible with an Expert Table (Ref. EPRI TR 1011989 – NUREG/CR-6850, Vol. 2, Tables 10-1 through 10-5)?
   e) Spurious actuation is failure mode of concern?

- If all answers (a through e) are "**Yes**," then use appropriate Look-Up Table values – Option #1
- If all answers are "**No**," then use formula method – Option #2
- If answers are a mix of "Yes" and "No," then use best engineering judgment for the specific cable/circuit being analyzed to select the appropriate option.

2. If multiple cables for equipment can result in the same failure mode, then logically combine the probability values (XOR)
   a) If the multiple cables can also fail such that power to the circuit is cut off, then only use the highest probability value determined for the cable set (Ref. FAQ 08-0047)

CIRCUIT FAILURE MODE LIKELIHOOD ANALYSIS
Questions

Any Questions?

CIRCUIT FAILURE MODE LIKELIHOOD ANALYSIS

Mapping HLRs & SRs for the CF technical element to NUREG/CR-6850, EPRI TR 1011989

Technical Element	HLR	SR	6850/1011989 Sections that cover SR	Comments
CF	A	The Fire PRA shall determine the applicable conditional probability of the cable and circuit failure mode(s) that would cause equipment functional failure and/or undesired spurious operation based on the credited function of the equipment in the Fire PRA.		
		1	10.5.2, 10.5.3	
		2	10.5.3	
	B	The Fire PRA shall document the development of the elements above in a manner that facilitates Fire PRA applications, upgrades, and peer review.		
		1	9.5.3, 10.5.3	Also covered in "Detailed Circuit Failure Analysis" chapter

CIRCUIT FAILURE MODE LIKELIHOOD ANALYSIS

Mapping NEI 00-01, Rev. 2, Risk Significance Analysis to NUREG/CR-6850, EPRI TR 1011989

NEI 00-01, Rev. 2, Section	NEI 00-01 – Probability of Spurious Actuation	6850/1011989 Sections that cover step	Comments
5 – Risk Signifi-cance Analysis	5.2.1.2	10.5.3	NEI 00-01, Rev. 2, only recommends use of tables to determine spurious actuation probability estimates. NUREG/CR-6850, EPRI TR 1011989 also offers formula method.

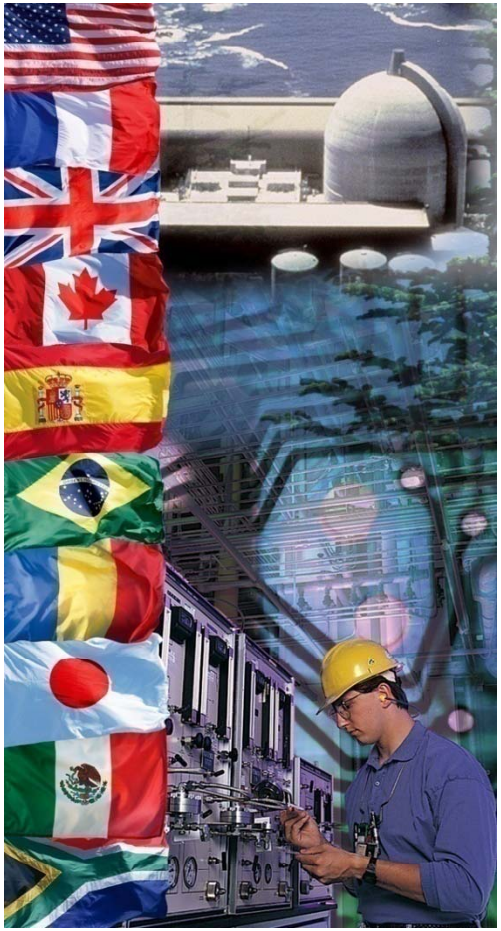

EPRI/NRC-RES FIRE PRA METHODOLOGY

Support Task B - Fire PRA Database

Dan Funk – Edan Engineering Corp.
Gabriel Taylor – U.S. NRC
Office of Nuclear Regulatory Research

Joint RES/EPRI Fire PRA Training Workshop
San Diego, CA, August 2011 and
Jacksonville, FL, November 2011

A Collaboration of U.S. NRC Office of Nuclear Regulatory Research (RES) & Electric Power Research Institute (EPRI)

FIRE PRA DATABASE
Purpose & Scope

- Identify Required Database Functionality
- Assess Capability of Existing Systems
- Implement Structured Process to Obtain the Required Database Capability
- New Software and Data Management Tools are Finding Their Way Into the Market

FIRE PRA DATABASE
Introduction

- Task is Distinctly Different from Other Tasks

- Essential Element of PRA
  - Proposed methods require manipulation and correlation of large amounts of data
  - Must be efficient and user friendly for effective implementation
  - Manual analysis not practical

FIRE PRA DATABASE
Step 1.1 - Database Functional Criteria

- Data Input Criteria
  - In what shape and format is existing data?
  - How and who will entered and control data?
  - Will data be shared by separate groups? If so, who can change data?

- Data Output Criteria
  - Define required output reports
  - Define sort and query options
  - Establish electronic data transfer requirements

FIRE PRA DATABASE
Step 1.2 - Database Structure (Example A)

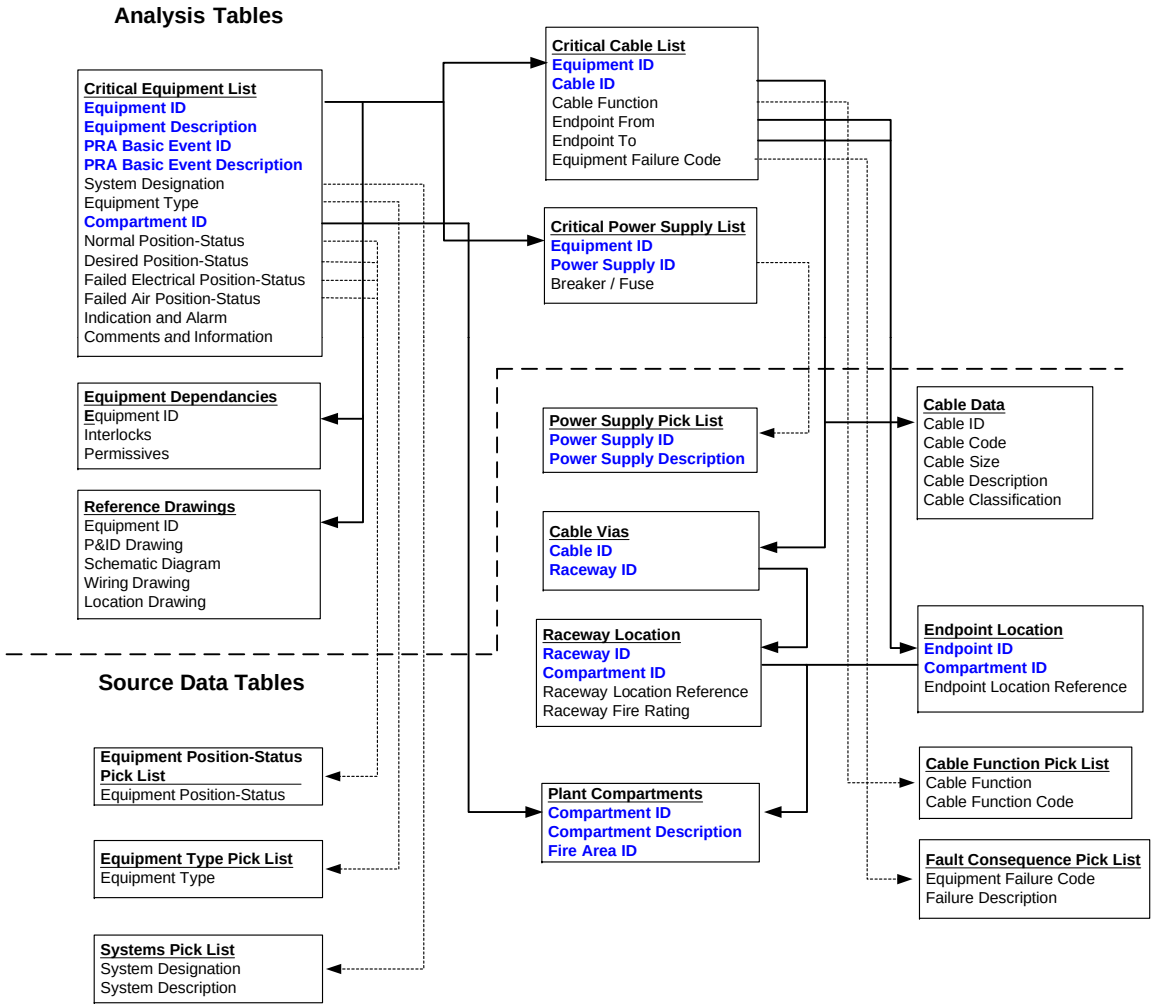

FIRE PRA DATABASE
Step 1.2 - Database Structure (Example A)

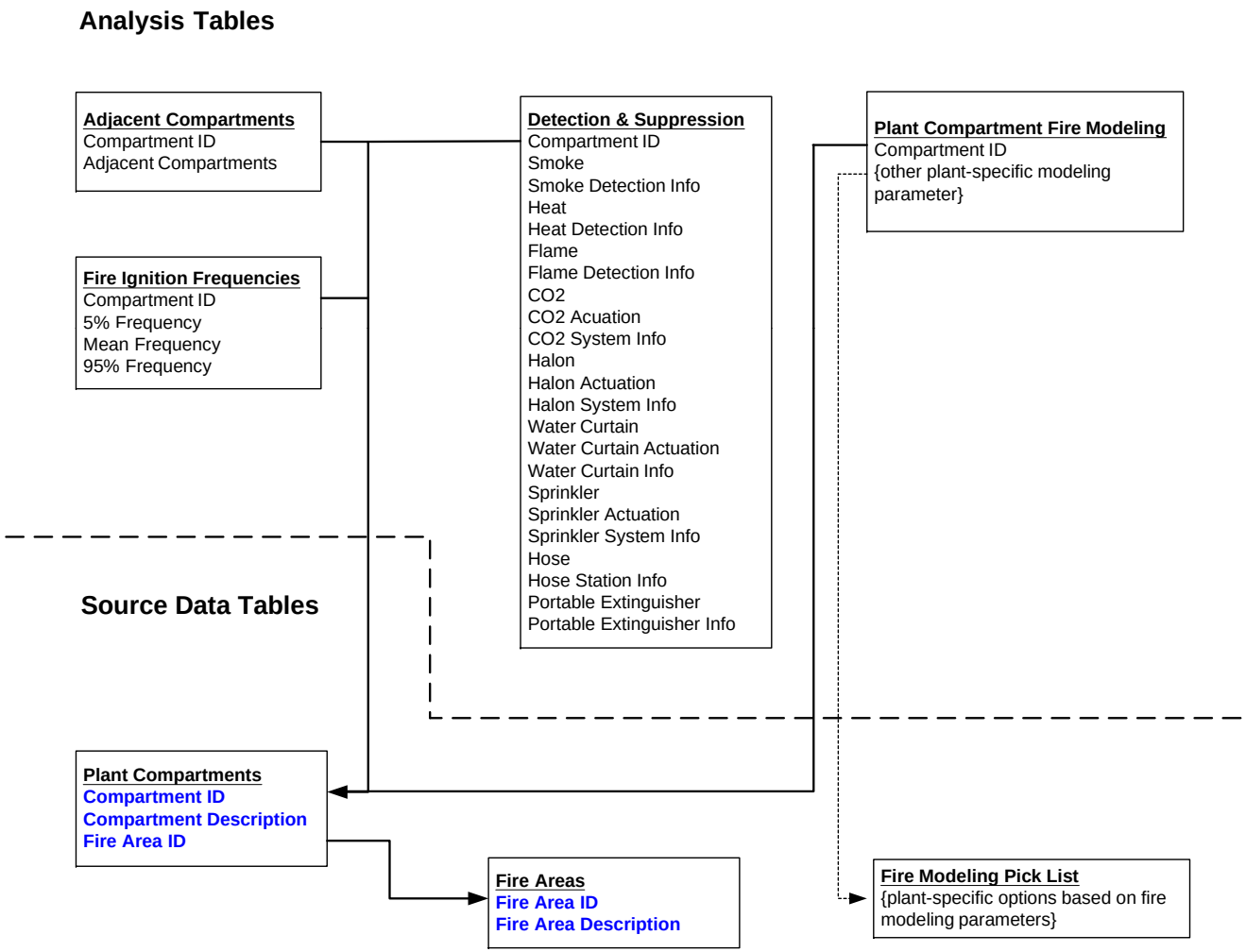

FIRE PRA DATABASE

Step 1.2 - Database Structure (Example B)

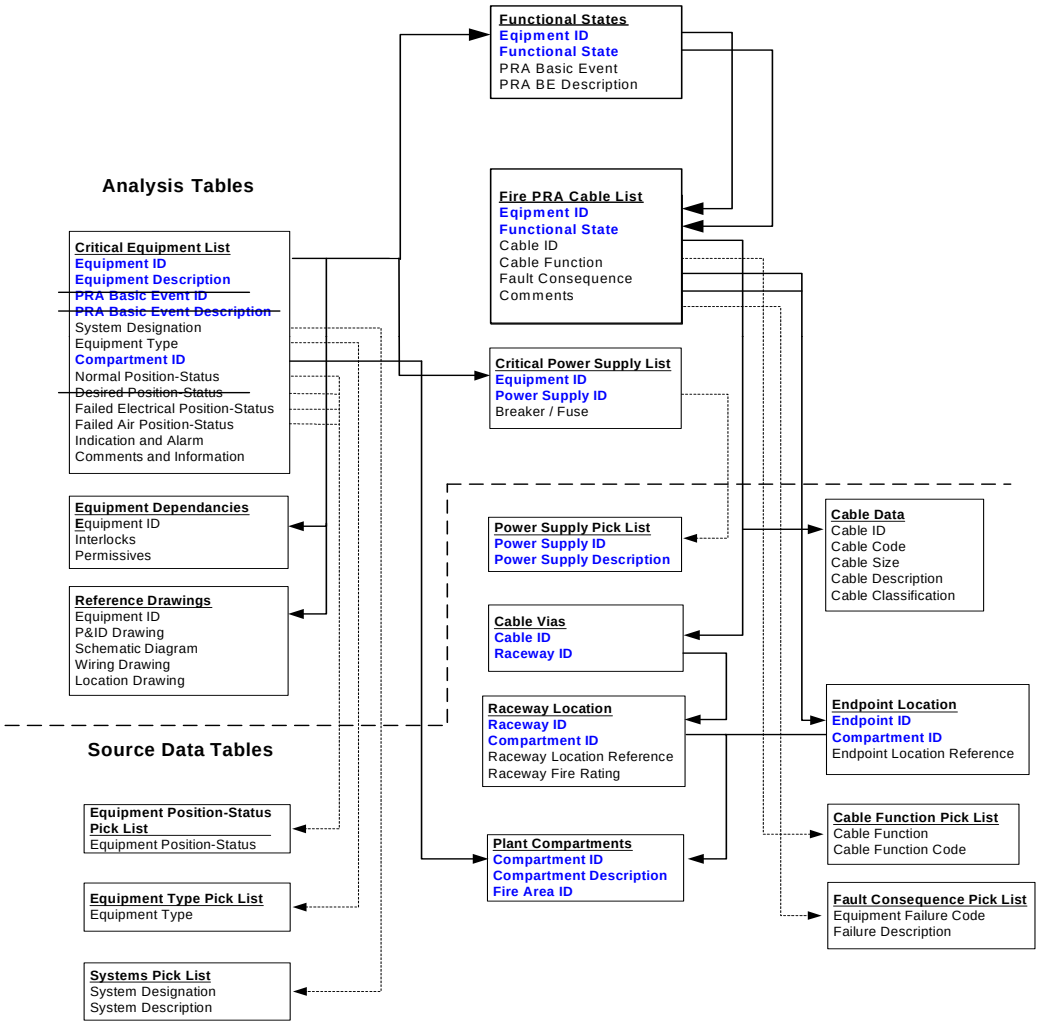

FIRE PRA DATABASE
Step 2 - Database Platform

- Decide on Platform for Database
  - Existing system
  - New stand alone system
  - Upgrade existing system
  - Combination of existing and new
- Vendors are Responding to the Call for New and Improved Software Functionality
  - Highly integrated solutions are emerging as the standard for NFPA 805 plants
  - Seamless link to Fire PRA software is just now emerging as a viable production tool

FIRE PRA DATABASE
Step 3 - Database Augmentation Plan

- Augmentation Plan is Based on the Results of Step 2
- Formalize Process for Upgrades/Changes
- Determine Necessary Resources
  - This effort can innocently affect many plant organizations
  - The cost, resources, schedule, training, procedural changes and overall impact of major software changes **ALWAYS** seems to be underestimated
- Involve IS/IT Department from the Beginning

FIRE PRA DATABASE
Step 4 – Implement Database Upgrades

- Have a Clear Plan **BEFORE** Beginning any Significant Work
- Consider Long-Term Maintainability
- Plan for De-bugging and Test Runs
- Do Not Overlook Data Integrity and Configuration Control Features
- Determine All Affected Users and Involve Them Early
- The Days of “Rogue” PRA Databases are Gone!

FIRE PRA DATABASE
Questions

Questions?