NOTES:

1. ALL MOTOR OPERATED VALVES SHALL HAVE MANUAL OPERATION HANDWHEELS.

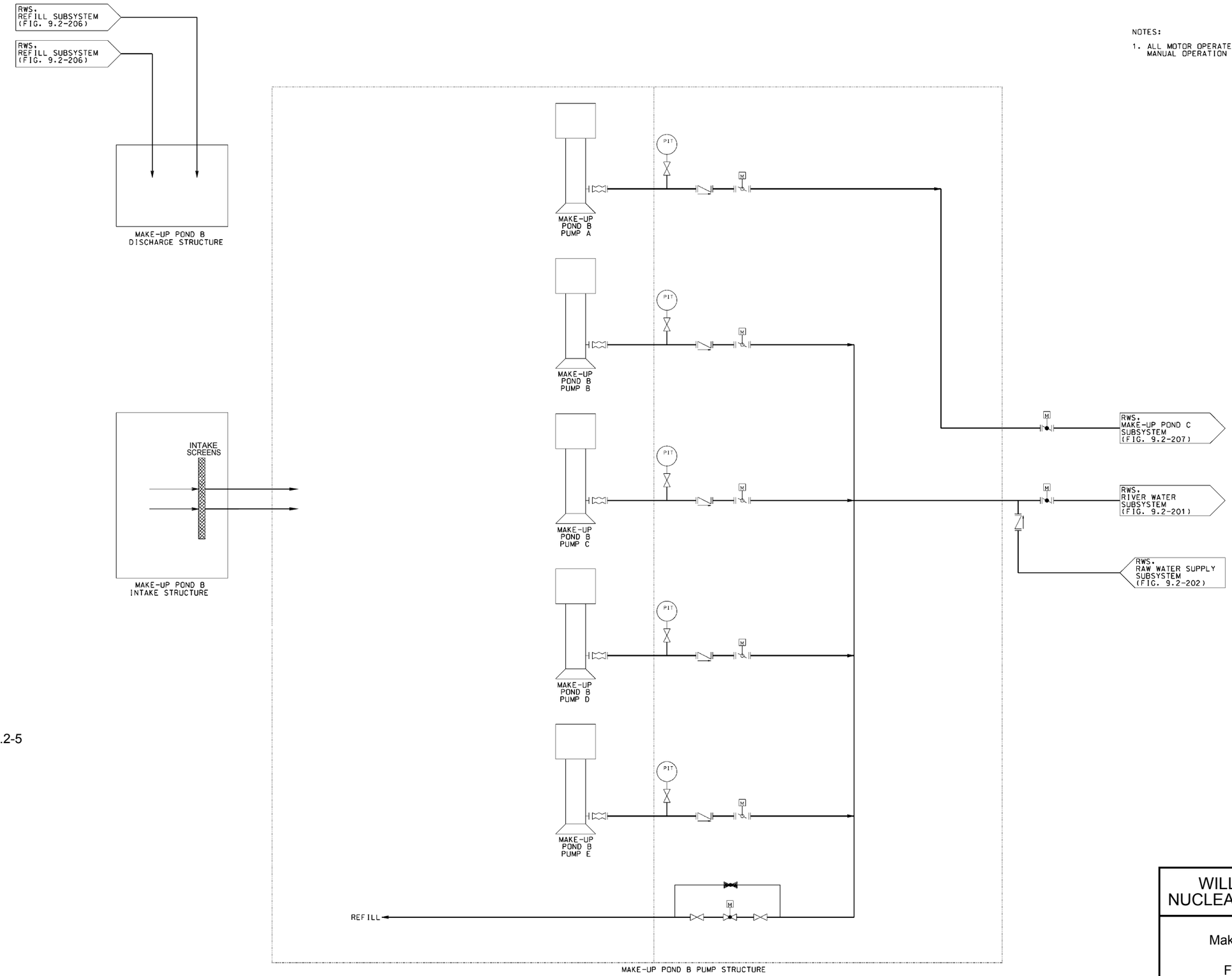

WLS SUP 9.2-5

WILLIAM STATES LEE III
NUCLEAR STATION UNITS 1 & 2

Raw Water System,
Make-Up Pond B Subsystem

FIGURE 9.2-203 Rev 3