9.0 GENERATOR, EXCITER, AND VOLTAGE REGULATION

This chapter presents the major components of the electrical generator, the exciter, and the voltage regulator and explains how they relate to the development of power by the diesel engine driven generator unit.

Learning Objectives

As a result of this lesson, you will be able to:

1. Describe the functions of the generator, exciter, and voltage regulator.

2. Identify the major components of the generator and how they inter-relate.

3. Describe how diesel engine output power relates to the power demands of the generator.

4. Describe the function of the excitation system and the associated voltage regulator.

5. Identity the major components of the exciter and voltage regulator system.

9.1 Generator Principles

The following is a brief discussion of generator operation and its relationship to the mechanical load placed on the diesel engine.

9.1.1 Electromagnetic Induction

Electromagnetic induction, the basic principle of generator operation, involves the movement of an electrical conductor through a magnetic field. Figure 9-1 shows the principles being discussed in this section. As the conductor passes through the magnetic field, in this case downward, it cuts each of the lines of magnetic force (flux) which causes a current to be "induced" in the conductor. Because the conductor has a resistance, it is known from 'ohms law' that the voltage is equal to the current times the resistance. Therefore, a voltage is also 'induced' between the two ends of the conductor. If the conductor is connected to a closed electrical circuit, this voltage would cause a current to flow. The amount of current flow is a function of the voltage induced and the electrical resistance of the load in the circuit.

9.1.2 Induced Voltage

The actual voltage induced in the conductor is determined by the number of lines of flux cut per unit of time. Two key factors affect the magnitude of voltage induced.

- The speed at which the conductor moves through the fixed magnetic field and the strength of the magnetic field determine the output voltage. This speed is a function of the rotational speed (RPM) of the generator/engine. As the speed of the engine the generator increases, the voltage produced also increases.

  Since the operating speed of the engine and generator is constant in order to maintain the desired frequency, another method of voltage control must be employed.

- Generator output voltage is most often

controlled by regulating the strength (flux intensity) of the magnetic field. This is accomplished by the generator excitation system. The excitation system monitors the generator output and regulates the magnetic field to maintain the desired voltage. As the load on the generator is increased, an increase in current flow causes the voltage to drop. The excitation system senses this decrease in voltage and increases the strength of the magnetic field to return the voltage to the desired level.

9.1.3 How the generator works

Figure 9-2 shows the principles discussed above implemented into a machine to produce a voltage. In this implementation, a ‘U’ shaped form is provided with a ‘gap’ between the open ends of the ‘U’. A coil of wire is wrapped about the legs of this form to produce a magnetic field across the gap. In the gap, an armature is formed by a loop of wire. The loop exits the armature onto two slip rings. The slip rings are contacted by brushes that connect the generator to the outside electric circuit. An engine or some other prime mover is connected to the armature causing it to rotate inside the gap. When the ‘field’ coil is energized to establish a magnetic field/flux in the gap and the armature is then rotated, a voltage is generated in the armature. The slip rings and brushes conduct this voltage out to some load "A."

Figure 9-3 shows a blowup of the armature in the gap. As the armature is rotated in its initial position, no voltage is created because the magnetic flux is equal but opposite on both branches of the loop. This is shown in the part of the diagram labeled 'Start.' As the armature is turned to a position 90 degrees from the first, the two ends of the loop is acted upon in a manner wherein the voltages generated at each end of the loop are additive, as shown in the '1/4-cycle' diagram. Peak output voltage is generated at each cycle point. As the armature continues to rotate, it again gets to a position of no voltage generation, shown in the ‘½-cycle diagram’. As the rotation continues, a voltage is again generated. A close examination of the wiring out of the armature reveals that the connections have become inverted. This results in the opposite polarity of voltage.

The diagram at the bottom of the figure shows the resulting build-up and decay and opposite polarity build up and decay again through two cycles (two rotations of the armature). The resulting voltage build-up and decay forms a sinusoidal wave that is defined as 'Alternating Current' or AC.

This is the basis for a single phase alternator. Two other sets of coils offset by 120 degrees and connected to slip rings would form a machine to generate 3-phase AC power. This is the basis for all AC 3-phase generation.

If instead of using two slip rings a single ring that is split into two segments were used, as the armature rotated, there would be a buildup and decay of voltage as before; but the split slip ring would reverse the connection on each half revolution. The split slip ring configuration is commonly referred to as a 'commutator.' This would result in a machine that puts out a pulsating DC current. By combining a great many poles and the same number of segments

on the armature commutator, an almost steady DC output would be produced. This is the principle of the DC generator or motor.

The AC alternator described above has a number of problems. The armature and its slip rings have to handle all the load current that is produced by this generator. The brushes and slip rings restrict the amount of current that can be handled. To eliminate this problem, design and construction were changed such that the small excitation current now goes through the brushes and slip rings to the rotating armature field. The large AC current induced into the stationary stator windings is transmitted to the loads by solid connections. This same principle also applies to AC synchronous motors as there is little difference between an AC generator and an AC synchronous motor. It is a matter of what is driving the system – an electric motor or an engine-driven generator.

This also simplifies the construction of the generator. These machines very often also are called 'alternators' in as much as the voltage and current are alternating. A three-phase generator/alternator is simply three single phase machines interlaced with one another, sharing the same rotor assembly, with wiring brought out to connect each phase into the electrical system. The result of the interlacing of the alternator windings is shown on the voltage trace shown at the bottom of Figure 9-4.

The upper part of Figure 9-4 shows how the current of each/any phase acts to produce the power. The left-most diagram shows the current in phase with the voltage. This is the case when the power factor is 1.0 (unity). The real power (KW) in that case is equal to the apparent power (KVA). These terms will be discussed later. When the current is not in phase with the voltage, there is a lesser power factor, and the KW is less than the KVA. The KW is still in phase with the voltage, but the KVA has shifted slightly due to the shift in the current. This introduced KVAR, and will be explained later.

9.2 Generator Construction

Figure 9-5 shows a cutaway of a typical generator. The generator consists of a shaft on which is mounted a hub, more often called the spider. The spider may be attached to the shaft by a press fit, with or without keys, or by a flange and bolting. The spider has slots into which the field pole pieces are attached. Together, this makes up the ‘rotor’. The rotor assembly usually also includes slip rings used to convey the field current into the field windings. These windings are wrapped around the pole pieces. A view of a rotor and shaft assembly is shown in Figure 9.7.

The stator core consists of a special steel stampings, called laminations, with slots to hold the stator windings. The stator core has spaces between some of the laminations through which air is force by fans on the rotor assembly. This is to provide cooling for the stator core and the windings. A steel framework supports and aligns the stator core assembly. The steel framework also usually supports the bearings of the generator. Some generators are supplied with two dedicated bearings, one at each end of the generator rotor assembly. Others are supplied with

an outboard bearing at the far end of the generator; the engine end bearing supports the other end of the generator.

The wiring in the stator slots is grouped in sections. The number for each phase matches the number of poles on the rotor. These various sections are wired together around the periphery of the stator. The end of these groups are gathered together and brought out to the generator electrical connection box.

Figure 9-6 shows an assembled generator, ready for installation to an engine. This particular machine has a shaft driven exciter unit, the smaller diameter cylinder shown on the end of the generator. Figures 9-6 through Figure 9-22 show various parts and aspects of the assembly of the parts of the generator.

9.3 Generator Terminology

9.3.1 Generator Frequency

Another key element in the output of the generator is the frequency. Frequency is a function of the rotational speed (RPM) of the engine and the number of poles (magnetic fields) in the generator as shown in the following equation. As the operating speed of the engine and generator is reduced, the number of poles must be increased to achieve 60 hertz. An EDG operating at 450 RPM would require twice as many poles as a unit operating at 900 RPM. Once designed, the number of poles in an alternating current (AC) machine is fixed.

$$F = \frac{N \cdot P}{120}$$

F is frequency in hertz (Hz)
P is the number of poles
N is the generator speed (RPM)

As a short cut, for 60 Hz power generators, N = 7,200 / P and, therefore, P = 7,200 / N

All generators have an even number of poles. An engine running at 900 rpm would have 8 poles on its generator to produce 60 Hz power.

9.3.2 Mechanical Loading

As the electrical conductors move through the magnetic field of the generator, an opposing magnetic field is created around the conductors. This opposing field resists the movement of the conductors through the generator magnetic field. The physical force, or power, provided by the diesel engine must be sufficient to overcome the resistance of the opposing field in order to achieve the desired voltage and frequency.

As the load on the generator increases in the form of an increase in current demand, the excitation system increases the density of the magnetic flux by increasing the current in the generator field. This increases the resistance to movement of the conductors through the field. As a result, the generator induced voltage decreases momentarily until the excitation system compensates to return the voltage to its previous level. Since the load was increased with relatively constant voltage, the output current (and hence, output power) of the generator must increase. This power demand is also felt on the diesel engine which is trying to maintain the speed constant as the load from the generator increases.

9.4 Generator Control

Alternating current (AC) generators of this type are driven by high horsepower diesel engines in nuclear applications, which require stable and accurate means of control. Licensee Technical Specifications stipulate voltage and frequency limits during fast start, sequential loading, load rejection testing, and normal operation. For a generic EDG, typical voltage and frequency limits are 4160 ± 420 volts (10%) and 60 ± 1.2 Hz (2%) respectively.

9.4.1 Frequency Control

Generator frequency control is accomplished by the engine governor sensing speed changes from the desired speed set point. The governor then adjusts the fuel to the engine as required to keep the engine operating at the desired (set point) speed.

9.4.2 Voltage Control

Large AC generators commonly use a combination Exciter-Voltage Regulation system to maintain generator field current under varying electrical loads. The basic voltage regulation system is designed to automatically regulate generator output terminal voltage within close tolerances of a specified value. The generic regulation system is a 'closed loop' feedback system in which generator output voltage is automatically compared to a reference voltage. The error signal is used to change generator excitation. The excitation is discussed in more detail in section 9.5.

The generic EDG must be capable of accepting loads assigned by the auto sequencing system while maintaining voltage above a minimum of 75% of the nominal voltage (25% voltage dip). The EDG Voltage Regulator is essential to correct the EDG output voltage. It is powered from a class 1E power supply and is tested for satisfactory operation during periodic EDG surveillance testing. If the Voltage Regulator is inoperable, the EDG is inoperable.

The generator exciter varies the strength of the generator rotor field current, either automatically during auto-sequencing or manually from the control room or EDG control cabinet.

The generic plant FSAR specifies governor and voltage regulator comparison test-ing (bench-marking) to demonstrate acceptable performance of both subsystems when experiencing major load changes. This testing is incorporated into Technical Specification surveillance items.

9.4.3 Generator Rating

For discussion involving the EDG electrical characteristics and electrical load, several parameters associated with AC machines are defined. These include real power, reactive power, apparent power, and power factor.

Generators are normally rated by the KVA they are designed to produce. This is normally at a power factor of 0.8 per NEMA 1 standards. Sometimes, the generator is rated in KW, but then the power factor must also be stated.

9.4.3.1 Real Power -- KW

Real power in an alternating current (AC) system refers to the true electrical power that is converted to mechanical energy such as a motor driving a pump. This power is measured in watts or kilowatts (kW) (or mega-watts - MW) for large electrical systems.

9.4.3.2 Reactive Power -- KVAR

Most electrical systems that undergo changes of voltage or current have either capacitance or inductance. In a DC system, these are only important during a significant change. Because AC power is continually changing (the voltage is sinusoidal), the inductance and/or capacitance become more important. Electrical power is needed in AC machinery (motors, generators, and transformers) to create the magnetic fields and voltage induction that enable these machines to operate. This 'magnetizing' power, which is 'stored' energy in the AC system, is reactive power. The current component of this power acts at 90 degrees from the real power (KW). Reactive power is measured in volt-amperes-reactive or VARs. For high voltage systems, reactive power may be measured in kilo-VARs or mega-VARs (KVAR or MVAR)

9.4.3.3 Apparent Power -- KVA

As its name implies, apparent power is the power that is 'apparently' required to be input or drawn from the AC system. Apparent power is volt-amperes, kilovolt-amperes, or megavolt-amperes (VA, KVA or MVA). It is determined by multiplying the voltage times the amperes times the square root of three for 3-phase electrical systems and then dividing the result by 1000 for KA or 1,000,000 for MVA.

9.4.3.4 Power Factor

Power factor is the ratio of Real Power (KW) to Apparent Power (KVA). It is a measure of the utilization of the input power of a system or equipment. A typical power factor for the rating of the generator, per NEMA standards, is for a power factor of 0.8 (80%).

For example, the generic plant FSAR specifies that the standby EDG be rated at 4000 KW. To provide this real power input and generate enough 'magnetizing' power for the generator rotor and stator, the generator is rated at an apparent power of 5000 KVA.

9.4.3.5 Relationship between KW, KVA, KVAR, and Power Factor

There is a relationship between the KW, KVA, KVAR, and Power Factor that allows us to calculate any one, knowing at least two others. That relationship is described by the following formulae:

$$KVA^2 = KW^2 + KVAR^2$$

$$PowerFactor\ (decimal) = \frac{KW}{KVA}$$

For power factor in percent, multiply the decimal value by 100.

Note that the relationships between KW, KVAR, and KVA is the same as that for any right triangle – The Pythagorean theorem.

Also, note that the triangular relationship between the three factors can be solved if

any two are known. This also includes the power factor in as much as the power factor gives the relationship (ratio) between the KW and KVA. So knowing KW or KVA and the Power Factor, one can get the other and from that the third.

KW is usually measured and displayed on a meter. KVA can be obtained by taking the voltage (average for the 3 phases) and the current (average for the 3 phases), multiplying them together, and then multiplying that result by the square root of 3 (1.73) for a three-phase power system, then dividing by 1000 to get the kilo-VA. KVAR may be displayed on a meter as well as Power Factor being displayed.

There is no means of directly measuring KVAR or PF other than special meters for that purpose or by calculation using the above formulas. The Power factor meter is the least accurate of any of the electrical parameter meters. It is far more accurate to solve the triangular relationship between KW and KVA as shown in paragraph 9.4.3.4.

It is convenient at this point to emphasize a principle that applies to all engine driven generator systems.

- **THE GOVERNOR ON THE ENGINE CONTROLS OR RESPONDS TO THE KW LOADING ON THE GENERATOR.**

- **THE VOLTAGE REGULATOR AND EXCITER SYSTEM CONTROLS OR RESPONDS TO THE KVA and thereby the KVAR loading.**

The two control devices are quite independent otherwise. Voltage dip is a result of generator, exciter, and voltage regulator characteristics and response. The frequency dip is a result of engine and governor characteristics and response. The engine knows nothing of the KVAR loading except as that may influence the efficiency of the generator and its relationship to the engine.

The KW loading on the generator is converted to the engine Horsepower required using the following relationship:

$$BHP(engine) = \frac{GeneratorKW \cdot 100}{0.746 * GeneratorEfficiency(\%)}$$

9.5 Excitation and Voltage Regulation

Every power generation system requires some means of controlling the voltage and/or current produced by the machine. The output of a generator is normally controlled by controlling the current in the field of the generator, the speed being constant for a set frequency. Various excitation systems are possible and all usually include some system of sensing and controlling the generator output voltage.

9.5.1 Types of Excitation Systems

Excitation systems vary from the very simplest to rather complex systems. The simplest would consist of a battery to supply excitation power to the generator field along with a rheostat to control the amount of excitation current, that being managed manually by an operator. This system is generally not acceptable; therefore, some means of automatic control is desired. It may consist of automating the rheostat such as the old

Westinghouse rocking arm Silver Stat design. It worked; it wasn't fast and had droop in the voltage regulation, but it was simple.

Most modern excitation systems involve electronics in the voltage sensing and regulation and are relatively fast and accurate. Many exciter systems consist of an excitation generator driven by the engine either directly or by a system of pulleys and belts. The excitation generator puts out the power, and a voltage regulator controls that generator's field in such a way that the main generator's field is under control.

Many commercial systems use what is termed a brushless exciter. With a brushless excitation system, an alternator/generator is mounted on the end of the generator shaft and is driven along with the main generator. A permanent magnet field excites the alternator as it rotates. The alternator output goes through a diode bridge which converts it into DC that is fed into the generator field through wires running along the shaft between the alternator's output section and the main generator field. There are no brushes in this type system, thus the term 'brushless exciter'. A control winding is included in the permanent magnet field to control the output of the exciter alternator, and thereby the main generator's field. There are a few of these systems at nuclear stations. They are not as fast and responsive as the fully electronic system that is discussed below. They are limited in power capability, and their overall response is slow because the system has to operate through two sets of magnetics the exciter alternator and the main generator field.

Most excitation systems used at nuclear power stations are either the Series Boost (SB) or the fully electronic Static Exciter Voltage Regulator (SEVR) system. These are more similar than they are different in most cases, and they will be explained by explaining the excitation system shown in Figure 9-23.

The exciter output DC voltage type is fed through bundles of slip rings into the main generator field windings.

9.5.2 Explanation of Elements of the Electronic (Static) Type Excitation System

Figure 9-23 shows the elements in the typical modern electronic excitation system. While there are differences between the Series Boost (SB) and the Static Exciter-Voltage Regulator (SEVR) systems, the basic elements are the same in both systems. Their differences will be explained as each section of the systems is explained.

Figure 9-23 shows the generator on the far left with its load lines going to the right, until they finally pass through the generator output circuit breaker and on to the loads. As each load line exits the generator, it goes through the primary side of a Power Current Transformer (PCT). The secondary side of these transformers feed power for excitation into the exciter package. Most of the modern exciter systems have these Power Current Transformers to supply some of the excitation current required by the generator field.

Properly sized PCTs, supply power for excitation in direct proportion to the load on the generator. The generator exciter system requires about 1 to 2 percent generator's output power.

As the load lines continue beyond the PCT connections, there are connections to a Power Potential Transformer (PPT). Since there is no generator output current when there is 'no load' on the generator, there must be some other source of power for generating excitation when there is no load. The PPTs supply the power for generator excitation when the generator is not loaded.

As the load lines continue beyond the PPT connection, there is another PT connection for sensing the generator output. This is fed into the Voltage Regulator section as a sense of the generator output voltage.

Beyond the sensing PT connection, there is another Current Transformer (CT) for sensing the amount of load (via the current, assuming the voltage is constant). This is used to adjust the voltage regulator's output when the unit is being paralleled to the grid (infinite bus). In order to control the reactive power component of the load current when paralleled, the voltage regulator has to receive some sense of the load on the system. This is equivalent to the droop function in the governing system. This principle is variously called 'current compensation,' 'load compensation,' 'paralleling load sensing' or 'voltage droop'. The function is usually switched out automatically when the diesel generator is in the 'emergency mode.' It is required only in parallel operation. If the circuit were left active in 'emergency mode', there would be a slight change in voltage as load is put on the unit. This is not desirable in the isolated 'emergency mode'. The terms used on the switching this control function are usually referred to as 'unit' (without current compensation) and 'parallel' (with current compensation).

The voltage regulator receives a reference signal from the operator or system which tells it the voltage to maintain. This voltage may be modified by the current compensation circuit if the exciter is set up for 'parallel' operation. In this case, the reference input of the regulator is compared to the sensed voltage input. The voltage regulator's output is changed to restore the generator output voltage back to the reference voltage input.

The output signal from the voltage regulator controls elements in the Power Section of the exciter system. This section is attached to the Power Potential Transformers. Properly sized PTs control the output voltage without the need for current compensation.

Generally there are two methods of controlling the power section. In the case of the Series Boost (SB) exciter, the transformers (PPTs) have a third (tertiary) winding. The PPTs are like normal transformers if the tertiary winding is not turned on. However, if there is current in the tertiary winding, it causes the transformers to become saturated to the point that the current transfer from the primary of the PPT to the secondary is (can be) restricted; thus, the output current can be controlled. These transformers are therefore often called 'saturable reactors'.

In the case of the SEVR type exciter, the

amount of current out of the power section is controlled by turning on or holding off the firing of silicone controlled rectifiers (SCRs) or similar electronic elements. If a large amount of power is required, the SCRs are fired early in the voltage cycle. If less power is required, the SCRs are fired later. If no power is required (in the voltage overshoot situation), the SCRs are not turned on. This is the means of controlling the no-load excitation power in such a system.

The power from the power section is sent over to the rectifier section where it is joined with the power from the PCTs. This is rectified (converted) from AC to DC (direct current) and sent on to the generator field as shown. There is usually a voltage meter and an amperage meter in the field circuit so that the field conditions can be monitored. The generator field can accept only a direct current supply. The generator acts as a fixed resistance, changed only slightly by its temperature. Therefore, the field voltage and current are proportional. This is helpful in troubleshooting some types of exciter/generator problems such as detecting a short or ground in the generator field.

There are a number of differences in some excitation techniques that are worth mentioning. In the Westinghouse and GE exciters, the power section output, and the PCT, contributions are rectified separately and joined together in the DC field circuit. In the Basler and Portec systems, the power section and PCT contributions are joined on the AC side and rectified after they are joined.

The Portec exciter is a 'shunt' type regulator. That is, all of the power generated in the exciter goes to the generator field circuit. There are SCRs that are connected in parallel with the generator field that shunt the proper amount of current around the field in order to control the current that goes through the field.

Other than these differences, most exciter systems are more alike than different, and all contain the basic elements shown in Figure 9-24.

There is generally some feedback from the exciter output section to the voltage regulator section so that the voltage regulator can anticipate what it needs to do next or if it needs to help stabilize the regulator. In most regulation systems without feedback, the systems tend to turn all the way 'on' or all the way 'off' and this is not desirable. Therefore, feedback helps the regulator know how much excitation is being put out so it can gauge that against the error and anticipate that the problem is nearly resolved, et.al.

These exciters are self-sustaining. That is, they take the power they need from the generator output. They require no external power for normal operation. But that also means that they will probably not start themselves up when required. Therefore, a means of starting the excitation process has to be provided. This is done with the 'Field Flashing' circuit, also shown on Figure 9-23. That circuit consists of a battery (maybe the station batteries) and a switch. The switch is closed when the system is signaled to start up (usually upon the engine achieving a certain speed), and the switch is opened when the voltage regulator senses that the generator voltage

has built up to a certain value (usually about 65 to 75% of rated voltage). Inside the rectifier section this circuit usually includes a diode to block reverse current from the exciter back into the batteries. Usually, some resistors are included to limit the current available from the batteries because only a small current is needed into the generator field to get generation started.

Most of the modern excitation systems have the capability of putting out an immense amount of power if needed. To sustain rated load may not take much power, but to start a large motor load may tax the generator and exciter system. Most of the modern exciters are capable of putting out about 3 to 5 times (300 to 500%) of the generator's normal full load excitation current. This is called 'field forcing'. The voltage dip caused by starting a large motor is primarily a function of the generator characteristics (specifically the transient and sub-transient reactances). However, the rate of recovery and a few percent of the voltage dip can be influenced by the response and the field forcing capability of the excitation system.

9.5.3 Brushless Excitation Systems

A brushless excitation system has the advantage of not having brushes to transmit the current to the generator field through slip rings and brushes. Figure 9-24 shows a schematic diagram of the typical brushless exciter system.

The brushless exciter system consists of an exciter generator mounted on the generator shaft, usually outboard of the generator bearing. A diode plate is attached to one side of the exciter rotor. It serves to change the AC exciter output to DC. The output is fed through a hole in the exciter shaft to the main generator. It exits after passing through the rear of the generator housing and connects to the rotating main generator field windings. There are no slip rings or brushes.

The field of the exciter generator is stationary. Its housing is mounted onto the rear end of the main generator.

Another alternator may be mounted outboard of the exciter generator. This unit would have a permanent magnet rotor, usually mounted on the back of the generator shaft. The stator winding of this alternator puts out an AC current/voltage to a voltage regulator. The voltage regulator turns that AC input into a DC output which is controlled so as to ultimately control the current into the main generator field.

If the unit does not have this permanent magnet alternator (PMA), another source of voltage for the voltage regulator must be provided. In a number of cases, that may be from a battery. In other cases, it is from the main generator output (reduced in voltage by a transformer). In this last case, since the voltage source is not available when the EDG is being started, a battery is used to 'flash' the system until the generator voltage has built up to a near rated voltage condition, similar to flashing the field on the static exciter systems discussed above.

9.5.4 Digital Voltage Regulation

The only section of the excitation system that lends itself to digital control is the

voltage regulator. While there are some advantages to digitizing the voltage regulator for the purpose of better voltage stability during isolated operation (powering the emergency bus), and of controlling reactive power (power factor) a little tighter when in parallel with the offsite power system, the effect would be small in a comparison to the existing analog systems. The voltage regulator operates basically from analog inputs and in the case of the Basler Series Boost systems (used at most plants), the output is also analog, there is little advantage to inserting digital components in between the input and output. When it comes to response to the voltage dip caused by starting large motors, that is primarily influenced by the characteristics of the generator and would not be appreciably influenced by having a faster and more complicated voltage regulator. The more components in a system, the less reliable the system becomes.

9.5.4 Digital Voltage Regulation

The only section of the excitation system that lends itself to digital control is the voltage regulator. While there are some advantages to digitizing the voltage regulator for the purpose of better voltage stability during isolated operation (powering the emergency bus), and of controlling reactive power (power factor) a little tighter when in parallel with the offsite power system, the effect would be small in a comparison to the existing analog systems. The voltage regulator operates basically from analog inputs and in the case of the Series Boost systems, the output is also analog, there is little advantage to inserting digital components in between the input and output. When it comes to response to the voltage dip caused by starting large motors, that is primarily influenced by the characteristics of the generator and would not be appreciably influenced by having a faster and more complicated voltage regulator. The more components in a system, the less reliable the system becomes.

9.6 Generator Output Breaker

Figure 9-23 also shows the main generator output beaker at the right end of the diagram. The generator output breaker connects the generator to its Class 1E emergency bus. When an emergency start signal is received, the EDG starts and comes up to rated speed and voltage. The output circuit breaker is closed automatically. An auxiliary contact on the circuit breaker provides a signal to the load sequencer to connect the emergency load in proper sequence within a time period of approximately 30 seconds.

In the event of the unit being started for surveillance testing, the output breaker is closed manually by the plant operators after bringing the unit into synchronizism with the offsite power system. The operator must closely match the frequency of the generator to that of the off- site power, with the generator slightly higher than the offsite frequency so that the unit will assume some load when the output breaker is closed. The voltage must also be closely matched but slightly high so that the KVAR loading will be outbound rather than inbound. A synchroscope is typically used to bring the unit into synchronizism, and the system may also include sync-check relays to protect the generator output

breaker from being closed with the unit not synchronized properly.

9.7 Generator Differential Protection

The generator requires very little monitoring its normal operation. The output voltage, currents, field voltage and current, stator temperatures and perhaps bearing temperature and oil level would be about the extent of the required monitoring. However, there is one item that is required by NRC regulations that must not only be monitored but if such a fault is detected, the unit must be immediately shutdown, not only the generator but the engine as well.

A system is set up to monitor the currents into the generator on the neutral side and also the currents in each phase on the output (load) side of the generator. If one of the phases were to go to ground or if a phase-to-phase fault developed, the input and output currents would not match, indicating a problem exists within the protected area of the generator. In normal service, the currents in each phase of the generator are balanced.

To determine that the current going to the loads on the generator and the currents within the generator loop are the same as they normally would be, a detection system is set up as shown in Figure 9-25. Note that there is a set of current transformers (CTs) installed in the lines into the generator on the neutral side of the generator windings. There is a like set of CTs installed beyond the unit's circuit breaker which monitor the currents going to the generator load. The diagram shows the inter-connection of these CTs for the 'C' phase of this system. There is a like device and circuit for each phase, A, B and C.

The circuit includes a device called the 87 trip relay (differential relay). If the currents become unbalanced due to significant single phase loading or mismatched because of some of the generator output current going to ground or shorted to another phase, it would cause a current through the coil of the 87 relay. If the current is sustained at a level above the 87 relay trip set point, the relay will actuate its contact. When that contact operates, it puts a current into the latch coil on the 86 trip device shown in Figure 9-25. When the 86 trip device coil in energized, the latch holding the 86 trip device handle in the 'Reset' position is pulled by solenoid action moving the 86 Trip device to the Tripped position. Contacts in the 86 trip device close circuits in the engine and generator control systems shut down the engine and shut off the generator excitation system. The 86 trip device must be manually reset in order to restore the EDG unit to operating status.

Prompt shutdown of the generator will minimize damage to the generator and could prevent generator destruction from prolonged operation with high fault current. Prompt shutdown of the engine may prevent mechanical damage to the generator and to the engine in the event that the generator components expand or separate and cause rubbing or seizure of the generator rotor within the stator.

It is important to note that each phase of the generator is monitored by an 87 relay and that operation of any of these relays will cause the 86 device to trip, which shuts

down the generator and engine. Inclusion of the Generator Differential protection is required by the licensee's FSAR and technical specifications as required by NRC Reg Guide 1.9 and IEEE 387. This is one of the two conditions that will shut down the EDG under all circumstances. The other mandatory shutdown is for the engine going into an over-speed condition. Other shutdowns may be included only if provided with coincident logic.

9.7.1 Generator Monitoring and Protection

A panel for control and monitoring is usually found in nuclear plants. Various meters and relays and trip mechanisms are mounted on this a panel to give the operator a means of monitoring the generator's operation and performance.

Typically the following meters would be present:

- Phase Current and Phase Volt meter with phase selection switch.
- Field Volt and Amp meters
- KW and KVA meters (optionally, a Power Factor Meter)
- Synchroscope and Synchronizing Lights
- Frequency Meter (Engine Tachometer)

Typically, the relays and trips would include:

- Differential Fault and 86 trip switch
- Loss of Field and Field Ground
- Over-current and Over Voltage
- Under-Voltage
- Reverse Power
- Under Frequency

9.7.2 Generator Stresses

The generator is subject to stresses due to normal currents running through the windings. To avoid undue stresses, there are some operations and conditions which should be guarded against if at all possible. These add extra stress to the generator and may cause the generator damaged or failure. These fall into two basic categories, with some items appearing in both categories.

9.7.2.1 Electrical Stresses: (primarily for the Stator)

- High Sustained Currents
- High Motor Starting Loading currents
- Paralleling Out of Phase
- High operating temperatures

9.7.2.2 Mechanical Stresses: (primarily for the Rotor)

- Dynamic Loading (engine problems)
- Suddenly applied Fault Current Loading
- Centrifugal rotational loading
- High operating temperatures
- Paralleling out of phase
- Armature not concentric with stator
- Vibration (out of balance)
- Out of Alignment.

The above mechanical stresses may involve the engine as well as the generator.

9-8 Generator Connection and Alignment to the Engine (Fig. 9-26)

One of the exercises that students will participate in while in this school, is to check for crank shaft deflection in the last crank throw of the engine. Figure 9-26 shows how a dial indicator is mounted

between the cheeks of the crankshaft at the throws to determine that the crankshaft is straight. This procedure for crank alignment is commonly known as crank web deflection or crank alignment.

The crank pin journal can be considered to be of fixed length. If the crankshaft is not straight through the throw, as the crankshaft rotates, the crankshaft webs go through a bending to accommodate the bend in the crank. This causes the crank cheeks to go from being more open to being more closed, as shown in the lower left portion of the diagram. The crankshaft is attempting to bend in that section shown with as 'AREA OF HIGHEST STRESS'. If the crank continued to bend or deflect during each rotation, it could induce high enough stress to fail over time. It is necessary to change this situation to minimize the bending and flexing of the crankshaft particularly through the last throw.

The lower right diagram shows a situation where the some of the weight of the generator shaft and rotor are being carried by the last bearing in the engine. This bearing is next to the last throw on the crank. The upper right lower diagram shows the bending of the last throw as a result of the generator rotor weight. To alleviate this problem, usually the rear bearing of the generator is raised so that the generator-engine shaft is straight through the last bearing and straightens the last crank throw. While this diagram exaggerates the actual situation, it is usually only necessary to raise the generator bearing by a few thousandths of an inch.

It may also be necessary to shift the generator bearing sideways in order to have the crankshaft straight in the horizontal plane.

Once the generator bearing and the rotor are properly set up to relieve the crank stress/strain, then the generator stator must be positioned with respect to the rotor position so as to equalize the air gap between the stator and the rotor. This is usually done by shifting the generator on jack screws and then installing shims under the generator feet before tightening the generator to the foundation or the skid.

The details of how to perform a crankshaft alignment will be covered in the hands-on exercise.

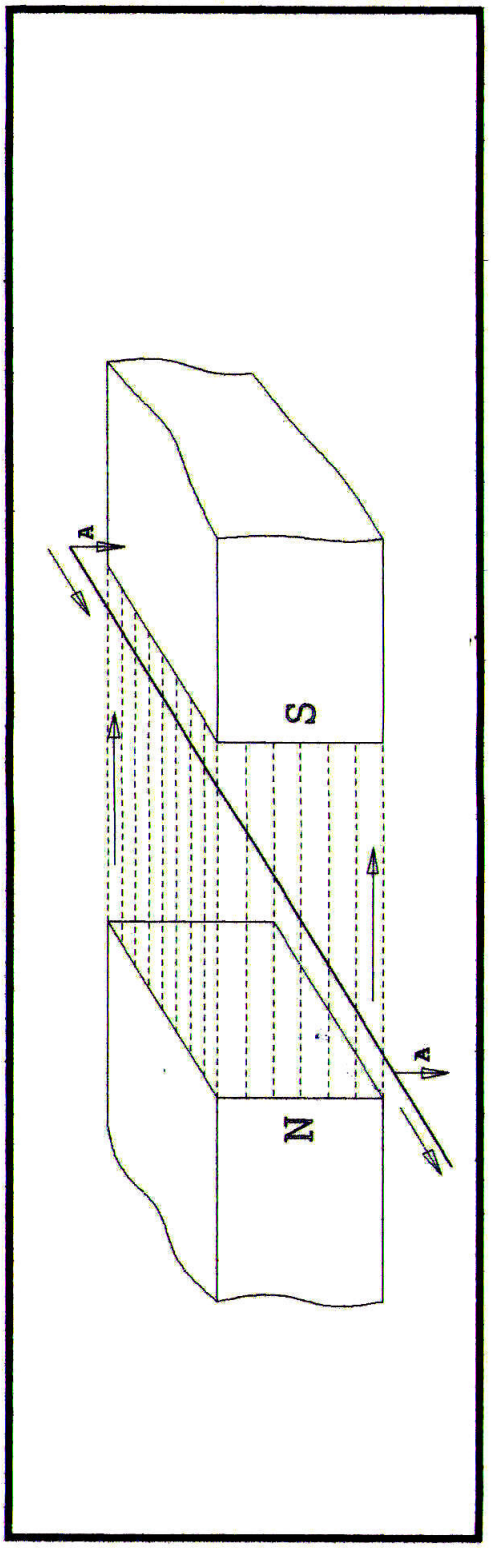

Figure 9-1 Conductor in a Magnetic Field

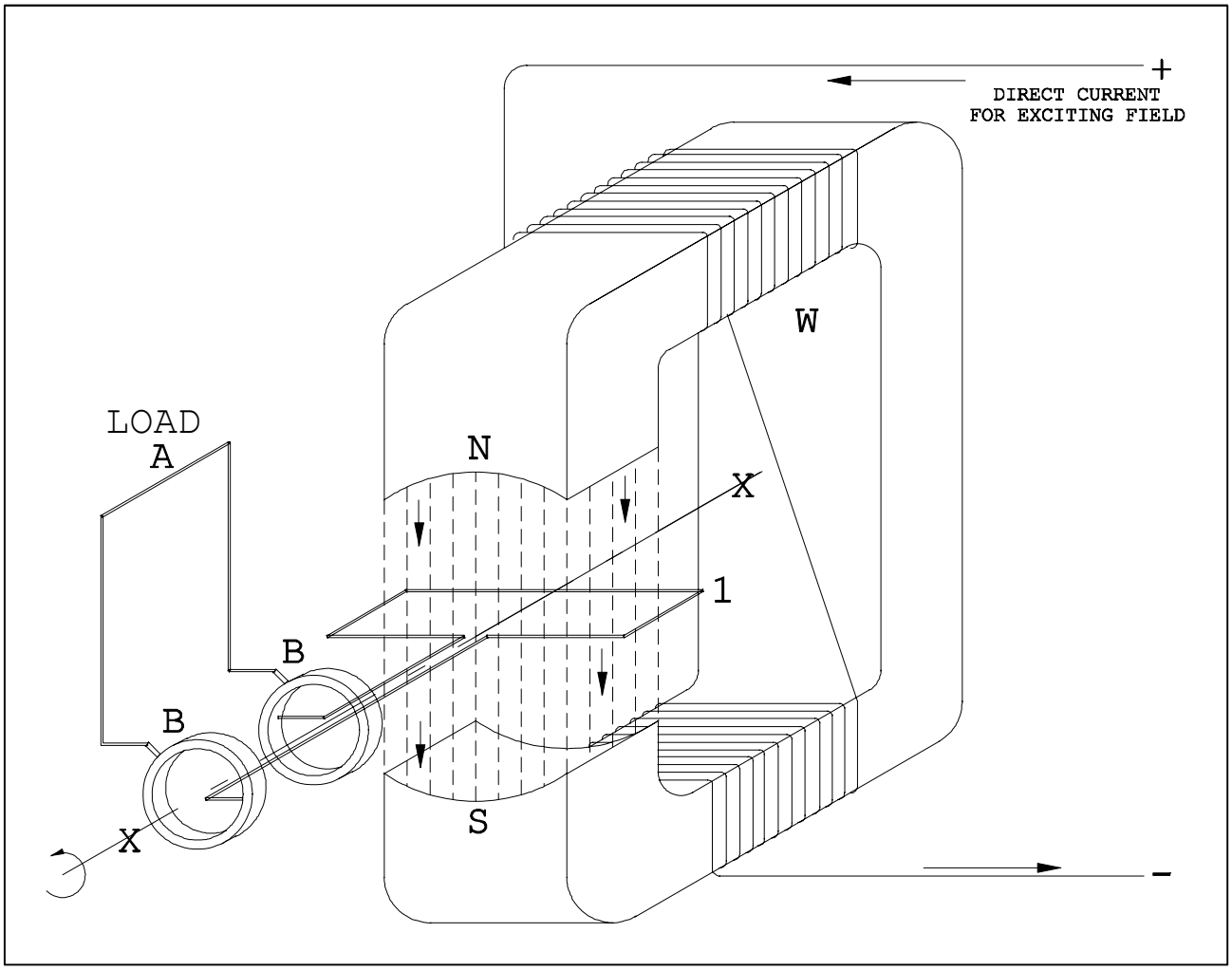

Figure 9-2 Simple Generator (Alternating Current

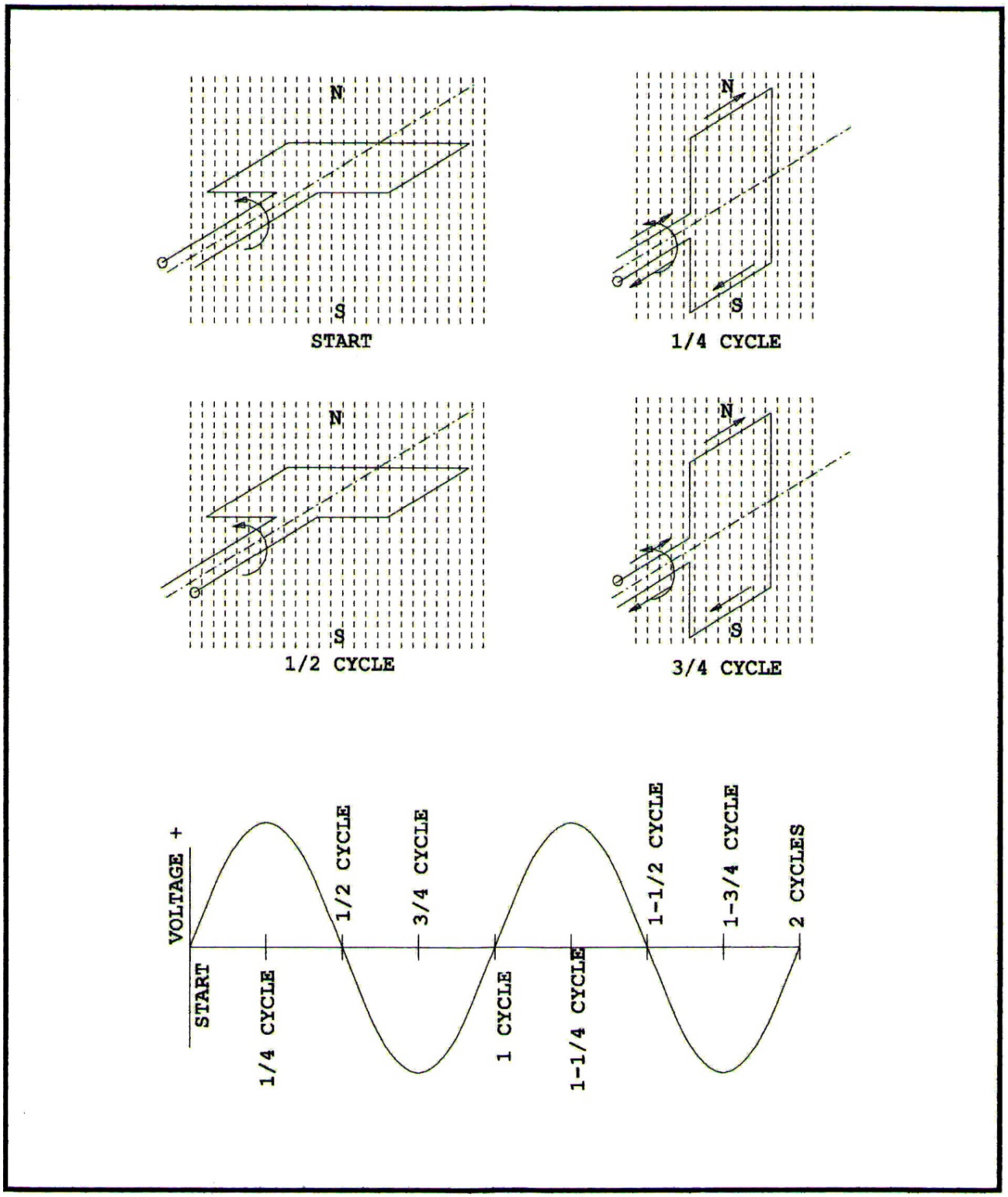

Figure 9-3 Single Phase Sine Wave

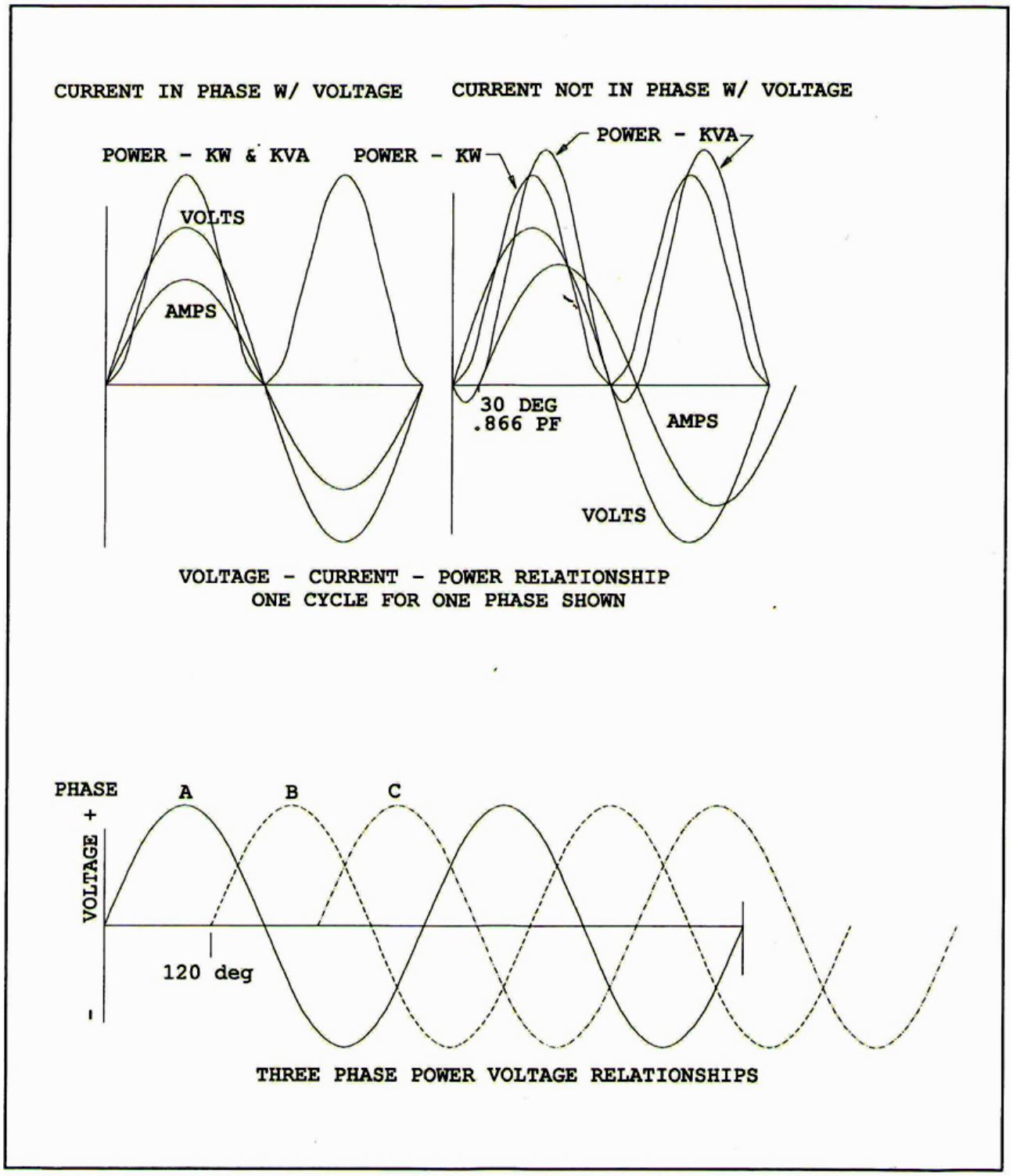

9-4 Three-Phase Generation

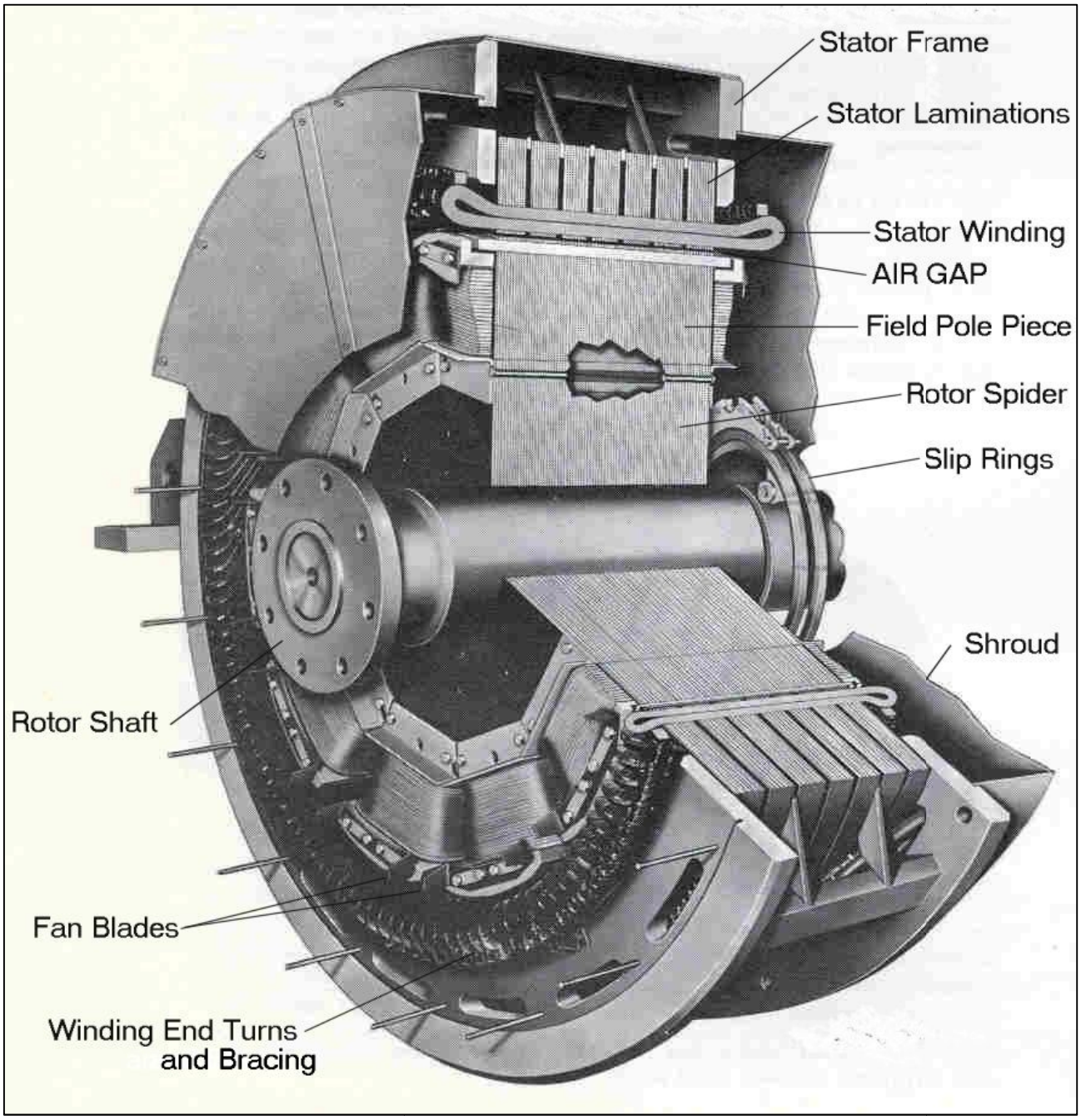
Stator Frame
Stator Laminations
Stator Winding
AIR GAP
Field Pole Piece
Rotor Spider
Slip Rings
Shroud
Rotor Shaft
Fan Blades
Winding End Turns
and Bracing

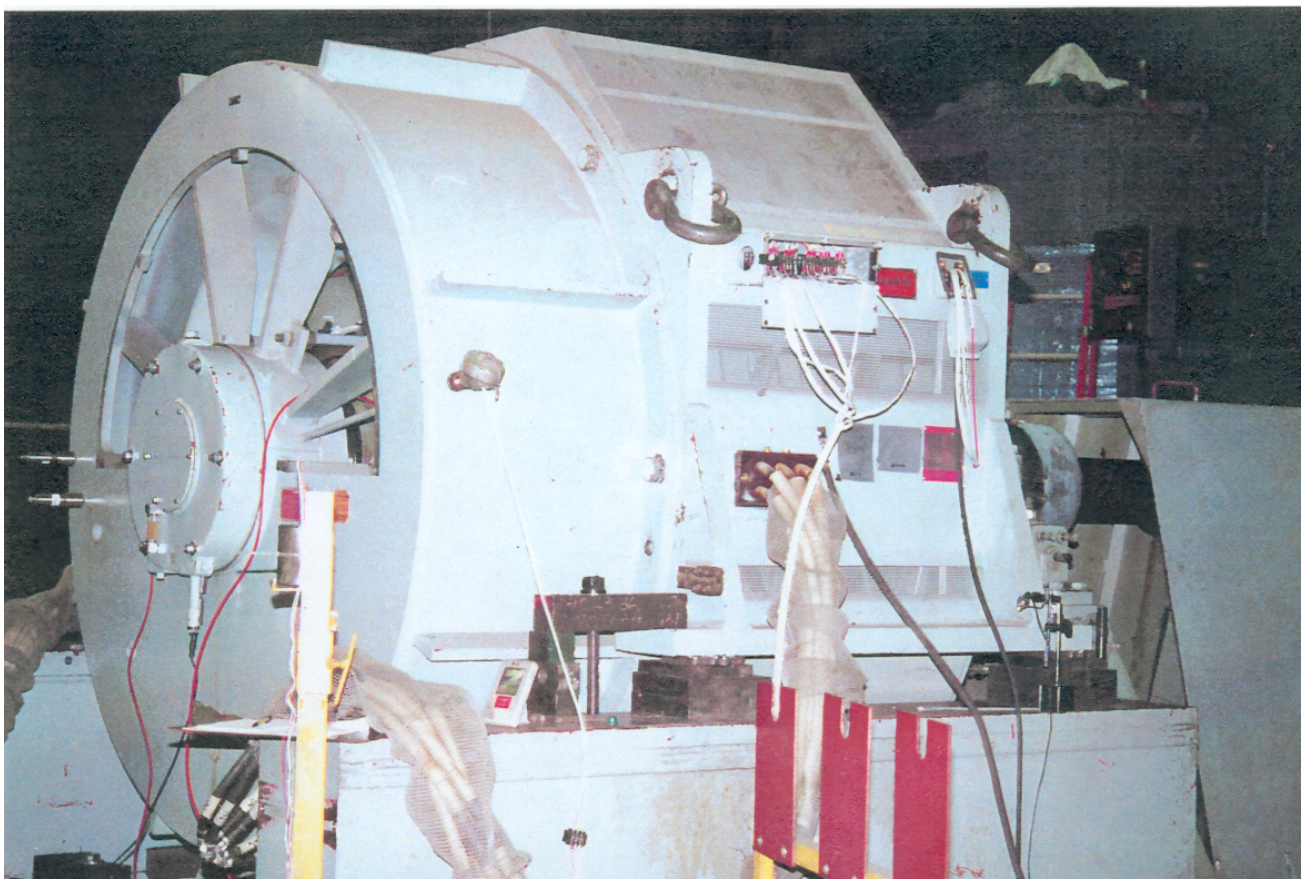

Figure 9-6 OP Engine Generator Assembly (under test)

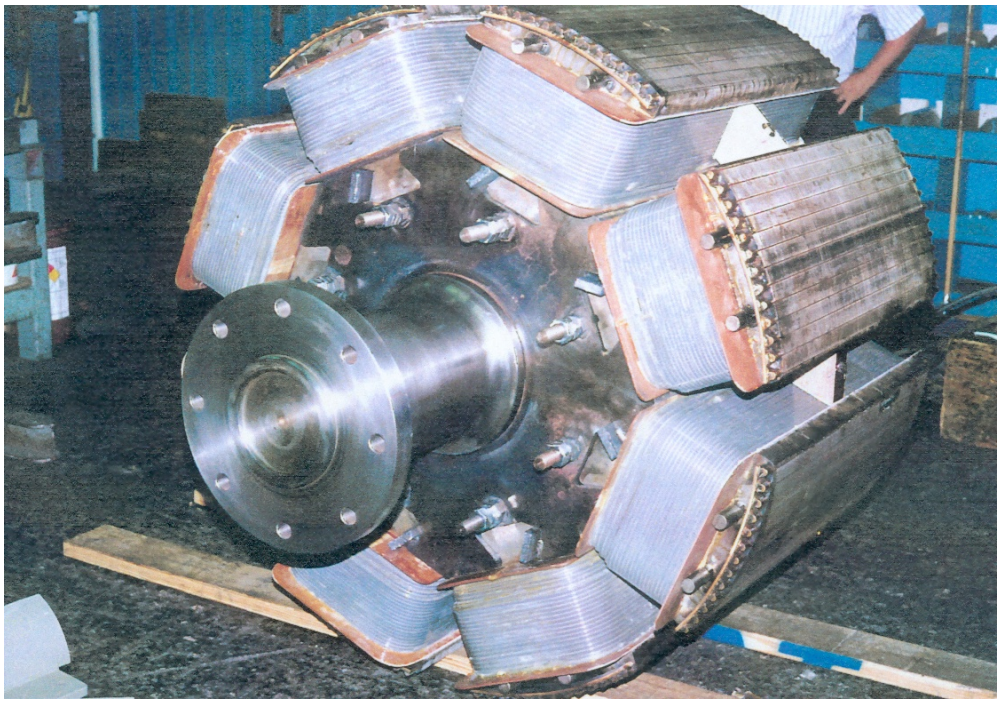

Figure 9-7 Complete Rotor Assembly (coupling end-of-shaft view)

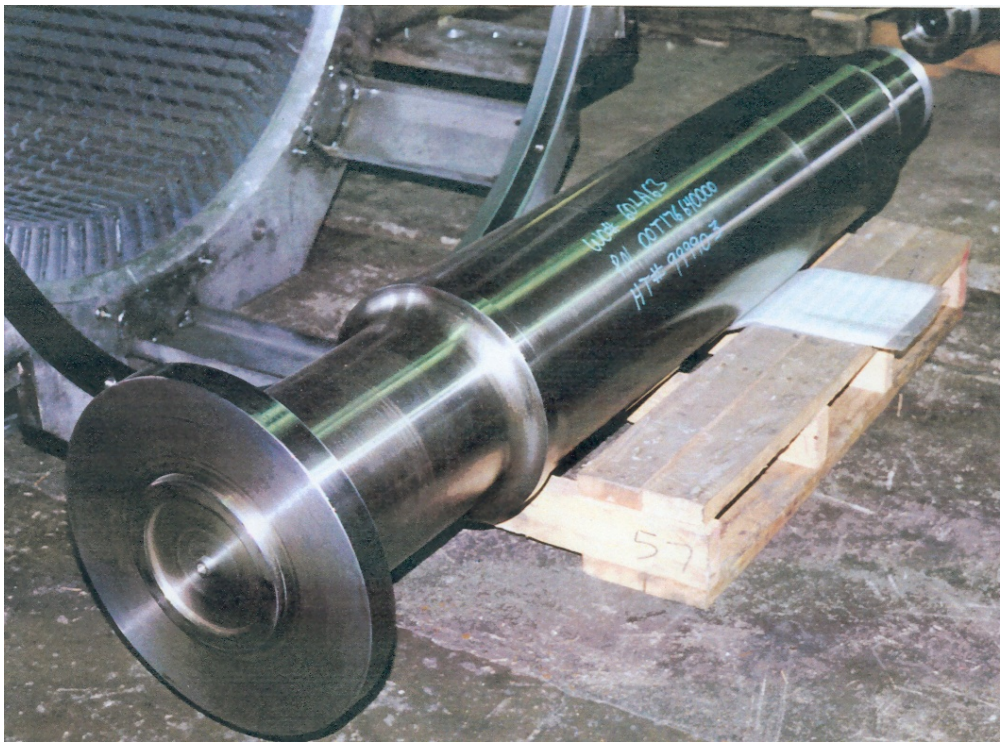

Figure 9-8 Generator Shaft (coupling end view)

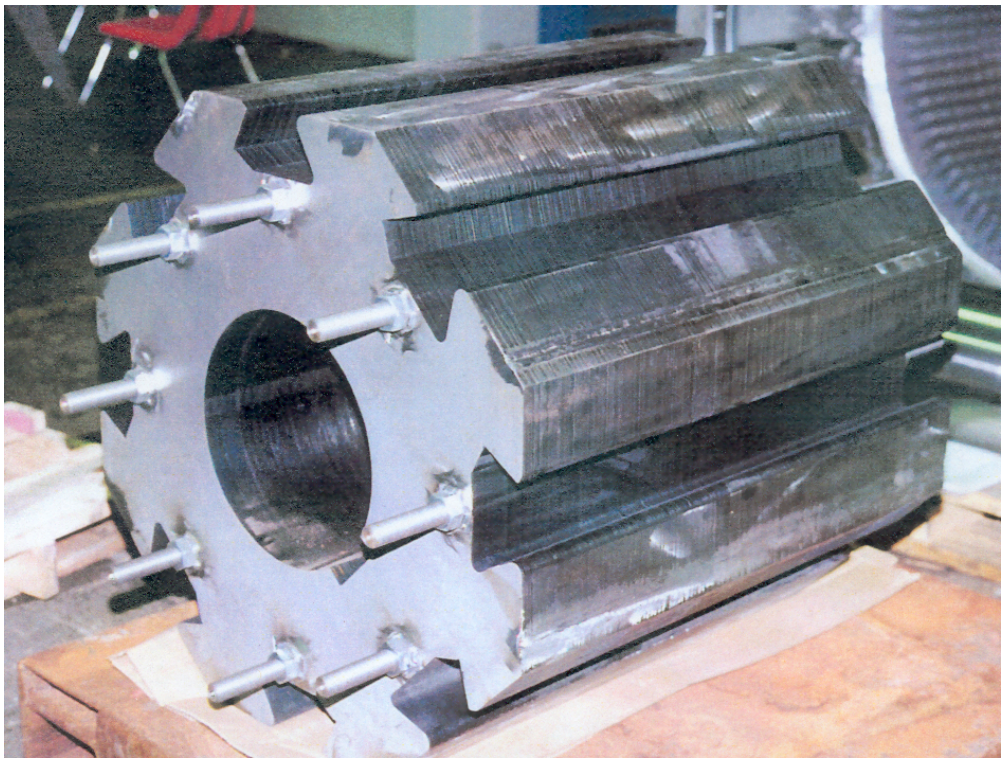

Figure 9-9 Rotor Spider (hub)

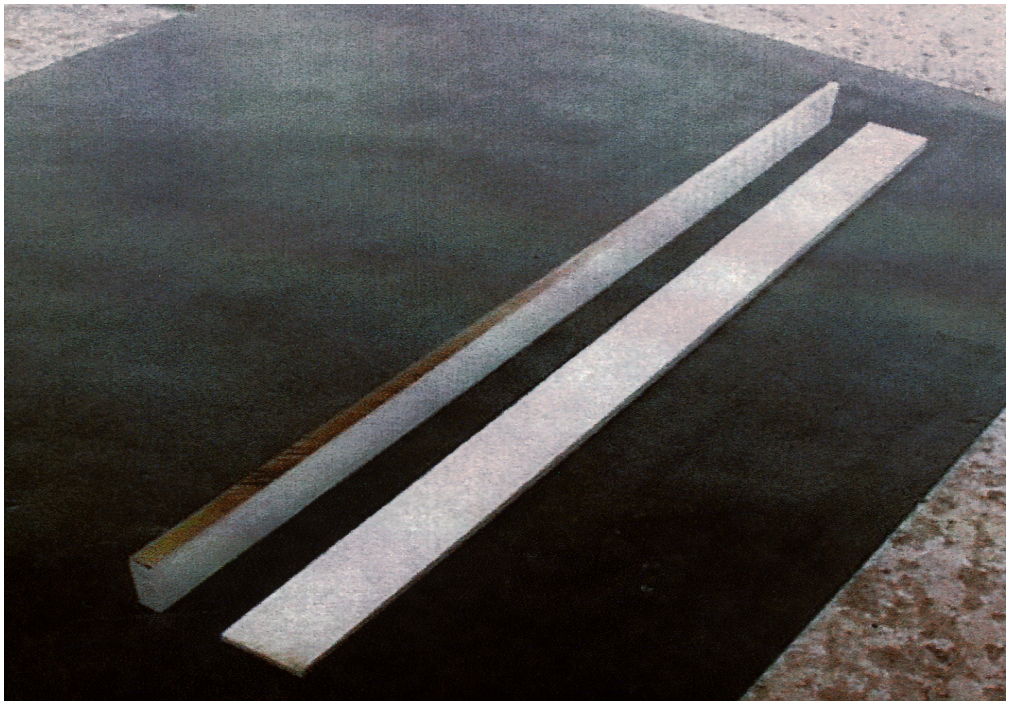

Figure 9-10 Field Pole Wedges

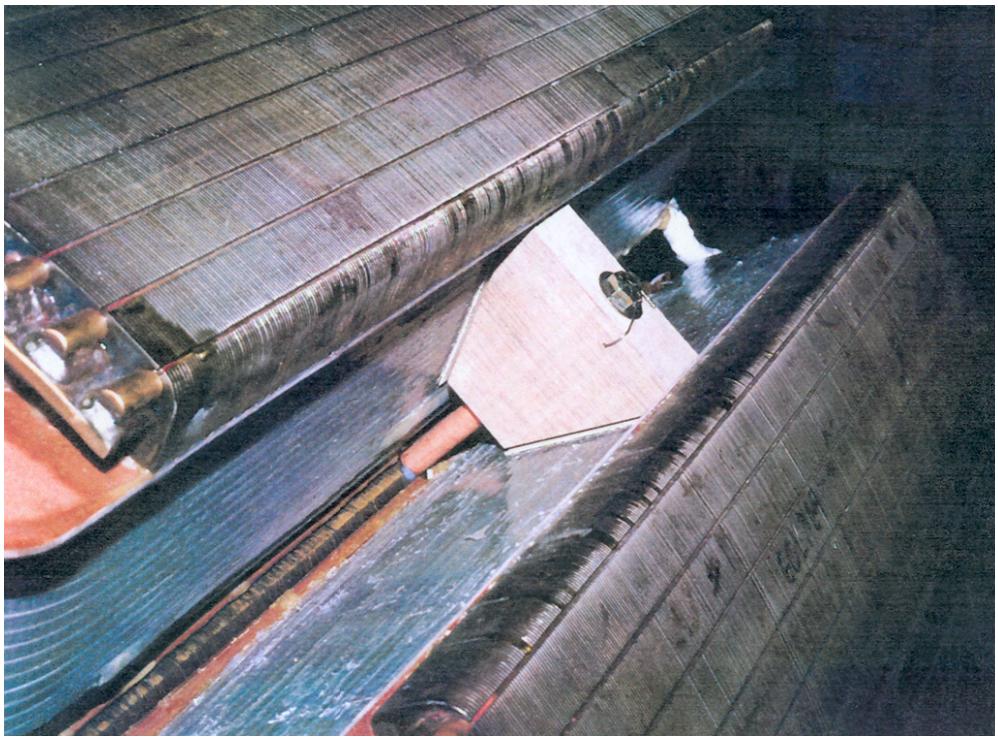

e 9-11 Field Pole Blocking

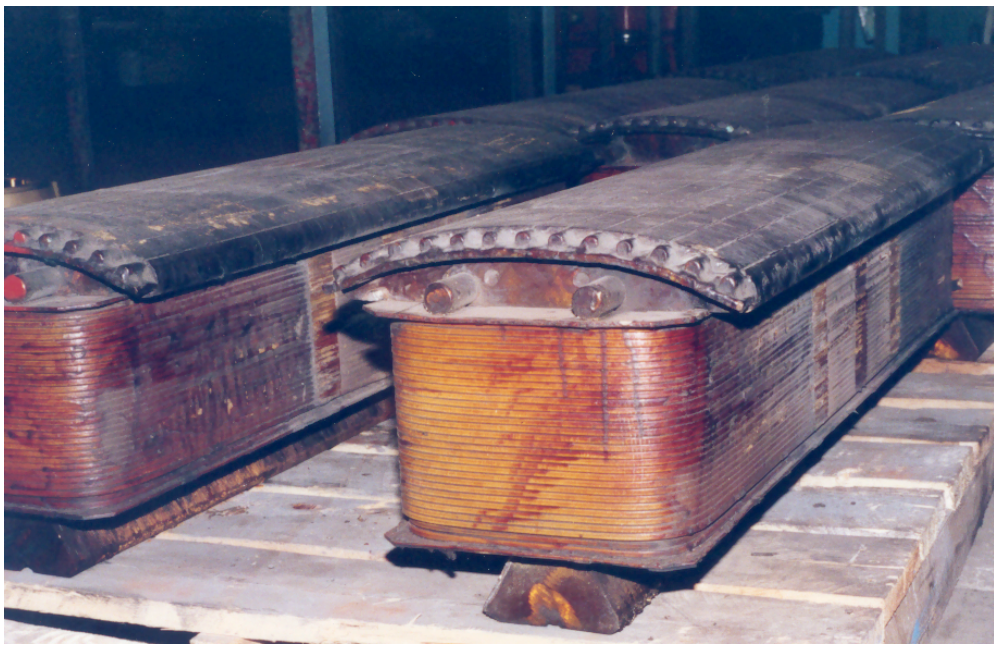

12 Field Pole with Amortiser

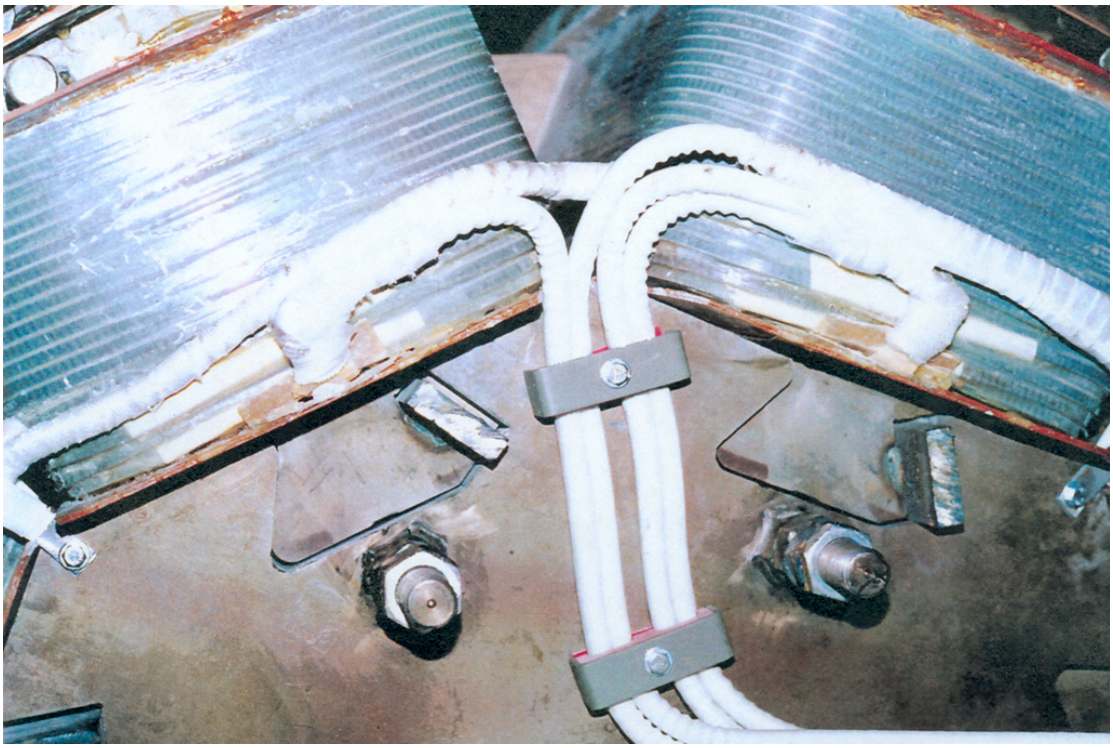

9-13 Field Wiring to Slip

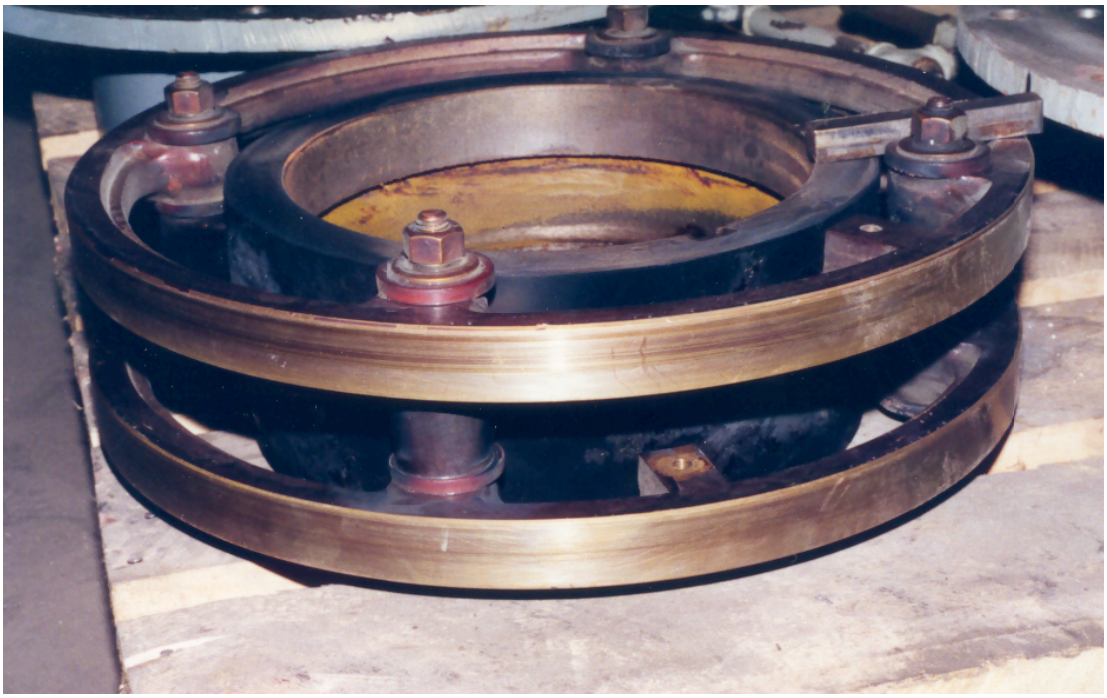

9-14 Slip Ring Assembly

'e 9-15 Winding Coil

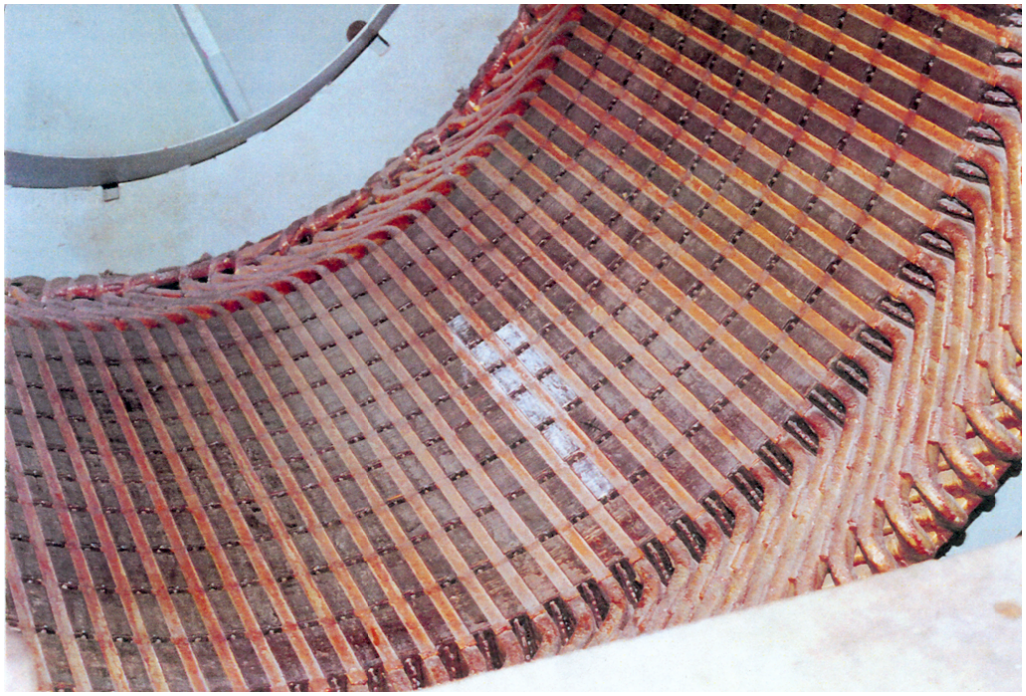

Windings Installed in Stator

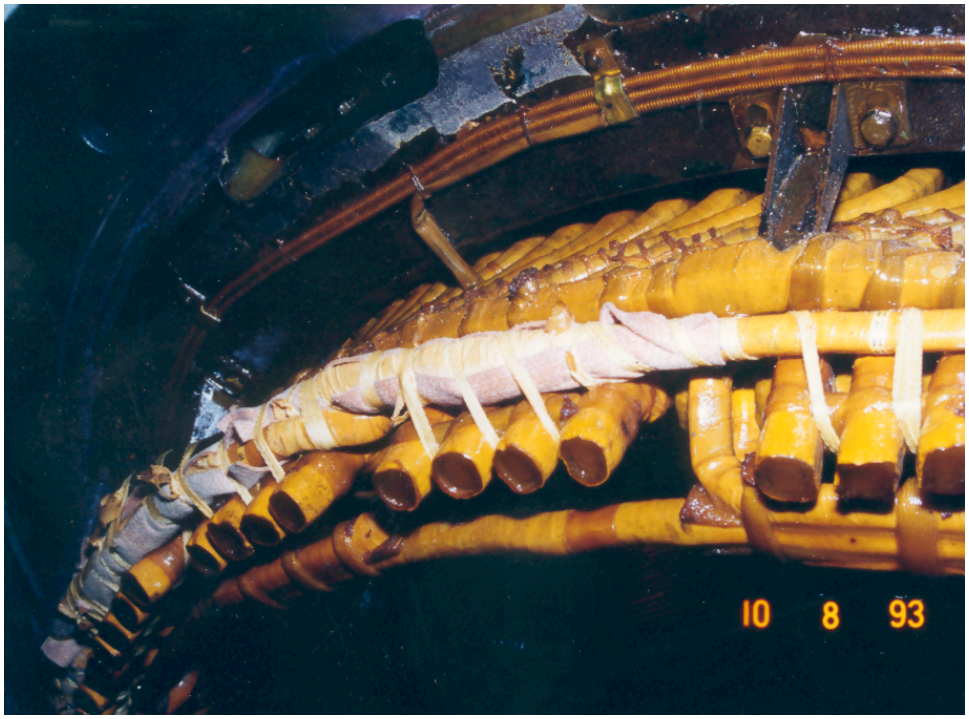

Figure 9-17 Coil Tying and Bracing

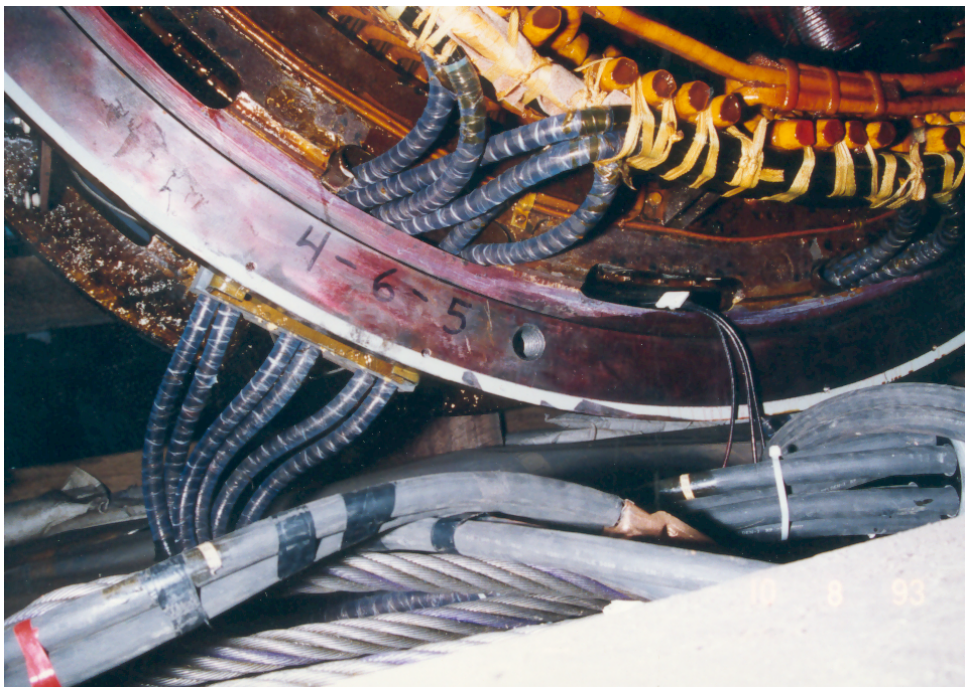

Figure 9-18 Lead Cable Terminations

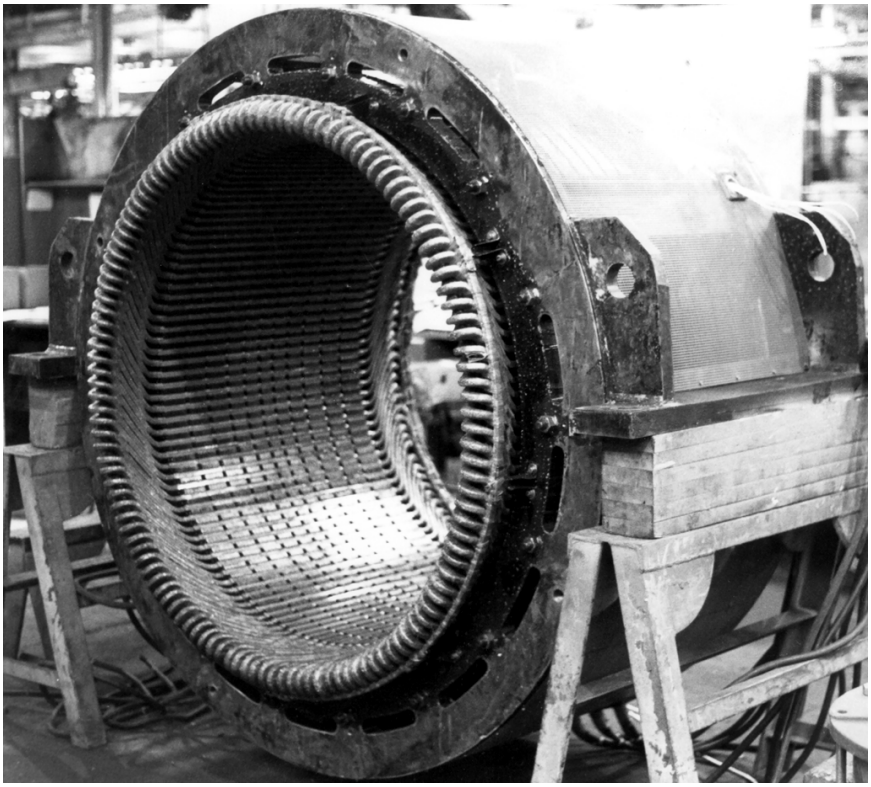

) Complete Stator Assembly

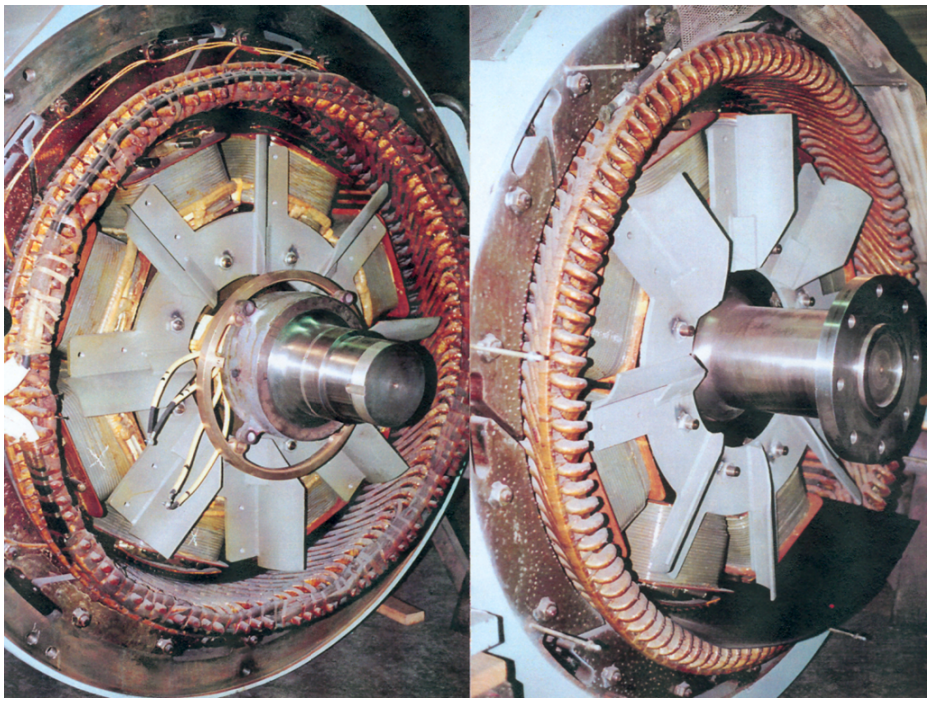

lip ring

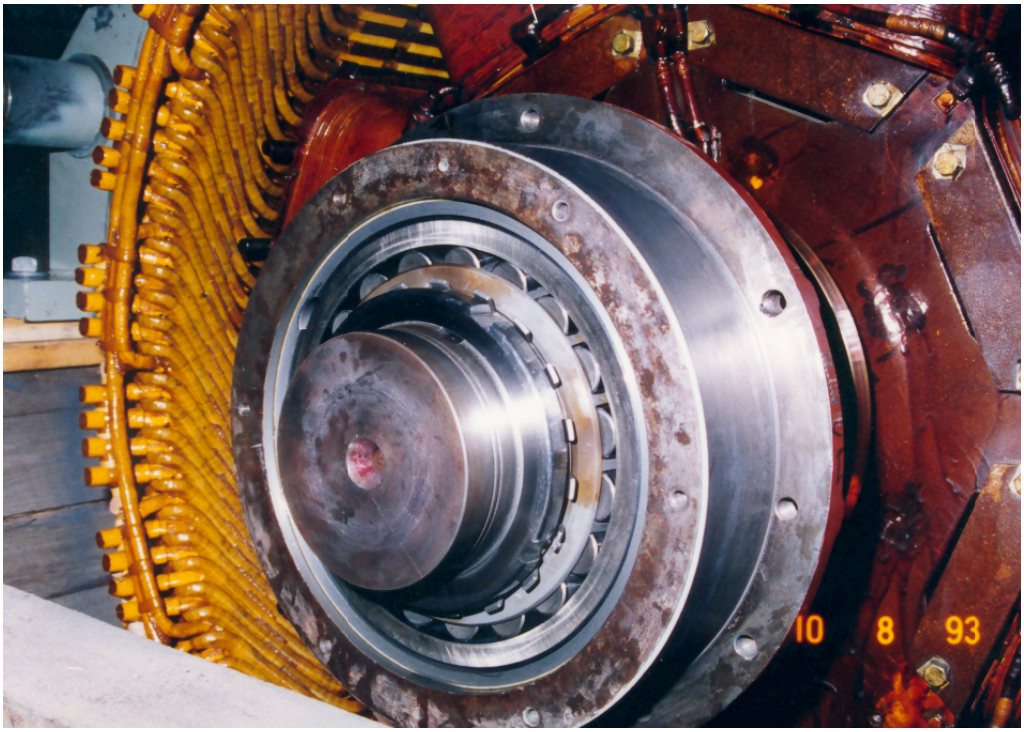

aring & Housing Assembled in Rotor

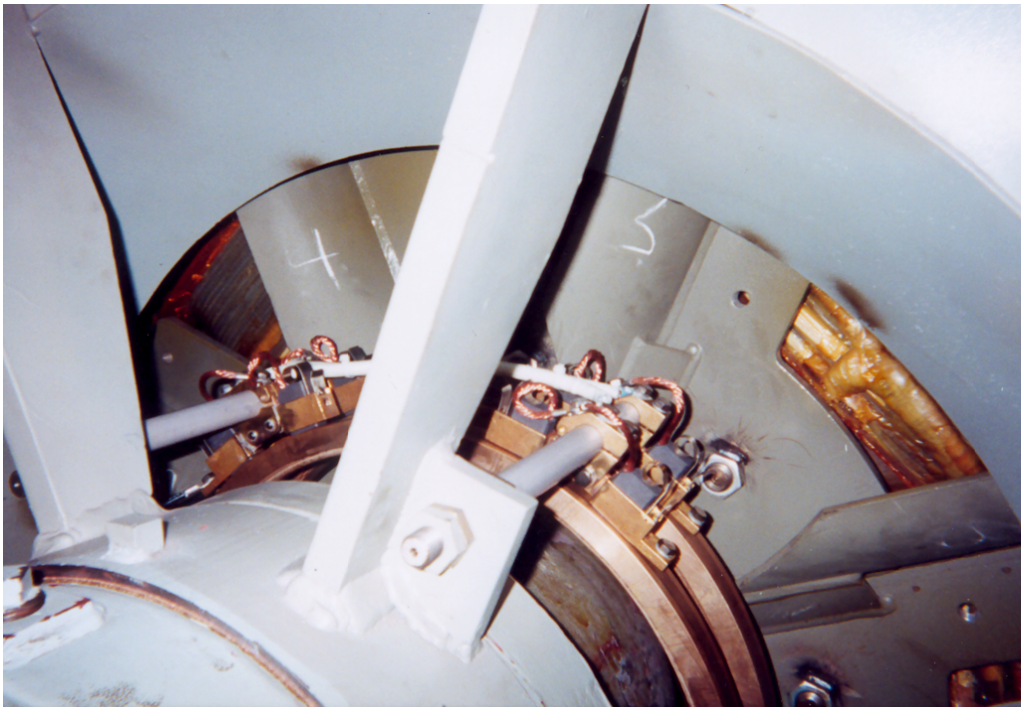

Brush Rigging and Slip Rings

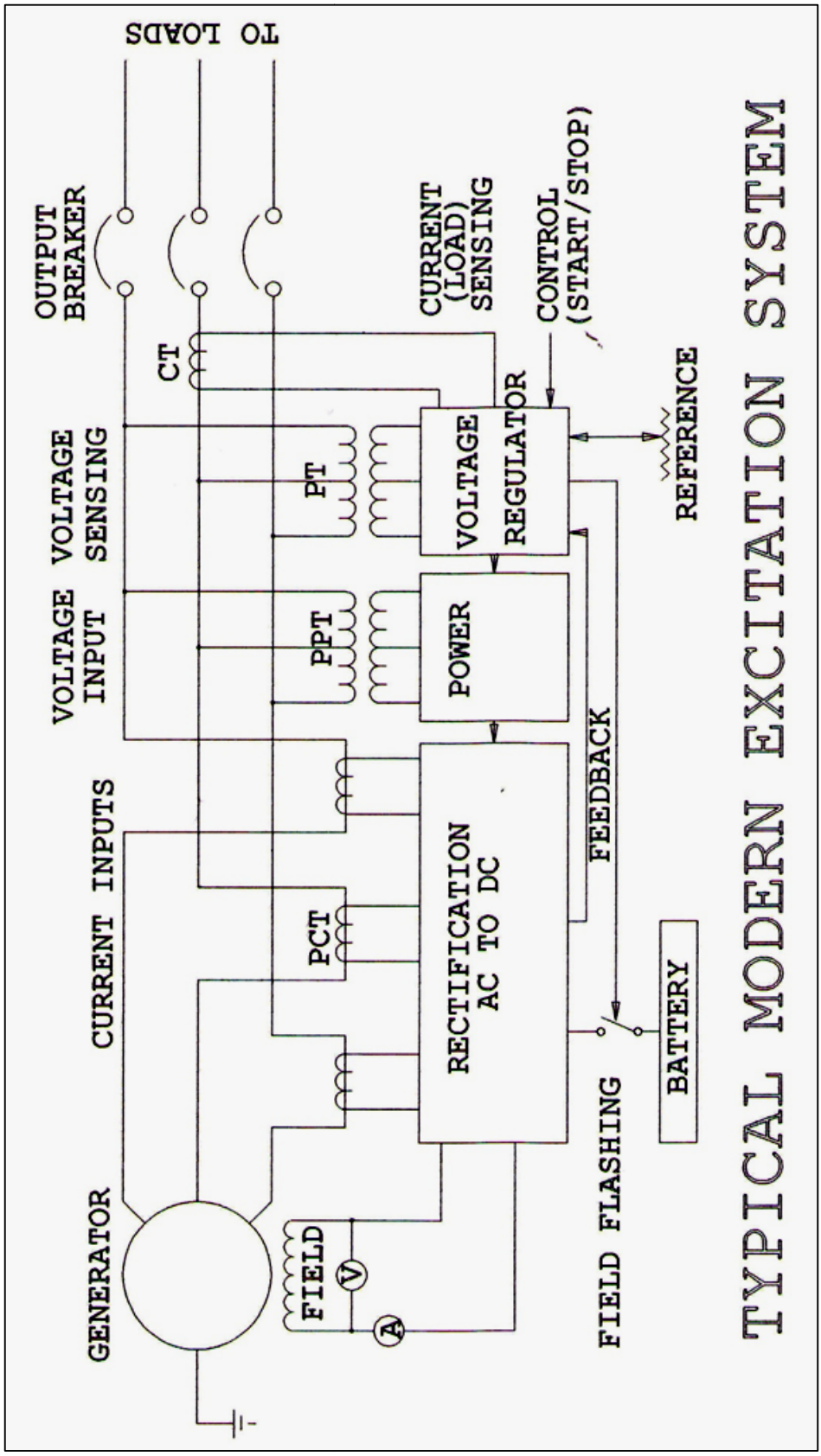

Figure 9-23 Exciter System Block Diagram (SEVR/SB

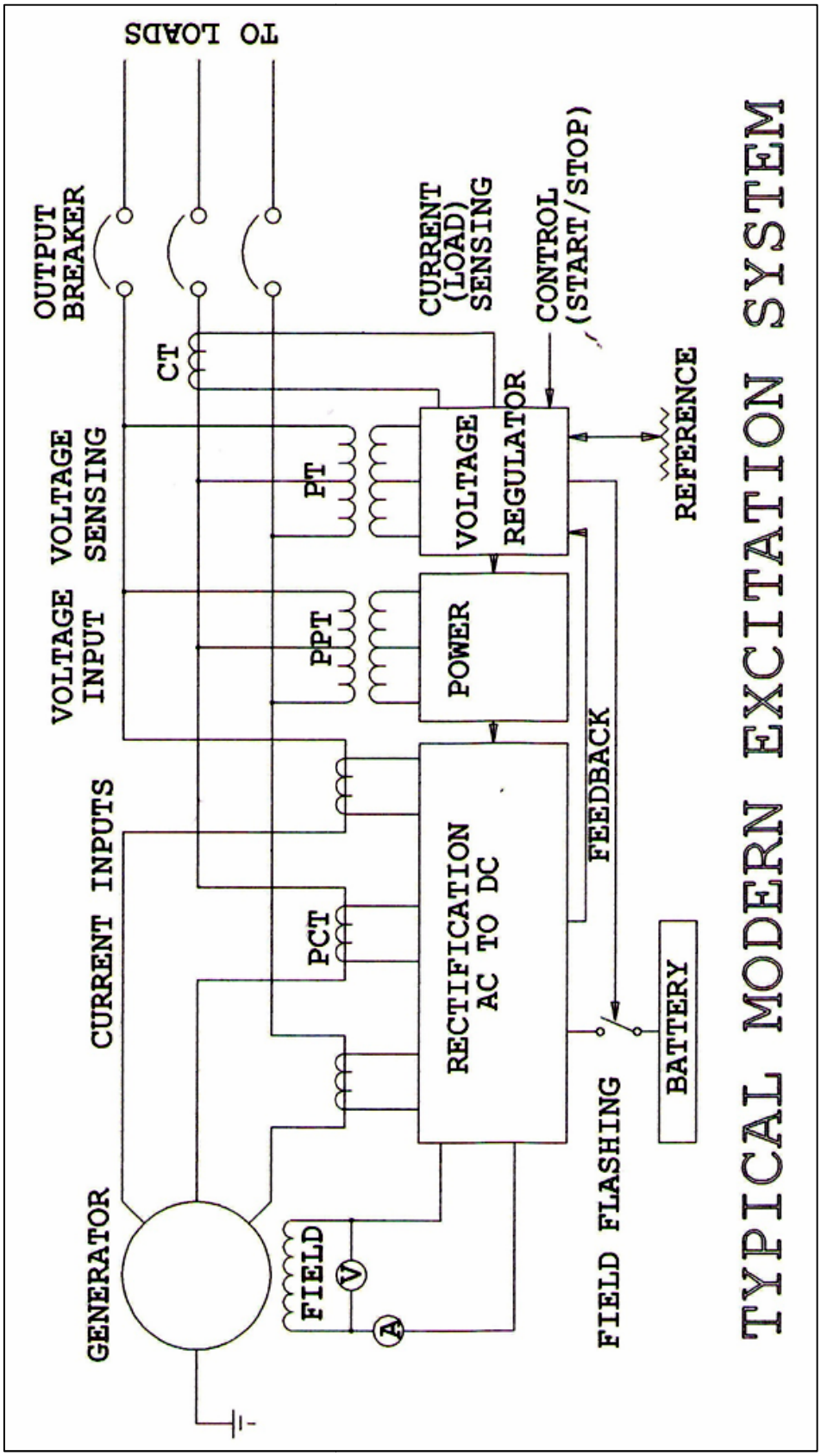

Figure 9-24 Brushless Exciter System Diagram

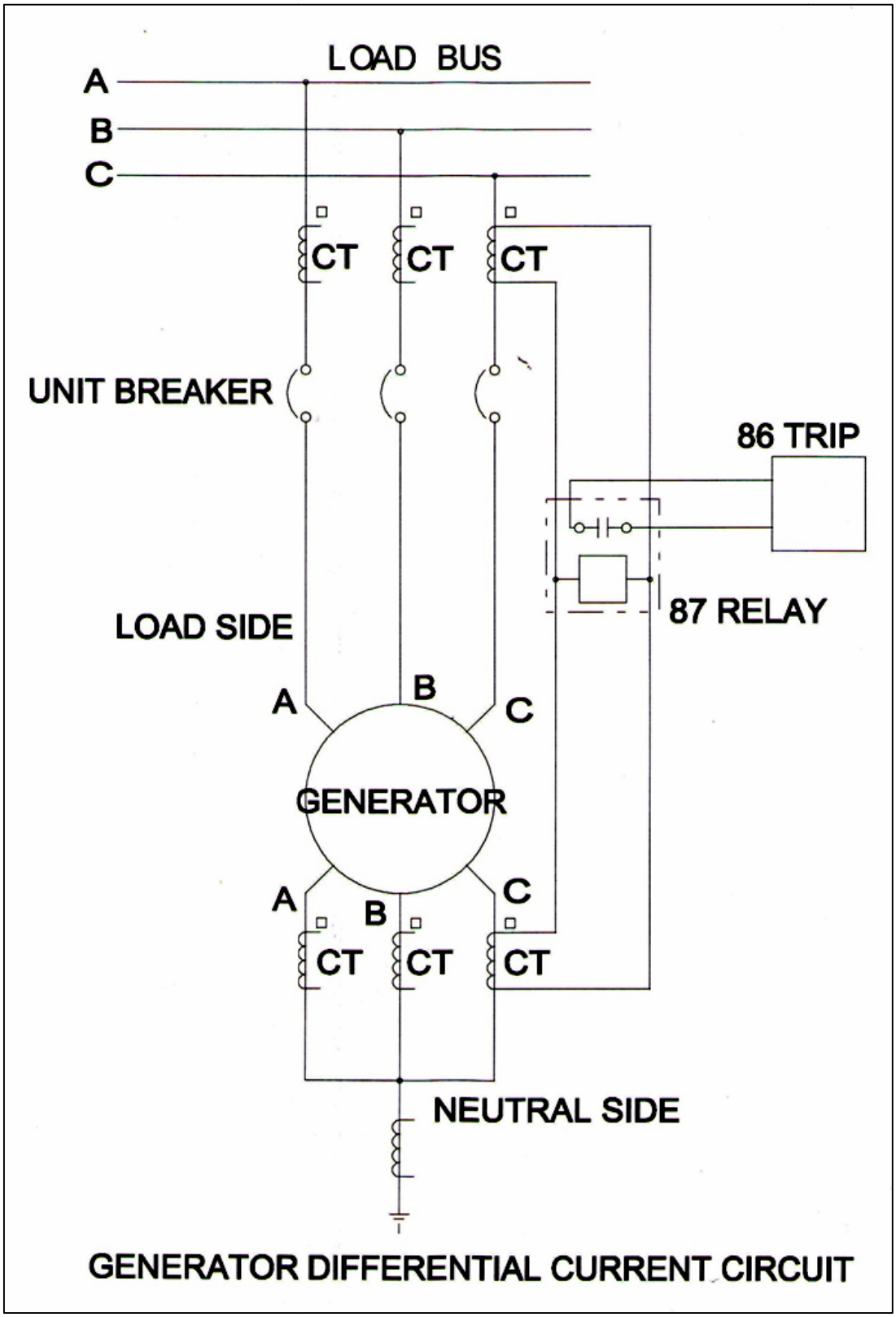

-25 Generator Differential Fault

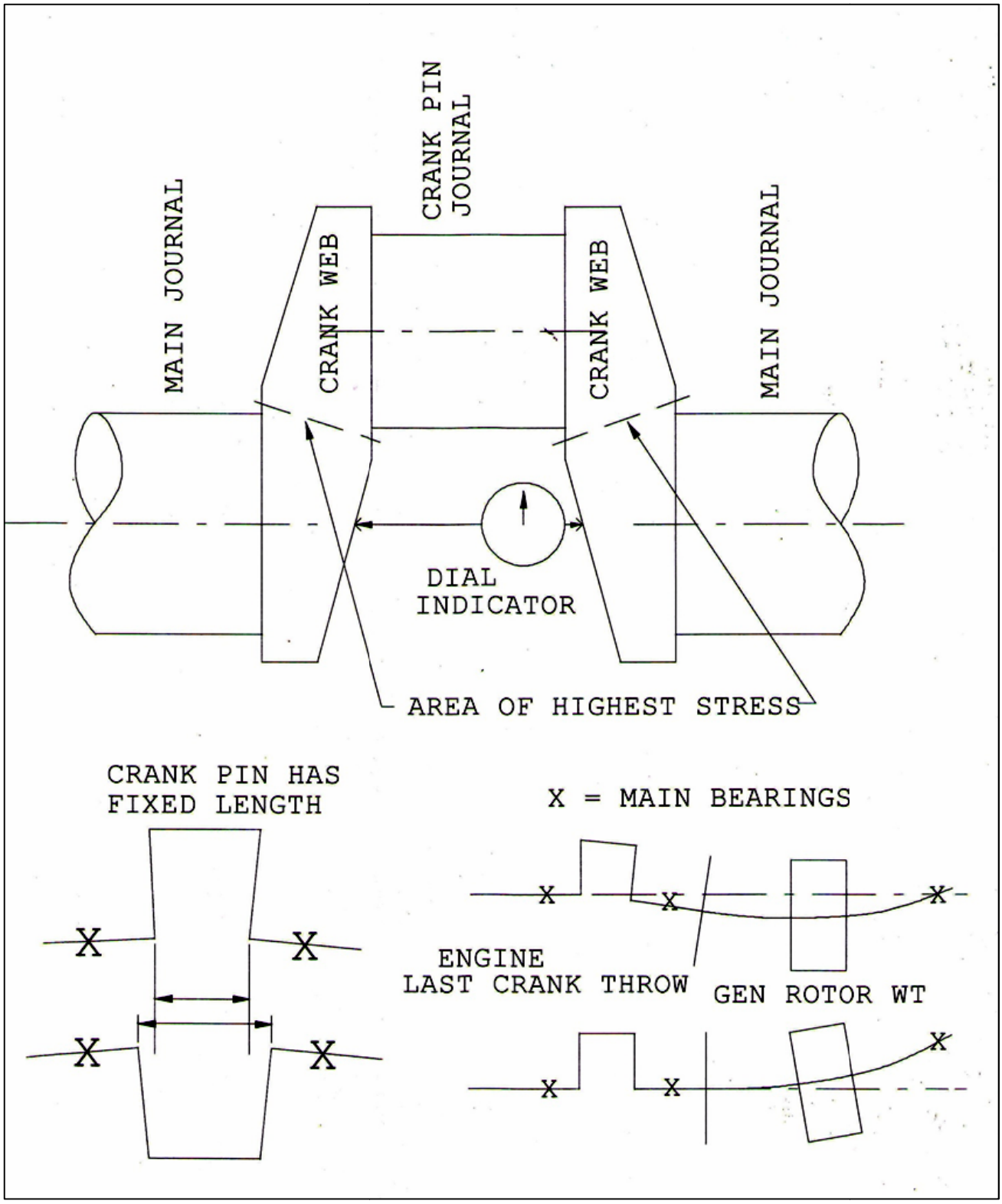

:6 Engine-Generator Alignment

HANDS-ON SESSION 10

10.0 GENERATOR, EXCITER, AND VOLTAGE REGULATION

Purpose

The purpose of this session is to complement Chapter 9.

Learning Objectives

Upon completion of this lesson you will:

1. Become familiar with the EDG generator configuration, components locations and their functions.

2. Understand the alignment of generator shaft with crankshaft and alignment of the generator rotor within the generator stator

3. Understand the need for proper connection from external exciter through generator brushes and slip rings to generator field windings

4. Understand the need for insulation of generator end bearing from ground

5. Understand the need for periodic inspections and tests of slip rings, brushes, windings, bearing, and alignment

10.1 The Generator

Using the EDG generator on the test floor, the instructor will conduct the following training:

- Identify the generator frame including its mounting/provisions for an on-engine mounting.
- Show how the generator stator is mounted within the frame with its power leads brought out.
- Show how the generator field pole pieces are mounted on the rotor and its mounting to the generator power input shaft.
- Identify and discuss the generator stator to rotor air gap.
- Discuss air gap functions and importance of its concentricity.
- Show how the slip rings are mounted to the generator shaft and are connected to the generator field.
- Show how the brush rigging is mounted above the slip rings.
- Show the brush holders, spring clips, and brushes and discuss their alignment, curvature, condition, and how to measure brush pressure.
- Show where the input from the external exciter is connected into the brush holders.
- Show the generator outboard (inboard) bearings and the need for alignment, lubrication, and isolation from ground.
- Show the generator shaft input coupling to the diesel engine. Discuss the need for proper alignment and mounting to the engine.
- Discuss periodic inspections and tests of the generator including slip rings, brushes, windings, bearings, and alignment.
- Discuss potential problem areas, indications of problems, and tests.