The Dow Chemical Company
Midland, Michigan 48667

Mr. Geoffrey Wertz
Research and Test Reactors Licensing Branch
Division of Policy and Rulemaking
Office of Nuclear Reactor Regulation

Subject: Dow Chemical Company- Response to the Request for Additional Information for the renewed license of the TRIGA research reactor. License No. R-108; Docket No. 50-264

Enclosed the response to the request for additional information questions 7, 24 and 29. In addition, I am requesting a 60 day extension for the following questions as I await analysis results:

RAI 14, 16, 18, 19 and 53

Should you have any questions or need additional information, please contact the Facility Director, Paul O'Connor, at 989-638-6185.

I declare under penalty of perjury that the foregoing is true and correct.

Executed on August 12, 2011

Paul O'Connor

Paul O'Connor, Ph.D.
Director
Dow TRIGA Research Reactor

Subscribed and sworn to before me this 12th day of August, 2011

Stacy L. McKeon
Notary Public
_____County, Michigan
My Commission Expires:

_____

STACY L. McKEON
NOTARY PUBLIC
COUNTY OF BAY
My Commission Expires
June 28, 2017
Acting in the County of
Midland
STATE OF MICHIGAN

cc: Wayde Konze, R&D Director - Analytical Sciences
Paul O'Connor, Director
Siaka Yusuf, Reactor Supervisor

A020
NRR

DTRR response to questions 7, 14, 16, 18, 19, 24, 29 and 53

Aug 2011

7. NUREG–1537, Part 1, Section 3.1, "Design Criteria" and Section 3.5, "Systems and Components" requests the applicant to identify the safety related structures, systems, and components (SSC) for its facility and provide information pertaining to their design. DTRR SAR, Section C.1, does not provide sufficient information.

   7.1 Please provide a description of the design of DTRR SSCs that are required to assure safe reactor operation and shutdown such as the rod control system, the reactor control system, and control rod assemblies.

   7.2 Please provide the criteria applicable to the design and construction of building 1602 including building codes used at the time of construction.

DTRR Response

7.1 This question has been addressed adequately in section C.1 for the requested power level of 300kW.

7.2 The building code in place and used at the time of construction of 1602 building which houses the DTRR, is "The Uniform Building Code, 1958 Edition". A detailed copy of this code is available through the City Clerk of the City of Midland, Michigan.

14. NUREG–1537, Part 1, Section 4.5, "Nuclear Design" requests the applicant to provide a detailed description of analytical methods used in the nuclear design, including computer codes used to characterize technical parameters pertaining to its reactor. DTRR SAR, Chapter D, does not provide sufficient information. Please provide descriptions of the DTRR nuclear design analyses, including the methods and the computer codes used for the analyses.

DTRR Response

The response to this question is awaiting the results of the Neutronics and Thermal-hydraulic models using MNCP and RELAP codes, which are being carried out specifically for the DTRR. A time extension of 60 days is hereby requested for this RAI.

16. NUREG–1537, Part 1, Section 4.5.2, "Reactor Core Physics Parameters" requests the applicant to provide a description of the full set of core physics parameters for the LCC that are used in their safety analyses and the methods used to determine them. DTRR SAR, Table 4, provides some of the values cited (i.e., β_{eff}, prompt-neutron-lifetime, fuel temperature and the void coefficient). However, it is unclear if these are generic values or if they are applicable to the LCC of the DTRR and to the safety analyses in Chapter M. Please provide a description of the full set of core physics parameters for the LCC that are used in the DTRR safety analyses and the methods used to determine them.

DTRR Response

The response to this question is awaiting the results of the Neutronics and Thermal-hydraulic models using MNCP and RELAP codes, which are being carried out specifically for the DTRR. A time extension of 60 days is hereby requested for this RAI.

18. NUREG–1537, Part 1, Section 4.6, "Thermal-Hydraulic Design" requests the applicant to provide information and analyses of thermal-hydraulic conditions in its reactor demonstrating that sufficient cooling capacity exists for steady-state operations at the maximum licensed power level. DTRR SAR, Chapter D, does not provide sufficient information. Please provide information pertaining to the minimum DNBR for the DTRR using the LCC at the new requested power level. Please describe the analytical methods used to determine the DNBR, including the core inlet and exit conditions assumed and other assumptions and correlations employed.

DTRR Response

The response to this question is awaiting the results of the Neutronics and Thermal-hydraulic models using MNCP and RELAP codes, which are being carried out specifically for the DTRR. A time extension of 60 days is hereby requested for this RAI.

19. NUREG–1537, Part 1, Section 5.2, "Primary Coolant System" requests the applicant to provide a description of the primary coolant system, including information to substantiate the removal of heat from the fuel during maximum licensed power operation and decay heat when the reactor is shutdown. DTRR SAR, Sections E.1 and E.3, do not provide information demonstrating the adequacy of the primary system to perform this task. Please provide information showing the adequacy of the primary system to cool the reactor under all anticipated conditions of operation at the new requested power level.

DTRR Response

The response to this question is awaiting the results of the Neutronics and Thermal-hydraulic models using MNCP and RELAP codes, which are being carried out specifically for the DTRR. A time extension of 60 days is hereby requested for this RAI.

24. NUREG–1537, Part 1, Section 5.3, "Secondary Coolant System" requests the applicant to provide a discussion and functional analyses showing how the system provides the necessary cooling for all potential reactor conditions at the maximum licensed power level. DTRR SAR, Section E.3 does not provide this information. Please provide a discussion and functional analysis showing the adequacy of the secondary system to provide necessary cooling at the new requested power level. Also include a discussion of the potential consequences of a glycol leak from the SR-1 system into the primary water and the methods used to detect and prevent such leakage.

DTRR response

With regard to the first part of this RAI, Operating experience shows that the current 1MW secondary cooling system is capable of providing the necessary cooling for all potential reactor conditions at the requested power level of 300kW.

The potential leakage of SR-1 into the primary loop was analyzed and discussed in the 50-59 review for the heat exchanger prior to its installation and use at the DTRR. It was determined that the leakage of SR-1 from the secondary loop into the primary pool water is highly unlikely because the design of the Heat-Exchanger incorporates a special "Tube and Shell" combinations. They are designed such that the SR-1 and the primary pool water are carried in separate tube bundles, in close proximity, but they do not share common vessels. Should a leak develop in either the primary or the secondary tubes, there must be a simultaneous leak in the adjacent tube for SR-1 to mix with the pool water and this scenario was considered to be highly unlikely. Also, should a leak develop in either the primary or secondary, this will be immediately seen through a "drip hole" in the heat exchanger vessel. This drip hole is visible to the reactor operator and it is checked daily or whenever the reactor is operated. A colorless fluid drip will indicate pool water leakage while a pinkish fluid drip will indicate an SR-1 leakage.

The effect of SR-1 on the reactor is minimal even in a worst case event of SR-1 getting into the pool water because, as shown in the specification for SR-1, Table 8 below, the SR-1 fluid used in the DTRR heat exchanger has less corrosive effect on Stainless steel and Aluminum than water. Finally, also from the chemical properties of SR-1 fluid, the immediate consequence of SR-1 getting into the pool water is a rise in pool water pH and a rise in pool water conductivity. This will be detected immediately because both the pool water pH and conductivity are checked regularly.

Table 8 — Corrosion Test Results/Mils Penetration per Year (Weight Loss in Milligrams) Rates in Excess of 0.5 mpy (2.5 mpy for Aluminum) Are Generally Evidence of Inadequate Corrosion Protection.

	Water	Ethylene Glycol	DOWTHERM SR-1 Fluid	DOWTHERM 4000 Fluid
Copper	0.08 (2)	0.16 (4)	0.12 (3)	0.08 (2)
Solder	3.14 (99)	56.5 (1780)	0.13 (4)	0.13 (4)
Brass	0.23 (5)	0.46 (11)	0.12 (3)	0.08 (2)
Mild Steel	9.69 (212)	44.5 (974)	0.04 (1)	0.04 (1)
Cast Iron	21.2 (450)	55.7 (1190)	0.13 (3)	0.23 (5)
Aluminum	13.2 (110)	19.8 (165)	0.44 (4)	+0.12 (+1)

Samples with a "+" showed weight gain.

ASTM D1384—190°F (88°C) for 2 weeks. 30% by volume glycol, air bubbling.

29. NUREG–1537, Part 1, Section 7.2, "Design of Instrumentation and Control Systems" requests the applicant to provide information regarding the basis for evaluating the reliability and performance of the I&C systems. DTRR SAR, Chapter G, does not provide sufficient information.

    29.1 Please describe the design basis for the I&C system.

    29.2 Please provide a system description that includes block, logic, and schematic diagrams of the I&C system.

    29.3 Please describe the methodology and acceptance criteria used to establish and calibrate the trip and actuation setpoints or interlock functions.

    29.4 Please summarize how the system design is sufficient and suitable for performing the functions required for operation at the new requested power level.

DTRR Response:

29.1 The bases for the instrumentation and control systems for the DTRR is an industry standard microprocessor based reactor control system, designed and built by the General Atomics. This system which is similarly used for TRIGA reactor controls at USGS in Denver, and the University of Texas at Austin, has proven to be robust and sufficient for TRIGA reactor control. At the heart of this system is the NM1000. The NM1000 provides wide-range power related signals from a fission chamber placed outside of the reactor core to a Data Acquisition Computer (DAC) and the Control System Computer (CSC). The resulting reactor system and power status are then displayed onto two monitors for the reactor operator in the control room. The signals are also used by the SCRAM circuits and interlock circuits which provide signals for the control and movement of control rods. The NM1000 is capable of functioning at all power levels because at low power level, it operates in pulse mode and at higher power level, it transitions into the "Campbelling mode" linearly.

NPP1000, a safety channel which uses an uncompensated ion chamber, also monitors the reactor power using analog signals. The signal from this safety channel is used to SCRAM the reactor should the power level reaches or exceeds a preset percentage value of the reactor license power as measured by the NPP1000 detector.

29.2 The block diagram of the Instrument and control system for the DTRR is shown in Figure 29.2 below. As described in response to RAI 29.1 above, the system is based on an industry standard. Operational experience shows that it is capable and sufficient to control the DTRR for the reactor power level of 300kW. It has the following main parts: The NM1000 and the NPP1000 with their associated sensors, signal conditioning amplifiers and integrated circuits and power supplies; The Data Acquisition Computer; The Control System Computer; And the Control Console.

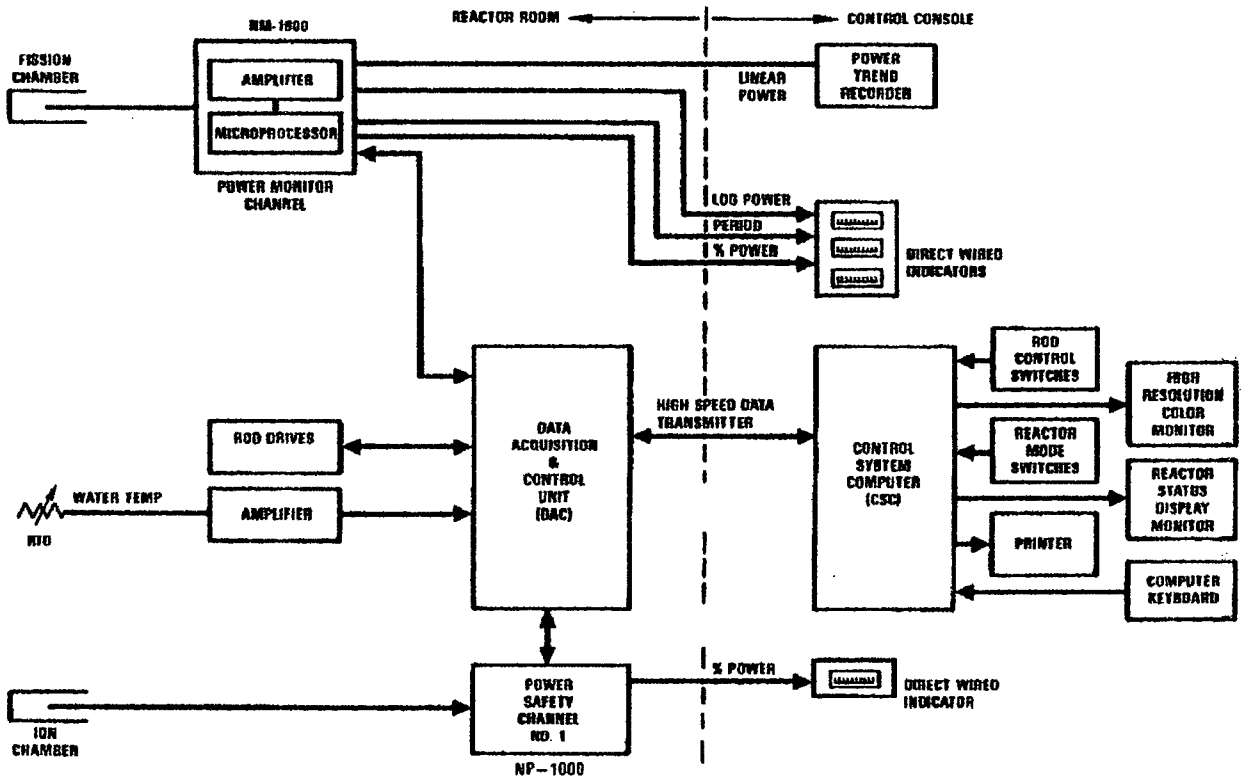

Figure 29.2 Control system block diagram

29.3 The method for calibration and setting trip criteria are manufacturer specified methods and are according to ANSI standards and the DTRR technical specifications. The calibration for the NM1000 is checked daily or whenever the reactor is operated by using a built-in procedure. This built-in procedure is invoked while the reactor is shutdown using the "Prestart Mode" button provided on the control console. During the "Prestart Mode", the DAC computer generates internal signals. The signals are used to test the four calibration points of the NM1000. Other test signals are generated to test the Hi-Power Scram set points of the NM1000 and the NPP1000, to simulate and test loss of high voltge to the power monitors. The control rod withdrawal prohibit is also tested using source level count rates from NM1000 with and without neutron source in the reactor core. Finally, the set points that were not tested during the automated prestart tests, including manual SCRAM, Rod Interlock, CSC watch dog, are done manually using appropriate combination of buttons on the control console. All prestart tests MUST be passed before the reactor is operated.

29.4 Operational experience shows that the system is suitable and sufficient for performing the functions at the requested power level of 300kW

53. NUREG–1537, Part 1, Section 13.1.2, "Insertion of Excess Reactivity" requests the applicant to provide an analysis of reactivity insertion events. Similarly, NUREG–1537, Part 1, Section 4.5.3,"Operating Limits," requests that the applicant provide an analysis of the uncontrolled withdrawal of the highest reactivity control rod. DTRR SAR, Section M.1.2, does not provide sufficient information regarding reactivity insertion events.

53.1 Please provide an analysis of possible reactivity insertion events for the DTRR.

53.2 Please provide an analysis of the uncontrolled rod withdrawal event for DTRR using the highest reactivity control rod.

DTRR Response

The response to this question is awaiting the results of the Neutronics and Thermal-hydraulic models using MNCP and RELAP codes, which are being carried out specifically for the DTRR. A time extension of 60 days is hereby requested for this RAI.