NRC FORM 195 (2-76)

U.S. NUCLEAR REGULATORY COMMISSION

NRC DISTRIBUTION FOR PART 50 DOCKET MATERIAL

DOCKET NUMBER: 50-331

FILE NUMBER:

TO: Mr. B.C. Rusche

FROM: Iowa Elec. Light & Power Co.
Cedar Rapids, Iowa

DATE OF DOCUMENT: 2-13-76

DATE RECEIVED: 2-17-76

XX LETTER — XX NOTORIZED
XX ORIGINAL — XX UNCLASSIFIED
☐ COPY

PROP

INPUT FORM

NUMBER OF COPIES RECEIVED: 40

DESCRIPTION: Ltr notarized 2-13-76 trans the following:

ENCLOSURE: Instructions for Amdt of the Reload No. 1 Lic. Submittal for Duan Arnold Energy Center.....

Appendix A entitled "Bypass Flow Hole Plugs"

Proposed Changes RTS-42B & 53 to DAEC Tech Specs....

(40 cys ea encl rec'd)

PLANT NAME: Duane Arnold Plant

Do Not Remove

ACKNOWLEDGED

SAFETY		FOR ACTION/INFORMATION	ENVIRO	DHL 2-17-76
✓	ASSIGNED AD :	LCAR (6)		ASSIGNED AD :
✓	BRANCH CHIEF :			BRANCH CHIEF :
	PROJECT MANAGER:			PROJECT MANAGER :
✓	LIC. ASST. :	PARRISH		LIC. ASST. :

INTERNAL DISTRIBUTION

✓	REG FILE		SYSTEMS SAFETY		PLANT SYSTEMS		ENVIRO TECH
✓	NRC PDR		HEINEMAN		TEDESCO		ERNST
✓	I & E (2)		SCHROEDER		BENAROYA		BALLARD
✓	OELD				LAINAS		SPANGLER
✓	GOSSICK & STAFF		ENGINEERING		IPPOLITO		
	MIPC		MACCARY				SITE TECH
	CASE		KNIGHT		OPERATING REACTORS		GAMMILL
	HANAUER		SIHWEIL		STELLO		STEPP
	HARLESS		PAWLICKI				HULMAN
					OPERATING TECH		
	PROJECT MANAGEMENT		REACTOR SAFETY	✓	EISENHUT		SITE ANALYSIS
	BOYD		ROSS	✓	SHAO		VOLLMER
	P. COLLINS		NOVAK	✓	BAER		BUNCH
	HOUSTON		ROSZTOCZY	✓	SCHWENCER		J. COLLINS
	PETERSON		CHECK	✓	GRIMES		KREGER
	MELTZ						
	HELTEMES		AT & I		SITE SAFETY & ENVIRO		
	SKOVHOLT		SALTZMAN		ANALYSIS		
			RUTBERG		DENTON & MULLER		

EXTERNAL DISTRIBUTION

				CONTROL NUMBER
✓	LPDR: Cedar Rapids, Iowa	NATL LAB	BROOKHAVEN NATL LAB	
✓	TIC	REG. V-IE	ULRIKSON(ORNL)	
✓	NSIC	LA PDR		
	ASLB	CONSULTANTS		
✓	ACRS 16 ~~HOLDING/CONF~~ ~~To B.A.~~ HOLDING			1507

NRC FORM 195 (2-76)

IOWA ELECTRIC LIGHT AND POWER COMPANY

General Office

CEDAR RAPIDS, IOWA

LEE LIU
VICE PRESIDENT – ENGINEERING

February 13, 1976
IE-76-232

50-331

Mr. Benard C. Rusche, Director
Office of Nuclear Reactor Regulation
U.S. Nuclear Regulatory Commission
Washington, D.C. 20545

Dear Mr. Rusche:

On January 8, 1976, we amended our application dated May 30, 1975, for amendment of DPR-49 and the Technical Specifications for the Duane Arnold Energy Center to authorize operation with the first reload case.

We hereby amend the application in accordance with the regulations of 10 CFR 50 to include:

1. Proposed Technical Specifications for the Rod Sequence Control System,

2. A discussion of the adequacy of bypass flow hole plugs for extended operation,

3. Changes to the proposed Technical Specifications to reflect different peaking factors for 7 x 7 and 8 x 8 fuel, and

4. Minor clerical changes to the January 8, 1976 submittal.

This amendment to the application has been reviewed by the DAEC Operations Committee and the DAEC Safety Committee, and does not involve significant hazards considerations. Three signed and notarized originals and 37 additional copies are transmitted herewith.

This amendment to the application consisting of this letter and enclosure hereto, is true and accurate to the best of my knowledge and belief.

Iowa Electric Light and Power Company

By _____
Lee Liu
Vice President, Engineering

LL/KAM/ms
Encls.
cc: D. Arnold
J. Newman
W. Paulson (NRC)
J. Keppler (NRC)

Sworn and Subscribed to before me on this 13th day of February, 1976.

_____
Notary Public in and for the State of Iowa.

Wendy Rodenhizer
NOTARY PUBLIC
STATE OF IOWA
Commission Expires
September 30, 1976

Enclosure to IE-76-232

INSTRUCTIONS FOR AMENDMENT OF THE RELOAD NO. 1
LICENSING SUBMITTAL FOR DUANE ARNOLD ENERGY CENTER

1. Add Page 7-1 and replace pages iii, 4-7, 4-8, 6-6, 6-9, 6-13, 6-15, 6-15a, 6-16 and 6-17 of the January 8, 1976 Reload No. 1 licensing submittal with enclosed revised pages. Insert Appendix A at the end of the Reload No. 1 licensing submittal.

2. Revise proposed Technical Specifications as detailed on RTS-42B and RTS-53 cover sheets.

TABLE OF CONTENTS

Table 4-2

NOMINAL VALUES OF PARAMETERS USED IN THE STATISTICAL ANALYSIS

Core Thermal Power	3293 MW
Core Flow	102.5 Mlb/hr
Dome Pressure	1010.4 psig
Channel Flow Area	0.1078 ft^2
R-Factor	1.098 (7x7) 1.100 (8x8)

Table 4-3

SUMMARY OF RESULTS

LIMITING ABNORMAL OPERATIONAL TRANSIENTS

Event	ΔCPR 7x7	ΔCPR 8x8
Turbine Trip, without Bypass EOC-2, Rated Conditions	0.33	0.43
Loss of 100° Feedwater Heater, Rated Conditions, Manual Flow Control	0.16	0.19
Rod Withdrawal Error (RBM set to 107%)	0.19	0.15

Table 4-4

GETAB TRANSIENT ANALYSIS

INITIAL CONDITION PARAMETERS

	7x7	8x8
Peaking factors (local, radial and axial)	1,24, 1.170, 1.40	1.22, 1.165, 1.40
R-Factor	1.084	1.102
Bundle Power, MWt	4.983	4.957
Non-fuel Power Fraction	0.04	0.04
Core Flow, Mlb/hr	49.0	49.0
Bundle Flow, 10^3 lb/hr	134.3	125.5
Reactor Pressure, psia	1035	1035
Inlet Enthalpy, Btu/lb	526.3	526.3
Initial MCPR	1.40	1.51

Table 6-1

MAPLHGR, PCT, OXIDATION FRACTION

VERSUS EXPOSURE - PLUGGED

8D274 Fuel

EXPOSURE MWD/T	MAPLHGR KW/FT	P, C, T, DEG-F	OXID FRAC
200.0	10.7	2197	0.040
1000.0	10.7	2195	0.039
5000.0	11.0	2200	0.038
10000.0	11.2	2198	0.036
15000.0	11.1	2199	0.036
20000.0	11.0	2199	0.037
25000.0	10.8	2194	0.036
30000.0	10.8	2197	0.037

Log No. 5C335B SNUMB No. 5197S October 1975

Table 6-2

TRANSIENT INPUT PARAMETERS

Thermal Power	(MWt)	1657	104%
Rated Steam Flow	(lb/hr)	7.18×10^6	105%
Rated Core Flow	(lb/hr)	49.0×10^6	100%
Dome Pressure	psig	1020	
Turbine Pressure	psig	960	
RV Set Point	psig	1090 + 1% to 1110 + 1%	
RV/Capacity (at Set Point)	No./%	6/74.7	
RV Time Delay	(msec)	400	
RV Stroke Time	(msec)	100	
SV Set Point	psig	1240 + 1%	
SV Capacity	No./%	2/18.9	
Dynamic Void Coefficient	(¢/%Rg)	-14.61	
Doppler Coefficient	(¢/°F)	-0.2041	
Average Fuel Temperature	(°F)	1384	
Scram Reactivity Curve		Figure 6-6	
Scram Worth	($)	-31.5	

Figure 6-8 shows the response of the plant to the loss of 100°F of the feedwater heating capability of the plant. This represents the maximum expected single heater (or group of heaters) which can be tripped or bypassed by a single event. The reactor is assumed to be at maximum power conditions on manual flow control when the heater was lost. Note that in manual flow control mode the core flow remains constant throughout the transient. Neutron flux increases above the initial value, however, in order to produce the same steam flow with the higher inlet subcooling. The reactor flux peaks at 124% of initial value and fuel average surface heat flux peaks at 119% of its initial value; a high flux scram occurs 93 seconds after the transient begins. Fuel thermal margins are not exceeded; transient Δ CPR is 0.19 for 8x8 fuel and 0.16 for 7x7 fuel. Transient consequences are milder for lower initial power levels.

6.3.3.2.3 Rod Withdrawal Error

Assumptions and descriptions of rod withdrawal error are given in Reference 1. Figures 6-9 through 6-11 show the results of the worst case condition for Duane Arnold Energy Center Reload-1. The rod block monitor (RBM) set point of 107% is selected to allow for failed instruments for the worst allowable situation. This case demonstrates that even if the operator ignores all alarms during the course of this transient, the RBM will stop rod withdrawal when the critical power ratio (CPR) is 1.21, still greater than the 1.07 MCPR safety limit.

6.3.4 ASME Vessel Pressure Code Compliance

All Main Steamline Isolation Valve Closure-Flux Scram (Safety Valve Adequacy)

The pressure relief system must prevent excessive overpressurization of the primary system process barrier and the pressure vessel to preclude an uncontrolled release of fission products.

The Duane Arnold Energy Center pressure relief system includes six dual function safety/relief valves and two spring safety valves located on the main steam lines within the drywell between the reactor vessel and the first isolation valve. These valves provide the capacity to limit nuclear system overpressurization.

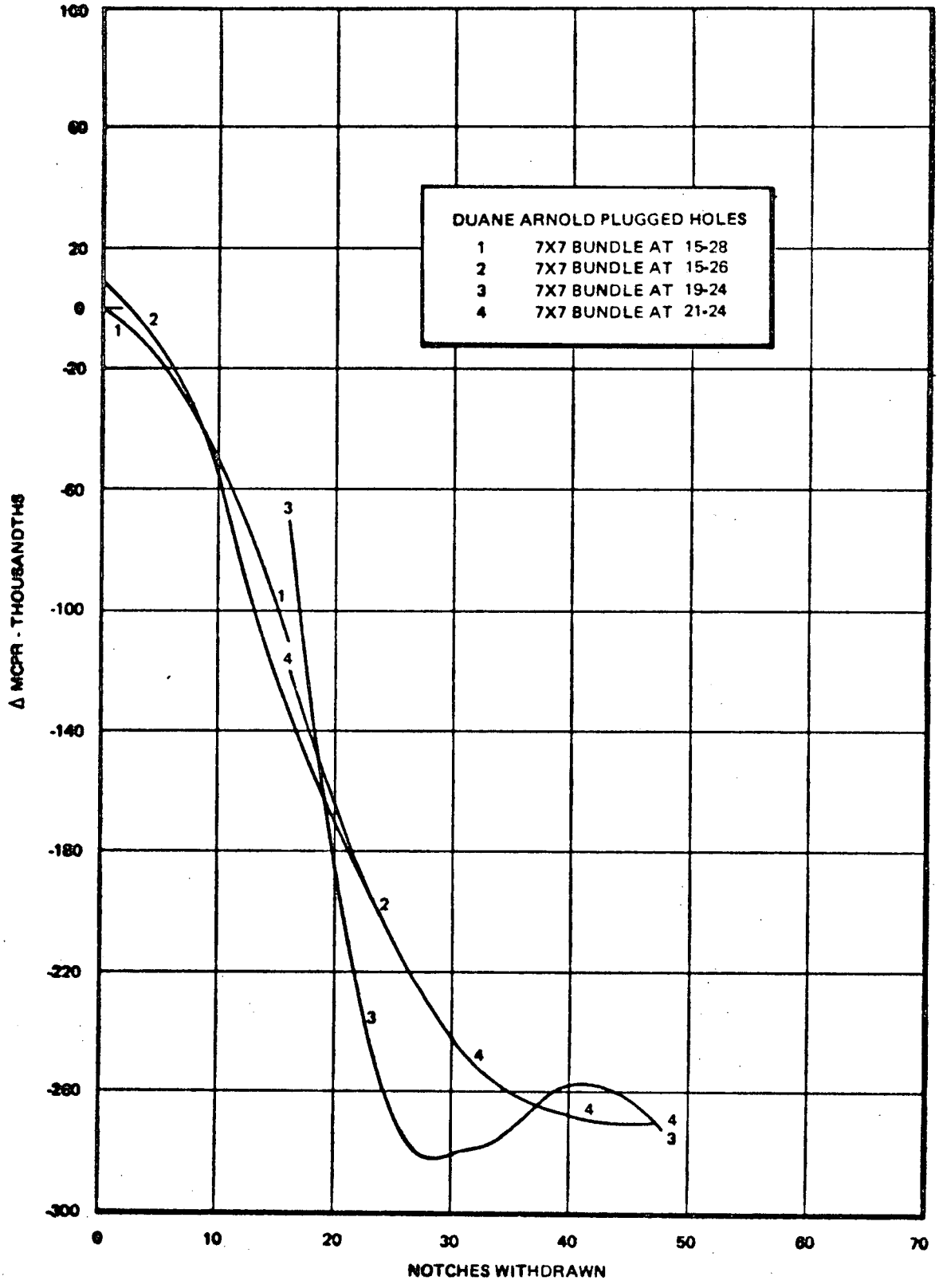

Figure 6-9a. Delta MCPR versus Rod Position - 7x7

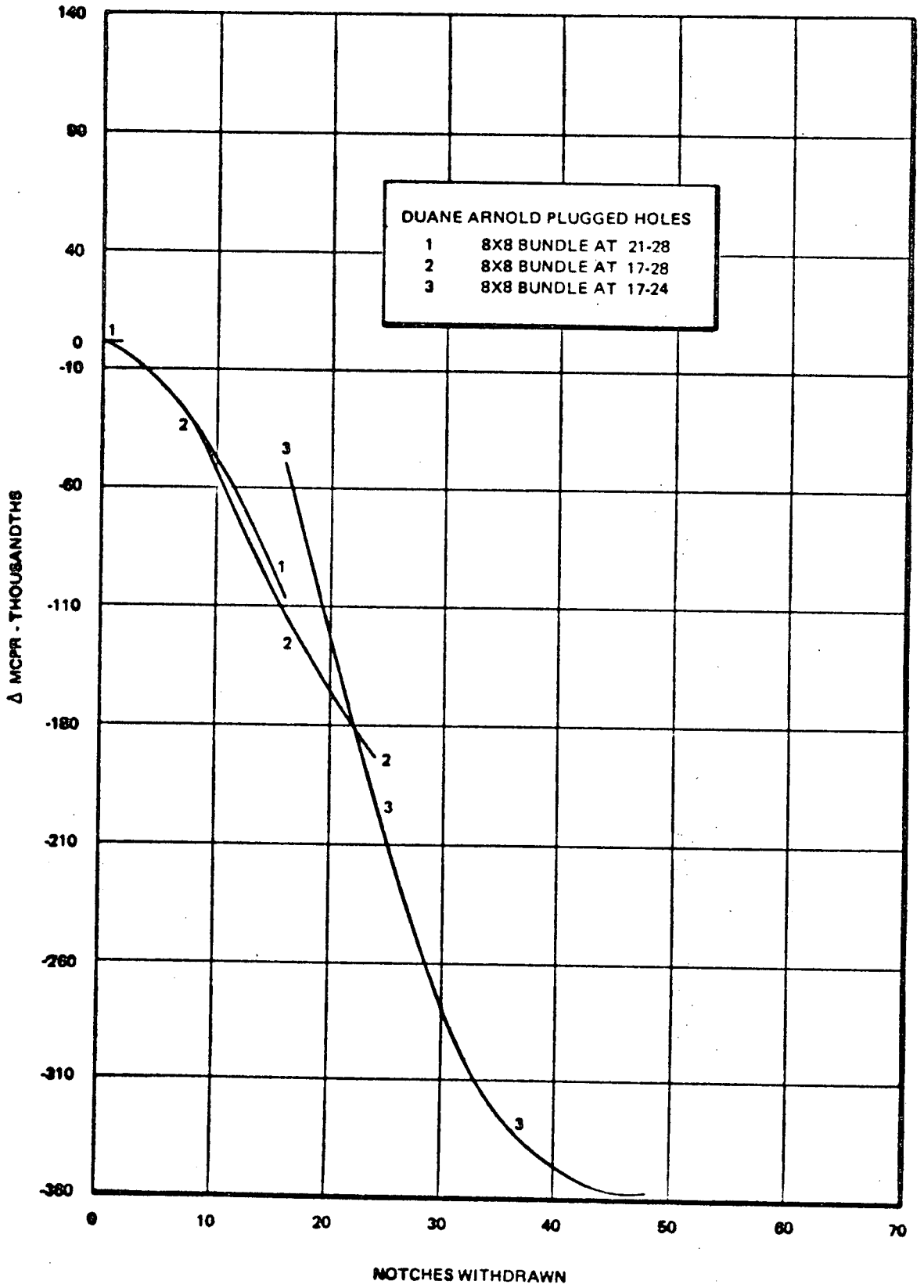

Figure 6-9b. Delta MCPR versus Rod Position - 8x8

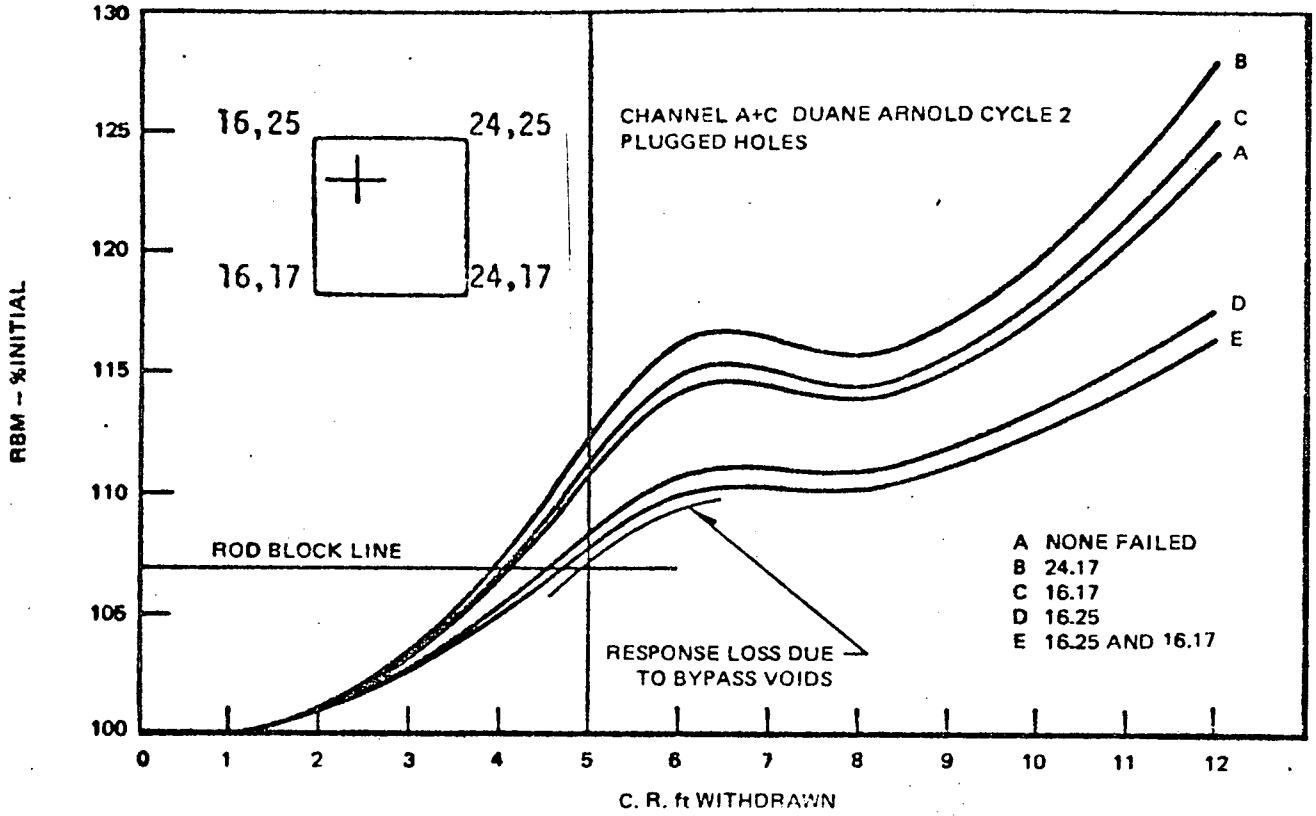

Figure 6-10. RBM Response to Control Rod Motion for Rod Withdrawal Error – Limiting Case, Channel A+C – Bypass Flow Holes Plugged

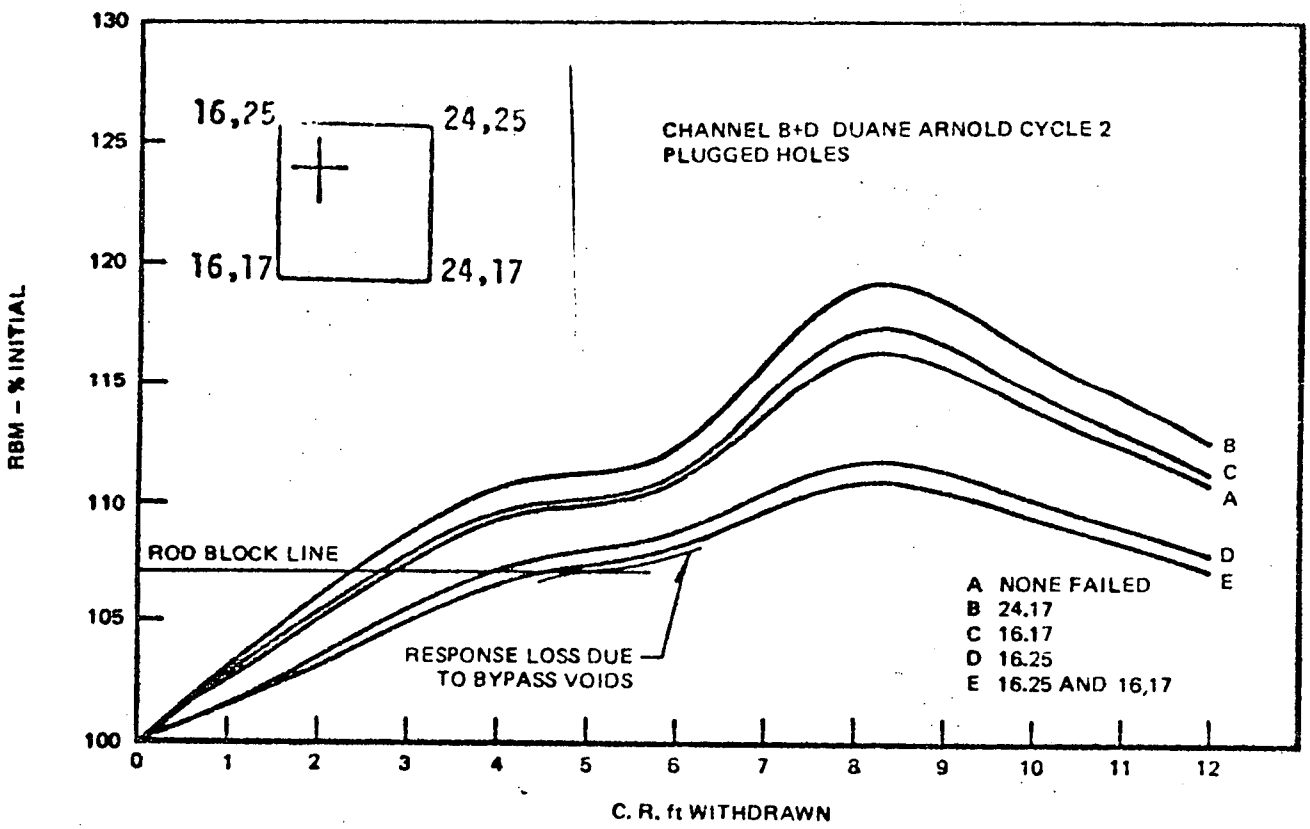

Figure 6-11. RBM Response to Control Rod Motion for Rod Withdrawal Error – Limiting Case, Channel B+D – Bypass Flow Holes Plugged

The ASME Boiler and Pressure Vessel Code requires that each vessel designed to meet Section III be protected from the consequences of pressure in excess of the vessel design pressure:

a. A peak allowable pressure of 110% of the vessel design pressure is allowed (1375 psig for a vessel with a design pressure of 1250 psig).

b. The lowest qualified safety valve set point must be at or below vessel design pressure.

c. The highest safety valve set point must not be greater than 105% of vessel design pressure (1313 psig for a 1250 psig vessel).

Duane Arnold Energy Center's safety/relief and spring safety valves are set to self-actuate at the pressures shown in Table 6-2, thereby satisfying b. and c., above. Requirement a. is evaluated by considering the most severe isolation event with indirect scram.

The event which satisfies this specification is the closure of all main steam-line isolation valves with indirect (flux) scram. The initial conditions assumed are those specified in Table 6-2. Figure 6-12 graphically illustrates the event. An abrupt pressure and power rise occur as soon as the reactor is isolated. Neutron flux reaches scram level in about 1.60 seconds, initiating reactor shut-down. The safety/relief valves open to limit the pressure rise at the bottom of the vessel to 1291 psig. This response provides a 84 psi margin to the ves-sel code limit of 1375 psig. Thus, requirement a. is satisfied and adequate overpressure protection is provided by the pressure relief system.

6.3.5 Thermal-Hydraulic Stability Analysis

Descriptions of the types of thermal-hydraulic stability considered and the ana-lytical method used for evaluation are given in Reference 1. The results for Duane Arnold Energy Center Reload 1 are given below.

7. BYPASS FLOW HOLE PLUGS

7.1 Discussion

Appendix A to this report discusses the adequacy of the bypass flow hole plugs with a 27.5 psi pressure differential across the plugs. Actual measurements of this differential during plugged operation at 100% flow at DAEC were 24.0 psid. Figure A-1 indicates that the design life for this condition is four years.

PROPOSED CHANGE RTS-53 TO DAEC TECHNICAL SPECIFICATIONS

I. Affected Technical Specifications

Appendix A of the Technical Specifications for the DAEC (DPR-49) provide as follows:

> Specifications 3.3 and 4.3, Reactivity Control, describe the Limiting Conditions for Operation and Surveillance Requirements associated with the movement of control rods.

II. Proposed Change in Technical Specifications

The licensees of DPR-49 propose the following changes in the Technical Specifications set forth in I above:

> See the attached sheets. Changes are indicated by a vertical line in the margin.

III. Justification for Proposed Change

These proposed Technical Specification changes are being submitted as requested by the NRC (letter, Mr. G. Lear, Chief, Operating Reactors Branch #3, Division of Reactor Licensing to Mr. D. Arnold, President, Iowa Electric Light and Power Company, dated May 7, 1975). These proposed changes incorporate into the Technical Specifications the limiting conditions for operation and surveillance requirements related to the use of the Rod Sequence Control System as described in Amendments 14 and 15 to the DAEC Final Safety Analysis Report. The modifications to the Rod Sequence Control System described in Amendments 14 and 15 were accepted by the NRC in the letter referenced above.

IV. Review Procedure

These proposed changes have been reviewed by the DAEC Operations Committee and Safety Committee which have found that these proposed changes do not involve a significant hazards consideration.

LIMITING CONDITION FOR OPERATION	SURVEILLANCE REQUIREMENT
3.3 REACTIVITY CONTROL	4.3 REACTIVITY CONTROL
Applicability:	Applicability:
Applies to the operational status of the control rod system.	Applies to the surveillance requirements of the control rod system.
Objective:	Objective:
To assure the ability of the control rod system to control reactivity.	To verify the ability of the control rod system to control reactivity.
Specification:	Specification:
A. Reactivity Limitations	A. Reactivity Limitations
1. Reactivity margin - core loading	1. Reactivity margin - core loading
A sufficient number of control rods shall be operable so that the core could be made subcritical in the most reactive condition during the operating cycle with the strongest control rod fully withdrawn and all other operable control rods fully inserted.	Sufficient control rods shall be withdrawn following a refueling outage when core alterations were performed to demonstrate with a margin of 0.38% Δ k/k that the core can be made subcritical at any time in the subsequent fuel cycle with the analytically determined strongest operable control rod fully withdrawn and all other operable rods fully inserted.
2. Control Rod Exercise	2. Control Rod Exercise
a. Control rods which cannot be moved with control rod drive pressure shall be considered inoperable.	a. Each partially or fully withdrawn operable control rod shall be exercised one notch at least once each week when operating above 30% power. In the event power operation is continuing with two or more

LIMITING CONDITION FOR OPERATION	SURVEILLANCE REQUIREMENT
	inoperable control rods, this test shall be performed at least once each day, when operating above 30% power.
b. The control rod directional control valves for inoperable control rods shall be disarmed electrically and the control rods shall be in such positions that Specification 3.3.A.1 is met.	b. A second licensed operator shall verify the conformance to Specification 3.3.A.2d before a rod may be bypassed in the Rod Sequence Control System.
c. Control rods with inoperable accumulators or those whose position cannot be positively determined shall be considered inoperable.	c. Once per week when the plant is in operation, check status of pressure and level alarms for each CRD accumulator.
d. Control rods with a failed "Full-in" or "Full-out" position switch may be bypassed in the Rod Sequence Control System and considered operable if the actual rod position is known. These rods must be moved in sequence to their correct positions (full-in on insertion or full-out on withdrawal).	
e. Control rods with scram times greater than those permitted by Specification 3.3.C.3 are inoperable, but if they can be inserted with control rod drive pressure they need not be disarmed electrically.	
f. Inoperable control rods shall be positioned such that Specification 3.3.A.1 is met.	

LIMITING CONDITION FOR OPERATION	SURVEILLANCE REQUIREMENTS
1) In addition, whenever the reactor is in the startup or run mode no more than one control rod in any 5 x 5 array may be inoperable (at least 4 operable control rods must separate any 2 inoperable ones). If this Specification cannot be met, the reactor shall not be started, or if at power, the reactor shall be brought to a cold shutdown condition within 24 hours.	
2) All rods within a notch group containing an inoperable rod will be positioned within 1 (one) notch of the inoperable rod whenever the Rod Sequence Control System is required.	
g. During reactor power operation the number of inoperable control rods shall not exceed 8. Specification 3.3.A.1 must be met at all times.	
B. <u>Control Rods</u>	B. <u>Control Rods</u>
1. Each control rod shall be coupled to its drive and have rod position indication available for the "full in" and "full out" position or completely inserted and the control rod directional control valves disarmed electrically. This requirement does not apply in the refuel condition when the reactor is vented. Two control rod drives may be removed as long as Specification 3.3.A.1 is met.	1. The coupling integrity shall be verified for each withdrawn control rod as follows:
	a. When a rod is withdrawn the first time after each refueling outage or after maintenance, observe discernible response of the nuclear instrumentation and rod position indication for the "full in" and "full out" position. However, for initial rods when response is not discernible, subsequent exercising of these rods after the reactor is above 30% power shall be performed to verify instrumentation response.
	b. When the rod is fully withdrawn the first time after each refueling outage or after CRD maintenance, observe that the drive does not go to the overtravel position.

LIMITING CONDITION FOR OPERATION	SURVEILLANCE REQUIREMENT
	c. During each refueling outage observe that any drive which has been uncoupled from and subsequently recoupled to its control rod does not go to the overtravel position.
2. The control rod drive housing support system shall be in place during reactor power operation or when the reactor coolant system is pressurized above atmospheric pressure with fuel in the reactor vessel, unless all control rods are fully inserted and Specification 3.3.A.1 is met.	2. The control rod drive housing support system shall be inspected after reassembly and the results of the inspection recorded.
3.a Whenever the reactor is in the startup or run mode below 30% rated power, the rod sequence control system shall be operable. If the system is determined to be inoperable during power descent in accordance with checks in Specification 4.3.B.3, power may be increased above 30% rated power.	3. Prior to the start of control rod withdrawal towards criticality and prior to attaining 20% rated power during rod insertion at shutdown, the capability of the Rod Worth Minimizer and Rod Sequence Control System to properly fulfill their functions shall be verified by the following checks:
b. During the shutdown procedure no rod movement is permitted following the testing performed between 35% and 20% power level and the automatic reinstatement of the RSCS restraints at the preset power level. Alignment of rod groups shall be accomplished prior to the reinstatement of the Rod Sequence Control System restraints.	a. The capability of the RSCS to properly fulfill its function shall be verified by the following tests: Sequence portion - Select a sequence and attempt to withdraw a rod in the remaining sequences. Move one rod in a sequence and select the remaining sequences and attempt to move a rod in each. Repeat for all sequences. Group Notch Portion - Test the six comparator circuits. Go through each comparator inhibit, initiate test, verify error, and reset. After comparator checks initiate test and observe completion of cycle indicated by illumination of test complete light.
c. Whenever the reactor is in the startup or run modes below 30% rated power the Rod Worth Minimizer shall be operable or a second licensed operator shall verify that the operator at the reactor console is following the control rod program.	
d. Control rod withdrawal sequence shall be established such that the drop of any increment of any one in-sequence control rod would not result in a peak fuel enthalpy greater than 280 cal./gm.	b. The capability of the Rod Worth Minimizer (RWM) shall be verified by the following checks:

LIMITING CONDITION FOR OPERATION	SURVEILLANCE REQUIREMENT
e. If Specifications 3.3.B.3a through d cannot be met, the reactor shall not be started, or if the reactor is in the run or startup modes at less than 30% rated power, it shall be brought to a shutdown condition immediately.	1) The correctness of the control rod withdrawal sequence input to the RWM computer shall be verified.
	2) The RWM computer on line diagnostic test shall be successfully performed.
f. The sequence restraints imposed on the control rods may be removed by the use of the individual rod position bypass switches for scram testing only those rods which are fully withdrawn in the 100% to 50% rod density range.	3) Proper annunciation of the selection error of at least one out-of-sequence control rod in each fully inserted group shall be verified.
	4) The rod block function of the RWM shall be verified by withdrawing the first rod as an out-of-sequence control rod no more than to the block point.
	c. When required, the presence of a second licensed operator to verify the following of the correct rod program shall be verified.
4. Control rods shall not be withdrawn for startup or refueling unless at least two source range channels have an observed count rate equal to or greater than three counts per second.	4. Prior to control rod withdrawal for startup or during refueling, verify that at least two source range channels have an observed count rate of at least three counts per second.
5. During operation with limiting control rod patterns, as determined by the designated qualified personnel, either:	5. When a limiting control rod pattern exists, an instrument functional test of the RBM shall be performed prior to withdrawal of the designated rod(s).
a. Both RBM channels shall be operable: or	
b. Control rod withdrawal shall be blocked: or	
c. The operating power level shall be limited so that the MCPR will remain above 1.07 assuming a single error that results in complete withdrawal of any single operable control rod.	

LIMITING CONDITION FOR OPERATION

C. Scram Insertion Times

1. The average scram insertion time, based on the de-energization of the scram pilot valve solenoids at time zero, of all operable control rods in the reactor power operation condition shall be no greater than:

Rod Position	% Inserted From Fully Withdrawn	Average Scram Insertion Times (sec)
46	4.7	0.37
36	25.6	1.10
26	46.4	1.87
06	88.1	3.41

2. The average of the scram insertion times for the three fastest control rods of all groups of four control rods in a two-by-two array shall be no greater than:

Rod Position	% Inserted From Fully Withdrawn	Average Scram Insertion Times (sec)
46	4.7	0.39
36	25.6	1.17
26	46.4	1.98
06	88.1	3.62

3. Maximum scram insertion time for 90% insertion of any operable control rod should not exceed 7.00 seconds.

SURVEILLANCE REQUIREMENTS

C. Scram Insertion Times

1. After each refueling outage all operable rods shall be scram time tested from the fully withdrawn position with the nuclear system pressure above 950 psig (with saturation temperature) and the requirements of Specification 3.3.B.3.a met. This testing shall be completed prior to exceeding 40% power. Below 20% power, only rods in those sequences (A_{12} and A_{34} or B_{12} and B_{34}) which were fully withdrawn in the region from 100% rod density to 50% rod density shall be scram time tested.

2. Whenever such scram time measurements are made (such as when a scram occurs and the computer is operable) an evaluation shall be made to provide reasonable assurance that proper control rod drive performance is being maintained.

LIMITING CONDITION FOR OPERATION	SURVEILLANCE REQUIREMENT
3.3.D Reactivity Anomalies The reactivity equivalent of the difference between the actual critical rod configuration and the expected configuration during power operation shall not exceed 1% Δk. If this limit is exceeded, the reactor will be shut down until the cause has been determined and corrective actions have been taken as appropriate.	4.3.D Reactivity Anomalies During the startup test program and startup following refueling outages, the critical rod configurations will be compared to the expected configurations at selected operating conditions. These comparisons will be used as base data for reactivity monitoring during subsequent power operation throughout the fuel cycle. At specific power operating conditions, the critical rod configuration will be compared to the configuration expected based upon appropriately corrected past data. This comparison will be made at least every full power month.
E. If Specifications 3.3.A through D above cannot be met, an orderly shutdown shall be initiated and the reactor shall be in the Cold Shutdown condition within 24 hours.	

3.3 and 4.3 BASES

1. Reactivity Limitation

a. The requirements for the control rod drive system have been identified by evaluating the need for reactivity control via control rod movement over the full spectrum of plant conditions and events. As discussed in Subsection 3.4 of the FSAR, the control rod system design is intended to provide sufficient control of core reactivity that the core could be made subcritical with the strongest rod fully withdrawn. This reactivity characteristic has been a basic assumption in the analysis of plant performance. Compliance with this requirement can be demonstrated conveniently only at the time of initial fuel loading or refueling. Therefore, the demonstration must be such that it will apply to the entire subsequent fuel cycle. The demonstration shall be performed with the reactor core in the cold, xenon-free condition and will show that the reactor is subcritical by at least R + 0.38% $\Delta k/k$ with the analytically determined strongest control rod fully withdrawn.

The value of "R", in units of % $\Delta k/k$, is the amount by which the core reactivity, in the most reactive condition at any time in the subsequent operating cycle, is calculated to be greater than at the time of the demonstration. "R", therefore, is the difference between the calculated value of maximum core reactivity during the operating cycle and the calculated beginning-of-life core reactivity. The value of "R" must be positive or zero and must be determined for each fuel cycle.

The demonstration is performed with a control rod which is calculated to be the strongest rod. In determining this "analytically strongest" rod, it is assumed that every fuel assembly of the same type has identical material properties. In the actual core, however, the control cell material properties vary within allowed manufacturing tolerances, and the strongest rod is determined by a combination of the control cell geometry and local K_∞ . Therefore, an additional margin is included in the shutdown margin test to account for the fact that the rod used for the demonstration (the "analytically strongest") is

not necessarily the strongest rod in the core. Studies have been made which compare experimental criticals with calculated criticals. These studies have shown that actual criticals can be predicted within a given tolerance band. For gadolinia cores the additional margin required due to control cell material manufacturing tolerances and calculational uncertainties has experimentally been determined to be 0.38% $\Delta k/k$. When this additional margin is demonstrated, it assures that the reactivity control requirement is met.

b. Reactivity margin - inoperable control rods - Specification 3.3.A.2 requires that a rod be taken out of service if it cannot be moved with drive pressure. If the rod is fully inserted and then disarmed electrically*, it is in a safe position of

*To disarm the drive electrically, four Amphenol type plug connectors are removed from the drive insert and withdrawal solenoids rendering the rod incapable of withdrawal. This procedure is equivalent to valving out the drive and is preferred because, in this condition, drive water cools and minimizes crud accumulation in the drive. Electrical disarming does not eliminate position indication.

maximum contribution to shutdown reactivity. If it is disarmed electrically in a non-fully inserted position, that position shall be consistent with the shutdown reactivity limitation stated in Specification 3.3.A.1. This assures that the core can be shut down at all times with the remaining control rods assuming the strongest operable control rod does not insert. Inoperable bypassed rods will be limited within any group to not more than one control rod of a (5 x 5) twenty-five control rod array. The use of the individual rod bypass switches in the Rod Sequence Control System to substitute for a failed "full in" or "full out" position switch will not be limited as long as the actual position of the control rod is known.

In order to perform shutdown margin and control rod drive scram time tests subsequent to any fuel loading operation as required by the Technical Specifications, the relaxation of the following Rod Sequence Control System restraints is required: (a) The sequence restraints imposed on the control rods may be removed by the use of the individual rod position bypass switches for scram testing only those rods which are fully withdrawn in the 100% to 50% rod density range. (b) Verify that subsequent to the use of the rod position bypass switches rod movement in the 50% rod density to preset power level range is restricted to the single notch mode.

2. Control Rod Withdrawal

a. Control rod drop accidents as discussed in the FSAR can lead to significant core damage. If coupling integrity is maintained, the possibility of a rod drop accident is eliminated. The overtravel position feature provides a positive check as only uncoupled drives may reach this position. Neutron instrumentation response to rod movement provides a verification that the rod is following its drive. Absence of such response to drive movement could indicate an uncoupled condition. Rod position indication is required for proper function of the rod sequence control system and the rod worth minimizer (RWM).

b. The control rod housing support restricts the outward movement of a control rod to less than 3 inches in the extremely remote event of a housing failure. The amount of reactivity which could be added by this small amount of rod withdrawal, which is less than a normal single withdrawal increment, will not contribute to any damage to the primary coolant system. The design basis is given in Subsection 3.5.2 of the FSAR and the safety evaluation is given in Subsection 3.5.4. This support is not required if the reactor coolant system is at atmospheric pressure since there would then be no driving force to rapidly eject a drive housing. Additionally, the support is not required if all control rods are fully inserted and if an adequate shutdown margin with one control rod withdrawn has been demonstrated,

since the reactor would remain subcritical even in the event of complete ejection of the strongest control rod.

c. The Rod Worth Minimizer (RWM) and the Rod Sequence Control System (RSCS) restrict withdrawals and insertions of control rods to prespecified sequences. These sequences are established such that the drop of any in-sequence control rod from the fully inserted position to the position of the control rod drive would not cause the reactor to sustain a power excursion resulting in a peak fuel enthalpy in excess of 280 cal./gm. An enthalpy of 280 cal./gm. is well below the level at which rapid fuel dispersal could occur (i.e., 425 cal./gm.). Primary system damage in this accident is not possible unless a significant amount of fuel is rapidly dispersed. Ref. Subsections 3.6.6, 7.16.5.3, 14.6.2, J.4.13 and Amendments 14 and 15 to the FSAR, NEDO-10527 including Supplements 1, 2 and 3 to NEDO-10527 and the DAEC Reload #1 Licensing Submittal dated January 8, 1976 as amended.

In performing the function described above, the RWM and RSCS are not required to impose any restrictions at core power levels in excess of 20% of rated. Material in the cited references shows that it is impossible to reach 280 calories per gram in the event of a control rod drop occurring at power greater than 20%, regardless of the rod pattern. This is true for all normal and abnormal patterns including those which maximize the individual control rod worth.

At power levels below 20% of rated, abnormal control rod patterns could produce rod worths high enough to be of concern relative to the 280 calories per gram rod drop limit. In this range the RWM and the RSCS constrain the control rod sequences and patterns to those which involve only acceptable rod worths.

The Rod Worth Minimizer and the Rod Sequence Control System provide automatic supervision to assure that out of sequence control rods will not be withdrawn or inserted; i.e., it limits operator deviations from planned withdrawal sequences. They serve as a backup to procedural control of control rod sequences, which limit the maximum reactivity worth of control rods. In the event that the Rod Worth Minimizer is out of service, when required, a second licensed operator or other qualified technical plant employee whose qualifications have been reviewed by the NRC can manually fulfill the control rod pattern conformance functions of this system. In this case, the RSCS is backed up by independent procedural controls to assure conformance.

The functions of the RWM and RSCS make it unnecessary to specify a license limit on rod worth to preclude unacceptable consequences in the event of a control rod drop. At low powers, below 20%, these devices force adherence to acceptable rod patterns. Above 20% of rated power, no constraint on rod pattern is required to assure that rod drop accident consequences are acceptable. Control rod pattern constraints above 20% of rated power are imposed

by power distribution requirements as defined in Sections 3.3.B.5 and 3.3.C.5 of these Technical Specifications. Power level for automatic cutout of the RSCS function is sensed by first stage turbine pressure. Because the instrument has an instrument error of ± 10% of full power, the nominal instrument setting is 30% of rated power. Power level for automatic cut-out of the RWM function is sensed by feedwater and steam flow and is set nominally at 30% of rated power to be consistent with the RSCS setting.

Functional testing of the RWM prior to the start of control rod withdrawal at startup, and prior to attaining 20% rated thermal power during rod insertion while shutting down, will ensure reliable operation and minimize the probability of the rod drop accident.

The RSCS can be functionally tested prior to control rod withdrawal for reactor startup. By selecting, for example, A_{12} and attempting to withdraw, by one notch, a rod or all rods in each other group, it can be determined that the A_{12} group is exclusive. By bypassing to full-out all A_{12} rods, selecting A_{34} and attempting to withdraw, by one notch, a rod or all rods in group B, the A_{34} group is determined exclusive. The same procedure can be repeated for the B groups. After 50% of the control rods have been withdrawn (e.g., groups A_{12} and A_{34}), it is demonstrated that the Group Notch mode for the control

drives is enforced. This demonstration is made by performing the hardware functional test sequence. The Group Notch restraints are automatically removed above 30% power.

During reactor shutdown, similar surveillance checks shall be made with regard to rod group availability as soon as automatic initiation of the RSCS occurs and subsequently at appropriate stages of the control rod insertion.

d. The Source Range Monitor (SRM) system performs no automatic safety system function; i.e., it has no scram function. It does provide the operator with a visual indication of neutron level. The consequences of reactivity accidents are functions of the initial neutron flux. The requirement of at least 3 counts per second assures that any transient, should it occur, begins at or above the initial value of 10^{-8} of rated power used in the analyses of transients cold conditions. One operable SRM channel would be adequate to monitor the approach to criticality using homogeneous patterns of scattered control rod withdrawal. A minimum of two operable SRM's are provided as an added conservatism.

e. The Rod Block Monitor (RBM) is designed to automatically prevent fuel damage in the event of erroneous rod withdrawal from locations of high power density during high power level operation. Two channels are provided, and one of these may be

bypassed from the console for maintenance and/or testing. Tripping of one of the channels will block erroneous rod withdrawal soon enough to prevent fuel damage. This system backs up the operator who withdraws control rods according to written sequences. The specified restrictions with one channel out of service conservatively assure that fuel damage will not occur due to rod withdrawal errors when this condition exists.

A limiting control rod pattern is a pattern which results in the core being on a thermal hydraulic limit [MCPR = 1.40 (7 x 7 array) or 1.50 (8 x 8 array) and LHGR = 18.5 KW/ft (7 x 7 array) or 13.4 KW/ft (8 x 8 array)]. During use of such patterns, it is judged that testing of the RBM system prior to withdrawal of such rods to assure its operability will assure that improper withdrawal does not occur. It is the responsibility of the Reactor Engineer to identify these limiting patterns and the designated rods either when the patterns are initially established or as they develop due to the occurrence of inoperable control rods in other than limiting patterns. Other personnel qualified to perform this function may be designated by the DAEC Chief Engineer.

3. Scram Insertion Times

The control rod system is designed to bring the reactor subcritical at a rate fast enough to prevent fuel damage; i.e., to prevent the

MCPR from becoming less than 1.07. The limiting power transient is that resulting from a turbine trip without bypass. Analysis of this transient shows that MCPR remains greater than 1.07.

After initial fuel loading and subsequent refuelings when operating above 950 psig all control rods shall be scram tested within the constraints imposed by the Technical Specifications and before the 40% power level is reached.

The numerical values assigned to the specified scram performance are based on the analysis of data from other BWR's with control rod drives the same as those on DAEC.

The occurrence of scram times within the limits, but significantly longer than the average, should be viewed as an

APPENDIX A

BYPASS FLOW HOLE PLUGS

A. BYPASS FLOW HOLE PLUGS

A.1 Mechanical Design Description

The plug consists of five basic parts, as shown in Figure 3-1. Identical plugs have previously been installed in nine BWR's. The body provides a means of guiding the device into the bypass flow holes as well as a shoulder to support the plug and form a seal against water flow. The shaft extends through the body. A knob at the top of the shaft provides a means of grabbing the plug during installation and extraction. At the bottom, the latch is attached to the shaft by a pin. The latch is free to rotate during installation. The spring acts against the body and shaft during normal operation to provide the force necessary to offset the pressure differential acting on the body.

Prior to and during installation, the plug latch is rotated 90 degrees from its installed position and is withdrawn and locked in the body. The shaft is gripped by the installation tool, and the plug is inserted into the bypass flow holes. The body engages the rim of the hole. The shaft is pushed to its full extension, thus lowering and unlocking the latch below the underside of the core support plate. The latch then rotates 90 degrees and bears on the bottom of the core support plate. After insertion, the plug is pulled with about 30-lb force to test the placement.

The plug can be removed by gripping the top of the shaft with an extracting tool and applying a force of about 500 pounds. The latch's legs will be plastically deformed and the entire plug withdrawn. The plugs previously installed in one domestic BWR/4 were removed with no loose pieces reported. The force required for removal varied from 500 to 1,300 pounds.

A.1.1 Design Criteria

The following criteria were applied to the design of the bypass flow hole plug:

1. The plugs must be designed to fit into and limit flow through the bypass flow holes to reduce movement of the in-core tubes to acceptable levels.

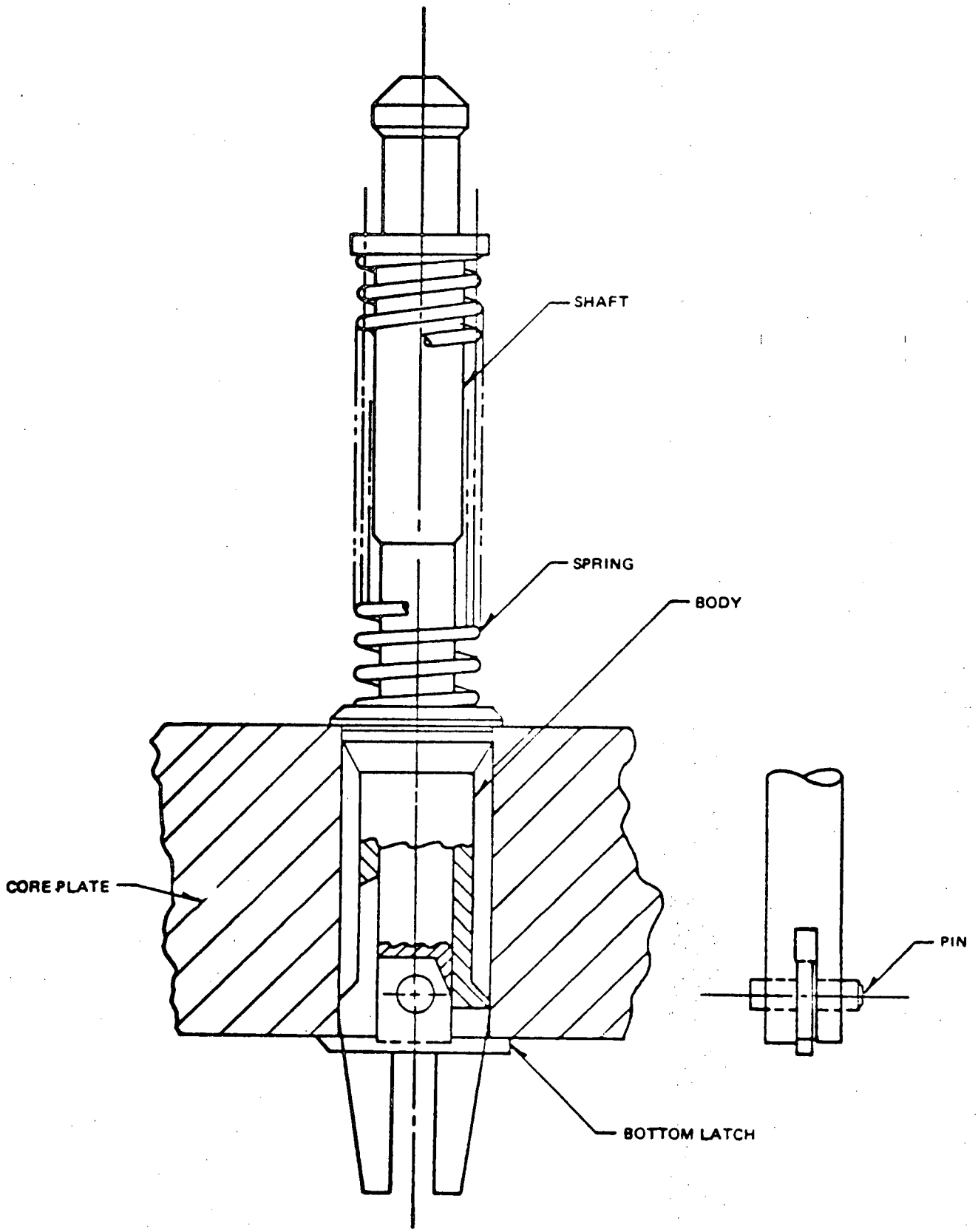

Figure 3-1. Plug Installed in Core Plate

2. The plug must be able to withstand a limiting BWR/4 operating pressure differential of 27.5 psi as well as a worst-case differential pressure of 45.3 psi corresponding to the peak accident differential pressure.

3. Once installed, the plug must be held securely in place until it is permanently removed.

A.1.2 Materials Description and Evaluation

The plug consists of five components:

1. Body - ASTM A276 Type-304 stainless steel

2. Shaft - ASTM A276 Type-304 stainless steel

3. Pin - ASTM A276 Type-304 stainless steel

4. Latch - ASTM A276 or ASME SA-240 Type-304 stainless steel

5. Spring - Inconel X-750, spring temper

All Type-304 stainless steel components are purchased in the solution heat treated condition. The effectiveness of the solution anneal is checked per ASTM-A262 Practice A, "Detecting Susceptibility to Intergranular Attack in Stainless Steel." The body, shaft, and pin are machined, and the latch is machined or punched from bar or strip stock. To eliminate any cold work effects from the punching operation, the latch is resolution annealed after punching.

The Inconel X-750 spring is age hardened for 4 hours at 1200°F.

No structural welds are used in the plug assembly. Two small tack welds are made to retain the pin in the body. These tack welds are made by the TIG process so no flux contamination can occur. Such small tack welds have a negligible

effect on sensitizing the Type-304 base material. In addition, the applied stresses at the weld area are very low.

Plug materials have been selected so that stress corrosion is not a problem in the plug assembly. Laboratory tests and service performance have shown that solution-annealed Type-304 stainless steel is highly resistant to stress corrosion cracking in the BWR environment. The small tack welds have no detrimental effects on the low stressed pin and shaft assembly. General Electric Company has used Inconel X-750 for spring applications in all operating nuclear reactors. Operating performance of this type of spring has been excellent for service life to date of up to 19 years.

The plug assembly will be exposed to radiation, and the total fluence after 40 years exposure is estimated to be approximately $6x10^{20}$ nvt (>1 MeV). The effects of this radiation on the material properties have been examined.[1,2,3,4] The yield strength of Type-304 stainless steel increases markedly after exposure to this amount of radiation. A value of about 75,000 psi at 550°F is predicted for a fluence of $6x10^{20}$ nvt. Reduction in area remains high (over 35%) until fluence exceeds $1x10^{21}$ (>1 MeV). Uniform elongation decreases for fluences exceeding 10^{20} nvt (>1 MeV). Available information shows the 550°F elongation is about 10% at a fluence of $6x10^{20}$ nvt. Notch toughness is also acceptable since about 100 ft-lb of Charpy energy are available at 550°F after irradiation to $1x10^{21}$ nvt. These properties are considered adequate for this application.

Exposure to radiation causes relaxation in Inconel X-750 springs. The amount of relaxation expected in this application has been calculated in accordance with information supplied by Klahn[5] and Hyatt.[6] This relaxation has been factored into the design. In addition, a surveillance program is proposed to check spring relaxation. Two plugs will be removed from two plants after exposures of 2 years, 5 years, and 10 years and relaxation will be measured.

A.2 Stress Analysis

A.2.1 Summary

A stress analysis was performed on the plug installed in the core support plate. Normal operating conditions, pressure and thermal transients, and installation/

removal operations were considered in the analysis. The results show acceptable stress levels in all plug components during normal operation and pressure and thermal transients. Plug assembly cycles produce extreme fiber torsional shear stresses in the spring near yield strength. Spring tests show that a loss of spring free length results from the assembly cycle but is predictably small and will not detract from the functional adequacy of the spring.

Some load relaxation will be experienced after plug installation due to elevated temperature and radiation. Elevated-temperature testing has shown the thermal-induced relaxation to be a small percentage of the total preload. Creep in the stainless steel latch was experimentally investigated and was found to have negligible effect on plug preload. The initial minimum preload margin is 2.1 times the limiting operating static differential force across the plug. The combined effect on the plug preload of the plug assembly cycles, the spring relaxation, and the latch creep will result in a final operating preload margin of 2.0 at the end of 1 year of reactor service for plugs exposed to a 27.5 psi pressure differential.

The analysis for the load required to extract the plug from the core plate shows that the assembly will maintain its integrity during this operation.

A.2.2 Component Stress

The Inconel X-750 compression spring, with an initial maximum free length of 4.45 in., is compressed prior to plug installation to a length of 1.88 in., producing an elastically calculated, extreme fiber torsional shear stress, including transverse shear effects, of 156 ksi. This stress level is near the yield strength of the spring and will produce a slight redistribution of stress across the wire section. In addition, the springs are compressed to the 1.88-in. length during plug assembly and during installation. In service, the spring is compressed from the 4.45-in. free length a maximum of 1.722 in., producing an extreme fiber torsional shear stress of 115.9 ksi which includes the transverse shear effect and the stress concentration caused by the curvature of the coil. The in-service spring compression produces a maximum preload of 53.7

pounds. This preload is reacted in compression between the body and the core plate top surface, and in tension through the shaft, pin, and latch with the latch then bearing against the core plate bottom surface. Component stresses due to the maximum preload a limiting operating pressure of 27.5 psi are as follows:

1. Bearing stress, body on core plate = 452 psi

2. Tensile stress, shaft minimum section = 2013 psi

3. Bearing stress, pin in shaft hole = 1242 psi

4. Shear stress, pin in shaft hole = 1048 psi

5. Bending stress, spring on shaft retainer = 3413 psi

6. Pin bending stress = 2331 psi

7. Pin average transverse shear stress = 605 psi

8. Bearing stress, pin in latch hole = 2887 psi

9. Tensile stress, latch minimum area = 2568 psi

10. Shear stress, pin in latch hole = 1838 psi

11. Bearing stress, latch on core plate = 2468 psi

12. Bending stress, latch leg = 23,982 psi

13. Latch average transverse shear stress = 2545 psi

The preceding stress values include the effect of a 27.5-psi pressure differential across the plug, representing rated flow conditions for the limiting BWR/4. Duane Arnold has normal operating and worst case pressure differentials of less than 27.5 and 45.3 psi. A worst-case differential pressure across the plug of

45.3 psi, corresponding to an accident, will result in stresses 5.7% higher than those shown, or in the case of the latch leg, bending stress of 25,350 psi. Unless the differential pressure across the net area of the body exceeds the spring preload, the additional force in the spring due to the pressure approaches zero. For the 45.3-psi differential pressure, the force on the body is 27.2 pounds. For a minimum preload of 35.1 pounds, which is based on the minimum 4.2-in. free length, the preload will resist this worst-case static pressure differential with no plug lifting or increased spring loading. A creep test of the latch at 550°F with a constant 46-lb applied load showed negligible latch creep and, therefore, negligible contribution to preload relaxation.

To remove the plug assembly from the core plate, a force is slowly applied to the top of the shaft; the latch legs, which are the most highly stressed area along the load path, bend plastically inward, allowing the assembly to be extracted from the hole in the core support plate. Extraction tests have shown that a minimum load of 370 pounds is required. This load is a factor of 6.3 above the combined maximum preload plus operating differential pressure load used to derive the stresses listed above. After increasing the applicable stresses by a factor of 6.3 it can be seen that the calculated latch leg elastic stress exceeds the ultimate strength, while the maximum primary stress in the remaining locations (shear tear-out stress at the latch hole) is limited to less than the yield strength. These results have been demonstrated in the extraction tests wherein the stainless steel latch legs deform plastically and no evidence of yielding is found at other locations.

A.2.3 Allowable Stresses

Tests of the Inconel X-750 spring material (spring temper condition with heat treatment at 1200°F for 4 hours and air cooled) show an ultimate tensile strength of 264 ksi. Based on Huntington Alloy Products Division data for compression springs of this material and heat treatment, a yield strength in shear at 550°F of 158 ksi has been established. This value is based on shearing yield's being 70% of tensile yield, and tensile yield's being 90% of tensile ultimate.

For the annealed Type-304 stainless steel (ASTM A276) at 550°F, the ASME Section III S_M value is 16.9 ksi, 1.5 S_M is 25.35 ksi, and the S_Y is 18.8 ksi.

A.2.3.1 Comparison of Calculated and Allowable Stresses

The operating shear stress in the Inconel X-750 spring was shown to be 115.9 ksi. This is the maximum level prior to any spring load relaxation and remains essentially unchanged during pressure transients. This level represents 73% of the shearing yield and is in the range of maximum stress at temperature as recommended by the International Nickel Company, Huntington Alloy Products Division.

The maximum operating stress in the Type-304 stainless steel components occurs in the latch legs where the primary bending intensity is 23,982 psi. During worst-case pressure transients, this stress has been shown to increase to 25,350 psi. The 1.5 S_M limit on primary bending of 25,350 psi is met in both cases.

A.2.3.2 Design Life

The plug design life is established on the basis of the spring preload margin of 2 times the normal operating static pressure differential force across the plug. The limiting normal operating static pressure differential force against the plug is always less than the available preload and the plug body will remain seated in the bypass flow hole during limiting normal operating conditions for 35 years of reactor service. However, the preload margin is decreased from 2.1 to 2.0 at the end of 1 year for plugs exposed to 27.5 psi pressure differential. Figure A-1 shows the plug design life as a function of the normal operating core support plate differential pressure to maintain a preload margin of 2. Duane Arnold has a normal operating pressure differential of less than 27.5 psi and the extended plug life is determined from Figure A-1.

A.2.4 Fatigue Analysis

No significant plug component stress cycles can be identified for use in a fatigue evaluation. As previously shown, pressure transients produce negligible stress cycles. The most severe hypothetical temperature distribution that can reasonably occur in the assembly produces negligible thermal stresses (core support plate at 550°F, plug assembly at 100°F). Stresses produced as a result of the dissimilar spring and plug materials are also negligible.

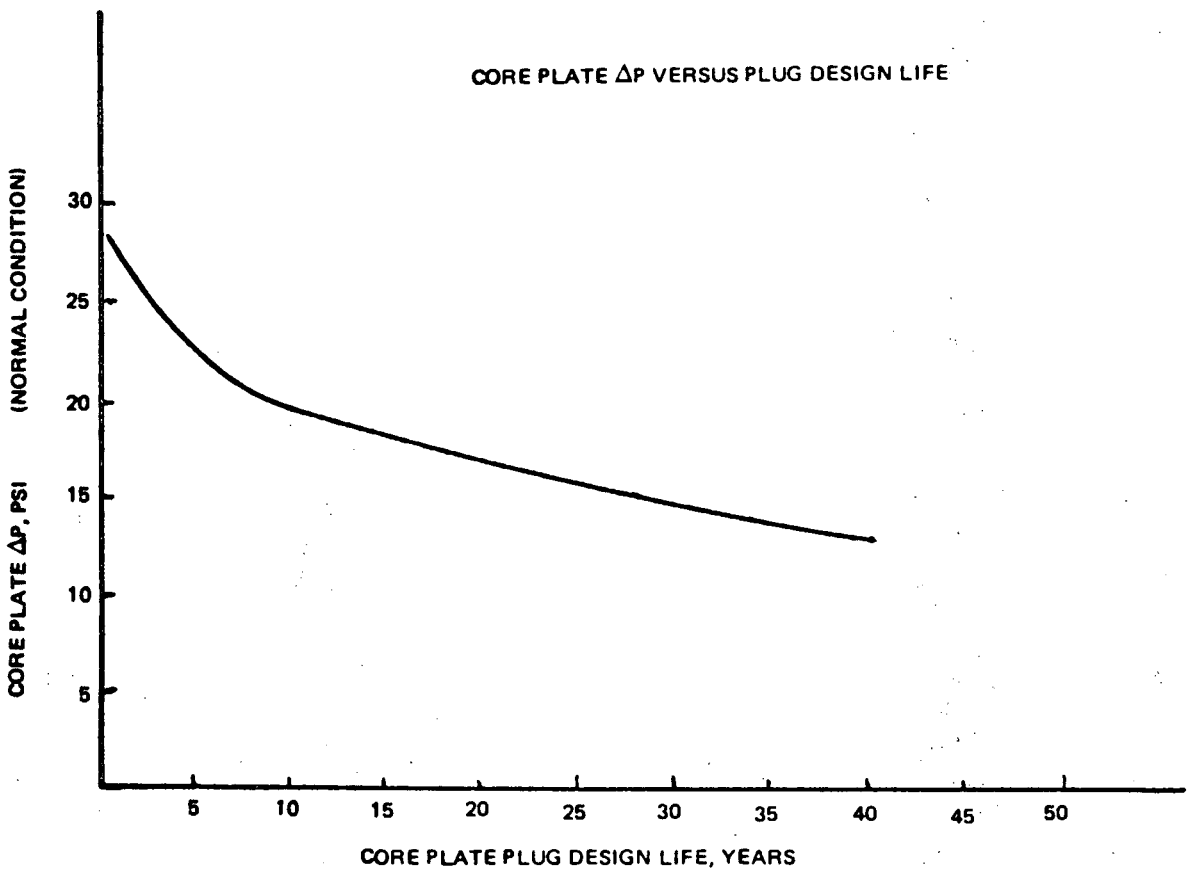

Figure A-1. Core Plate Normal Operating ΔP versus Plug Design Life to Maintain a Preload Margin of 2

A.2.5 Vibration Analysis

A.2.5.1 Pump Pulsations

Recirculation pump shaft vibration frequency at rated conditions for BWR/4's (1400-1700 rpm) range from 23 to 28 Hz. This frequency is not observed in the reactor. The frequency observed is blade frequency and vane frequency, which are 5 times the shaft frequency or about 140 Hz. The natural frequency of the plug body oscillating vertically on the spring has been calculated at 38 Hz. Since the pump pulsation frequency is so far removed from the body frequency, body resonance is precluded.

A.2.5.2 Self-Excited Motion

Pressure difference = 27.5 psi (limiting normal operation across plug)

Net plug area = 0.59 in.^{2}

Therefore, force on body = 16.2 lb

If the body should vibrate at its 38 Hz natural frequency, the 16.2-lb force on the body would fluctuate with a half-sine shape since the body can move upward only.

A Fourier decomposition shows the first periodic Fourier force amplitude is 8.1 pounds, with period T = 1/38 or the body natural period. This is the primary component of the oscillatory pressure equivalent to the 16.2-lb half-sine force. The minimum spring preload downward on the body is 33 pounds at the end of 1 year or 4 times the equivalent periodic Fourier force amplitude. Therefore, a load amplification factor of 4 or greater in the body/spring system would be required for self-excited motion. It should be noted that the factor of 4 is maintained at the end of plug design life as determined from Figure A-1 with respective pressure differential.

Note that this amplification factor requirement represents a lower bound solution in that the most unfavorable conditions of the flow are assumed. The major as-

sumptions are: (a) when the plug body is lifted from the core plate, differential fluid pressure acting on the body immediately relieves to zero, and (b) that the existing leakage is neglected. If assumption (a) is not fulfilled, (i.e., if the differential pressure does not diminish to zero), the net oscillating force acting on the body will be less than 16.2 pounds and the first Fourier component will be less than 8.1 pounds. Therefore, a system amplification factor of greater than 4 is required to sustain the self-excited motion. Also, with the present leakage, the pressure difference across the core support plate at the bypass flow hole becomes smaller due to the transformation of the pressure head into velocity head. In this case, the amplification factor has to be greater than 4 for self-excited motion.

Also note that since the net force due to pressure acting on the plug (16.2 pounds) is less than the preload (33 pounds at the end of 1 year), a proper initial disturbance is required to initiate the self-excited motion. This can be in the form of a sudden large force to overcome the preload, or a proper dynamic excitation with proper frequency and amplitude to overcome the preload. However, once the preload is overcome initially, the force due to pressure difference with a sufficient amplification factor (4) will suffice to maintain the motion as self-excited.

The preceding values were based on the effect of 27.5 psi pressure differential across the plug, representing rated flow conditions for the limiting BWR/4. Duane Arnold has a normal operating pressure differential of less than 27.5 psi. The minimum spring preload downward on the body is 16.5 pounds at the end of 35 years of reactor service.

No self-excited motion was observed in the 32-bundle test facility described in Reference 7; i.e., no initial disturbance large enough to initiate self-excited motion exists in the simulated condition. Recent tests have shown the vibration spectra indicated no resonance or instability of the plug assembly with or without the impingement flow from the lower fuel tie plate holes. An examination of pressures expected in the reactor under normal and upset operational conditions reveals no disturbance of sufficient magnitude to initiate self-excited motion. Therefore, it is concluded that no motion to unseat the plug from the core plate can occur for in-reactor service.

A.2.6 Wear Evaluation

Room temperature flow tests of production plug assemblies were conducted to assess vibration conditions that would occur during reactor service. The plug assemblies were inserted through nominal 1-in.-diameter holes in a 2-in.-thick plate in the full-size test facility fabricated to simulate the hole geometry of the reactor vessel core support plate.

With no impingement flow from the lower fuel tie plate holes on the plug, the flow test has disclosed no evidence of vibration.

A.3 REFERENCES

1. "Effects of Neutron Irradiation on Mechanical Properties of 347 Stainless Steel," in "Effects of Radiation on Structural Metals," ASTM STP426, p. 487.

2. "Radiation Effects Magazine," p. 128 (1968).

3. Private Communication from M. Kangilaski, General Electric Company, Breeder Reactor Department, Sunnyvale, California.

4. J. R. Hawthorne, "Notch Toughness of Austenitic Stainless Steel Weldments with Nuclear Irradiation," to be published in J. Nucl. Mat.

5. D. H. Klahn, "In-Reactor Stress Relaxation of Inconel X-750," December 1974, (EDTC 231, Revision 1).

6. B. Z. Hyatt, "Degradation of the Stress Relaxation Properties of Selected Reactor Materials in a Fast Neutron Flux," March 1973, (WAPD-TM-881 (1))

7. "Peach Bottom Atomic Power Station, Units 2 and 3, Safety Analysis Report for Plant Modifications to Eliminate Significant In-Core Vibrations," October 1975 (NEDO-20994).

PROPOSED CHANGE RTS-42B TO DAEC TECHNICAL SPECIFICATIONS

I. Affected Technical Specifications

Proposed changes to Appendix A of the Technical Specifications for DPR-49 submitted to the Nuclear Regulatory Commission on January 8, 1976 reflecting the results of safety and transient analyses performed to support Duane Arnold Energy Center reload number one.

II. Proposed Change in Technical Specifications

The licensees of DPR-49 propose the following change in the Technical Specifications set forth in I above:

Change the total peaking factor from "2.62" to "2.61 (7 x 7 array) or 2.43 (8 x 8 array)" as indicated on the attached sheets. Attached sheets 1.1-1, 1.1-2 and 1.1-17 replace sheets submitted on January 8, 1976. The balance of the sheets were not a part of the previous submittal and, therefore, should be added to that submittal. In addition, Figure 2.1-2 has been deleted.

III. Justification for Proposed Change

The change is required since the total peaking factor is different for 8 x 8 array fuel than 7 x 7 array fuel.

IV. Review Procedures

This proposed change has been reviewed by the DAEC Operations Committee and Safety Committee which have found that this proposed change does not involve a significant hazards consideration.

TECHNICAL SPECIFICATIONS

LIST OF FIGURES

SAFETY LIMIT

1.1 FUEL CLADDING INTEGRITY

Applicability:

Applies to the interrelated variables associated with fuel thermal behavior

Objective:

To establish limits which ensure the integrity of the fuel cladding.

Specifications:

A. Reactor Pressure > 785 psig and Core Flow > 10% of Rated.

The existence of a minimum critical power ratio (MCPR) less than 1.07 shall constitute violation of the fuel cladding integrity safety limit.

B. Core Thermal Power Limit (Reactor Pressure ≤ 785 psig or Core Flow ≤ 10% of Rated)

When the reactor pressure is ≤ 785 psig or core flow is less than 10% of rated, the core thermal power shall not exceed 25 percent of rated thermal power.

LIMITING SAFETY SYSTEM SETTING

2.1 FUEL CLADDING INTEGRITY

Applicability:

Applies to trip settings of the instruments and devices which are provided to prevent the reactor system safety limits from being exceeded.

Objective:

To define the level of the process variables at which automatic protective action is initiated to prevent the fuel cladding integrity safety limits from being exceeded.

Specifications:

The limiting safety system settings shall be as specified below:

A. Neutron Flux Trips

1. APRM High Flux Scram When In Run Mode.

For operation with a peaking factor less than 2.61 (7 x 7 array) or 2.43 (8 x 8 array), the APRM scram trip setpoint shall be as shown on Fig. 2.1-1 and shall be:

$$S \leq (0.66W + 54)$$

with a maximum setpoint of 120% rated power at 100% rated recirculation flow or greater.

SAFETY LIMIT	LIMITING SAFETY SYSTEM SETTING
C. Power Transient To ensure that the Safety Limits established in Specification 1.1.A and 1.1.B are not exceeded, each required scram shall be initiated by its primary source signal. A Safety Limit shall be assumed to be exceeded when scram is accomplished by a means other than the Primary Source Signal. D. With irradiated fuel in the reactor vessel, the water level shall not be less than 12 in. above the top of the normal active fuel zone.	Where: S = Setting in percent of rated power (1,593 MWt). W = Recirculation loop flow in percent of rated flow. Rated recirculation loop flow is that recirculation loop flow which corresponds to 49×10^6 lb/hr core flow. MTPF = Actual Maximum Total peaking factor. For a peaking factor greater than 2.61 (7 x 7 array) or 2.43 (8 x 8 array), the APRM scram setpoint shall be: $S \leq (0.66\ W + 54)\ \frac{(\ *\ )}{MTPF}$ NOTE: These settings assume operation within the basic thermal design criteria. These criteria are LHGR $\leq$ 18.5 KW/ft (7 x 7 array) or 13.4 KW/ft (8 x 8 array) and MCPR $\geq$ 1.40 K_f (7 x 7 array) or $\geq$ 1.50 K_f (8 x 8 array), where K_f is defined by Figure 3.12-1. Therefore, at full power, operation is not allowed with total peaking factor greater than * even if the scram setting is reduced. If it is determined that either of these design criteria is being violated during operation, action must be taken immediately to return to operation within these criteria. 2. APRM High Flux Scram When in the REFUEL or STARTUP and HOT STANDBY MODE. The APRM scram shall be set at less than or equal to 15 percent of rated power. * 2.61 (7 x 7 array) or 2.43 (8 x 8 array)

SAFETY LIMIT	LIMITING SAFETY SYSTEM SETTING
	3. APRM Rod Block When in Run Mode. For operation with combinations of power and peak flux below the curve for total peaking factor of * in Fig. 2.1-2 the APRM Control Rod Block setpoint shall be as shown on Fig. 2.1-1 and shall be: $S \leq (0.66\ W + 42)$ The definitions used above for the APRM scram trip apply. For a peaking factor greater than 2.61 (7 x 7 array) or 2.43 (8 x 8 array), the APRM Control Rod Block setpoint shall be: $S \leq (0.66\ W + 42)\ \frac{(\ *\ )}{MTPF}$
	4. IRM - The IRM scram shall be set at less than or equal to 120/125 of full scale.
	B. Scram and Isolation on reactor low water level ≥ 514.5 inches above vessel zero (+12" on level instruments)
	C. Scram - turbine stop valve closure ≤ 10 percent valve closure
	D. Turbine control valve fast closure - scram shall occur within 30 milliseconds of the start of turbine control valve fast closure.

* 2.61 (7 x 7 array) or 2.43 (8 x 8 array)

during operation. Reducing this operating margin would increase the frequency of spurious scrams which have an adverse effect on reactor safety because of the resulting thermal stresses. Thus, the APRM scram trip setting was selected because it provides adequate margin for the fuel cladding integrity Safety Limit yet allows operating margin that reduces the possibility of unnecessary scrams.

The scram trip setting must be adjusted to ensure that the LHGR transient peak is not increased for any combination of MTPF and reactor core thermal power. The scram setting is adjusted in accordance with the formula in Specification 2.1.A.1, when the maximum total peaking factor is greater than 2.61 (7 x 7 array) or 2.43 (8 x 8 array).

Analyses of the limiting transients show that no scram adjustment is required to assure MCPR $\geq$ 1.07 when the transient is initiated from MCPR $\geq$ 1.40 (7 x 7 array) or $\geq$ 1.50 (8 x 8 array).

2. <u>APRM High Flux Scram (Refuel or Startup & Hot Standby Mode)</u>.

For operation in these modes the APRM scram setting of 15 percent of rated power and the IRM High Flux Scram provide adequate thermal margin between the setpoint and the safety limit, 25 percent of rated. The margin is adequate to accommodate anticipated maneuvers associated with power plant startup. Effects of increasing pressure at zero or low void content are minor, cold water from sources available during startup is not much colder than that already in the system, temperature coefficients are small, and control rod patterns are constrained to be uniform by operating procedures backed up by the rod

TABLE 3.1-1

REACTOR PROTECTION SYSTEM (SCRAM) INSTRUMENTATION REQUIREMENT

Minimum No. of Operable Instrument Channels for Trip System (1)	Trip Function	Trip Level Setting	Modes in Which Function Must be Operable			Number of Instrument Channels Provided by Design	Action (1)
			Refuel (6)	Startup	Run		
1	Mode Switch in Shutdown		X	X	X	1 Mode Switch (4 Sections)	A
1	Manual Scram		X	X	X	2 Instrument Channels	A
2	IRM High Flux	≤ 120/125 of Full Scale	X	X	(5)	6 Instrument Channels	A
2	IRM Inoperative		X	X	(5)	6 Instrument Channels	A
2	APRM High Flux	(.66W+54) (* /P.F.) (11) (12)			X	6 Instrument Channels	A or B
2	APRM Inoperative	(10)	X	X	X	6 Instrument Channels	A or B
2	APRM Downscale	≥ 5 Indicated on Scale			(9)	6 Instrument Channels	A or B
2	APRM High Flux in Startup	≤ 15% Power	X	X		6 Instrument Channels	A
2	High Reactor Pressure	≤ 1035 psig	X(8)	X	X	4 Instrument Channels	A

* 2.61 (7 x 7 array) or 2.43 (8 x 8 array)

TABLE 3.2-C

INSTRUMENTATION THAT INITIATES CONTROL ROD BLOCKS

Minimum No. of Operable Instrument Channels Per Trip System	Instrument	Trip Level Setting	Number of Instrument Channels Provided by Design	Action
2	APRM Upscale (Flow Biased)	$\leq (0.66W + 42)\ (\frac{*}{P.F})$ (2)	6 Inst. Channels	(1)
2	APRM Upscale (Not in Run Mode)	$\leq$ 12 indicated on scale	6 Inst. Channels	(1)
2	APRM Downscale	$\geq$ 5 indicated on scale	6 Inst. Channels	(1)
1 (7)	Rod Block Monitor (Flow Biased)	$\leq (0.66W + 41)\ (\frac{*}{TPF})$ (2)	2 Inst. Channels	(1)
1 (7)	Rod Block Monitor Downscale	$\geq$ 5 indicated on scale	2 Inst. Channels	(1)
2	IRM Downscale (3)	$\geq$ 5/125 full scale	6 Inst. Channels	(1)
2	IRM Detector not in Startup Position	(8)	6 Inst. Channels	(1)
2	IRM Upscale	$\leq$ 108/125	6 Inst. Channels	(1)
2 (5)	SRM Detector not in Startup Position	(4)	4 Inst. Channels	(1)
2 (5) (6)	SRM Upscale	$\leq 10^5$ counts/sec.	4 Inst. Channels	(1)

* 2.61 (7 x 7 array) or 2.43 (8 x 8 array)

NOTES FOR TABLE 3.2-C

1. For the startup and run positions of the Reactor Mode Selector Switch, there shall be two operable or tripped trip systems for each function. The SRM and IRM blocks need not be operable in "Run" mode, and the APRM and RBM rod blocks need not be operable in "Startup" mode. If the first column cannot be met for one of the two trip systems, this condition may exist for up to seven days provided that during that time the operable system is functionally tested immediately and daily thereafter; if this condition lasts longer than seven days, the system shall be tripped. If the first column cannot be met for both trip systems, the systems shall be tripped.

2. W is the recirculation loop flow in percent of design. Trip level setting is in percent of rated power (1593 MWt). Refer to Limiting Safety System Settings for variation with peaking factors. Peaking factor is applicable only when it exceeds 2.61 (7 x 7 array) or 2.43 (8 x 8 array).

3. IRM downscale is bypassed when it is on its lowest range.

4. This function is bypassed when the count rate is >100 cps.