PROCESS CONTROL PROGRAM FOR DEWATERING

ION EXCHANGE RESINS AND FILTER MEDIA
(PACIFIC NUCLEAR SYSTEMS, INC.)

PRCP-D
Revision 1

February 19, 1987

Duane Arnold Energy Center

Iowa Electric Light and Power Company

Approved By:	Roger Stigen Radwaste Supervisor	2-25-87 Date
Approved By:	[illegible] Radiation Protection Supervisor	2-26-87 Date
Reviewed By:	[illegible] Chairman, Operations Committee	3-3-87 Date
Approved By:	[illegible] Plant Superintendent - Nuclear	3-5-87 Date

FOR INFORMATION ONLY

Introduction

This Process Control Program describes the dewatering of wet radioactive waste solids from liquid systems at the Duane Arnold Energy Center and packaging the waste in suitable containers for burial.

Wet wastes are those wastes produced from the liquid radwaste treatment system. These wastes may typically be described as resins (bead and powdered), filter material, waste sludges, and filter precoat media. The wastes included in this program are specifically those containing nuclides with a radioactive half-life greater than 5 years and a concentration in the resin of greater than $1Ci/m^3$. The dewatering process removes liquid from the waste to meet the criterion in 10 CFR Parts 61.56 (a)(3) and 61.56 (b)(2) for free-standing liquid. Stability is provided by a high integrity container (HIC) as authorized by Part 61.56 (b)(1).

Vendor

Pacific Nuclear Systems, Inc. through its operating subsidiaries Nuclear Packaging, Inc. and NuPac Services, Inc. is a vendor of dewatering and packaging services of the high integrity containers used at the DAEC. Nuclear Packaging, Inc. Topical Report No. TP-02-P-A, Rev. 1, has been reviewed by the NRC and accepted for reference by the licensee. The acceptance letter and NRC Safety Evaluation Report are included as Attachment A.

Dewatering System Description

The NuPac Dewatering Unit is a portable or permanent in-plant system containing all necessary equipment and controls for removing the free water from ion-exchange resins and filter media. It consists of a dewatering fill head, a piping skid, a blower skid, a water chiller, a control system and the necessary interconnecting hoses and cables. Figure 1 is a diagram of the dewatering system as it is typically configured.

The NuPac Dewatering unit is designed to interface with NuPac's line of disposable containers. These containers will be furnished with factory installed internals functionally identical to those used during qualification testing. The internals will be free-standing and self-supporting, without protuberances which might, (in case of polyethylene containers) damage the container.

The dewatering fillhead serves as the interface between the dewatering equipment and the disposable container. The lower portion of the fillhead has a set of doors which allow easy access for connecting to, and disconnecting from the container internals, The fillhead seals to the upper portion of the neck of the container and is held in place by gravity.

The upper portion of the dewatering fillhead is divided into a piping section and an enclosed electronics section. The piping section is the connection point for all hoses to and from the fillhead and includes a manual isolation valve for the waste line. This valve prevents any material remaining in the waste hose from spilling during movement of the fillhead to and from the container.

The electronics section is enclosed and waterproof. It houses the fillhead instrumentation and the CCTV Camera and light. It also serves to interface the control system and the container.

The piping skid houses the water separator, the dewater pump, the valve manifold and the relative humidity instrument. It is the interface between the dewatering fillhead, the blower skid, the water chiller and the plant. The relative humidity instrument is of the optical chilled mirror type and is used to directly measure the dew point and temperature of the air stream. The relative humidity monitor is located near the control panel.

The blower skid supplies the correct temperature and quantity of air to facilitate drying of the resin, and is operated after the bulk of the water has been removed. It is equipped with temperature instrumentation, interlocked such that it will shut down automatically on high temperature. Air is continuously circulated in a loop from the blower to the container and back to the blower again through the water separator. During this process, air is bled off the discharge of the blower as required to maintain a slightly less than atmospheric pressure on the container. The air passes through a HEPA filter prior to entering the plant ventilation system.

The water chiller is a weather proof, free-standing unit, used to cool the air as it passes through the water separator enroute to the blower. This prevents over heating of the blower as well as serving to condense the water vapor in the air stream, aiding the resin drying process.

The control system consists of a control panel which contains all the necessary controls and interlocks for safe and efficient operation of the system plus a CCTV system used to monitor container operations and a radiation monitor with a detector probe mounted on the waste inlet line.

Operation

The radioactive wastes that are dewatered and packaged in a HIC for disposal are normally, but not limited to, wastes from the condensate phase separators, reactor water cleanup phase separators, waste sludge tank, spent resin tank, or concentrated waste tank. Wastes from any of the above mentionded systems are piped to a waste holding tank which is piped directly to the vendor's equipment.

The HIC is filled from the plants' transfer system until the solids level in the container reaches the maximum level. A combination of level detection instrumentation and a remote TV camera installed in the fillhead give the operator indication of container levels. An automatic isolation valve will close on a HiHi level alarm to prevent overfilling the container.

After the liner is filled the pumpable water is removed using the dewatering pump. Specific procedures for processing bead or powdered resin provide operating parameters for the pumpdown cycle.

When all of the pumpable water is removed as indicated by pump suction pressure, the blower and chiller are started to begin the drying cycle. The blower adds warm dry air to the resin bed and this air stream picks up moisture during transit through the resin bed. The warm moist air then is directed to the entrainment separator tank where refrigeration coils cause the moisture to condense. This condensate is removed by the dewatering pump.

The air entering the entrainment separator tank is periodically monitored for % relative humidity. After the dewatering pump has completed its required pumping time and the % relative humidity is below the predetermined endpoint the liner is considered to be dewatered.

Prior to shipment of processed containers the radwaste group will perform an independent verification that the container is dewatered by pulling a vacuum on a tube installed on the bottom of the HIC.

Essential Waste Characteristics and Verification

The requisite characteristics of the radioactive waste addressed by this Process Control Program are stated in 10 CFR Part 61.56

The wastes subject to the process control plan are from sources within the DAEC that are well characterized and generally recognized as meeting the essential qualities of Part 61.56 (a), other than (a)(3). By knowing the source and kind of each of the subject wastes, IELP is able to ensure that the qualities of the wastes continue to meet the requirements of Part 61.56 (a), other than (a)(3), and are compatible with the HIC itself. In addition, the DAEC's chemical control program helps prevent listed substances from being admitted into the waste streams that are deposited into the HIC.

Nuclear Packaging's Process Control Procedures are used during the initial waste stream characterization to verify that DAEC waste is similar to that waste used during the system qualification and testing program. After each waste is characterized the NuPac Process Engineer will determine the minimum pumping time for each waste stream and provide the endpoint determination curves for the relative humidity calculation. If any waste stream changes occur which will cause the characterization to be invalid (i.e. change of resin manufacturer or oil intrusion) the waste stream must be analyzed and the characterization performed again.

10 CFR Part 61.56 (b) includes provisions for stability of radioactive waste after its disposal. For wastes covered by this PCP, Iowa Electric intends to provide the stability by placing the waste in a high integrity container that will be stable after disposal as authorized in Part 61.56 (b)(1).

Both 10 CFR Parts 61.56 (a)(3) and 61.56 (b)(2) require as little free-standing and noncorrosive liquid as is reasonably achievable and no more than 1% of the volume of the waste when the waste is in a disposal container designed to ensure stability. Iowa Electric intends to accomplish this by dewatering as described herein and to perform surveillance to assure that it has been done. For a given type of waste, the operating procedure requires the dewatering system be operated for stated time interval(s). Dewatering is considered complete when the relative humidity of the air stream leaving the liner is below a predetermined valve and the required drying time is completed. The conditions stated in the procedure have been demonstrated by the Nuclear Packaging Qualification Testing of the dewatering service to achieve less than 1% free-standing water in the waste.

High Integrity Container

Wastes covered by this PCP will be packaged in Nuclear Packaging HICs. The containers have been certified by the South Carolina Bureau of Radiological Health for the intended use. C of C number DHEC-PL-012.

Each container will be visually inspected before use for acceptable condition of:

1. Sealing components,
2. Exterior surface,
3. Internal filter assemblies,
4. Lifting equipment.

After filling and dewatering has been completed, the fill port opening in the container is closed in accordance with written procedures. The procedure requires verification that the closure gasket is in place and that the threaded fill port lid is tightened to a specified torque value.

Quality Assurance

Control of the dewatering and packaging processes is maintained by conducting these operations according to written procedures addressing HIC inspection prior to filling, the dewatering process, HIC closure, and cask loading. The vendor verifies and documents that key steps have been performed.

Iowa Electric maintains assurance that dewatering and packaging is performed as intended by separately verifying and documenting that the key steps were performed.

Iowa Electric's quality assurance program is subject to 10 CFR Part 50, Apendix B, as applied to dewatering and packaging of radioactive waste.

Administration

The Radiation Protection Department maintains or requires the vendor to maintain procedures which will ensure that all applicable requirements are met prior to shipment of radioactive wastes. Iowa Electric Light and Power will review applicable vendor's operating procedures before authorizing the vendor to dewater radioactive waste. Site specific procedures developed by the vendor for the DAEC will be reviewed by the Operations Committee. Processing procedures internal to the vendor will be reviewed and approved by the vendor. The Radwaste Group of the Radiation Protection Department is responsible for ensuring compliance with the PRCP, for Vendor oversight and record keeping.

At least every 24 months, Iowa Electric Light and Power will audit the radwaste Process Control Program and operating procedures that implement it (in accordance with Technical Specification 6.5.2.8.j.). Any change to the Process Control Program will be made in accordance with Technical Specification 6.15, approved by the Plant Superintendent - Nuclear, reviewed by the Operations Committee, and submitted to the NRC in the next Semi-Annual Radioactive Material Release Report after the change is made.

Training

Before the vendor employee performs a dewatering or packaging procedure that is subject to this PCP, they must have received relevant training, and Iowa Electric must have received documented information of their training along with a statement of their qualifications.

References

1. DAEC Radwaste Handling Procedures

2. Proprietary Topical Report No. TP-02-P-A, Rev.1, covering Nuclear Packaging, Inc. Dewatering System

FIGURE I

NUPAC DEWATERING SYSTEM

TYPICAL CONFIGURATION

PAGE 1 OF 3

FIGURE 1

NUPAC DEWATERING SYSTEM

TYPICAL CONFIGURATION

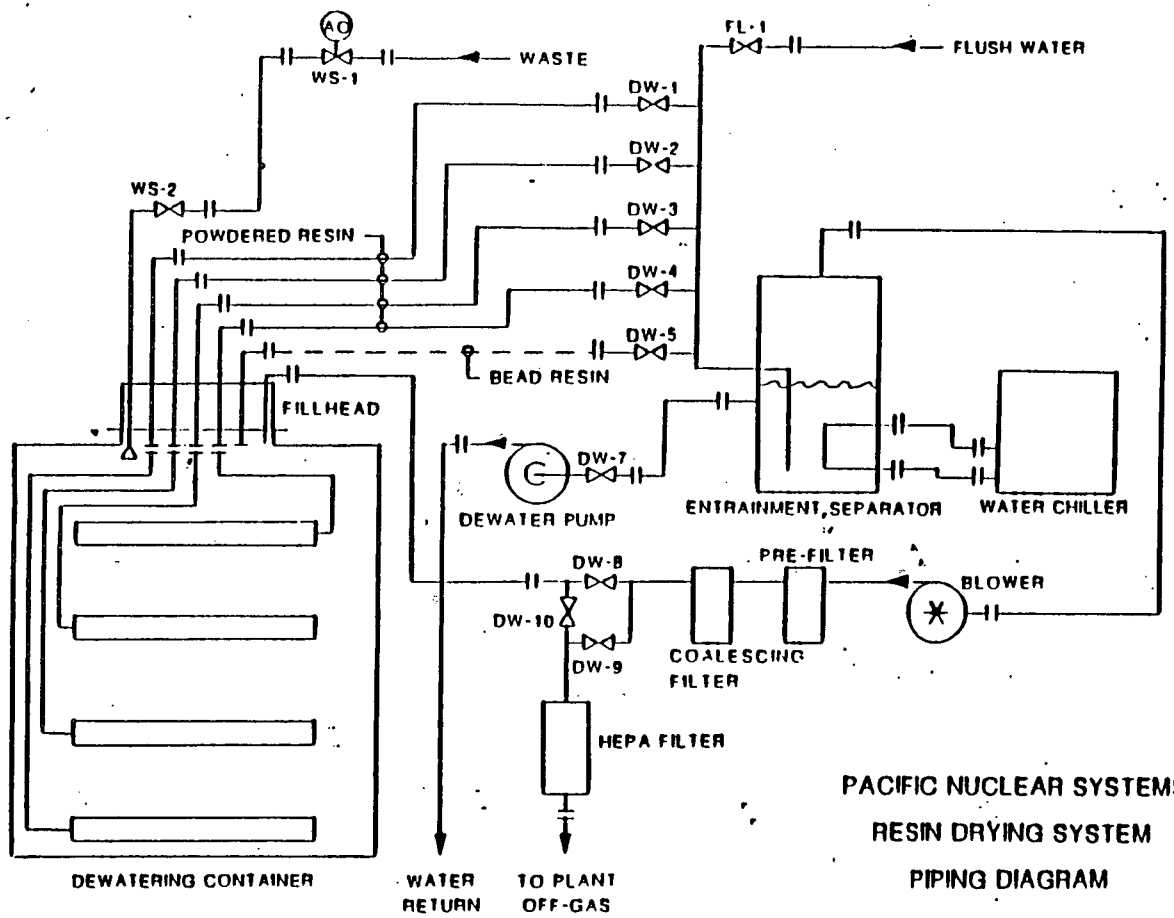

PACIFIC NUCLEAR SYSTEMS

RESIN DRYING SYSTEM

PIPING DIAGRAM

NUPAC DEWATERING SYSTEM
TYPICAL CONFIGURATION

FIGURE 1
NUPAC DEWATERING SYSTEM
TYPICAL CONFIGURATION

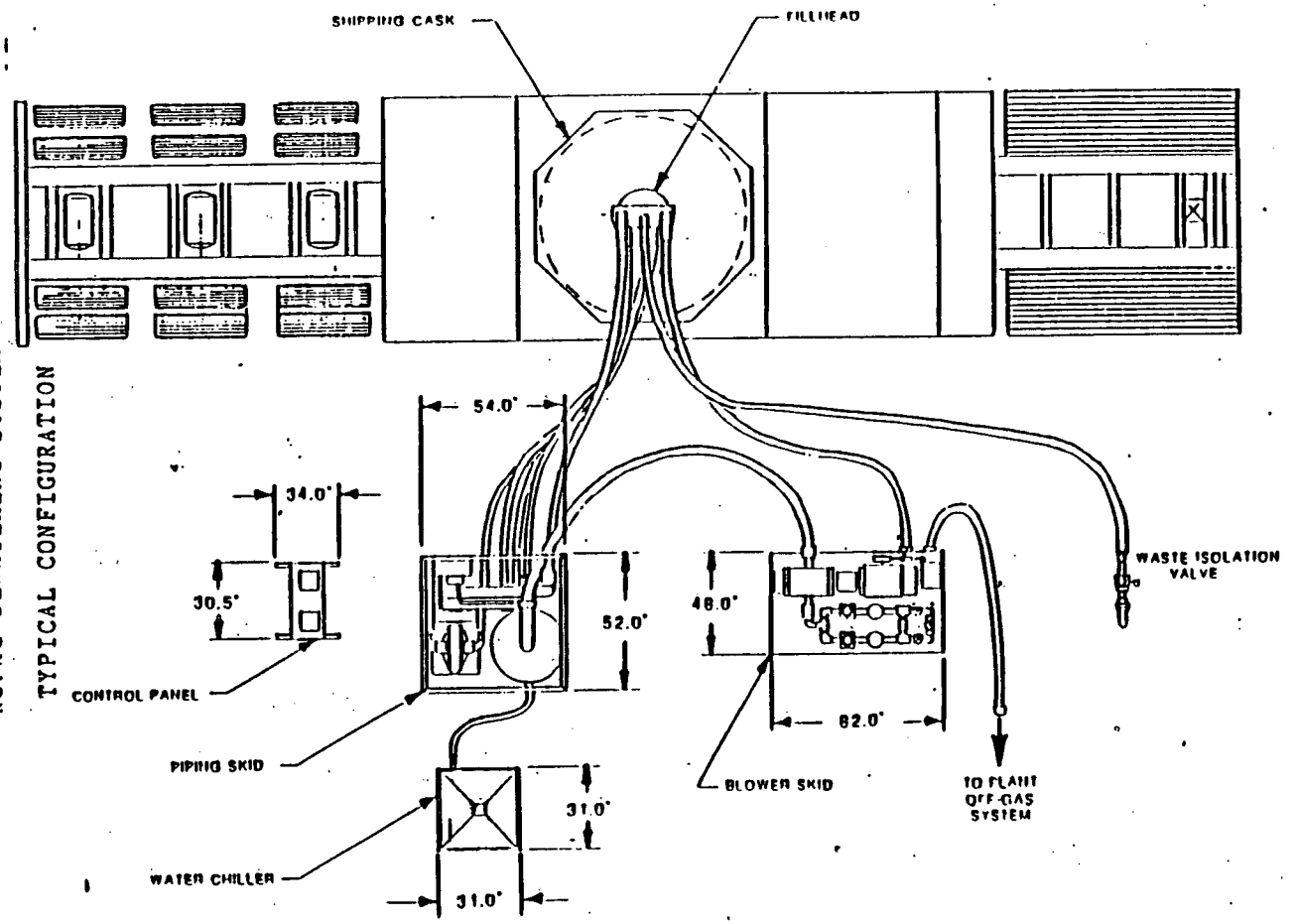

NUPAC DEWATERING SYSTEM

TYPICAL CONFIGURATION

FIGURE 1 PAGE 3 OF 3

NUPAC DEWATERING SYSTEM

TYPICAL CONFIGURATION

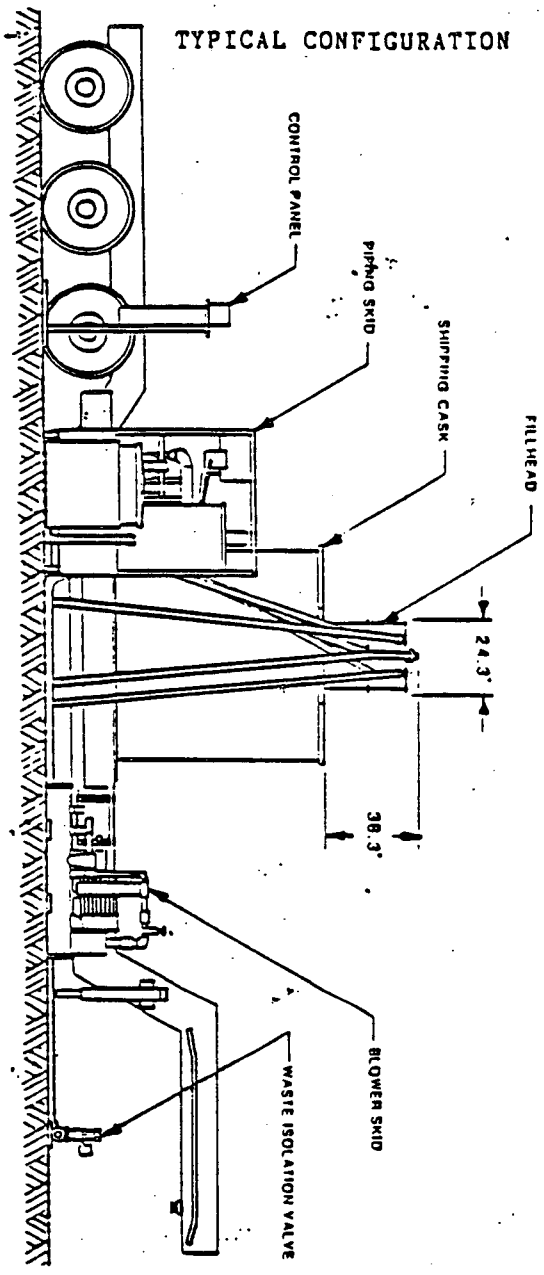

NRC APPROVAL AND SAFETY EVALUATION
FOR NUPAC DEWATERING SYSTEM

NRC APPROVAL AND SAFETY EVALUATION
FOR NUPAC DEWATERING SYSTEM

UNITED STATES
NUCLEAR REGULATORY COMMISSION
WASHINGTON, D. C. 20555

September 6, 1985

Mr. Richard T. Haelsig, President
Nuclear Packaging, Inc.
1010 South 336th Street
Federal Way, Washington 98003

RECEIVED
SEP 16 1985

Dear Mr. Haelsig:

SUBJECT: ACCEPTANCE FOR REFERENCING OF LICENSING TOPICAL REPORT TP-02-P REVISION 1, "NUCLEAR PACKAGING, INC. DEWATERING SYSTEM"

We have completed our review of the subject topical report submitted by Nuclear Packaging, Inc. by letter dated August 6, 1984. We find the report to be acceptable for referencing in light water reactor license applications to the extent specified and under the limitations delineated in the report and the associated NRC evaluation, which is enclosed. The evaluation defines the basis for acceptance of the report. We will require that applicants or licensees who reference this topical report develop their own program for classifying waste in accordance with 10 CFR Part 61, Section 61.55.

We do not intend to repeat our review of the matters described in the report and found acceptable when the report appears as a reference in license applications, except to assure that the material presented is applicable to the specific plant involved. Our acceptance applies only to the matters described in the report.

In accordance with procedures established in NUREG-0390, it is requested that Nuclear Packaging, Inc. publish accepted versions of this report, proprietary and non-proprietary, within three months of receipt of this letter. The accepted versions shall incorporate this letter and the enclosed evaluation between the title page and the abstract. The accepted versions shall include an -A (designating accepted) following the report identification symbol.

Should our criteria or regulations change such that our conclusions as to the acceptability of the report are invalidated, Nuclear Packaging, Inc. and/or the applicants referencing the topical report will be expected to revise and resubmit their respective documentation, or submit justification for the continued effective applicability of the topical report without revision of their respective documentation.

Sincerely,

Cecil O. Thomas

Cecil O. Thomas, Chief
Standardization and Special
Projects Branch
Division of Licensing

NRC APPROVAL AND SAFETY EVALUATION FOR NUPAC DEWATERING SYSTEM

ENCLOSURE

SAFETY EVALUATION REPORT

Report Number:	TP-02-P, Rev. 1
Report Title:	Nuclear Packaging Dewatering System
Originating Organization:	Nuclear Packaging, Inc., Federal Way, WA
Reviewed by:	Meteorology and Effluent Treatment Branch, OSI, NRR

1.0 INTRODUCTION

The Nuclear Packaging Dewatering System (the NUPAC System) utilizes dewatering equipment and disposable waste containers to dewater radioactive spent bead and powdered resins, and filter precoats. The dewatering process uses an air-driven positive displacement pump to obtain a continuous suction on a waste container to remove the bulk of free water. Then, the air blower recirculates air through the waste container and water separator to facilitate drying of the resin. These processes remove pumpable liquid from the waste container to a predetermined end point in accordance with the NUPAC process control program to meet the free standing liquid criteria set forth in Section 61, 56(a)(3) of 10 CFR Part 61. Vacuum gauges are provided at each waste outlet connection and manifold. The water removed from a waste container is returned to the user's liquid radwaste system.

The review of the NUPAC System, which was conducted in accordance with Section 11.4 of the Standard Review Plan (SRP), included the waste container internal design drawings, descriptive information on the dewatering operation,

NRC APPROVAL AND SAFETY EVALUATION
FOR NUPAC DEWATERING SYSTEM

equipment description, process control program, and quality assurance program. The dewatering process treats "wet" radioactive waste to meet requirements in NRC Branch Technical Position, ETSB 11-3, Revision 2 in SRP Section 11.4. The process is not intended to meet the waste stability form or classification requirements in 10 CFR Part 61.

Nuclear Packaging submitted separate topical reports on High Integrity Containers for NRC review and approval. In these reviews by the NMSS staff, the structural integrity of the NUPAC containers is being evaluated to ensure long-term isolation of low-level radioactive waste from the soil environment.

2.0 EVALUATION

The design and operation of the NUPAC System are described in detail in the NUPAC Topical Report, TP-02-P, Rev. 0 and Rev. 1 dated August 6, 1984 and June 28, 1985 respectively. In the staff's evaluation of the NUPAC System, the staff considered:

(1) The process control program to assure complete dewatering of "wet" solid radwaste.

(2) Design provisions incorporated in the equipment and system design to reduce leakage and control and monitor releases of radioactive effluents to the environment.

NRC APPROVAL AND SAFETY EVALUATION
FOR NUPAC DEWATERING SYSTEM

(3) The quality assurance program for the design, fabrication and testing of the system.

(4) Typical interfaces with the reactor plant.

(5) Waste container internal design.

(6) Provisions to control potential exothermic reaction in dewatering ion exchange resin.

(7) Radiation protection design features.

The NUPAC System consists of a dewatering waste container, a dewatering pump, an off-gas vent unit, a container level indicator, a waste fill head, a water separator with water chiller unit, an air blower, a relative humidity instrument, a control panel, and interconnecting piping and valves.

After "wet" radwaste from the user's plant is charged into a NUPAC waste container, dewatering is achieved with continuous suction on a waste container provided by the dewatering pump. The residual free water in the waste container is removed by recirculation of drying air provided by the air blower. Various types and numbers of filters are used within the waste container in different configurations to retain spent resin and filter precoat materials. Water removed from the waste container is returned to the user's liquid radwaste system.

The dewatering pump is operated for given time intervals in accordance with the NUPAC process control program. The pumping time may range from eight to

ATTACHMENT "A" PAGE 5 of 9

NRC APPROVAL AND SAFETY EVALUATION
FOR NUPAC DEWATERING SYSTEM

sixteen hours depending upon type of wastes and waste containers. After most of the free water in the waste container has been removed, drying air is continuously recirculated in a loop from the air blower to the waste container through the water separator to remove any residual free water in the waste container. The NUPAC System is provided with temperature instrumentation which is interlocked to automatically shut down the dewatering process on high air temperature due to potential exothermic reaction in dewatering ion exchange resin.

The waste container is considered dewatered when the volume of collectable liquid and relative humidity in the recirculating drying air meet the acceptance criteria specified in the NUPAC process control program. A relative humidity instrument and monitor are provided to remotely and continuously monitor the waste container outlet air. This instrument is used to establish positive end point to the dewatering process.

The topical report describes NUPAC generic Process Control Programs (PCPs) for dewatering spent bead resin and filter precoats for dewatering to ensure that the dewatered waste containers meet the free standing liquid criteria set forth in Section 61.55(a)(3) of 10 CFR Part 61. The PCPs are developed based on the actual test results on drainable liquid obtained from dewatering waste containers and from the subsequent road tests on dewatered waste containers.

NRC APPROVAL AND SAFETY EVALUATION

FOR NUPAC DEWATERING SYSTEM

- 5 -

The staff reviewed the NUPAC dewatering test procedures and its results, detailed dewatering operating and maintenance procedures, and acceptance criteria described in the topical report. The staff finds the NUPAC acceptance criteria and dewatering test results meet the free standing liquid criteria in 10 CFR Part 61 and NRC Branch Technical Position ETSB 11-3, Rev. 2 and therefore, the staff finds the NUPAC PCPs to be acceptable.

No airborne or liquid radwastes are released to the environment from the NUPAC dewatering operation. The dewatered liquid radwastes are routed to the user's liquid radwaste system and resin drying air is vented to the user's off-gas system. The NUPAC System is designed to prevent uncontrolled releases of radioactive materials by monitoring liquid levels in the waste container by a level indicator. During the waste filling operation, the operator is required to be stationed near the control panel and visually monitor the waste transfer process observing the video monitor and the radiation monitor provided. Curbs or other means to contain inadvertent spills and overflows will be provided by the user with floor drains routed to the user's liquid radwaste collection systems.

The consequences of a waste dewatering container failure releasing radioactive materials to a potable water supply is site dependent and will be evaluated for individual license applications. The staff finds the NUPAC dewatering process and waste container design meet the requirement of Section 20.106 of 10 CFR Part 20, Section 50.34a of 10 CFR Part 50, and General Design Criteria 60 and 64 of Appendix A to 10 CFR Part 50.

ATTACHMENT "A"
PAGE 7 of 9

NRC APPROVAL AND SAFETY EVALUATION

FOR NUPAC DEWATERING SYSTEM

- 6 -

The design, procurement, fabrication, testing and operation of the NUPAC System is accomplished under prescribed quality assurance requirements which conform, to the extent practicable, with the guidelines provided in Regulatory Guide 1.143 "Design Guidance for Radioactive Waste Management Systems, Structures and Components Installed in Light-Water-Cooled Nuclear Power Plants." The quality assurance program defines and controls those elements of NUPAC and their suppliers' performance which affect the quality of the NUPAC System.

The design and arrangement of the NUPAC System components are based on maintaining the operator radiation exposure as low as is reasonably achievable. The topical report provides a list of specific design and operating features which were incorporated to minimize personnel radiation exposure. All active components are located so they can be easily accessed for maintenance. All pumps, valves and piping can be flushed prior to inspection and maintenance.

The staff also finds that NUPAC has adequately identified interface information and requirements which users should provide.

Upon completion of the staff review by NRSS of the NUPAC topical reports on High Integrity Containers, a separate Safety Evaluation Report will be provided to supplement this evaluation.

ATTACHMENT "A"

NRC APPROVAL AND SAFETY EVALUATION

FOR NUPAC DEWATERING SYSTEM

- 7 -

3.0 CONCLUSION

Based on the foregoing evaluation, the staff finds the NUPAC Topical Report, TP-02-P, Rev. 1, to be acceptable.

The bases for our acceptance is our conclusion that the NUPAC Dewatering System is designed and can be operated in accordance with current guidance of applicable regulatory guides, standard review plans, branch technical positions, and Federal regulations.

The capability of the plant radioactive waste treatment systems to meet the requirements of Appendix I to 10 CFR Part 50 with the NUPAC System in operation is site dependent and will be evaluated for individual license applications. In addition, the packaging and shipping of all processed wastes including waste classification in accordance with the applicable sections of 10 CFR Parts 61 and 71, and 49 CFR Parts 170-178, will be determined for individual license applications. The consequences of a potential waste container failure releasing radioactive materials to a potable water supply is also site dependent and will be evaluated for individual license applications.

The staff concludes that the NUPAC Topical Report is acceptable for reference in future license applications for light water reactors. Any application incorporating this report by reference should include the following information:

ATTACHMENT "A"

NRC APPROVAL AND SAFETY EVALUATION

FOR NUPAC DEWATERING SYSTEM

- 8 -

(1) Any exceptions or deviations from the NUPAC Topical Report, Rev. 1, dated June 1985.

(2) Interfaces between the plant and the NUPAC System.

(3) Location and arrangement drawings of the NUPAC System in the plant including curbs or other means to contain inadvertent spills and overflows.

(4) The waste classification program to demonstrate that the solid waste product is classified in accordance with 10 CFR Part 61, Section 61.55 and NRC Branch Technical Position on Waste Classification.

(5) Description of the solid waste product container to be used.

(6) The capability of the plant radioactive waste treatment system to meet the requirements of Appendix I to CFR Part 50 with the NUPAC System in operation.

(7) The plant site information on potable water supply.