480VOLT MCC 1B34A TIE BREAKER 52-3401 CONTROL

(TYPICAL FOR MCC 1B44A TIE BREAKER 52-4401 CONTROL)

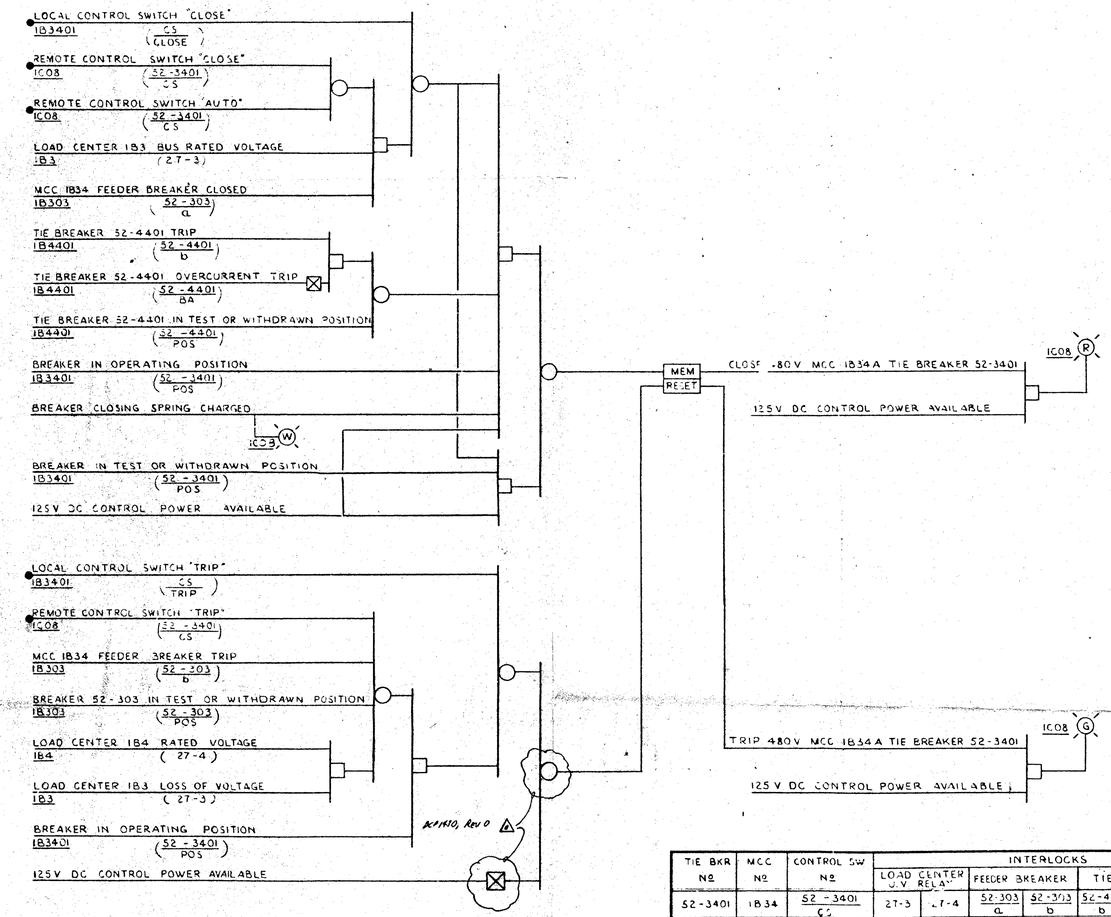

TIE BKR Nº	MCC Nº	CONTROL SW Nº	INTERLOCKS							ANNUNCIATOR WINDOW Nº
			LOAD CENTER U.V. RELAY		FEEDER BREAKER		TIE BREAKER		POS. SWITCH	
52-3401	1B34	52-3401 / CS	27-3	27-4	52-303 / a	52-303 / b	52-4401 / b	52-4401 / BA	52-3401 / POS	1C08-A #41
52-4401	1B44	52-4401 / CS	27-4	27-3	52-403 / a	52-403 / b	52-3401 / b	52-3401 / BA	52-4401 / POS	1C08-A #41

FOR DCP 143D USE ONLY

REV	PREPARED BY	VERIFIED BY
0	[illegible] 9/28/89	[illegible] 9/28/89
1		

DCP 1430, REV 0

DCP PACKAGE INDEX ITEM NO. 6.5.5

STARTUP COPY

REF. ONLY

NO.	DATE	REVISIONS	BY	CHKD	OPER. DEPT.	ENGR	PROJ ENGR	APPR
0	5/30/72	ISSUED FOR CONSTRUCTION	BK			SPM		

SCALE NONE DESIGNED SPM DRAWN B. KNOTT

BECHTEL
SAN FRANCISCO

DUANE ARNOLD ENERGY CENTER—UNIT Nº 1
IOWA ELECTRIC LIGHT AND POWER CO.
CEDAR RAPIDS IOWA

FUNCTIONAL DESCRIPTION
480V SYSTEM

JOB No.	DRAWING No.	REV.
7884	E-6-F.D. SH. 3 OF 5	0

FOR INFORMATION ONLY

SI APERTURE CARD

Docket # 50-331
Control # 8810120314
Date 10/4/88 of Document
REGULATORY DOCKET FILE

8810120314

6.5.5

D-24X

#2

This drawing and the design it covers are the property of BECHTEL. They are merely loaned and on the borrower's express agreement that they will not be reproduced, copied, loaned, exhibited, or used except in the limited way and private use permitted by any written consent given by the lender to the borrower.

JORM MICROLAB