TABLE OF CONTENTS

Section	Title	Page
11.0	**RADIOACTIVE WASTE MANAGEMENT**	
11.1	**SOURCE TERMS**	**11.1-1**
11.1.1	HISTORICAL DESIGN MODEL FOR RADIOACTIVITIES IN SYSTEMS AND COMPONENTS	11.1-1
11.1.1.1	REACTOR COOLANT HISTORICAL DESIGN ACTIVITY	11.1-1
11.1.1.2	VOLUME CONTROL TANK HISTORICAL DESIGN ACTIVITY	11.1-2
11.1.1.3	PRESSURIZER HISTORICAL DESIGN ACTIVITY	11.1-2
11.1.1.4	GASEOUS WASTE PROCESSING SYSTEM HISTORICAL DESIGN ACTIVITIES	11.1-2
11.1.1.5	SECONDARY COOLANT HISTORICAL DESIGN ACTIVITIES	11.1-2
11.1.2	REALISTIC MODEL FOR RADIOACTIVITIES IN SYSTEMS AND COMPONENTS	11.1-2
11.1.3	PLANT LEAKAGE	11.1-3
11.1.4	ADDITIONAL SOURCES	11.1-3
11.2	**LIQUID WASTE SYSTEMS**	**11.2-1**
11.2.1	DESIGN OBJECTIVES	11.2-1
11.2.2	SYSTEMS DESCRIPTIONS	11.2-1
11.2.3	SYSTEM DESIGN	11.2-4
11.2.3.1	COMPONENT DESIGN	11.2-4
11.2.3.2	INSTRUMENTATION DESIGN	11.2-9
11.2.4	OPERATING PROCEDURE	11.2-10
11.2.5	PERFORMANCE TESTS	11.2-16
11.2.6	ESTIMATED RELEASES	11.2-17
11.2.6.1	NRC REQUIREMENTS	11.2-17
11.2.6.2	WESTINGHOUSE PWR RELEASE EXPERIENCE	11.2-17
11.2.6.3	EXPECTED LIQUID WASTE PROCESSING SYSTEM RELEASES	11.2-17
11.2.6.4	TURBINE BUILDING (TB) DRAINS	11.2-17
11.2.6.5	ESTIMATED TOTAL LIQUID RELEASES	11.2-18
11.2.7	RELEASE POINTS	11.2-19
11.2.8	DILUTION FACTORS	11.2-20
11.2.9	ESTIMATED DOSES FROM RADIONUCLIDES IN LIQUID EFFLUENTS	11.2-20
11.2.9.1	ASSUMPTIONS AND CALCULATIONAL METHODS	11.2-20

TABLE OF CONTENTS

Section	Title	Page
11.2.9.2	SUMMARY OF DOSE FROM RADIONUCLIDES IN LIQUID EFFLUENTS	11.2-22
11.3	**GASEOUS WASTE SYSTEMS**	**11.3-1**
11.3.1	DESIGN BASES	11.3-1
11.3.2	SYSTEM DESCRIPTIONS	11.3-1
11.3.3	SYSTEM DESIGN	11.3-3
11.3.3.1	COMPONENT DESIGN	11.3-3
11.3.3.2	INSTRUMENTATION DESIGN	11.3-3
11.3.4	OPERATING PROCEDURE	11.3-4
11.3.5	PERFORMANCE TESTS	11.3-6
11.3.6	DELETED BY AMENDMENT 77	11.3-6
11.3.7	RADIOACTIVE RELEASES	11.3-6
11.3.7.1	NRC REQUIREMENTS	11.3-6
11.3.7.2	WESTINGHOUSE PWR EXPERIENCE RELEASES	11.3-6
11.3.7.3	EXPECTED GASEOUS WASTE PROCESSING SYSTEM RELEASES	11.3-7
11.3.7.4	RELEASES FROM VENTILATION SYSTEMS	11.3-7
11.3.7.5	ESTIMATED TOTAL RELEASES	11.3-7
11.3.8	RELEASE POINTS	11.3-7
11.3.9	ATMOSPHERIC DILUTION	11.3-9
11.3.10	ESTIMATED DOSES FROM RADIONUCLIDES IN GASEOUS EFFLUENTS	11.3-9
11.3.10.1	ASSUMPTIONS AND CALCULATIONAL METHODS	11.3-9
11.3.10.2	SUMMARY OF ANNUAL POPULATION DOSES	11.3-12
11.4	**PROCESS AND EFFLUENT RADIOLOGICAL MONITORING AND SAMPLING SYSTEM**	**11.4-1**
11.4.1	DESIGN OBJECTIVES	11.4-1
11.4.2	CONTINUOUS MONITORS	11.4-2
11.4.2.1	LIQUID MONITORS	11.4-2
11.4.2.2	GASEOUS MONITORS	11.4-4
11.4.3	SAMPLING	11.4-8
11.4.4	CALIBRATION AND MAINTENANCE	11.4-9
11.5	**SOLID WASTE MANAGEMENT SYSTEM**	**11.5-1**

TABLE OF CONTENTS

Section	Title	Page
11.5.1	DESIGN OBJECTIVES	11.5-1
11.5.2	SYSTEM INPUTS	11.5-1
11.5.3	SYSTEMS DESCRIPTION	11.5-1
11.5.3.1	WET ACTIVE WASTE HANDLING	11.5-1
11.5.3.2	DRY ACTIVE WASTE HANDLING	11.5-3
11.5.3.3	MISCELLANEOUS WASTE HANDLING	11.5-4
11.5.4	EQUIPMENT OPERATION	11.5-4
11.5.4.1	MOBILE SOLIDIFICATION SYSTEM (MSS)	11.5-4
11.5.5	STORAGE FACILITIES	11.5-4
11.5.5.1	INPLANT STORAGE AREA	11.5-4
11.5.5.2	OUTSIDE RADWASTE STORAGE	11.5-4
11.5.6	SHIPMENT	11.5-5
11.6	**OFFSITE RADIOLOGICAL MONITORING PROGRAM**	**11.6-1**
11.6.1	EXPECTED BACKGROUND	11.6-2
11.6.2	CRITICAL PATHWAYS TO MAN	11.6-2
11.6.2.1	DOSES FROM GASEOUS EFFLUENTS	11.6-3
11.6.2.2	INTERNAL DOSES FROM LIQUID EFFLUENTS	11.6-3
11.6.3	SAMPLING MEDIA, LOCATIONS, AND FREQUENCY	11.6-4
11.6.4	ANALYTICAL SENSITIVITY	11.6-4
11.6.5	DATA ANALYSIS AND PRESENTATION	11.6-4
11.6.6	PROGRAM STATISTICAL SENSITIVITY	11.6-4
11A	**TRITIUM CONTROL**	
11A	**SYSTEM SOURCES**	**11A-1**
11A.1	THE FISSION SOURCE	11A-1
11A.2	CONTROL ROD SOURCE	11A-1
11A.3	BORIC ACID SOURCE	11A-1
11A.4	BURNABLE SHIM ROD SOURCE	11A-2
11A.2	**TRITIUM RELEASES**	**11A-2**
11A.3	**DESIGN BASES**	**11A-2**
11A.4	**DESIGN EVALUATION**	**11A-2**

TABLE OF CONTENTS

Section	Title	Page
11A.5	TRITIUM LEAD TEST ASSEMBLY	11A-3
11A.6	TRITIUM PRODUCING BURNABLE ABSORBER ROD (TPBAR) SOURCE (UNIT 1 ONLY)	11A-3

LIST OF TABLES

Section	Title
TABLE 11.1-1	PARAMETERS USED IN THE CALCULATION OF REACTOR COOLANT FISSION AND CORROSION PRODUCT HISTORICAL DESIGN ACTIVITIES
TABLE 11.1-2	REACTOR COOLANT EQUILIBRIUM FISSION AND CORROSION PRODUCT HISTORICAL DESIGN ACTIVITIES
TABLE 11.1-3	EQUILIBRIUM VOLUME CONTROL TANK HISTORICAL DESIGN ACTIVITIES
TABLE 11.1-4	PRESSURIZER HISTORICAL DESIGN ACTIVITIES
TABLE 11.1-5	HISTORICAL DESIGN INVENTORY IN THE GASEOUS WASTE PROCESSING SYSTEM SINGLE UNIT
TABLE 11.1-6	PARAMETERS USED TO DESCRIBE THE REACTOR COOLANT SYSTEM REALISTIC BASIS
TABLE 11.1-7	SPECIFIC ACTIVITIES IN PRINCIPAL FLUID STREAMS REALISTIC BASIS (MCI/GM)
TABLE 11.2-1	LIQUID WASTE PROCESSING SYSTEM CALCULATION BASIS
TABLE 11.2-2	COMPONENT DESIGN PARAMETERS*
TABLE 11.2-3	RADIOACTIVE LIQUID RELEASES FROM WESTINGHOUSE DESIGNED PWR PLANTS HISTORICAL INFORMATION
TABLE 11.2-4	TOTAL ANNUAL DISCHARGE LIQUID WASTE PROCESSING SYSTEM* PRIOR TO TREATMENT
TABLE 11.2-5	TOTAL ANNUAL DISCHARGE LIQUID WASTE PROCESSING SYSTEM* ANNUAL DISCHARGE (CI) AFTER PROCESSING TOTAL RELEASES PER UNIT (TPC UNIT 1 ONLY)***
TABLE 11.2-5A	DESIGN (FOR 1% FAILED FUEL) LIQUID RELEASES CONCENTRATION/(EFFLUENT CONCENTRATION LIMIT) BASELINE DATA WITH NO PROCESSING (SHEET 1 OF 1)
TABLE 11.2-5B	DESIGN (FOR 1% FAILED FUEL) LIQUID RELEASES CONCENTRATION/(EFFLUENT CONCENTRATION LIMIT) WASTE PROCESSED BY MOBILE DEMINERALIZERS (SHEET 1 OF 1)
TABLE 11.2-5C	NO CD PROCESS/ SGBD AT LLD/ WITH 20000 GPM DILUTION OTHER RELEASE PATHS AT DESIGN LIMIT:

LIST OF TABLES

Section	Title
TABLE 11.2-5D	NO CD PROCESS/ SGBD AT MAX ALLOWABLE CONCENTRATION WITH 20000 GPM DILUTION:
TABLE 11.2-6	TENNESSEE RIVER REACHES WITHIN 50 MILE RADIUS DOWNSTREAM OF WBN
TABLE 11.2-7	WATTS BAR NUCLEAR PLANT DOSES FROM LIQUID EFFLUENTS FOR YEAR 2040
TABLE 11.3-1	GASEOUS WASTE PROCESSING SYSTEM COMPONENT DATA1
TABLE 11.3-2	HISTORICAL DATA AIRBORNE RADIOACTIVE NOBLE GAS RELEASES FOR 1973 FROM WESTINGHOUSE DESIGNED OPERATING REACTORS
TABLE 11.3-3	BASES USED IN CALCULATING EXPECTED SYSTEM ACTIVITIES AND RELEASES FROM THE GWPS
TABLE 11.3-4	PROCESS PARAMETERS AND EXPECTED ACTIVITIES IN GASEOUS WASTE SYSTEM (CONCENTRATIONS IN MCI/GM) (SHEET 1 OF 2)
TABLE 11.3-4	PROCESS PARAMETERS AND EXPECTED ACTIVITIES IN GASEOUS WASTE SYSTEM (CONCENTRATIONS IN MCI/GM) (SHEET 2 OF 2)
TABLE 11.3-5	EXPECTED ANNUAL GASEOUS RELEASES FROM THE GWPS - PER REACTOR UNIT
TABLE 11.3-6	RADIOACTIVE GASEOUS EFFLUENT PARAMETERS
TABLE 11.3-7	ANNUAL RADIOACTIVE RELEASES WITH PURGE AIR FILTERS (CURIES/YEAR/REACTOR)
TABLE 11.3-7A	DESIGN (FOR 1% FAILED FUEL) EXPECTED GAS RELEASE CONCENTRATION/(EFFLUENT CONCENTRATION LIMIT) WITH CONTAINMENT PURGE (SHEET 1 OF 2)
TABLE 11.3-7B	DESIGN (FOR 1% FAILED FUEL) EXPECTED GAS RELEASE CONCENTRATION/(EFFLUENT CONCENTRATION LIMIT) WITH CONTINUOUS FILTERED CONTAINMENT VENT (SHEET 1 OF 2)
TABLE 11.3-7C	TOTAL RELEASES (Y 1/8 FAILED FUEL IN CI/YR), WITH CONTINUOUS FILTERED CONTAINMENT VENT (SHEET 1 OF 1)
TABLE 11.3-8	DATA ON POINTS OF INTEREST NEAR WATTS BAR NUCLEAR PLANT

LIST OF TABLES

Section	Title
TABLE 11.3-9	PROJECTED 2040 POPULATION DISTRIBUTION WITHIN 50 MILES OF WATTS BAR NUCLEAR PLANT POPULATION WITHIN EACH SECTOR ELEMENT DISTANCE FROM SITE (MILES)
TABLE 11.3-10	WATTS BAR NUCLEAR PLANT- INDIVIDUAL DOSES FROM GASEOUS EFFLUENTS (FOR 1 UNIT WITHOUT TPC)
TABLE 11.3-11	SUMMARY OF POPULATION DOSES
TABLE 11.4-1	PROCESS AND EFFLUENT RADIATION MONITORS - LIQUID MEDIA
TABLE 11.4-2	PROCESS AND EFFLUENT RADIATION MONITORS
TABLE 11.4-3	LOCATIONS FOR GASEOUS PROCESS AND EFFLUENT RADIATION MONITOR INDICATORS, RECORDERS, AND ANNUNCIATORS
TABLE 11.4-4	DELETED BY AMENDMENT 49
TABLE 11.4-5	PROCESS MONITORS CHECK SOURCE DESCRIPTION
TABLE 11.5-1	MAXIMUM ANTICIPATED ANNUAL SOLID RADWASTE TO BE PROCESSED
TABLE 11.5-2	ESTIMATED MAJOR NUCLIDE COMPOSITION
TABLE 11A-1	TRITIUM SOURCES IN A TYPICAL WNES 4 LOOP REACTOR OPERATING AT A POWER LEVEL OF 3582 MW(TH) CURIES/12 FULL-POWER MONTHS AT A 0.8 LOAD FACTOR
TABLE 11A-2	TRITIUM RELEASE FOR 1972 FROM WESTINGHOUSE DESIGNED OPERATING REACTORS

LIST OF TABLES

Section **Title**

THIS PAGE INTENTIONALLY BLANK

LIST OF FIGURES

Section	Title
FIGURE 11.2-1	POWERHOUSE AUXILIARY BLDG & REACTOR BLDG UNITS 1 & 2 MECHANICAL FLOW DIAGRAM WASTE DISPOSAL SYSTEM (SHEET 1)
FIGURE 11.2-1	POWERHOUSE AUX BLDG UNITS 1 & 2 MECHANICAL FLOW DIAGRAM WASTE DISPOSAL SYSTEM (SHEET 2)
FIGURE 11.2-1	POWERHOUSE AUX BLDG UNITS 1 & 2 MECHANICAL FLOW DIAGRAM WASTE DISPOSAL SYSTEM (SHEET 3)
FIGURE 11.2-1	POWERHOUSE AUX BLDG UNITS 1 & 2 MECHANICAL FLOW DIAGRAM WASTE DISPOSAL SYSTEM (SHEET 4)
FIGURE 11.2-1	POWERHOUSE AUXILIARY & COND DEMIN WASTE EVAPORATOR BLDG UNITS 1 & 2 MECHANICAL FLOW DIAGRAM WASTE DISPOSAL SYSTEM (SHEET 6)
FIGURE 11.2-1	POWERHOUSE AUX & COND DEMINERLIZER WASTE EVAPORATOR BLDG UNITS 1 & 2 MECHANICAL FLOW DIAGRAM WASTE DISPOSAL SYSTEM (SHEET 7)
FIGURE 11.2-2	PROCESS FLOW DIAGRAM WASTE DISPOSAL SYSTEM
FIGURE 11.3-1	POWERHOUSE AUX BLDG UNITS 1 & 2 MECHANICAL FLOW DIAGRAM WASTE DISPOSAL SYSTEM (SHEET 1)
FIGURE 11.3-1	POWERHOUSE AUX BLDG UNITS 1 & 2 MECHANICAL FLOW DIAGRAM WASTE DISPOSAL SYSTEM (SHEET 2)
FIGURE 11.3-2	POWERHOUSE UNITS 1 & 2 ELECTRICAL CONTROL DIAGRAM WASTE DISPOSAL SYSTEM (SHEET 1)
FIGURE 11.3-2	POWERHOUSE UNITS 1 & 2 ELECTRICAL CONTROL DIAGRAM WASTE DISPOSAL SYSTEM (SHEET 2)
FIGURE 11.3-2	POWERHOUSE UNITS 1 & 2 ELECTRICAL CONTROL DIAGRAM SAMPLING & WATER QUALITY SYSTEM (SHEET 3)
FIGURE 11.5-1	POWERHOUSE AUX BLDG UNITS 1 & 2 MECHANICAL FLOW DIAGRAM WASTE DISPOSAL SYSTEM

LIST OF FIGURES

Section **Title**

THIS PAGE INTENTIONALLY BLANK

11.0 RADIOACTIVE WASTE MANAGEMENT

11.1 SOURCE TERMS

The fission product inventory in the reactor core and the diffusion to the fuel pellet/cladding gap are presented in Section 15.1.7.

11.1.1 Historical Design Model for Radioactivities in Systems and Components

This section and associated Tables 11.1-1 through 11.1-5 present results of the original Westinghouse Design Calculations using methodology in References [2] and [3]. The results are presented as background and are superseded by calculations described in Section 11.1.2 and Tables 11.1-6 and 11.1-7.

11.1.1.1 Reactor Coolant Historical Design Activity

The parameters used in the calculation of the reactor coolant fission product design inventories together with the pertinent information concerning the design reactor coolant cleanup flow rate and demineralizer effectiveness, are summarized in Table 11.1-1. The results of the calculations are presented in Tables 11.1-2 through 11.1-4. In these calculations the defective fuel rods are assumed to be present at the initial core loading and to be uniformly distributed throughout the core; thus, the fission product escape rate coefficient are based upon average fuel temperature.

For fuel failure and burnup experience, see Section 4.2.1.3.3.

The fission product activities in the reactor coolant during operation with small cladding defects (fuel rods containing pin-holes or fine cracks) are computed using the following differential equations:

for parent nuclides in the coolant:

$$\frac{dN_{wi}}{dt} = D\nu_i N_{c_i} - \left(\lambda_i + R\eta_i + \frac{B'}{B_o - tB'}\right) N_{wi}$$

for daughter nuclides in the coolant:

$$\frac{dN_{wj}}{dt} = D\nu_j N_{c_j} - \left(\lambda + R\eta_j + \frac{B'}{B_o - tB'}\right) N_{wj} + \lambda_i N_{wi}$$

symbols:

N = nuclide concentration

D = clad defects, as a fraction of rated core thermal power being generated by rods with clad defects

R = purification flow, coolant system volumes per sec.

B_o = initial boron concentration, ppm

B' = boron concentration reduction rate by feed and bleed, ppm per sec.

η = removal efficiency of purification cycle for nuclide

λ = radioactive decay constant

ν = escape rate coefficient for diffusion into coolant

t = elapsed time (seconds) since the beginning of cycle

subscripts:

C = refers to core

w = refers to coolant

i = refers to parent nuclide

j = refers to daughter

11.1.1.2 Volume Control Tank Historical Design Activity

Table 11.1-3 lists the activities in the volume control tank using the assumptions summarized in Table 11.1-1.

11.1.1.3 Pressurizer Historical Design Activity

The activities in the pressurizer are separated between the liquid and the steam phase and the results obtained are given in Table 11.1-4 using the assumptions summarized in Table 11.1-1.

11.1.1.4 Gaseous Waste Processing System Historical Design Activities

The activities to be found in the Gaseous Waste Processing System are given in Table 11.1-5.

11.1.1.5 Secondary Coolant Historical Design Activities

The secondary cleanup system design activities used for shielding design calculations are discussed in Subsection 12.2.1.5.

11.1.2 Realistic Model for Radioactivities in Systems and Components

This section and associated Tables 11.1-6 and 11.1-7 present results which supersede the calculations in the previous sections. The Tritium Producing Burnable Absorber Rods (TPBARs) are designed and fabricated to retain all the tritium produced within the TPBAR. Since the TPBAR produced tritium is chemically bonded within the TPBAR, virtually no tritium is available in a form that could permeate through the TPBAR cladding. However, it is assumed that while operating with a Tritium Production Core (TPC), some of the tritium inventory in the TPBARs may permeate the cladding

material and be released to the primary coolant. The design goal for this permeation process is less than 1000 Ci per 1000 TPBARs per year. Thus a single TPBAR may release more than 1 Ci/year, but the total release for 1,000 TPBARs will be less than 1000 Ci/year. As the TPC will contain up to 2,304 TPBARs at WBN (Unit 1 only), the total design basis tritium input from the maximum number of TPBARs is 2,304 Ci/year into the Reactor Coolant System.

The parameters used to describe Watts Bar are given in Table 11.1-6 together with the nominal values given in ANS-18.1-1984. In order to obtain primary coolant activities, the correction formula from ANSI/ANS-18.1-1984 [1], was applied to the activities listed in Reference [1]. Secondary side water and steam activities were similarly obtained from the values given in Reference [1].

The specific activities for primary and secondary sides are calculated by ANSI/ANS-18.1-1984 [1] methodology and given in Table 11.1-7.

11.1.3 Plant Leakage

As a necessary part of the effort to reduce effluent of radioactive liquid wastes, Westinghouse surveyed various PWR facilities which are in operation, to identify design and operating problems influencing reactor coolant and nonreactor grade leakage and hence the load on a waste processing system. Liquid leakage sources have been identified primarily in connection with pump shaft seals and valve stem leakage.

Where packed glands are provided, leakage may be anticipated, while mechanical shaft seals provide essentially zero leakage. Valve stem leakage was experienced where the originally specified packing was used. A combination of a graphite filament yarn packing sandwiched with asbestos sheet packing is used with improved results in several plants. For Watts Bar the majority of the valves used are diaphragm valves. This type of valve provides positive control stem leakage and is suitable for use as an isolation valve as well as a throttling valve.

Expected leakage rates of liquids to be treated in the liquid waste processing system are summarized in Table 11.2-1.

Total plant liquid and gaseous releases are discussed in Subsections 11.2.6 and 11.3.7, respectively.

11.1.4 Additional Sources

During normal operation, the sources of radioactive material not normally considered part of the radioactive waste system are as follows:

(1) Containment Purging System

(2) Turbine Gland Sealing System

(3) Main Condenser Evacuation System

(4) Auxiliary Building Ventilation System

(5) Turbine Building Ventilation System

(6) Steam Generator Blowdown System

Estimates for the release of radioactive materials from sources: 1 through 5 (above) are presented in Section 11.3.7. The release paths and transport mechanism for these sources of radioactive material are also presented in Section 11.3.8.

The Steam Generator Blowdown System (SGBS) is another source of liquid radioactive material that is not normally considered part of the radioactive waste system. The system description, release paths, and flow rates are presented in Section 11.2 and in Section 10.4.8. The release path that is of concern in evaluating the radiological consequences of liquid releases from steam generator blowdowns is the path to the river via the cooling tower blowdown line. This route is used primarily during startups, when non-radioactive impurity levels are higher than normal and when SGBS is bypassing the condensate demineralizers. The normal route for the blowdown liquid is to the Turbine Building, where it is cooled, and then routed to either the condensate system upstream of the condensate demineralizers or cooling tower blowdown lines or condenser hotwell. The discharge to the river is monitored for radioactivity as specified in Section 11.4. An alarm in the Main Control Room alerts the operator of an increasing radioactivity level in the discharge. If the radiation setpoint is exceeded, the blowdown discharge is automatically diverted to the condensate demineralizers. The basis for the setpoint is presented in Section 11.4.

References

(1) ANSI/ANS-18.1-1984, "Radioactive Source Term For Normal Operation of Light Water Reactors," December 31, 1984.

(2) WCAP-8253, "Source Term Data for Westinghouse Pressurized Water Reactors", Westinghouse Electric Corporation, Pittsburgh, Pa. 15230, April 1974.

(3) WCAP-7664, R1 "Radiation Analysis Design Manual - 4-Loop Plant", October 1972.

Table 11.1-1 Parameters Used In The Calculation of Reactor Coolant Fission and Corrosion Product Historical Design Activities
(Page 1 of 2)

1. Core thermal power, MWt	3565
2. Clad defects, as a percent of rated core thermal power being generated by rods with clad defects	1.0
3. Reactor coolant liquid volume, ft^3	11,781
4. Reactor coolant full power average temperature, °F	588
5. Purification flow rate (normal) gpm	75
6. Effective cation demineralizer flow, gpm	7.5
7. Volume control tank volumes	
a.Vapor, ft^3	240
b.Liquid, ft^3	160
8. Fission product escape rate coefficients:*	
a.Noble gas isotopes, sec^{-1}	6.5×10^{-8}
b.Br, I and Cs isotopes, sec^{-1}	1.3×10^{-8}
c.Te isotopes, sec^{-1}	1.0×10^{-9}
d.Mo isotopes, sec^{-1}	2.0×10^{-9}
e.Sr and Ba isotopes, sec^{-1}	1.0×10^{-11}
f.Y, La, Ce, Pr isotopes, sec^{-1}	1.6×10^{-12}
9. Mixed bed demineralizer decontamination factors:	
a.Noble gases and Cs-134, 136, 137 Y-90, 91 and Mo-99	1.0
b.All other isotopes including corrosion products	10.0
10. Cation bed demineralized decontamination factor for Cs-134, 136, 137, Y-90, 91, Mo-99	10.0

* Escape rate coefficients are based on fuel defect tests performed at the Saxton Reactor. Experience at two plants operating with fuel rod defects has verified the listed escape rate coefficients.

Table 11.1-1 Parameters Used In The Calculation of Reactor Coolant Fission and Corrosion Product Historical Design Activities
(Page 2 of 2)

11. Volume control tank noble gas stripping fractions

Isotope	Stripping Fraction
Kr-85	2.3×10^{-5}
Kr-85m	2.7×10^{-1}
Kr-87	6.0×10^{-1}
Kr-88	4.3×10^{-1}
Xe-131m	7.1×10^{-3}
Xe-133	1.6×10^{-2}
Xe-133m	3.7×10^{-2}
Xe-135	1.8×10^{-1}
Xe-135m	8.0×10^{-1}
Xe-138	1.0

12. Boron concentration and reduction rates	
a. B_o (initial cycle)	860
B' (initial cycle)	3.0 ppm/day
b. B_o (equilibrium cycle)	1200 ppm
B' (equilibrium cycle)	4.0 ppm/day
13. Pressurizer volumes	
a. Vapor	720 ft^3
b. Liquid	1080 ft^3
14. Spray line flow	1.0 gpm
15. Pressurizer stripping fractions	
a. Noble gases	1.0
b. All other elements	0

Table 11.1-2 Reactor Coolant Equilibrium Fission And Corrosion Product Historical Design Activities

Isotope	Activity µCi/gm
Br-84	4.2×10^{-2}
Rb-88	3.7
Rb-89	1.0×10^{-1}
Sr-89	3.8×10^{-3}
Sr-90	1.1×10^{-4}
Sr-91	1.9×10^{-3}
Y-90	1.3×10^{-4}
Y-91	5.5×10^{-3}
Y-92	7.3×10^{-4}
Zr-95	6.7×10^{-4}
Nb-95	6.4×10^{-4}
Mo-99	5.3
I-131	2.5
I-132	9.0×10^{-1}
I-133	4.0
I-134	5.6×10^{-1}
I-135	2.2
Te-132	2.6×10^{-1}
Te-134	2.9×10^{-2}
Cs-134	2.1×10^{-1}
Cs-136	1.4×10^{-1}
Cs-137	1.0
Cs-138	9.5×10^{-1}
Ba-140	4.2×10^{-3}
La-140	1.5×10^{-3}
Ce-144	2.7×10^{-4}
Pr-144	2.7×10^{-4}
Kr-85	4.7 (Peak)
Kr-85m	2.2
Kr-87	1.2
Kr-88	3.7
Xe-131m	1.9
Xe-133	2.88×10^{2}
Xe-133m	3.2
Xe-135	6.3
Xe-135m	1.9×10^{-1}
Xe-138	6.8×10^{-1}
Mn-54*	7.7×10^{-4}
Mn-56*	2.9×10^{-2}
Co-58*	2.5×10^{-2}
Co-60*	7.4×10^{-4}
Fe-59*	1.0×10^{-3}
Cr-51*	9.3×10^{-4}

* Corrosion Product activities based on activity levels measured at operating reactors.

Table 11.1-3 Equilibrium Volume Control Tank Historical Design Activities
(Based on parameters given in Table 11.1-1)

Isotope	Vapor activity (Curies)
Kr-85	7.6
Kr-85m	5.6×10^1
Kr-87	2.2×10^1
Kr-88	1.1×10^2
Xe-131m	8.8×10^1
Xe-133	1.4×10^4
Xe-133m	1.5×10^2
Xe-135	2.5×10^2
Xe-135m	less than 1
Xe-138	4.6
	Liquid activity (Curies)
I-131	1.1
I-132	0.41
I-133	1.8
I-134	0.26
I-135	1.0

Table 11.1-4 Pressurizer Historical Design Activities

Isotope	Vapor activity (μ Ci/cc)
Kr-85	5.1×10^{1}
Kr-85m	1.0×10^{-1}
Kr-87	1.8×10^{-2}
Kr-88	1.2×10^{-1}
Xe-131m	4.7
Xe-133	3.6×10^{2}
Xe-133m	1.8
Xe-135	6.5×10^{-1}
Xe-135m	5.0×10^{-4}
Xe-138	2.2×10^{-3}
	Liquid activity (μ Ci/gm)
Rb-88	1.1×10^{-2}
Mo-99	2.2
I-131	1.6
I-132	2.0×10^{-2}
I-133	0.7
I-134	5.5×10^{-3}
I-135	0.14
Cs-137	1.3
Cs-138	5.5×10^{-3}

Table 11.1-5 Historical Design Inventory In The Gaseous Waste Processing System Single Unit

Isotope	Activity* (Curies)
Kr-85	4.4×10^{3}**
Kr-85m	6.2×10^{2}
Kr-87	3.3×10^{2}
Kr-88	1.1×10^{3}
Xe-131m	5.7×10^{2}
Xe-133	8.7×10^{4}
Xe-133m	9.7×10^{2}
Xe-135	1.9×10^{3}
Xe-135m	4.8×10^{1}
Xe-138	1.8×10^{2}

* For two units, the activities are doubled

** Represents the inventory of Kr-85 released to the reactor coolant during one year of full power operation. The remaining isotopes are equilibrium values.

Table 11.1-6 Parameters Used To Describe The Reactor Coolant System Realistic Basis

	Symbol	Units	Nominal ANS-18.1- 1984 Assumption	WBN Analysis Assumption
Thermal power	P	MWt	3400	3582
Steam flow rate	FS	lb/hr	1.5E+07	1.5E+07
Weight of water in all reactor coolant system	WP	lb	5.5E+05	5.4E+05
Weight of water in all steam generators	WS	lb	4.50E+05	3.48E+05
Reactor coolant letdown flow rate (purification)	FD	lb/hr	3.7E+04	3.7E+04
Reactor coolant letdown flow rate (yearly average for boron control)	FB	lb/hr	500	845
Steam generator blowdown flow (average total)	FBD	lb/hr	7.50E+04	3.00E+04
Fraction of radioactivity in blowdown stream which is not returned to the secondary coolant system	NBD	-	1.0	1.0
Flow through the purification system cation demineralizer	FA	lb/hr	3.7E+03	3.7E+03
Ratio of condensate demineralizer flow rate to the total steam flow rate	NC	-	0.0	0.55
Fraction of the noble gas activity in the letdown stream which is not returned to the reactor coolant system (not including the boron recovery system)	Y	-	0.0	0.0

Table 11.1-7 Specific Activities In Principal Fluid Streams
Realistic Basis (µCi/gm)
(Page 1 of 2)

Isotope	Reactor Coolant	Secondary Coolant Water	Secondary Coolant Steam
	Class 1 Noble Gases		
Kr-85m	1.71E-01	0.00E+00	3.63E-08
Kr-85	2.66E-01	0.00E+00	5.51E-08
Kr-87	1.61E-01	0.00E+00	3.22E-08
Kr-88	3.00E-01	0.00E+00	6.31E-08
Xe-131m	6.54E-01	0.00E+00	1.34E-07
Xe-133m	7.17E-02	0.00E+00	1.54E-08
Xe-133	2.53E+00	0.00E+00	5.25E-07
Xe-135m	1.39E-01	0.00E+00	2.90E-08
Xe-135	9.04E-01	0.00E+00	1.91E-07
Xe-137	3.65E-02	0.00E+00	7.62E-09
Xe-138	1.29E-01	0.00E+00	2.68E-08
	Class 2 Halogens		
Br-84	1.72E-02	9.56E-08	9.56E-10
I-131	4.77E-02	1.41E-06	1.41E-08
I-132	2.25E-01	3.37E-06	3.37E-08
I-133	1.49E-01	4.03E-06	4.03E-08
I-134	3.64E-01	2.93E-06	2.93E-08
I-135	2.78E-01	6.19E-06	6.19E-08
	Class 3 Cs, Rb		
Rb-88	2.04E-01	7.36E-07	3.61E-09
Cs-134	7.39E-03	4.58E-07	2.36E-09
Cs-136	9.08E-04	5.56E-08	2.78E-10
Cs-137	9.79E-03	6.11E-07	3.05E-09
	Class 4 Water Activation Products		
N-16	4.00E+01	1.29E-06	1.29E-07
	Class 5 Tritium		
H-3	1.00E+00	1.00E-03	1.00E-03

Table 11.1-7 Specific Activities In Principal Fluid Streams
Realistic Basis (µCi/gm)
(Page 2 of 2)

Class 6 Other Isotopes			
Na-24	4.99E-02	1.86E-06	9.30E-09
Cr-51	3.26E-03	1.56E-07	7.56E-10
Mn-54	1.68E-03	7.80E-08	3.96E-10
Fe-55	1.26E-03	5.88E-08	3.00E-10
Fe-59	3.16E-04	1.44E-08	7.32E-11
Co-58	4.84E-03	2.28E-07	1.13E-09
Co-60	5.58E-04	2.64E-08	1.32E-10
Zn-65	5.37E-04	2.52E-08	1.20E-10
Sr-89	1.47E-04	6.84E-09	3.48E-11
Sr-90	1.26E-05	5.88E-10	3.00E-12
Sr-91	1.02E-03	3.52E-08	1.76E-10
Y-90	1.26E-05	5.88E-10	3.00E-12
Y-91m	4.93E-04	4.34E-09	2.17E-11
Y-91	5.47E-06	2.52E-10	1.32E-12
Y-93	4.46E-03	1.50E-07	7.65E-10
Zr-95	4.10E-04	1.92E-08	9.48E-11
Nb-95	2.95E-04	1.32E-08	6.84E-11
Mo-99	6.75E-03	3.03E-07	1.45E-09
Tc-99m	5.01E-03	1.40E-07	7.27E-10
Ru-103	7.89E-03	3.72E-07	1.92E-09
Ru-106	9.47E-02	4.44E-06	2.16E-08
Rh-103	7.89E-03	3.72E-07	1.92E-09
Rh-106	9.47E-02	4.44E-06	2.16E-08
Ag-110m	1.37E-03	6.36E-08	3.24E-10
Te-129m	2.00E-04	9.36E-09	4.68E-11
Te-129	2.57E-02	2.96E-07	1.48E-09
Te-131m	1.59E-03	6.60E-08	3.30E-10
Te-131	8.26E-03	3.97E-08	2.05E-10
Te-132	1.79E-03	7.98E-08	3.99E-10
Ba-137m	9.79E-03	6.11E-07	3.05E-09
Ba-140	1.37E-02	6.25E-07	3.12E-09
La-140	2.64E-02	1.13E-06	5.60E-09
Ce-141	1.58E-04	7.32E-09	3.72E-11
Ce-143	2.96E-03	1.22E-07	6.23E-10
Ce-144	4.21E-03	1.92E-07	9.83E-10
Pr-143	2.96E-03	1.22E-07	6.23E-10
Pr-144	4.21E-03	1.92E-07	9.83E-10
W-187	2.65E-03	1.07E-07	5.40E-10
Np-239	2.32E-03	1.02E-07	5.09E-10

THIS PAGE INTENTIONALLY BLANK

11.2 LIQUID WASTE SYSTEMS

11.2.1 DESIGN OBJECTIVES

The Liquid Waste Processing System is designed to receive, segregate, process, and discharge liquid wastes. The system design considers potential personnel exposure and assures that quantities of radioactive releases to the environment are as low as reasonably achievable. Under normal plant operation, the activity from radionuclides leaving the cooling tower blowdown (CTB) line is a fraction of the limits in 10 CFR Parts 20 and 50.

The plant is designed to stay within 10 CFR 20 radiological criteria during normal operation, even assuming equipment faults which could occur with moderate frequency, including fuel cladding defects and failures of up to two TPBARs (Unit 1 only) in combination with such occurrences as:

(1) Steam Generator tube leaks

(2) Malfunction in Liquid Waste Processing System

(3) Excessive leakage in Reactor Coolant System Equipment

(4) Excessive leakage in Auxiliary System Equipment

The expected annual activity releases (by isotope) are presented in Subsection 11.2.6, and the estimated doses are presented in Subsection 11.2.9.

11.2.2 SYSTEMS DESCRIPTIONS

The Liquid Waste Processing System collects and processes potentially radioactive wastes for release to the river. Provisions are made to sample and analyze fluids before they are discharged. Based on the laboratory analysis, these wastes are either released under controlled conditions via the cooling tower blowdown or retained for further processing. A permanent record of liquid releases is provided by analyses of known volumes of waste. The system is shown on the Mechanical Flow Diagram (Figure 11.2-1.)

The radioactive liquids discharged from the Reactor Coolant System are processed by either the Chemical and Volume Control System (CVCS) holdup tanks or Tritiated Drain Collector Tank (TDCT). Expected volumes to be processed by the Waste Processing System are given in Table 11.2-1.

The liquid Waste Processing System (WPS) consists of two main sub-systems processing tritiated and non-tritiated water. A system is provided for handling laboratory samples which may be tritiated and may contain chemicals.

Much of the system is controlled or monitored from a central panel in the Auxiliary Building. Malfunction of the system actuates an alarm in the Auxiliary Building and a common alarm in the main control room (MCR). All liquid WPS equipment is located

in or near the Auxiliary Building, except for the reactor coolant drain tank and drain tank pumps; containment pit sump and pumps; Reactor Building floor and equipment drain sump and pumps; Reactor Building floor and equipment drain pocket sump and pumps, which are located in the Reactor Building. A mobile demineralizer system is located and operated in the waste packaging area.

Fluid is sampled and analyzed to determine quantities of radioactivity, with an isotopic breakdown, if necessary, before processing or disposal is attempted.

At least two valves must be manually opened to permit discharge of liquid to the environment. One of these valves is normally locked closed. A control valve trips closed on a high effluent radioactivity level signal. Controls are provided to prevent discharge without adequate dilution.

The liquid waste processing system is partly shared by the two units. However, except for its containment isolation function, the system serves no primary safety function and the safety of either unit is not affected by such sharing. Liquid waste is processed, as necessary, through a mobile demineralizer.

The Liquid Waste Processing System components that are not shared consist of one reactor coolant drain tank with two pumps, the containment pit sump with one pump, the Reactor Building floor and equipment drain pocket sump with two pumps, and the Reactor Building floor and equipment drain sump with two pumps. All of this equipment is located inside the containment of each unit.

Shared Components

The following shared equipment is located inside the Auxiliary Building: one tritiated drain collector tank with two pumps and one filter, one floor drain collector tank with two pumps and one filter; three waste condensate tanks and two pumps; a chemical drain tank and pump; two laundry and hot shower tanks and pump; a spent resin storage tank; a cask decontamination collector tank with two pumps and two filters; monitor tank with two pumps; Auxiliary Building floor and equipment drain sump and pumps; one tritiated equipment drain sump with two pumps; Auxiliary Building passive sump; a mobile demineralizer system, and the associated piping, valves and instrumentation.

The following shared components are located in the Turbine Building for receiving, processing, and transferring wastes from the regeneration of condensate demineralizers: high crud tanks, pumps and filter, a neutralization tank and pumps, and a non-reclaimable waste tank and pumps.

The following shared components are located in the waste packaging area for receiving and processing liquid radwaste from the floor drain and tritiated drain collector tanks: a mobile demineralizer system, including cation and anion ion exchange resins, prefilter, associated pumps, a vendor supplied mobile demineralizer spent resin storage container, and associated piping and valves.

Separation of Tritiated and Non-Tritiated Liquids

Waste liquids are normally separated into tritiated and non-tritiated liquids. Waste liquids which are high in tritium content (reactor coolant leakoff/leakage) are routed to the tritiated drain collector tank, while liquids low in tritium content (non-reactor coolant/raw water) are routed to the floor drain collector tank. The tritiated and non-tritiated liquids are processed for release to the river.

Tritiated Water Processing

Tritiated water is processed for discharge to the river. The water enters the liquid waste disposal system from equipment leaks and drains, valve leakoffs, pump seal leakoffs, tank overflows, and other tritiated and aerated water sources.

The equipment provided in this subsystem consists of a TDCT, pumps and filter, reactor coolant drain tank and pumps; the containment pit sump and pump; the Reactor Building floor and equipment drain sump and pumps; the Reactor Building floor and equipment drain pocket sump; tritiated equipment drain sump, pumps and filter. The primary function of the tritiated drain collector tank is to provide sufficient surge capacity for the waste processing equipment. The waste is primarily processed by the mobile demineralizer system.

Non-Tritiated Water Processing

Non-tritiated water is processed for discharge to the river. The sources include floor drains, equipment drains containing non-tritiated water, certain sample room and radiochemical laboratory drains, laundry and hot shower drains and other non-tritiated sources. The equipment provided in this subsystem consists of pumps and filter; laundry and hot shower tanks and pump; laundry tank basket strainer; waste condensate tanks, pumps and filter; mobile demineralizer; chemical drain tank and pump; the Auxiliary Building floor and equipment drain sump and pumps; the Additional Equipment Building floor and equipment drain sump and pumps.

Liquids entering the floor drain collector tank are normally from low activity sources and are normally processed through a mobile demineralizer system.

The laundry and hot shower drains normally need no treatment for removal of radioactivity. This water is collected in the laundry and hot shower drain tanks. The inventory of these tanks may be discharged directly to the cooling tower blowdown (via the laundry tank strainer) or may be transferred to either the waste condensate tanks or the cask decontamination collector tank or to the monitor tank or the FDCT (via the laundry tank strainer) before final discharge to the cooling tower blowdown. Prior to discharge, a sample is taken and analyzed in accordance with plant procedures that implement the ODCM requirements, and the water is discharged if the activity level is below ODCM limits.

The blowdown from the steam generators is routed to the CPDS or the hotwell (refer to Subsection 10.4.8) or discharged directly to the cooling tower blowdown line.

Spent regenerant waste from the CPDS is addressed below.

Mobile Demineralizer System Processing of Tritiated and Non-Tritiated Waste

Flow from both the tritiated and nontritiated tanks is routed to a Mobile Demineralizer System by use of the floor drain collector tank pumps, tritiated drain collector tank pumps, and gas stripper feed pumps.

Processed water from the system is routed to either the monitor tank or the CDCT. The contents of these tanks are discharged as described in the two previous sections or processed further, as necessary, to meet ODCM limits. The Mobile Demineralizer System removes most soluble and suspended radioactive materials from the waste stream via ion exchange and filtration. Once the resin and filter media is expended, the spent resin is sluiced to either a liner for disposal or a Rad-Vault to accumulate enough resin for off-site disposal. The spent resin is dewatered to meet the disposal site criteria.The filters are stored in an appropriate container.

Laboratory Sample Waste Processing

The chemical drain tank receives inputs from the laboratory and the decontamination room. If the radioactivity level is low and the chemical content is suitable for release, the tank contents can be discharged to the cooling tower blowdown line for release to the environment. If analysis shows that there are no chemicals present which would be harmful to the demineralizer, the liquid is sent to the FDCT for processing. The tank contents may also be sent to the waste packaging area for solidification if required.

Processing of Waste from Regeneration of Condensate Polishing Demineralizer

Wastes produced in the regeneration of the CPDS are processed for discharge or reuse. The high crud tanks contain high crud, low conductivity waste (containing no regeneration chemicals) which are filtered and discharged when the radioactive level does not exceed ODCM limits. When limits are exceeded, the high crud, low conductivity waste may be processed by the mobile demineralizer. The high crud tanks may also contain regeneration chemicals if additional capacity is required. The tank would normally be processed by a vendor if it contains regeneration chemicals . The neutralization and non-reclaimable waste tanks contain low crud, high conductivity waste which is neutralized. If it contains radioactive material above ODCM limits, it is processed by a vendor.

Spent Resin Processing

Spent resins are processed in accordance with Section 11.5.

11.2.3 SYSTEM DESIGN

11.2.3.1 Component Design

A summary of principal design parameters are given in Table 11.2-2. Design codes for the components of the Liquid Waste Processing System are given in Chapter 3. Materials of the Liquid Waste Processing System are selected to meet the material requirements of the system and applicable codes. Parts of components in contact with borated water are normally fabricated or clad with austenitic stainless steel. In addition pumps are normally provided with vent and drain connections. The mobile waste

demineralizer system is constructed to the applicable parts of Regulatory Guide 1.143, Revision 1, 1979.

Reactor Coolant Drain Tank (RCDT) and Pumps

The reactor coolant drain tank (one tank per unit) collects clean reactor coolant type water from inside the reactor containment. Two pumps per unit are provided to transfer the liquid from the drain tank to the Chemical and Volume Control System holdup tanks and to transfer water from the refueling canal to the refueling water storage tank or tritiated drain collector tank. The maximum load on the pumps occurs when the pressurizer relief tank drains and the excess letdown flow are imposed simultaneously or when the refueling canal is being drained. The normal load on the pumps is a small quantity, mainly from leakoffs, although the excess letdown flow can be expected for relatively long periods of time during plant heatup.

Chemical Drain Tank and Pump

The shared chemical drain tank receives radioactive wastes from the radiochemical laboratory drains and from the decontamination room. The pump is provided to transfer the tank contents to the waste packaging area for solidification, CTB line, or the FDCT.

Tritiated Equipment Drain Sump and Pumps

Tritiated Equipment Drain Sump and Pumps collect and transport tritiated liquid wastes from equipment and lower elevation drains, which cannot drain by gravity to the tritiated drain collector tank. Two pumps are furnished to transfer the liquid collected to the tritiated drain collector tank. The sump vents to the building exhaust system.

Tritiated Drain Collector Tank (TDCT) and Pumps

The shared tank collects radioactive liquids from the primary plant which may contain tritiated water, boric acid and fission products. The primary function of the tank is to provide sufficient surge capacity for the waste processing system. Pump A is provided to transfer the tank contents to the mobile waste demineralizer system or condensate demineralizer waste evaporator. Pump B is provided, as a spare, to also transfer the tank contents.

Floor Drain Collector Tank (FDCT) and Pumps

The tank retains primarily non-reactor grade type fluids and some non-recyclable reactor grade water from certain drains in the Auxiliary Building. The tank is equipped with three pumps. The tank contents may be sent through the FDCT discharge filters. The liquids are processed through the mobile waste demineralizers and then collected in either the cask decontamination collector tank (CDCT) or the monitor tank. After the liquids are collected in one of these tanks, the contents are recirculated, mixed, sampled, and analyzed. If the radioactivity is within the discharge limits, the liquids are routed to the cooling tower blowdown for discharge.

Laundry and Hot Shower Tanks and Pump

The laundry and hot shower tanks collect wastes from the radiologically controlled access area drains and hot shower drains. A pump is used to transfer the liquid. A recirculation line is provided to permit mixing the contents of the isolated tank before taking samples for activity analysis if the tank is to be discharged directly to the CTB.

If the activity level is within discharge limits, the contents may be routed through the laundry basket strainer and discharged via the CTB or the CDCT. If the activity level is above discharge limits, the contents are routed to the FDCT for routing to the mobile waste demineralizer for processing.

Spent Resin Storage Tank

This tank is supplied for the storage of used demineralizer resins. Resin is held in this tank to allow for decay of short-lived isotopes and to allow accumulation of enough resin for shipment. A layer of water is maintained over the resins to prevent degradation due to decay heat (see Section 11.5).

Filters

Table 11.2-2 lists the standard filters required, their nominal ratings, and the material of the filter media. The TDCT, FDCT, waste condensate tank, and CDCT filters may be removed and reinstalled as necessary to prevent crud traps and particles from building up in the piping.

The methods employed to change filters and screens are dependent on activity levels. If the radiation level of the filter is low enough, it is changed manually. If activity levels do not permit manual change, the spent cartridge is removed remotely with temporary shielding to reduce personnel exposure. The spent cartridge is placed in a shielded container for transport and storage prior to packaging for shipment.

Monitor Tank and Cask Decontamination Collector Tank (CDCT)

The Monitor Tank and the CDCT are used as release tanks for liquid disposal. These tanks receive processed liquid from either the floor drain collector tank, the tritiated drain collector tank, or the CVCS hold up tanks via the mobile demineralizer. The CDCT may also receive liquid directly from the laundry and hot shower tanks.

The CDCT may also receive water from the spent fuel shipping cask drain. The contents are pumped to the cooling tower discharge line via the radwaste line if the activity is sufficiently low, and to the floor drain collector tank or returned to the mobile demineralizer for processing if the activity is too high for discharge.

Monitor Tank Pump and Cask Decontamination Pump

Two pumps are provided for each tank to recirculate and pump liquid. The CDCT processes the liquid through the cask decontamination filter to the waste discharge line. Normally, only one pump is used.

Waste Condensate Tanks

The waste condensate tanks are available for additional capacity to process effluent liquid from the laundry and hot shower drain tanks. Each of three tanks are discharged to the waste condensate pumps. These tank are not normally used for Unit 1 or Unit 2 operation.

Waste Condensate Pumps

Two waste condensate pumps are available to receive liquid from the waste condensate tanks. This liquid may be processed to the CTB if it is below the ODCM limits. The discharge can be recirculated back to the waste condensate tanks, to the monitor tank, or to the cask decontamination collector tank.

Condensate Polishing Demineralizer Waste Processing Equipment High Crud (HC) Tanks

These tanks collect high crud, low conductivity waste produced during the backwash phase of condensate polishing demineralizer regeneration. The high crud, low conductivity waste is filtered and is normally discharged to the cooling tower blowdown, processed to the Turbine Building sump or waste disposal, by the mobile demineralizer. The discharge (after filtration) is very near condensate quality and is discharged only if permissible discharge concentrations are not exceeded. The high crud tanks may also contain regenerative chemicals if additional capacity is required. The tank would normally then be processed by a vendor.

High Crud Pumps

Two pumps are provided to circulate the contents of the high crud tanks for sampling, and to pump the tank contents through the high crud pre-filter and high crud filters. Normally, only one pump is used.

High Crud Pre-Filters

Three bag filters are arranged in parallel upstream of the high crud filter to filter the discharge stream, thus reducing the loading and clogging of the high crud filters. The vessels are constructed of stainless steel with replaceable filter elements. During normal operation two filters are in service. The third filter which is on standby and isolated may be placed in service while changing out the clogged filters. Each vessel has pressure gauges upstream and downstream of the filters.

Neutralization Tank

This tank collects spent regenerant chemicals and rinses from CPDS regeneration (low crud, high conductivity waste) miscellaneous waste from the condensate polishing demineralizer sump and has the capability to receive and neutralize waste from the cation and anion regeneration tanks. Sulfuric acid or sodium hydroxide is typically added to adjust the pH. The tank contents are circulated during pH adjustment. After neutralization to a desired pH value, the tank contents are either processed to the non-reclaimable waste tank or discharged to the environment.

Neutralization Tank Pumps

Two pumps are provided to circulate the contents of the neutralization tanks and to transfer the contents to the non-reclaimable waste tank or pump them to the environment. Normally, only one pump is used.

Non-Reclaimable Waste Tank

This tank receives neutralized waste from the neutralization tank. The tank contents are routed to discharge if the radioactivity content is sufficiently low. If not, the contents are processed by a vendor.

Non-Reclaimable Waste Pumps

Two pumps are provided to pump contents of the non-reclaimable waste tank to discharge, to a vendor for processing, or to the Turbine Building sump.

Liquid Waste Processing System Valves

The design code for the valves is ASME III Class 3 for ANS Safety Class 2b or 3 or Class 2 for ANS Safety Class 2a and ANSI B31.1, ANSI B16.5 or MSS-SP-66 for Non-Nuclear Safety (NNS) valves. The valves in the liquid waste processing system are stainless steel. The majority of the valves involved are diaphragm valves. This type of valve provides positive control of stem leakage and is suitable for use as an isolation valve or in throttling service. In several instances, globe valves are substituted for diaphragm valves because of their ability to control flow over a wider range.

Valves are supplied for isolation of each major equipment item for maintenance, to direct and control the flow of waste through the system and for isolation of tanks for decay.

For the purpose of containment isolation, trip valves are installed.

Liquid Waste Disposal Piping

The piping design code is ASME III Class 3 for ANS Safety Class 2b or 3 or Class 2 for ANS Safety Class 2a and ANSI B31.1 for NNS. The piping is normally austenitic stainless steel and the piping joints are normally welded, except where flanged connections are used at pump, valve and instrument connections to facilitate removal for maintenance.

Facilities for Venting and Draining

Normally provisions have been made for venting and draining equipment which may require maintenance during the plant life. Vents and drains are normally provided either on the components themselves or in the pipe lines between the isolation valves. In general, each pipe line and component vent and drain is provided with a valve plus a back-up leakage barrier of either a blank flange or a threaded screw cap.

Mobile Waste Demineralization System

The mobile waste demineralization system (MWDS) consists of several vessels with an associated pumping skid and level control system. The MWDS normally processes liquids at a feed rate of approximately 40 gpm. However, during peak flow rates, the MWDS may process higher flow rates (approximately 140 gpm). The vessel headers have influent and effluent isolation valves and all piping is welded with long radius bends. Demineralizer vessels are operated inside shielding in the waste packaging area with a remote control panel to insure that the dose to personnel is within acceptable limits. The system is designed to the applicable portions of Regulatory Guide 1.143, Revision 1, 1979.

The MWDS provides in-line processing of liquid radwaste through filtration and demineralization. The MWDS receives both tritiated liquid (the tritiated drain collector tank, high crud low conductivity waste, and CVCS holdup tank) and nontritiated liquids (the floor drain collector tank). Processed water from the MWDS is sent to either the monitor tank or the CDCT for release to the river.

The liquid radwaste is processed through ion exchange and filtration which remove soluble and suspended radioactive materials from the waste streams. The first vessel is normally loaded with a filter media, such as activated carbon, to provide initial filtration of the radwaste. This filter medium removes solids, cobalt isotopes, existing in the form of colloidal-sized suspended solids and cleaning agents, and other chemicals that can be removed by absorption of the activated carbon. A mechanical filter loaded with filter cartridges can be used for filtration. This conditions the radwaste for treatment in the subsequent tanks.

The subsequent demineralizer tanks contain beds (anions and cations) of ion-exchange resins, which remove the soluble constituents of the waste stream. Once the resin and filter media is expended, the resin is removed from the MWDS vessels to either a liner for disposal or a RAD-Vault to accumulate enough resin for off-site disposal, and the filters are placed in a shielded container for transport and storage prior to off-site disposal.

Since the equipment for the MWDS is supplied by a vendor and the selected vendor may change from time to time, a detailed description of the system is not possible. The specific treatment steps and equipment used can also vary somewhat from vendor to vendor.

11.2.3.2 Instrumentation Design

The Waste Disposal System panel, which is located in the Auxillary Building, contains some of the controls and indications necessary to operate the system. Other controls and indicators are mounted near the equipment.

Alarms are shown separately on the WPS panel.

Most pumps are protected against loss of suction pressure by a control setpoint on the level instrumentation for the respective vessels feeding the pumps.

Pressure indicators upstream and downstream of filters provide local indications of pressure drops across each component. The radioactive effluent release monitoring instrumentation is described in Section 11.4.

11.2.4 Operating Procedure

The equipment installed to reduce the activity of radioactive effluents is maintained in good operating order and is operated to as low as reasonably achievable criteria, as stated in the ODCM. In order to assure that these conditions are met, administrative controls are exercised on overall operation of the system; preventive maintenance is utilized to ensure equipment is in optimum condition; and applicable industry experience and vendor information available is used in planning for operation at Watts Bar Nuclear Plant.

Administrative controls are exercised through the use of instructions covering such areas as valve alignment for various operations, equipment operating instructions, and other instructions pertinent to the proper operation of the processing equipment. Discharge permits are utilized to assure proper procedures are followed in sampling and analyzing any radioactive liquid to be discharged and in assuring proper valve alignments and other operating conditions before a release. These permits are signed and verified by those personnel performing the analysis and approving the release.

Preventive maintenance is performed in accordance with approved plant maintenance program procedures developed, considering applicable operating and maintenance experience as well as vendor information.

Operation of the Liquid Waste Processing System is essentially the same during all phases of normal reactor plant operation; the only differences are in the load on the system. The following sections discuss the operation of the system in performing its various functions. In this discussion, the term 'normal operation' should be taken to mean all phases of operation except operation under emergency or accident conditions. The Liquid Waste Processing System's only primary safety function is containment isolation.

Liquid Waste Processing

Normal Operation

During normal plant operation the system processes liquid from the following sources:

(1) Equipment drains and leaks

(2) Radioactive chemical laboratory drains

(3) Radioactive laundry and shower drains

(4) Decontamination area drains

(5) Demineralizer flushing, backwashing and regeneration of resin

(6) Sampling system

The system also collects and transfers liquids from the following sources directly to the reactor coolant drain tank for processing in the CVCS.

(1) Reactor coolant loops

(2) Pressurizer relief tank

(3) Reactor coolant pump secondary seals

(4) Excess letdown during startup

(5) Accumulators

(6) Valve and reactor vessel flange leakoffs

(7) Refueling canal drains

The liquid flows to the reactor coolant drain tank and is discharged directly to the CVCS holdup tanks by the reactor coolant drain pumps which are operated automatically by a level controller in the tank. These pumps can also return water from the refueling cavity to the refueling water storage tank. There is one reactor coolant drain tank with two reactor coolant drain pumps located inside containment.

Normally, the reactor coolant drain pumps are operated in the automatic mode, which allows pump operation and reactor coolant drain tank level to be controlled. The pumps can also be operated manually to control the tank level.

Where possible, waste liquids drain to the waste disposal system and tritiated drain collector tanks by gravity flow.

Separation of Tritiated and Non-tritiated Liquids

Waste liquids which are high in tritium content are routed to the tritiated drain collector tank, while liquids low in tritium content are routed to the floor drain collector tank. The tritiated and non-tritiated liquids are processed for release to the river.

Tritiated Water

Tritiated water enters the liquid waste disposal system via equipment leaks and drains, valve leakoffs, pump seal leakoffs, tank overflows, and other tritiated and aerated water sources.

The tritiated liquids from equipment leaks and drains, and valve leak-offs which are below the tritiated drain collector tank, are drained to the sump and are pumped from there to the tritiated drain collector tank. Normally, the sump pumps are operated in the automatic mode, which allows tank level to be controlled. The pumps can also be operated manually.

The liquid collected in the tritiated drain collector tank contains boric acid and fission product activity. The liquid collected is normally demineralized by the mobile waste demineralizer and is then analyzed and discharged to the river.

Non-Tritiated Water

Non-tritiated water sources include floor drains, equipment drains containing non-tritiated water, certain sample room and radiochemical laboratory drains, laundry and hot shower drains and other non-tritiated sources.

The liquids entering the floor drain collector tank are primarily from low activity sources. The liquid collected is normally demineralized by the mobile waste demineralizer and is then analyzed and discharged to the river.

Laundry and Hot Shower Drains

One of the two laundry and hot shower tanks is valved to receive waste at all times. When one tank is filled, it is valved out and the other tank is valved in. The full tank is then aligned with the laundry pump to mix the waste by recirculation. A sample is taken (if required) from a local sample connection to determine what subsequent handling of the waste liquid is required. Normally no treatment is required for removal of radioactivity. This water is transferred to either CTB or FDCT or to CDCT or to the waste condensate tanks or to the monitor tank (all via the laundry tanks strainer). A sample is taken and, after analysis, the water is discharged in accordance with the ODCM limits.

Laboratory Samples

Laboratory samples which contain chemicals used in analysis are normally discarded in a fume hood sink which drains to the chemical drain tank.

The operation of the chemical drain tank pump and control of the tank level is manual, with the exception that the pump is shut off automatically on low tank level.

Low activity drains from the laboratory, such as flush water, are normally routed to the floor drain collector tank. Excess tritiated samples not contaminated by chemicals during analysis are normally directed to the tritiated drain collector tank.

Shipping Cask Drains

Liquid in this area is drained to the CDCT. The liquid is expected to be low enough in radioactivity content that it can be discharged without processing. Following analysis, the liquid is discharged. In the unlikely event that the radioactivity level is such that further processing is required, the liquid may be transferred to the floor drain collector tank or returned to the Mobile Waste Demineralizer System for further processing.

Condensate Polishing Demineralizer Waste

The condensate polishing demineralizer system (CPDS) is described in Section 10.4.6. Section 10.4.6 includes a discussion of the regeneration process. Treatment of regeneration wastes is described in this section.

The CPDS regeneration subsystem is designed to separate wastes into two fractions - one, a high-crud, low-conductivity liquid; and the other, a low-crud, high-conductivity liquid. These fractions are collected in separate tanks. The first fraction results from backwash which precedes chemical regeneration and from rinses which follow chemical regeneration. The second fraction consists of neutralized chemical regenerants plus displacement water. At each regeneration, the volume of the first fraction is about 23,000 gallons, and that of the second fraction is about 10,000 gallons.

Treatment of High-Crud, Low Conductivity (HCLC) Waste

The high-crud waste is normally low in conductivity. This waste is processed in equipment located in the Turbine Building. The slurry is filtered in the HC pre-filter or HC filter. The filtrate radioactivity is low enough to achieve adequate dilution in the cooling tower blowdown, in accordance with the ODCM, and is normally discharged. If the waste can not be properly diluted, it can be routed to the mobile demineralizers for further processing. Following a filter run in the HC filter, the filter is backwashed and the liquid is routed to the HC tank.

Treatment of Low-Crud, High-Conductivity (LCHC) Waste

The LCHC wastes, consisting of the spent regeneration chemicals is neutralized in a neutralizer tank and may be transferred to a non-reclaimable waste tank. The liquid is normally processed by a vendor if the radioactivity is above the ODCM limit. However, the liquid is circulated and sampled prior to processing. If the radioactivity level is below permissible discharge levels, it may be discharged directly without further treatment.

Discharge of Regeneration Wastes

Waste liquids from the CPDS regeneration that are to be discharged are sampled and analyzed as required per the ODCM to ensure that the activity level complies with requirements stated in the ODCM. The discharge line from the Turbine Building extends to the cooling tower blowdown line, and includes a locked-closed valve, a radiation monitor, and a radiation-controlled valve. The latter is arranged to close on a high radiation signal from the monitor. It is closed also by a signal from the flow meter in the cooling tower blowdown line on low flow, indicating inadequate dilution flow.

Spent Resin Handling

This portion of the system sluices resin from the demineralizers and transports resin from the spent resin storage tank to the railroad access bay to be dewatered or solidified by an offsite contractor.

CVCS Resin Sluicing

Spent resins are initially fluidized by backflushing with primary water. The backflush water is routed to the tritiated drain collector tank.

The resin is then drained and flushed to the spent resin storage tank. Fresh resin is then added and the demineralizer is filled with water, as a cover, over the resin. The

valves are then realigned for normal process operation. A negligible amount, if any, of resin is expected to remain in a demineralizer after flushing, as the demineralizers are completely flushable.

Refueling

Operation of the Liquid Waste Processing System is the same during refueling as during normal operation. When refueling is complete, the water remaining in the refueling canal following normal drain-down by the Residual Heat Removal System is drained to the reactor coolant drain tank and pumped back to the refueling water storage tank with the reactor coolant drain tank pumps. The pumps normally operate in the automatic mode during this operation. Since there is oxygen in the refueling water, the drain tank is isolated from the vent header during this transfer and the tank is vented to the containment atmosphere. It is necessary to purge the tank with nitrogen before connecting it back to the vent header.

Faults of Moderate Frequency

The system is designed to handle the occurrence of equipment faults of moderate frequency such as:

(1) Malfunction in the Liquid Waste Processing System

Malfunction in this system could include such things as pump or valve failures. Because of pump standardization throughout the system, a spare pump can be used to replace most pumps in the system. There is sufficient surge capacity in the system to accommodate waste until the failures can be fixed and normal plant operation resumed.

(2) Excessive Leakage in Reactor Coolant System Equipment

The system is designed to handle a one gpm reactor coolant leak in addition to the expected leakage during normal operation. Operation of the system is almost the same as for normal operation except the load on the system is increased. A one gpm leak into the reactor coolant drain tank is handled automatically but will increase the load factor of the CVCS. If the one gpm leak enters the tritiated drain collector tank, operation is the same as normal except for the increased load on the system. Abnormal liquid volumes of reactor coolant resulting from excessive reactor coolant or auxiliary building equipment leakage (1 gpm) can also be accommodated by the floor drain collector tank and processed by the non-tritiated system. Valve and pump leakoffs are all processed through the tritiated drain collector tank and non-reusable reactor coolant entering the floor drain collector tank is processed for release to the river.

(3) Excessive Leakage in Auxiliary System Equipment

Leakage of this type could include water from steam side leaks inside the containment which are collected in the Reactor Building floor and equipment drain sump. Although the sump pump discharge is normally routed to the

tritiated drain collector tank, the flow can be diverted to the floor drain collector tank upon discovery of a leak. Other sources could be component cooling water leaks, essential raw cooling water leaks, and secondary side leaks. This water enters the floor drain collector tank and will be processed and discharged as during normal operation.

(4) Steam Generator Tube Leaks

During periods of operation with fuel defects, coincident with steam generator tube leaks, radioactive liquid is discharged via the steam generator blowdown system. The releases from the secondary side will be within the ODCM limits.

Releases of Waste

Release of radioactive liquid out of the Liquid Waste Processing System is from the waste condensate tanks, cask decontamination collector tank, monitor tank, chemical drain tank, and laundry and hot shower tank to the blowdown line from the cooling towers. The cooling tower blowdown line discharges into the river through the diffuser pipes. Liquid wastes from the condensate polishing demineralizer system are released from the high-crud tanks, the non-reclaimable waste tank, and the neutralization tank.

The condenser circulating water system operates in the closed cycle mode. Water is recirculated between the cooling towers and the condenser. The cooling towers blowdown flows to the diffuser in order to maintain the solids in the water at an acceptable level.

Release of the radioactive liquids from the liquid waste system is made only after laboratory analysis of the tank contents. If the activity is not below ODCM limits, the liquid waste streams are returned to waste disposal system for further processing by the mobile demineralizer. Once the fluids are sampled, they are pumped to the discharge pipe through a normally locked closed manual valve and a remotely operated control valve, interlocked with a radiation monitor and a flow element in the cooling tower blowdown line. This assures that sufficient dilution flow is available for the discharge of radioactive liquids. The minimum dilution flow required for discharge of radioactivity into the cooling tower blowdown lines (CTBL) is 20,000 gpm.

A similar arrangement is provided for wastes discharged from the condensate polishing demineralizer system. A radiation monitor on this system and a flow element on the cooling tower blowdown are interlocked with a flow control valve in the system discharge line. Release of wastes is automatically stopped by either a high radiation signal or a signal which indicates that inadequate dilution flow is available. The CPDS and SGB may be released with the CTB flow less than 20,000 gpm provided the sum of the Effluent Concentration Limit (ECL) fractions (release concentrations/10 CFR 20 ECLs) for all isotopes released is less than or equal to 10 as required by the Technical Specifications and ODCM, and provided such releases are controlled and limited such that the 10 CFR 50, Appendix I limits are not exceeded.

The steam generator blowdown system also may discharge radioactive liquid. Liquid waste from this system is not collected in tanks for treatment, but is continuously monitored for radioactivity and may discharge to the cooling tower blowdown, or recirculated to the condensate system upstream of the condensate demineralizers. Refer to Section 10.4.8 for a description of the steam generator blowdown system operation.

The turbine building sump collects liquid entering the turbine building floor drain system. When the sump is nearly full (approximate usable capacity of 30,000 gallons), the liquid is pumped to either the low volume waste treatment (LVWT) pond or the yard holding pond. Water in the ponds drains by gravity to the river via the cooling tower blowdown line to the diffusers. If high concentrations of chemicals are present, it may be pumped to the lined or unlined chemical holdup ponds for treatment before release per the NPDES Permit.

Station Blackout

The Liquid Waste Processing System (except for containment isolation) does not normally operate during a blackout. If necessary, equipment with diesel backup power can be manually connected to the emergency power sources when they become available.

Loss-of-Coolant Accident

The Liquid Waste Processing System (except for containment isolation) is not required to operate during, or immediately following, a loss-of-coolant accident. Equipment may be started manually as required.

Operating Experience

Demineralizers

Operational data on CPDS decontamination factors (DF) is derived from NUREG–0017, Revision 1 [Ref. 1]. The DF for MWDS was supplied by a vendor.

11.2.5 PERFORMANCE TESTS

Initial performance tests were performed to verify the operability of the components, instrumentation and control equipment and applicable alarms and control setpoints.

The specific objectives were to demonstrate the following:

(1) Pumps are capable of producing flow rate and head as required.

(2) Waste filters are capable of passing required flow rate.

(3) Instrumentation, controllers, and alarms operate satisfactorily to maintain levels, pressures, and flow rates and indicates, records, and alarms, as required.

(4) Sampling points are available for sampling.

During reactor operation, the system is used at all times and hence is under surveillance. Data is taken periodically (if applicable) for use in determining decontamination factors of demineralizers.

11.2.6 ESTIMATED RELEASES

11.2.6.1 NRC Requirements

The following documents have been issued to provide regulations and guidelines for release of radioactive liquids:

(1) 10 CFR 20, Standards for Protection Against Radiation.

(2) 10 CFR 50, Licensing of Production and Utilization Facilities.

11.2.6.2 Westinghouse PWR Release Experience

The liquid releases are highly dependent upon administrative activities which control the use of water for decontamination, equipment and floor rinsing and other uses in the controlled areas.

Operating plants have reported liquid discharges as shown in Table 11.2-3.

11.2.6.3 Expected Liquid Waste Processing System Releases

The quantities and isotopic concentration in liquids assumed discharged to the liquid waste processing system, and hence the releases to the environment, are highly dependent upon the operation of the plant. The radionuclide concentrations and calculated doses are the principal focus of treatment activities. Volume released is a secondary focus. The analysis for Watts Bar is based on engineering judgement, with respect to the operation of the plant and the liquid waste processing system, and realistic estimation of the potential input sources. Hence, the results are representative of typical releases from the Watts Bar liquid waste processing system.

The input sources, the computational data and assumptions are summarized in Table 11.2-1. The isotopic composition of reactor coolant (RC) is based on ANSI/ANS-18.1-1984 and includes the projected tritium permeation from 2,304 TPBARs (Unit 1 only). The associated releases in curies per year per nuclide are given in Table 11.2-5.

The liquid waste processing system is assumed to operate as described in Subsection 11.2.4.

11.2.6.4 Turbine Building (TB) Drains

11.2.6.4.1 Purpose

The TB drainage system is designed to remove liquid drainage in the Turbine Building.

11.2.6.4.2 Description

The TB drains are not normally radioactive.

The Turbine Building drainage consists of the following categories:

(a) Condensate Polishing Demineralizer System Drains

(b) Other TB drainage

(c) Oil and oily water drainage.

11.2.6.4.2.1 Condensate Polishing Demineralizer System Drains

The Condensate Polishing Demineralizer System (CPDS) area is serviced by separate floor and equipment drains. The drains for CPDS are routed to the Condensate Demineralizer sump where they are pumped to the Neutralization Tank (NT). These drains have a potential to be low-level radioactive during periods of primary to secondary leakage. The NT is provided with the capability of adjusting pH, and if the inventory is not radioactive or less than the dischargeable limit, it is normally discharged with a batch release to the CTB line. The NT is normally processed by a vendor if the inventory is above dischargeable limits. Any radioactive discharge from this release point is handled in accordance with the ODCM. Section 10.4.6 discusses the CPDS, and this chapter discusses the wastes from the system and their disposal under radioactive and non-radioactive conditions.

11.2.6.4.2.2 Other Turbine Building Drainage

Drainage from the Turbine Building areas other than the CPDS area is directed to the yard holding pond, normally, via the low volume waste treatment (LVWT) pond. Floor and equipment drainage in Turbine Building is first collected in the Turbine Building Station sump and is then pumped to the yard holding pond, normally, via the LVWT pond. Roof drainage flows by gravity directly to the yard holding pond.

11.2.6.4.2.3 Oil and Oily Water Drainage

Oil is drained directly to drums or tank trucks for reuse or removal from the plant. Oily water drains are furnished in the Turbine Building and are routed to the oil sump which is located in the low point of the Turbine Building. Oil may be accumulated in the sump until a sufficient amount is collected to be pumped into tank trucks for offsite disposal.

11.2.6.5 Estimated Total Liquid Releases

The potential releases have been evaluated as indicated in the above sections. The expected liquid releases from Watts Bar are well below the limit of 5 Curies (Ci) per year as prescribed in 10 CFR 50, Appendix I as shown by the values given in column 4 and 5 of Table 11.2-5. Column 6 (no CD processing) indicates a yearly release of 30.03 Ci with no Condensate Demineralizer (CD) processing of waste and no limitations on steam generator blow down concentrations. This operational mode is not normally used since long term use results in exceeding the 5 Ci/yr limit in 10 CFR 50, Appendix I. Column 7 of Table 11.2-5 indicates that the total release, including

untreated steam generator blow down, is significantly below the 10 CFR 50, Appendix I limit of 5 Ci/yr if the steam generator blow down concentration is restricted to the Lower Limit of Detection (LLD) of 5E-7 uCi/cc gross gamma during the release and no other Condensate Demineralizer waste is processed during the release. However, column 7 does include other releases from waste holdup tanks which are treated using the Mobile Demineralizers. Column 8 of Table 11.2-5 indicates steam generator blow down can be released untreated and remain within the 10 CFR 50, Appendix I limit of 5 Ci/yr if the Steam Generator Blow down concentration is restricted to a maximum concentration of 3.65E-5 uCi/cc gross gamma during the release and no other Condensate Demineralizer waste is processed during the release. However, column 8 does include other releases from waste holdup tanks which are treated using the Mobile Demineralizers.

Tables 11.2-5a, 11.2-5b, 11.2-5c, and 11.2-5d describe liquid releases for 1% failed fuel for both treated and untreated waste relative to the requirements of 10 CFR 20.1302(b). The sum over all isotopes of the concentrations/ECL (C/ECL) value from the Table 11.2-5a is greater than unity for the case where all isotopes are at design values and the released liquid is not processed by the Mobile Demineralizers. This mode of operation is not normally used since the C/ECL value exceeds the requirements of 10 CFR 20.1302(b). The bulk of the release is due to the untreated condensate resin regeneration waste. In order to prevent exceeding the 10 CFR 20.1302(b) limits, the condensate regeneration waste is rerouted through the Mobile Demineralizers if the long term releases from the condensate regeneration waste is greater than the 10 CFR 20 concentration limits. With Mobile Demineralizer processing of condensate regeneration waste, the release concentrations are shown in Table 11.2-5b and are less than the limits specified in 10 CFR 20.1302(b). Table 11.2-5c shows releases remain within the 10CFR 20 limits if the steam generator blow down concentration is restricted to the Lower Limit of Detection (LLD) of 5E-7 uCi/cc gross gamma during the release and no other Condensate Demineralizer waste is processed during the release. However, these releases do include other releases from waste holdup tanks which are treated using the Mobile Demineralizers. Table 11.2-5d shows releases remain within the 10CFR 20 limits if the steam generator blow down concentration is restricted to a maximum concentration of 3.65E-5 uCi/cc gross gamma during the release and no other Condensate Demineralizer waste is processed during the release. However, these releases do include other releases from waste holdup tanks which are treated using the Mobile Demineralizers.

Based on the above, the releases from the plant are in accordance with the design objectives as outlined in Section 11.2.1 and the Offsite Dose Calculation Manual.

11.2.7 RELEASE POINTS

All radioactive liquid wastes are released from the plant through the cooling tower blowdown line. The discharge points from the waste disposal system are shown in Figure 11.2-1 and 11.2-2. The connection to the cooling tower blowdown line is shown in Figure 10.4-5.

11.2.8 DILUTION FACTORS

The dosimetry calculations for drinking water are based on the assumption that the liquid effluent will be mixed with 10% of the river flow between the point of discharge and Tennessee River Mile (TRM) 510.0, where 100% dilution is assumed to occur. Further discussion of these calculations and dilution flows used is presented in section 11.2.9.1.

11.2.9 ESTIMATED DOSES FROM RADIONUCLIDES IN LIQUID EFFLUENTS

Doses from the ingestion of water, from the consumption of fish, and from shoreline recreation are calculated for exposures to radionuclides routinely released in liquid effluents.

11.2.9.1 Assumptions and Calculational Methods

Internal doses are calculated using methods outlined in NRC Regulatory Guide 1.109, Revision 1, October 1977. This model is used for estimating the doses to bone, gastro-intestinal (G.I.) tract, thyroid, liver, kidney, lung, skin, and total body of man from ingestion of water, consumption of fish, and from external exposures due to recreational activities. Population doses are estimated for the year 2040 based on the populations given in Table 2.1-12.

(1) Doses to Man from the Ingestion of Water

Data listed in Table 11.2-6 for public water supplies is used to calculate dose commitments from the consumption of Tennessee River water. The 2040 populations for the water supplies are estimated by multiplying the 1990 populations by a population growth factor of 1.24. This factor is the ratio of the 2040 population (Table 2.1-12) to the 1990 population. It is assumed that the plant effluent is mixed with one-tenth of the river flow in the 18-mile reach between the nuclear plant site and TRM 510.0. Although natural water turbulence will continue to increase the dispersion downstream, it is assumed that one-tenth dilution is maintained as far as TRM 510.0, where full-dilution is assumed.

Dilution is calculated using average annual flow data for the Tennessee River as measured during the 69-year period 1899-1968. The average flow past the site is approximately 28,000 ft^3/sec.

Radioactive decay between the time of intake in a water system and the time of consumption is handled in accordance with Regulatory Guide 1.109. Maximum and average consumption rates are those recommended by Regulatory Guide 1.109.

Due to a lack of definitive data, no credit is taken for removal of activity from the water through absorption on solids and sedimentation, by deposition in the biomass, or by processing within water treatment systems.

Internal doses, D, for an organ for a single radionuclide are calculated using the relation

D = DCF x I (1)

where:

DCF = the dose commitment factor for the organ from the radionuclide (mrem/pCi).

Values used are from Regulatory Guide 1.109.

I = the activity of the radionuclide taken into the body annually via ingestion, (pCi).

(2) Dose to Man from the Consumption of Fish

Current estimates of the Tennessee River fish harvest are 3.04 lb/acre/year. It is assumed that the rates will increase with the population expansion, so the dose calculations are based on harvests of 3.77 lb/acre of fish in the year 2040. This is determined by multiplying the 1990 harvest by the population growth factor. The Tennessee River, within 50 miles downstream of WBN, is segmented into 4 regions (Table 11.2-6) in order to facilitate the calculations of fish harvests and radioactivity concentrations. The radioactivity levels in the fish from each region are estimated by the product of an average activity concentration in the reach and a concentration factor for each radionuclide. The population dose is calculated using the assumption that all of the 3.77 lb/acre of fish caught is edible weight, and that the total harvest from each portion of the river is consumed by humans.

Dose commitments are calculated with Equation 1, which is discussed for water ingestion in the previous section.

Calculations indicate that there would be no significant radiological impact from human utilization of shellfish. Shellfish are not currently being harvested commercially in the Tennessee River; and consumption of shellfish by humans is assumed to be negligible.

(3) Doses to Man due to Shoreline Recreation

Estimates of the doses from shoreline recreation along the Tennessee River are calculated for each radionuclide using the following equation:

D = RDCF x C x T (mrem),

where:

RDCF = The shoreline recreation dose commitment factor, mrem/hour per pCi/m^2, from Regulatory Guide 1.109, Table E-6.

T = exposure time, hours.

C = Concentration of the radionuclide in the sediment, pCi/m^2; calculated using NRC Regulatory Guide 1.109 methodology. A shoreline width factor of 0.2 is used.

Doses to the population are calculated using estimates for shoreline visits (1990 values) multiplied by the population growth factor.

11.2.9.2 Summary of Dose from Radionuclides in Liquid Effluents

Radiation doses calculated for releases of radionuclides in liquid effluents during normal operation of the Watts Bar Nuclear Plant are summarized in Table 11.2-7. Liver tissues are expected to receive the greatest doses for the maximum individual; however, the thyroid tissues are expected to receive the greatest dose for the Tennessee Valley population.

REFERENCES

(1) NUREG-0017, R1, "Calculation of Releases of Radioactive Materials in Gaseous and Liquid Effluents from Pressurized Water Reactors," a PWR-GALE Code, Published April, 1985.

Table 11.2-1 Liquid Waste Processing System Calculation Basis
(Page 1 of 2)

1.0 Inputs (2 Units)[4]

1.1 Reactor Coolant Drain Tank
Tank Volume: 350 gal/unit
Input: 40 gpd
14,600 gal/yr
Activity: 0.1 PCA
Collection Time: 24 hrs
Processing Time: neglected

1.2 Tritiated Drain Collector Tank
Tank Volume: 24,700 gal
Input: 2,980 gpd
1,087,000 gal/yr
Activity: See Section 3.0
Collection Time: 24 hrs
Processing Time: 6 hrs

1.3 Floor Drain Collector Tank
Tank Volume: 23,000 gal
Input: 3,200 gpd
1,168,000 gal/yr
Activity: See Section 3.0
Collection Time: 24 hrs
Processing Time: 6 hrs

1.4 CVCS Letdown
Input: 4,863 gpd
1,775,107 gal/yr
Activity: 1.0 PCA
Collection Time:24 hrs
Processing Time:6 hrs

1.5 Chemical Drain Tank & Laundry and Hot Shower Tank
Input: 1080 gal/day (NUREG-0017 Table 1-3)
394,200 gal/yr
Activity: NUREG-0017 Table 2-27
Released without processing or decay

1.6 Condensate Polisher Regeneration Waste
Input: 6,800 gpd of waste (NUREG-0017 Table 1-3)
2,482,000 gal/yr
Activity: See Section 3.0

1.7 Steam Generator Blowdown
Input: 60,000 lb/hr (365 days)

Activity: See Section 3.0

Table 11.2-1 Liquid Waste Processing System Calculation Basis
(Page 2 of 2)

1.8 Gaseous Activity
All noble gases vent to gaseous waste processing system. All halogens remain in liquid.

2.0 Processing

2.1 Decontamination Factors except mobile demineralizer system based on NUREG-0017 Rev 1; Table 1-4

2.2 CVCS letdown first processed through CVCS mixed bed and cation demineralizers
DF = 20 for Cs & Rb
DF = 100 for all others

2.3 All processing through mobile demineralizer system
DF = 1000 for all isotopes except Cobalt 58 based on five (5) beds. The first is loaded with ion specific filtration media/activated carbon, followed by another ion specific media, a cation bed, and then two (2) mixed beds in series.
Flow rate: 40 gpm
DF = 100 for Co58

3.0 Leakage[1]

a) Reactor coolant pump seal leakage, 20 gal/day @ 0.1 PCA
b) Reactor containment cooling system, 500 gal/day @ 0.001 PCA[2]
c) Other leaks and drains, 10 gal/day @ 1.67 PCA[2]
d) Primary coolant equipment drains, 80 gal/day @ 1.0 PCA[2]
e) Reactor coolant sampling, 200 gal/day @ 0.05 PCA[2]
f) Spent fuel pit liner drains, 700 gal/day @ 0.001 PCA[2]
g) Auxiliary Building floor drains, 200 gal/day @ 0.1 PCA[3]
h) Secondary system sampling, 1400 gal/day @ 1 PCA(of SSC)(Note: NUREG-0017 uses 1E-4 PCA (RC), this calculation uses actual SSC activities, therefore PCA = 1 SSC)[3]
i) CVCS letdown (via holdup tanks), 845 lb/hr (2431.654 gal/day) @ 1 PCA
j) Input into the condensate resin regeneration waste (with resin DF=2 for Cs, Rb, and DF=10 for others) collected over a 6-day time period consisting of:
1) SGBD blowdown = 3E4 lb/hr (86330.93 gal/day) @ 1 PCA (of SSC)
2) Condensate flow = 1.5E7 lb/hr (steam flow)*0.55(flow split)=8.25E6 lb/hr @ 1 PCA (of SSS)
k) Turbine Building floor drains, 7200 gal/day @ 1 PCA (of SSC) (Note: no reactor coolant in Turbine Building).
l) LHST release taken directly from NUREG-0017 Table 2-27.

1. The leakage values are for 1 Unit.
2. Normally processed to TDCT.
3. Normally processed to FDCT.
4. Tabulated inputs are based on dual unit system use unless otherwise noted.

Table 11.2-2 Component Design Parameters*
(Page 1 of 7)

Reactor Coolant Drain Tank	
Number per unit	1
Type	Horizontal
Volume, gal	350
Design pressure, internal, psig	25
Design pressure, external, psig	60
Design temperature, °F	267
Normal operating pressure, range, psig	0.5-2.0
Normal operating temperature range, °F	50-200
Material of construction	Austenitic SS
Reactor Coolant Drain Tank Pumps	
Number per unit	2
Type	open face horizontal, centrifugal
Design flow rate, gpm	
Pump A	50
Pump B	150
Design head, ft	175
Design pressure, psig	150
Design temperature, °F	300
Required NPSH at design flow, ft	
Pump A	6
Pump B	6
Material, wetted surfaces	Austenitic SS
Chemical Drain Tank	
Number (shared)	1
Type	Vertical
Volume, gal	600
Design pressure	Atmospheric
Design temperature, °F	180
Normal operating pressure	Atmospheric
Normal operating temperature, °F	50-140
Material of construction	Austenitic SS
* For design codes and safety classes see Section 3.2	

Table 11.2-2 Component Design Parameters*
(Page 2 of 7)

Chemical Drain Pump		
Number (shared)	1	
Type	Horizontal, centrifugal, mechanical seal	
Design flow rate, gpm	20	
Design head, ft	100	
Design pressure, psig	150	
Design temperature, °F	180	
Required NPSH at design flow, ft	5	
Material	Austenitic SS	
Tritiated Drain Collector Tank		
Number (shared)	1	
Type	Horizontal	
Volume, gal	24,700	
Design pressure, psig	Atmospheric	
Design temperature, °F	180	
Normal operating pressure	Atmospheric	
Normal operating temperature, °F	50-140	
Material of construction	Austenitic SS	
Tritiated Drain Collector Tank Pumps		
Number (shared)	2	
Type	Horizontal, centrifugal, mechanical seal	
	Pump A	**Pump B**
Design flowrate, gpm	100	20
Design head, ft	100	100
Design pressure, psig	150	150
Design temperature, °F	180	180
Required NPSH at design flow, ft	20	5
Material	Austenitic SS	
Floor Drain Collector Tank		
Number (shared)	1	
Type	Horizontal	
Volume, gal	23,000	
Design pressure	Atmospheric	
Design temperature, °F	180	
Normal operating pressure	Atmospheric	
Normal operating temperature, °F	50-140	
Material of construction	Austenitic SS	

* For design codes and safety classes see Section 3.2

Table 11.2-2 Component Design Parameters*
(Page 3 of 7)

Floor Drain Collector Tank Pumps		
Number (shared)	2	
Type	Horizontal, centrifugal, mechanical seal	
	Pump A	**Pump B**
Design flow rate, gpm	100	20
Design head, ft	110	100
Design pressure, psig	150	150
Design temperature, °F	180	180
Required NPSH at design flow, ft	15	5
Material	Austenitic SS	
Waste Condensate Tanks		
Number (shared)	3	
Type	Vertical	
Volume, each, gal	1500	
Design pressure	Atmospheric	
Design temperature, °F	180	
Normal operating pressure	Atmospheric	
Material	Austenitic SS	
Waste Condensate Pumps		
Number (shared)	2	
Type	Horizontal, centrifugal	
Design flow rate, gpm	20	
Design head, ft	100	
Design pressure, psig	150	
Design temperature, °F	180	
Material, wetted surfaces	Austenitic SS	
Laundry and Hot Shower Tanks		
Number (shared)	2	
Type	Vertical	
Design temperature, °F	180	
Design pressure	Atmospheric	
Volume, gal	600	
Material	Stainless steel	
Laundry and Hot Shower Pump		
Number (shared)	1	
Design temperature, °F	180	
Design pressure, psig	150	

* For design codes and safety classes see Section 3.2

Table 11.2-2 Component Design Parameters*
(Page 4 of 7)

Laundry & Hot Shower Pump (Cont'd)	
Design head, ft	100
Design flow, gpm	20
Material contacting fluid	Stainless steel
Type	Horizontal, centri-fugal, mechanical seal
Monitor Tank (shared)	
Number	1
Capacity, gal.	20,462
Design pressure	Atmospheric
Design Temperature, °F	200
Material	Austenitic stainless steel
Monitor Tank Pumps (shared)	
Number	2
Design pressure, psig	150
Design Temperature, °F	200
Design flow, gpm	150
Design head, ft	200
Material	Austenitic stainless steel
Cask Decontamination Collector Tank	
Number (shared)	1
Volume, gal	15,000
Design pressure	Atmospheric
Design temperature, °F	180
Material	Carbon steel
Cask Decontamination Collector Tank Pumps	
Number (shared)	2
Flow rate, gpm	100
Design pressure, psig	150
Design temperature, °F	180
Material	Stainless steel
Cask Decontamination Collector Tank Filters	
Number (shared)	2
Flow rate, gpm	40
Design pressure, psig	200
Design temperature, °F	250
Material	304 stainless steel
* For design codes and safety classes see Section 3.2	

Table 11.2-2 Component Design Parameters*
(Page 5 of 7)

Spent Resin Storage Tank	
Number (shared)	1
Type	Vertical
Volume, each, ft^3	300
Design pressure, psig	100
Design temperature, °F	180
Normal operating pressure, psig	0.5 - 15
Normal operating temperature	Ambient
Material of construction	Austenitic SS
TDCT and FDCT Discharge Filters, Waste Condensate Tank Filter, and Waste Condenser Filter**	
Number (shared)	1
Type	Disposable synthetic cartridge
Design pressure, psig	200
Design temperature, °F	250
Flow rate, gpm	35
Pressure drop at 20 gpm, clean filter, psi	5
Maximum differential pressure, 100% fouled, psi	20
Retention for 25-micron particles, %	98
Materials	
Housing	Stainless steel
Filter element	Nylon
Laundry Tank Basket Strainer	
Number (shared)	1
Type	Perforated stainless steel sheet
Design flow rate, gpm	20
Design pressure, psig	150
Design temperature, °F	180
Diameter of perforation, in.	1/16
Pressure drop at design flow when clean, psi	0.5
Radiation levels outside	Negligible
Material, wetted surfaces	Austenitic SS

* For design codes and safety classes see Section 3.2

**Other filter media are allowed per vendor technical manual if they are equal or finer.

Table 11.2-2 Component Design Parameters*
(Page 6 of 7)

FDCT Discharge Pumps Strainer	
Number	1
Design flow rate, gpm	100
Design pressure, psig	150
Design temperature, °F	180
Diameter of perforation, in.	3/16
Pressure drop at design flow when clean, psi	2
Material	Stainless steel
High-Crud, Low-Conductivity Tanks	
Number (shared)	2
Volume of each tank, gal.	19,000
Design pressure	Atmospheric
Design temperature, °F	140
Material	Rubber lined carbon steel
High-Crud, Low-Conductivity Pumps	
Number (shared)	2
Flow rate, gpm	150
Design pressure, psig	150
Design temperature, °F	140
Material	Stainless steel
Head, ft. water	330

* For design codes and safety classes see Section 3.2

Table 11.2-2 Component Design Parameters*
(Page 7 of 7)

High-Crud Pre-Filters	
Number	3
Type	Bag Filter
Design pressure, psig	220
Design Temperature, °F	140
Flow rate, gpm	150
Material	304 Stainless steel
High-Crud, Low-Conductivity Filter	
Number (shared)	1
Type	Etched Disc-type
Design pressure, psig	375
Design temperature, °F	140
Flow rate, gpm	100 (dirty)
Maximum differential pressure, 100% fouled, psi	75
Materials	Stainless steel
Neutralization Tank	
Number (shared)	1
Volume, gal	20,000
Design pressure	Atmospheric
Design temperature, °F	140
Material	Rubber lined carbon steel
Neutralization Pumps	
Number (shared)	2
Flow rate, gpm	100
Design pressure, psig	150
Design temperature, °F	140
Material	Stainless steel
Head, ft. water	135
Non-Reclaimable Waste Tank	
Number (shared)	1
Volume, gal	10,000
Design pressure	Atmospheric
Design temperature, °F	140
Material	Rubber lined carbon steel
* For design codes and safety classes see Section 3.2	
Non-Reclaimable Waste Pumps	
Number (shared)	2
Flow rate, gpm	115
Design pressure, psig	150
Design temperature, °F	140
Material	Nickel Alloy
Head, ft. water	300
* For design codes and safety classes see Section 3.2	

Table 11.2-3 Radioactive Liquid Releases From Westinghouse Designed PWR Plants Historical Information

Plant	Year	Cladding	Average 2 Fuel Defects	Total Released Curies	Avg. Discharge Concentration Ci/ml	Fraction 10 CFR 20 Concentration
Yankee Rowe	1970	Stainless Steel	Neg.	0.036	1.5×10^{-10}	1.5×10^{-3}
	1971	- 0 -	0.001	0.0034	1.25×10^{-12}	1.25×10^{-5}
	1972			0.0013	4.7×10^{-12}	4.71×10^{-5}
Connecticut	1970	Stainless Steel	0.01	29.5	4.02×10^{-8}	4.02×10^{-1}
Yankee	1971	- 0 -	0.03	5.85	7.75×10^{-9}	7.75×10^{-2}
	1972			12.26	1.61×10^{-8}	1.61×10^{-1}
San Onofre	1970	Stainless Steel	0.007	3.41	6.1×10^{-9}	6.1×10^{-2}
	1971	- 0 -	0.015	9.21	1.34×10^{-8}	1.34×10^{-1}
	1972			28.5	4.11×10^{-8}	4.1×10^{-1}
R. E. Ginna	1970	Zircaloy	0.4	9.35	1.43×10^{-8}	1.43×10^{-1}
	1971	- 0 -	0.26	0.96	1.45×10^{-9}	1.45×10^{-2}
	1972			0.38	5.69×10^{-10}	5.7×10^{-3}
H. B. Robinson 2	1970	Zircaloy				
	1971	- 0 -	0.001	0.74	1.01×10^{-9}	1.01×10^{-2}
	1972			0.39	5.57×10^{-10}	5.6×10^{-3}
Point Beach	1970	Zircaloy				
	1971	- 0 -	0.01	0.14	2.48×10^{-10}	2.48×10^{-3}
	1972			1.53	2.68×10^{-9}	2.7×10^{-2}

Table 11.2-4 Total Annual Discharge Liquid Waste Processing System* Prior to Treatment

	Combined Tanks (Aux. Bldg)	CVCS	LHST	(Ci/yr) Con. Demin.	TB
Br-84	0.09825	1.84		2.043E-04	3.028E-05
I-131	8.21	153.7	0.0016	4.449E-01	1.346E-02
I-132	5.778	108.2		4.232E-02	5.213E-03
I-133	18.39	344.4		3.352E-01	2.758E-02
I-134	3.439	64.41		1.036E-02	1.535E-03
I-135	18.21	340.9		1.650E-01	2.248E-02
Rb-88	0.6522	12.22		3.065E-04	1.305E-04
Cs-134	1.325	24.8	0.011	6.586E-02	4.551E-03
Cs-136	0.1586	2.969	0.00037	6.740E-03	5.382E-04
Cs-137	1.756	32.87	0.016	8.647E-02	6.074E-03
Na-24	5.408	101.2		7.115E-02	1.117E-02
Cr-51	0.5775	10.81	0.0047	3.626E-02	1.532E-03
Mn-54	0.301	5.634	0.0038	1.992E-02	7.746E-04
Fe-55	0.2259	4.229	0.0072	1.513E-02	5.843E-04
Fe-59	0.05624	1.053	0.0022	3.538E-03	1.421E-04
Co-58	0.8639	16.17	0.0079	5.616E-02	2.256E-03
Co-60	0.1001	1.873	0.014	6.721E-03	2.624E-04
Zn-65	0.09618	1.8		6.193E-03	2.502E-04
Sr-89	0.02619	0.4902	0.000088	1.691E-03	6.753E-05
Sr-90	0.00226	0.0423	0.000013	1.516E-04	5.845E-06
Sr-91	0.08633	1.616		8.539E-04	1.652E-04
Y-91m	0.05313	0.9947		5.010E-04	9.537E-05
Y-91	0.001647	0.03083	0.000084	1.172E-04	3.705E-06
Y-93	0.3921	7.341		3.913E-03	7.310E-04
Zr-95	0.07314	1.369	0.0011	4.704E-03	1.898E-04
Nb-95	0.05311	0.9941	0.0019	3.509E-03	1.318E-04
Mo-99	1.071	20.04	0.00006	3.889E-02	2.664E-03
Tc-99m	0.9414	17.62		3.534E-02	2.056E-03
Ru-103	1.403	26.26	0.00029	9.169E-02	3.666E-03
Ru-106	16.97	317.7	0.0089	1.108E+00	4.410E-02
Te-129m	0.03551	0.6646		2.244E-03	9.210E-05
Te-129	0.3423	6.411		2.288E-03	2.597E-04
Te-131m	0.2189	4.098		4.875E-03	5.036E-04
Te-131	0.07575	1.418		9.200E-04	9.882E-05
Te-132	0.2891	5.412		1.147E-02	7.144E-04
Ba-140	2.392	44.78	0.00091	1.359E-01	6.048E-03
La-140	4.315	80.78		1.946E-01	1.031E-02
Ce-141	0.02804	0.5249	0.00023	1.768E-03	7.200E-05
Ce-143	0.417	7.806		9.902E-03	9.526E-04
Ce-144	0.7542	14.12	0.0039	4.925E-02	1.906E-03
Np-239	0.3604	6.746		1.217E-02	8.781E-04
Total	95.94	1796.34	0.086	3.09	0.17

* Per unit in accordance with 10CFR20, Appendix I.

Table 11.2-5 Total Annual Discharge Liquid Waste Processing System*
Annual Discharge (Ci) After Processing
Total Releases Per Unit (TPC Unit 1 Only)***
(Page 1 of 3)

Column 1	Column 2	Column 3	Column 4	Column 5	Column 6	Column 7	Column 8
CD = Condensate Polishing Demineralizer, MD = Mobile Demineralizer							
	MD DF	CVCS DF	w/o CD process by MD	w/CD processing by MD	no CD processing	no CD process, SGB rel=LLD	no CD process, SGB rel=max
Br-84	1000	50	0.0003696	0.000165534	0.00220833	0.00016533	0.0001653
I-131	1000	50	0.471244	0.0267889	4.475344	0.026344	0.026344
I-132	1000	50	0.055475	0.01319732	0.436355	0.013155	0.013155
I-133	1000	50	0.388058	0.0531932	3.404858	0.052858	0.052858
I-134	1000	50	0.0166222	0.00627256	0.1098622	0.0062622	0.0062622
I-135	1000	50	0.212508	0.047673	1.697508	0.047508	0.047508
Rb-88	1000	2	0.0071992	0.006893007	0.0075057	0.0068927	0.0068927
Cs-134	1000	2	0.095136	0.02934186	0.160996	0.029276	0.029276
Cs-136	1000	2	0.0092913	0.00255804	0.0160313	0.0025513	0.0025513
Cs-137	1000	2	0.126735	0.04035147	0.213205	0.040265	0.040265
Na-24	1000	50	0.089752	0.01867315	0.730102	0.018602	0.018602
Cr-51	1000	50	0.0432857	0.00706196	0.3696257	0.0070257	0.0070257
Mn-54	1000	50	0.0249083	0.0050082	0.20418828	0.00498828	0.0049883
Fe-55	1000	50	0.0232248	0.00810991	0.15939478	0.00809478	0.0080948
Fe-59	1000	50	0.0059574	0.002422938	0.0377994	0.0024194	0.0024194
Co-58	100	50	0.078189	0.0225906	0.583629	0.022029	0.022029
Co-60	1000	50	0.021121	0.014406681	0.08160996	0.01439996	0.0144
Zn-65	1000	50	0.0065754	0.000388573	0.06231238	0.00038238	0.0003824

Table 11.2-5 Total Annual Discharge Liquid Waste Processing System*
Annual Discharge (Ci) After Processing
Total Releases Per Unit (TPC Unit 1 Only)***
(Page 2 of 3)

Column 1	Column 2	Column 3	Column 4	Column 5	Column 6	Column 7	Column 8
CD = Condensate Polishing Demineralizer, MD = Mobile Demineralizer							
	MD DF	CVCS DF	w/o CD process by MD	w/CD processing by MD	no CD processing	no CD process, SGB rel=LLD	no CD process, SGB rel=max
Sr-89	1000	50	0.0018825	0.000193215	0.01710152	0.00019152	0.0001915
Sr-90	1000	50	0.0001736	2.21026E-05	0.00153795	2.1951E-05	2.195E-05
Sr-91	1000	50	0.0011378	0.000284704	0.00882285	0.00028385	0.0002839
Y-91m	1000	50	0.0006694	0.000168895	0.00517839	0.00016839	0.0001684
Y-91	1000	50	0.0002072	9.00858E-05	0.00126197	8.9969E-09	8.997E-05
Y-93	1000	50	0.0051829	0.001273833	0.04039992	0.00126992	0.0012699
Zr-95	1000	50	0.0060943	0.001395024	0.04843032	0.00139032	0.0013903
Nb-95	1000	50	0.0056138	0.002108301	0.03719479	0.00210479	0.0021048
Mo-99	1000	50	0.0430858	0.00423469	0.3930958	0.0041958	0.0041958
Te-99m	1000	50	0.0386898	0.00338514	0.3567498	0.0033498	0.0033498
Ru-103	1000	50	0.0975742	0.00597589	0.9227842	0.0058842	0.0058842
Ru-106	1000	50	1.184324	0.077432	11.156324	0.076324	0.076324
Te-129m	1000	50	0.0023849	0.000143146	0.0225809	0.0001409	0.0001409
Te-129	1000	50	0.0030182	0.000732508	0.02361022	0.00073022	0.0007302
Te-131m	1000	50	0.0056795	0.000809335	0.04955446	0.00080446	0.0008045
Te-131	1000	50	0.0011229	0.00020385	0.00940293	0.00020293	0.0002029
Te-132	1000	50	0.0125817	0.00112321	0.11581174	0.00111174	0.0011117
Ba-140	1000	50	0.1461456	0.0103815	1.3692456	0.0102456	0.0102456

Table 11.2-5 Total Annual Discharge Liquid Waste Processing System*
Annual Discharge (Ci) After Processing
Total Releases Per Unit (TPC Unit 1 Only)***
(Page 3 of 3)

Column 1	Column 2	Column 3	Column 4	Column 5	Column 6	Column 7	Column 8
CD = Condensate Polishing Demineralizer, MD = Mobile Demineralizer							
	MD DF	CVCS DF	w/o CD process by MD	w/CD processing by MD	no CD processing	no CD process, SGB rel=LLD	no CD process, SGB rel=max
La-140	1000	50	0.2108406	0.0164352	1.9622406	0.0162406	0.0162406
Ce-141	1000	50	0.0021085	0.000342306	0.01802054	0.00034054	0.0003405
Ce-143	1000	50	0.0114277	0.00153622	0.10054572	0.00152572	0.0015257
Ce-144	1000	50	0.0560926	0.00689185	0.4993426	0.0068426	0.0068426
Np-239	1000	50	0.0135434	0.00138559	0.12307342	0.00137342	0.0013734
H-3 (TPC)	1	1	1252.80 (3326.4)	1252.80 (3326.4)	1252.80 (3326.4)	1252.80 (3326.4)	1252.80 (3326.4)
unplanned			0.16	0.16	0.16	0.16	0.16
SGBD contribution						0.06	4.402 ****
total (w/o H3) w/unplanned			3.5252328 3.685	0.4416449 0.602	30.0348453 30.195	0.50 0.658	4.84 5.000
total (w/H3) w/unplanned			1256.33 (3329.93) 1256.49 (3330.09)	1253.24 (3326.84) 1253.40 (3327.00)	1282.83 (3356.43) 1283.00 (3356.60)	1253.30 (3326.90) 1253.46 (3327.06)	1257.64 (3331.24) 1257.80 (3331.40)

Table 11.2-5 Total Annual Discharge Liquid Waste Processing System* Annual Discharge (Ci) After Processing Total Releases Per Unit (TPC Unit 1 Only)***

Notes:

* The 0.16 Ci/yr is the unplanned release.

** MD = Mobile Demineralizer (Processes Tanks, CVCS)
DF = Decontamination Factor
CVCS DF = Decontamination Factor of CVCS prior to treatment with MD.
Cond. demin. = condensate demineralizer regeneration waste

*** Total Release = $[\text{Tank} + \frac{\text{CVCS}}{\text{CVCS DF}}]/\text{MD DF} + \text{LHST} = \text{TB} + \text{cond. demin/MD DF}$

**** This calculated value is based on an average of 365 days but does not represent a constraint on the plant since the actual value for individual releases may be greater. However, the total of all yearly releases must remain $\leq$ 5 Ci.

(TPC) The values within the parentheses () represent the tritium values due to the Trtium Production Core.

Column 1: Source term isotopes
Column 2: Decontamination factors for the Mobile Demineralizer
Column 3: CVCS Demineralizer decontamination factors
Column 4: ((A+B/C)/D) + E + F/H + G
Column 5: ((A+B/C)/D) + E + F/H1D + G
Column 6: ((A+B/C)/D) + E + F + G
Column 7: ((A+B/C)/D)+ E + G + I
Column 8: ((A+B/C)/D) + E + G + J
(See below definition for items A thru J

A (Ci/yr) = Reactor Coolant Drain Tank + Tritiated Drain Collector Tank + Floor Drain Collector Tank
B (Ci/yr) = Chemical & Volume Control System (CVCS) Letdown
C = CVCS Demineralizer decontamination factor
D = Mobi"le Demineralizer decontamination factor
E(Ci/yr) = Laundry and Hot Shower Drain Tank
F (Ci/yr) = Condensate Demineralizer flow = (Condensate flow + Steam Generator Blow Down six day collection volume)
G(Ci/yr) = Turbine Building drains
H = Condensate·Demineralizer decontamination factors (2 for Rb-88, Cs-134,-136,-137, & 10 for all other isotopes-ref. 1)
I(Ci/yr) = Steam Generator Blow Down at untreated lower limit of detect ability (LLD) concentration (5E-7 uCi/cc gross Gamma-ref.2)*
J (Ci/yr) = Steam Generator Blow down at ·max allowable untreated concentration of 3.65E-5 uCi/cc

* This is equal to 3E+04 lb/hr*453.59 g/lb*1 cc/g*24 hr/day*365 day/yr*5E-07 uCi/cc*1 E-06 Ci/UCi = 0.06 Ci/yr

Table 11.2-5a
DESIGN (FOR 1% FAILED FUEL) LIQUID RELEASES CONCENTRATION/(EFFLUENT CONCENTRATION LIMIT)

BASELINE DATA WITH NO PROCESSING
(Sheet 1 of 1)

	Exp. Rel. Ci/yr	Des/Exp Ratio	Design Ci/yr	Design uCi/cc	10CFR20 ECL	C/ECL
Br-84	3.696E-04	2.500E+00	9.241E-04	2.320E-11	4.000E-04	5.806E-08
I-131	4.712E-01	5.241E+01	2.470E+01	6.210E-07	1.000E-06	6.207E-01
I-132	5.548E-02	4.000E+00	2.219E-01	5.580E-09	1.000E-04	5.577E-05
I-133	3.881E-01	2.685E+01	1.042E+01	2.620E-07	7.000E-06	3.740E-02
I-134	1.662E-02	1.650E+00	2.740E-02	6.890E-10	4.000E-04	1.722E-06
I-135	2.125E-01	7.910E+00	1.682E+00	4.230E-08	3.000E-05	1.409E-03
Rb-88	7.199E-03	1.814E+01	1.306E-01	3.280E-09	4.000E-04	8.204E-06
Cs-134	9.514E-02	4.060E+01	3.862E+00	9.710E-08	9.000E-07	1.079E-01
Cs-136	9.291E-03	1.652E+02	1.535E+00	3.860E-05	6.000E-06	6.429E-03
Cs-137	1.267E-01	1.532E+02	1.942E+01	4.880E-07	1.000E-06	4.880E-01
Cr-51	4.329E-02	2.900E-01	1.261E-02	3.170E-10	5.000E-04	6.340E-07
Mn-54	2.491E-02	4.700E-01	1.171E-02	2.940E-10	3.000E-05	9.813E-06
Fe-59	5.957E-03	3.480E+00	2.074E-02	5.210E-10	1.000E-05	5.212E-05
Co-58	7.819E-02	5.370E+00	4.200E-01	1.060E-08	2.000E-05	5.278E-04
Co-60	2.112E-02	1.380E+00	2.915E-02	7.330E-10	3.000E-06	2.442E-04
Sr-89	1.883E-03	2.245E+01	4.226E-02	1.060E-09	8.000E-06	1.328E-04
Sr-90	1.736E-04	1.349E+01	2.342E-03	5.890E-11	5.000E-07	1.177E-04
Sr-91	1.138E-03	1.860E+00	2.119E-03	5.330E-11	2.000E-05	2.663E-06
Y-90	0.000E+00	1.567E+01	0.000E+00	0.000E+00	7.000E-06	0.000E+00
Y-91	2.072E-04	1.115E+03	2.310E-01	5.810E-09	8.000E-06	7.258E-04
Zr-95	6.094E-03	1.710E+00	1.040E-02	2.620E-10	2.000E-05	1.308E-05
Nb-95	5.614E-03	2.340E+00	1.313E-02	3.300E-10	3.000E-05	1.100E-05
Mo-99	4.309E-02	7.852E+02	3.383E+01	8.500E-07	2.000E-05	4.251E-02
Te-132	1.258E-02	1.453E+02	1.828E+00	4.590E-08	9.000E-06	5.103E-03
Ba-140	1.461E-01	3.100E-01	4.587E-02	1.150E-09	8.000E-06	1.441E-04
La-140	2.108E-01	6.000E-02	1.198E-02	3.010E-10	9.000E-06	3.345E-05
Ce-144	5.609E-02	8.000E-02	4.530E-03	1.140E-10	3.000E-06	3.795E-05
Pr-144	0.000E+00	8.000E-02	0.000E+00	0.000E+00	6.000E-04	0.000E+00
H-3	1.253E+03	1.000E+00	1.253E+03	3.150E-05	1.000E-03	3.149E-02
H-3 (TPC)	3.326E+03	1.000E+00	3.326E+03	8.360E-05	1.000E-03	8.360E-02
Total						1.3430832
Total (TPC)						1.3957987

Note: The above numbers are based on one unit operation.
This Table is based on column 4 of Table 11.2-5 ratioed up to 1% failed fuel.

Table 11.2-5b
DESIGN (FOR 1% FAILED FUEL) LIQUID RELEASES
CONCENTRATION/(EFFLUENT CONCENTRATION LIMIT)

WASTE PROCESSED BY MOBILE DEMINERALIZERS
(Sheet 1 of 1)

	Exp. Rel. Ci/yr	Des/Exp Ratio	Design Ci/yr	Design uCi/cc	10CFR20 ECL	C/ECL
Br-84	1.655E-04	2.500E+00	4.138E-04	1.040E-11	4.000E-04	2.600E-08
I-131	2.679E-02	5.241E+01	1.404E+00	3.530E-08	1.000E-06	3.529E-02
I-132	1.320E-02	4.000E+00	5.279E-02	1.330E-09	1.000E-04	1.327E-05
I-133	5.319E-02	2.685E+01	1.428E+00	3.590E-08	7.000E-06	5.127E-03
I-134	6.273E-03	1.650E+00	1.034E-02	2.600E-10	4.000E-04	6.496E-07
I-135	4.767E-02	7.910E+00	3.773E-01	9.480E-09	3.000E-05	3.161E-04
Rb-88	6.893E-03	1.814E+01	1.250E-01	3.140E-09	4.000E-04	7.855E-06
Cs-134	2.934E-02	4.060E+01	1.191E+00	2.990E-08	9.000E-07	3.326E-02
Cs-136	2.558E-03	1.652E+02	4.226E-01	1.060E-08	6.000E-06	1.770E-03
Cs-137	4.035E-02	1.532E+02	6.183E+00	1.550E-07	1.000E-06	1.554E-01
Cr-51	7.062E-03	2.900E-01	2.058E-03	5.170E-11	5.000E-04	1.034E-07
Mn-54	5.008E-03	4.700E-01	2.355E-03	5.920E-11	3.000E-05	1.973E-06
Fe-59	2.423E-03	3.480E+00	8.434E-03	2.120E-10	1.000E-05	2.120E-05
Co-58	2.259E-02	5.370E+00	1.214E-01	3.050E-09	2.000E-05	1.525E-04
Co-60	1.441E-02	1.380E+00	1.988E-02	5.000E-10	3.000E-06	1.665E-04
Sr-89	1.932E-04	2.245E+01	4.337E-03	1.090E-10	8.000E-06	1.363E-05
Sr-90	2.210E-05	1.349E+01	2.982E-04	7.490E-12	5.000E-07	1.499E-05
Sr-91	2.847E-04	1.860E+00	5.303E-04	1.330E-11	2.000E-05	6.664E-07
Y-90	0.000E+00	1.587E+01	0.000E+00	0.000E+00	7.000E-06	0.000E+00
Y-91	9.009E-05	1.115E+03	1.005E-01	2.520E-09	8.000E-06	3.156E-04
Zr-95	1.395E-03	1.710E+00	2.382E-03	5.990E-11	2.000E-05	2.993E-06
Nb-95	2.108E-03	2.340E+00	4.931E-03	1.240E-10	3.000E-05	4.131E-06
Mo-99	4.235E-03	7.852E+02	3.325E+00	8.360E-08	2.000E-05	4.178E-03
Te-132	1.123E-03	1.453E+02	1.631E-01	4.100E-09	9.000E-06	4.556E-04
Ba-140	1.038E-02	3.100E-01	3.258E-03	8.190E-11	8.000E-06	1.024E-05
La-140	1.644E-02	6.000E-02	9.338E-04	2.350E-11	9.000E-06	2.608E-06
Ce-144	6.892E-03	8.000E-02	5.566E-04	1.400E-11	3.000E-06	4.663E-06
Pr-144	0.000E+00	8.000E-02	0.000E+00	0.000E+00	6.000E-04	0.000E+00
H-3	1.253E+03	1.000E+00	1.253E+03	3.150E-05	1.000E-03	3.149E-02
H-3 (TPC)	3.326E+03	1.000E+00	3.326E+03	8.360E-05	1.000E-03	8.360E-02
Total						2.680E-01
Total (TPC)						3.201E-01

Note: The above calculations are for 1 unit operation.
This Table is based on column 5 of Table 11.2-5 ratioed up to 1% failed fuel.

Table 11.2-5c
no CD process/ SGBD at LLD/ with 20000 gpm
dilution other
release paths at design limit:

	ANSI Ci/yr	Scaled to 0.06 Ci	des/ansi	Ci/yr	liquid uCi/cc	liquid 10CFR20	C/ECL
Br-84	0.00016533	7.122E-06	2.50	0.00042045	1.06E-11	4.0E-04	2.642E-08
I-131	0.026344	1.551E-02	52.41	1.39622267	3.51E-08	1.0E-06	0.0350911
I-132	0.013155	1.475E-03	4.00	0.05409534	1.36E-09	1.0E-04	1.36E-05
I-133	0.052858	1.169E-02	26.85	1.43069229	3.60E-08	7.0E-06	0.0051368
I-134	0.0062622	3.612E-04	1.65	0.01068347	2.69E-10	4.0E-04	6.713E-07
I-135	0.047508	5.752E-03	7.91	0.38171474	9.59E-09	3.0E-05	0.0003198
Rb-88	0.0068927	1.069E-05	18.14	0.12502534	3.14E-09	4.0E-04	7.856E-06
Cs-134	0.029276	2.296E-03	40.60	1.19076688	2.99E-08	9.0E-07	0.0332526
Cs-136	0.0025513	2.350E-04	165.20	0.42170523	1.06E-08	6.0E-06	0.0017664
Cs-137	0.040265	3.014E-03	153.22	6.17231989	1.55E-07	1.0E-06	0.155128
Cr-51	0.0070257	1.264E-03	0.29	0.00331144	8.32E-11	5.0E-04	1.665E-07
Mn-54	0.00498828	6.944E-04	0.47	0.00304012	7.64E-11	3.0E-05	2.547E-06
Fe-59	0.0024194	1.233E-04	3.48	0.0085453	2.15E-10	1.0E-05	2.148E-05
Co-58	0.022029	1.958E-03	5.37	0.12029542	3.02E-09	2.0E-05	0.0001512
Co-60	0.01439996	2.343E-04	1.38	0.02010522	5.05E-10	3.0E-06	0.0001684
Sr-89	0.000191524	5.895E-05	22.45	0.00435847	1.10E-10	8.0E-06	1.369E-05
Sr-90	0.000021951	5.285E-06	13.49	0.00030145	7.58E-12	5.0E-07	1.515E-05
Sr-91	0.00028385	2.977E-05	1.86	0.00055851	1.40E-11	2.0E-05	7.018E-07
Y-90	0	0.000E+00	15.87	0	0.00E+00	7.0E-06	0
Y-91	8.99686E-05	4.086E-06	1115.17	0.1003347	2.52E-09	8.0E-06	0.0003152
Zr-95	0.00139032	1.640E-04	1.71	0.00253771	6.38E-11	2.0E-05	3.189E-06
Nb-95	0.002104792	1.223E-04	2.34	0.0050454	1.27E-10	3.0E-05	4.227E-06
Mo-99	0.0041958	1.356E-03	785.19	3.29583576	8.28E-08	2.0E-05	0.0041417
Te-132	0.00111174	3.999E-04	145.25	0.16188165	4.07E-09	9.0E-06	0.0004521
Ba-140	0.0102456	4.738E-03	0.31	0.00795345	2.00E-10	8.0E-06	2.499E-05
La-140	0.0162406	6.784E-03	0.06	0.00770681	1.94E-10	9.0E-06	2.152E-05
Ce-144	0.0068426	1.717E-03	0.08	0.00226954	5.70E-11	3.0E-06	1.901E-05
Pr-144	0	0.000E+00	0.08	0	0.00E+00	6.0E-04	0
H-3	1252.80		1	1252.80	3.15E-05	1.0E-03	0.0314864
H-3 (TPC)	3326.40		1	3326.40	8.36E-05	1.0E-03	0.0836019
Total							0.2675585
Total (TPC)							0.319674

Note: This Table is based on column 7 of Table 11.2-5, ratioed up to 1% failed fuel with SGBD at lower limit of detection (LLD) (5E-7 uCi/cc gross gamma) (TPC Unit 1 only).

Table 11.2-5d
no CD process/ SGBD at max Allowable Concentration with 20000 gpm dilution:

	ANSI Ci/yr	Ci/yr scaled to 4.402 Ci	des/ansi	des Ci/yr	liquid des uCi/cc	liquid 10CFR20	C/ECL
Br-84	0.00016533	0.000522532	2.50	0.00093586	2.35E-11	4.0E-04	5.88E-08
I-131	0.026344	1.137908188	52.41	2.51862098	6.33E-08	1.0E-06	0.0633001
I-132	0.013155	0.108240671	4.00	0.16086067	4.04E-09	1.0E-04	4.043E-05
I-133	0.052858	0.857331591	26.85	2.2763383	5.72E-08	7.0E-06	0.008173
I-134	0.0062622	0.02649748	1.65	0.03681979	9.25E-10	4.0E-04	2.313E-06
I-135	0.047508	0.422015849	7.91	0.79797844	2.01E-08	3.0E-05	0.0006685
Rb-88	0.0068927	0.000783926	18.14	0.12579858	3.16E-09	4.0E-04	7.904E-06
Cs-134	0.029276	0.168448265	40.60	1.35691917	3.41E-08	9.0E-07	0.0378925
Cs-136	0.0025513	0.017238708	165.20	0.43870897	1.10E-08	6.0E-06	0.0018377
Cs-137	0.040265	0.221161881	153.22	6.3904673	1.61E-07	1.0E-06	0.1606107
Cr-51	0.0070257	0.09274118	0.29	0.09478855	2.38E-09	5.0E-04	4.765E-06
Mn-54	0.00498828	0.050948822	0.47	0.0532945	1.34E-09	3.0E-05	4.465E-05
Fe-59	0.0024194	0.009049043	3.48	0.017471	4.39E-10	1.0E-05	4.391E-05
Co-58	0.022029	0.143638849	5.37	0.26197645	6.58E-09	2.0E-05	0.0003292
Co-60	0.01439996	0.017190112	1.38	0.03706102	9.31E-10	3.0E-06	0.0003105
Sr-89	0.000191524	0.004325023	22.45	0.00862454	2.17E-10	8.0E-06	2.709E-05
Sr-90	0.000021951	0.000387743	13.49	0.00068391	1.72E-11	5.0E-07	3.438E-05
Sr-91	0.00028385	0.002183996	1.86	0.00271274	6.82E-11	2.0E-05	3.409E-06
Y-90	0	0	15.87	0	0.00E+00	7.0E-06	0
Y-91	8.99686E-05	0.000299759	1115.17	0.10063037	2.53E-09	8.0E-06	0.0003161
Zr-95	0.00139032	0.012031288	1.71	0.01440501	3.62E-10	2.0E-05	1.81E-05
Nb-95	0.002104792	0.00897487	2.34	0.01389794	3.49E-10	3.0E-05	1.164E-05
Mo-99	0.0041958	0.099467857	785.19	3.39394786	8.53E-08	2.0E-05	0.004265
Te-132	0.00111174	0.029336496	145.25	0.19081828	4.80E-09	9.0E-06	0.0005329
Ba-140	0.0102456	0.347587599	0.31	0.35080337	8.82E-09	8.0E-06	0.0011021
La-140	0.0162406	0.497722934	0.06	0.4986457	1.25E-08	9.0E-06	0.0013925
Ce-144	0.0068426	0.125965337	0.08	0.12651795	3.18E-09	3.0E-06	0.0010599
Pr-144	0	0	0.08	0	0.00E+00	6.0E-04	0
H-3	1252.80		1	1252.80	3.15E-05	1.0E-03	0.0314864
H-3 (TPC)	3326.40		1	3326.40	8.36E-05	1.0E-03	0.0836019
Total							0.3135157
Total (TPC)							0.3656312

Note: This Table is based on column 8 of Table 11.2-5, ratioed up to 1% failed fuel with SGBD at maximum allowable concentration of 3.65E-5 uCi/cc gross gamma) (TPC Unit 1 only).

Table 11.2-6 Tennessee River Reaches Within 50 Mile Radius Downstream of WBN

Name	Beginning TRM	Ending TRM	Size (acres)	Recreation visits/y
Chickamauga Lake below WBN	528.0	510.0[1]	4799	120,986
Chickamauga Lake above Sequoyah Nuclear Plant	510.0[1]	484.0	22101	1,297,880
Chickamauga Lake below Sequoyah Nuclear Plant	484.0	471.0	9889	7,421,905
Nickajack Lake (Part 1)	471.0	460.0	1799	284,000

TRM - Tennessee River Mile

[1]100% Mixing Point

Public Water Supplies Within 50 Mile Radius Downstream of WBN		
Name	**TRM**	**Estimated 2040 Population**
Dayton, TN	504	19,170
East Side Utility, TN	473.0	49,700
Chattanooga, TN	465	237,048
Soddy-Daisy/Falling Water Utility District, TN	487	11,452

Table 11.2-7 Watts Bar Nuclear Plant
Doses From Liquid Effluents For Year 2040

Individual Dose (mrem)							
Adult							
Total Body	Bone	GI Tract	Thyroid	Liver	Kidney	Lung	Skin
0.72	0.56	0.132	0.88	0.96	0.352	0.136	0.031
Teen							
Total Body	Bone	GI Tract	Thyroid	Liver	Kidney	Lung	Skin
0.44	0.60	0.104	0.80	1.00	0.356	0.152	0.031
Child							
Total Body	Bone	GI Tract	Thyroid	Liver	Kidney	Lung	Skin
0.188	0.76	0.06	0.92	0.88	0.312	0.128	0.031
Infant							
Total Body	Bone	GI Tract	Thyroid	Liver	Kidney	Lung	Skin
0.032	0.036	0.033	0.264	0.036	0.034	0.032	0.031
Population Dose (Person-rem)							
Total Body	Bone	GI Tract	Thyroid	Liver	Kidney	Lung	Skin
1.619	1.761	1.420	15.336	2.130	1.392	1.037	0.315

THIS PAGE INTENTIONALLY BLANK

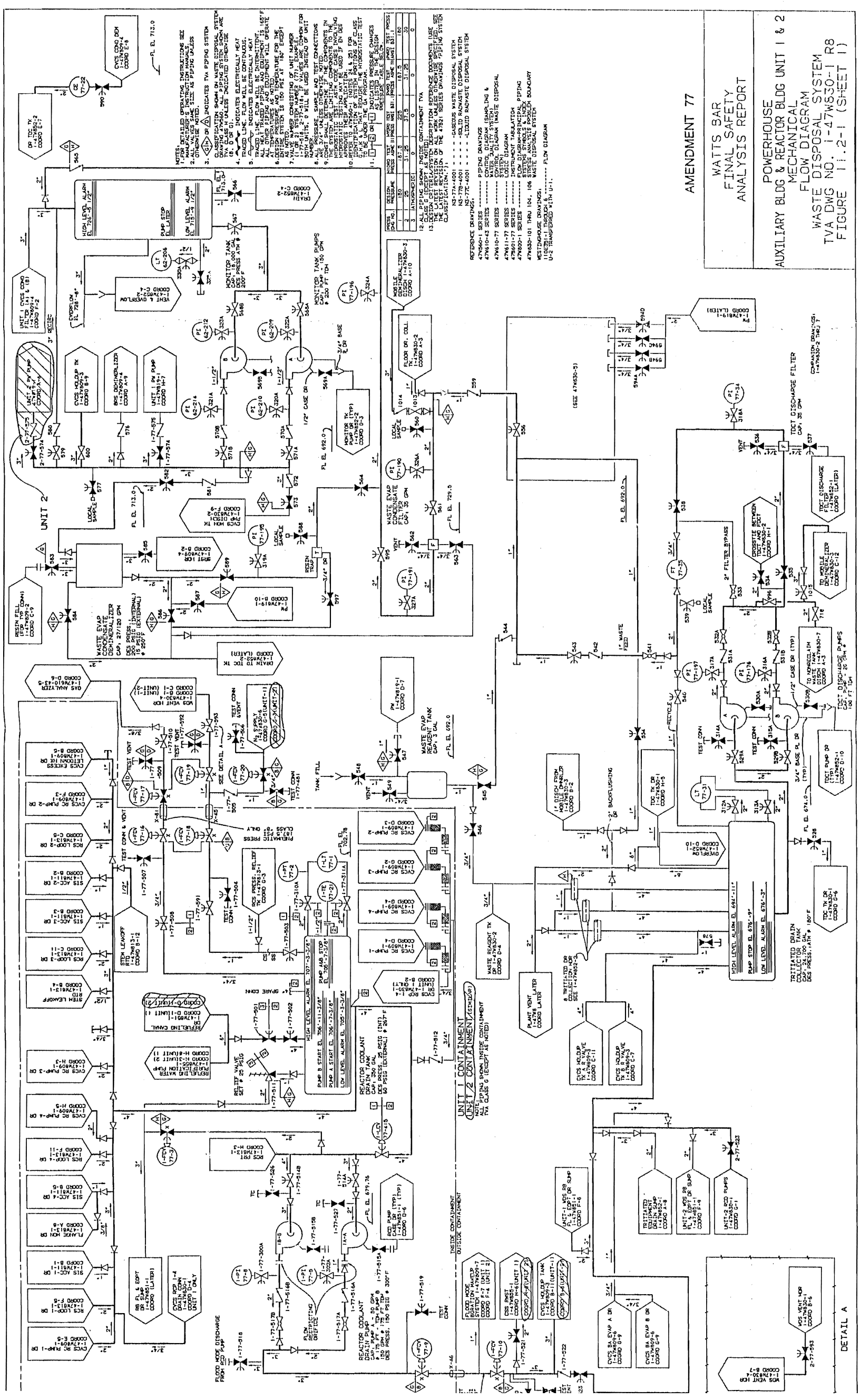

Figure 11.2-1 Powerhouse Auxiliary Bldg & Reactor Bldg Units 1 & 2 Mechanical Flow Diagram Waste Disposal System (Sheet 1)

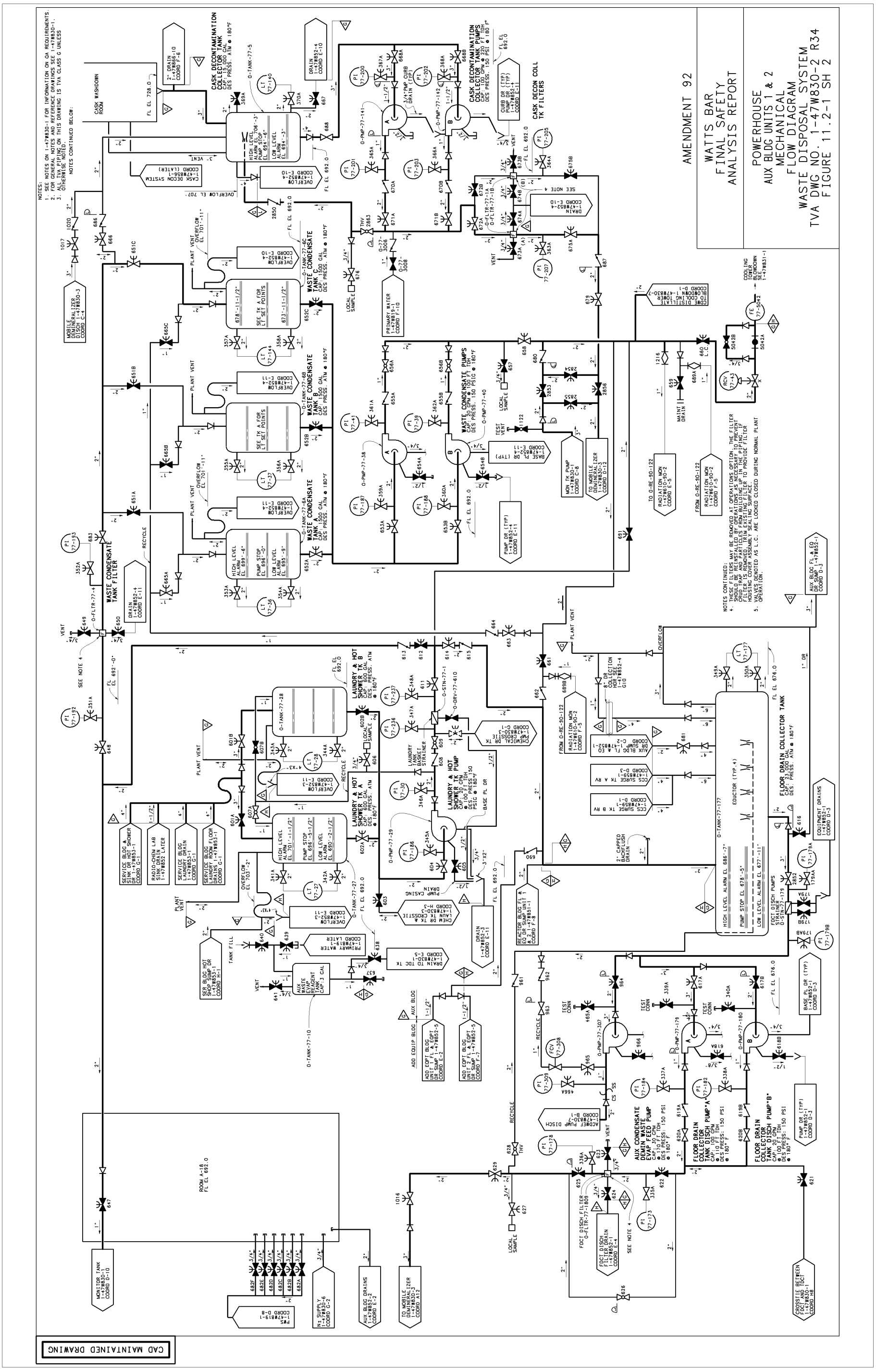

Figure 11.2-1 Powerhouse Aux Bldg Units 1 & 2 Mechanical Flow Diagram Waste Disposal System (Sheet 2)

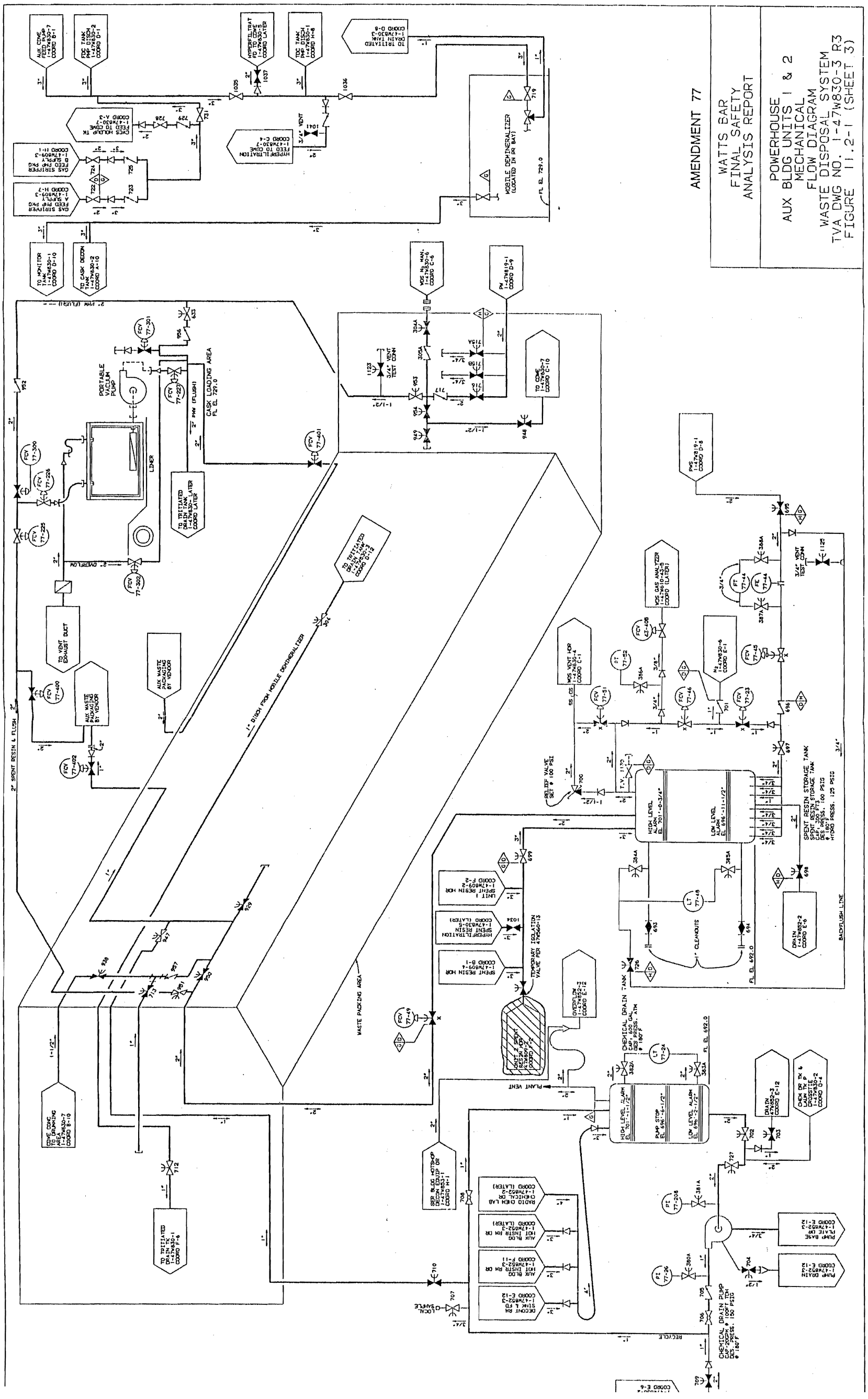

Figure 11.2-1 Powerhouse Aux Bldg Units 1 & 2 Mechanical Flow Diagram Waste Disposal System (Sheet 3)

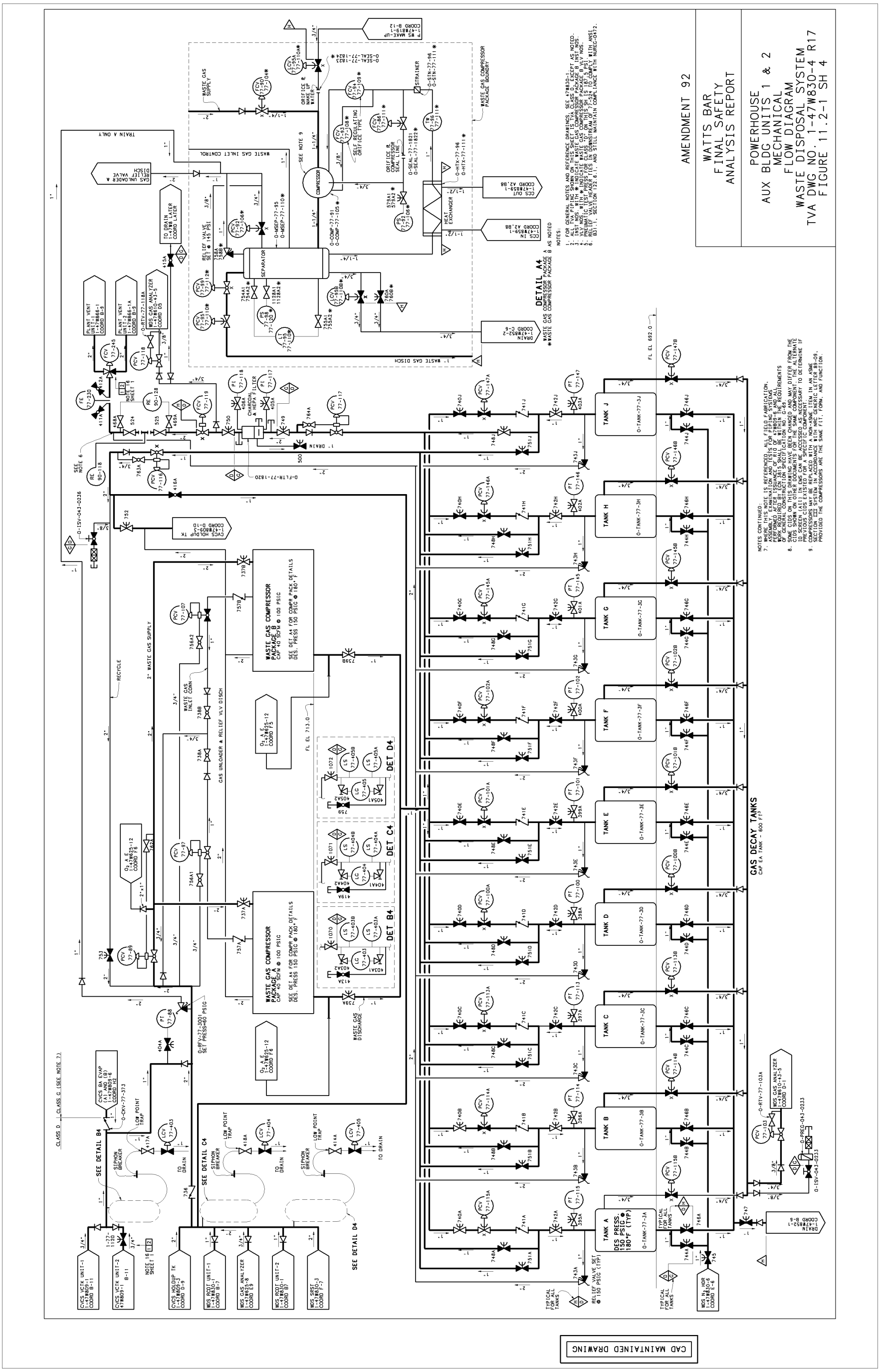

Figure 11.2-1 Powerhouse Aux Bldg Units 1 & 2 Mechanical Flow Diagram Waste Disposal System (Sheet 4)

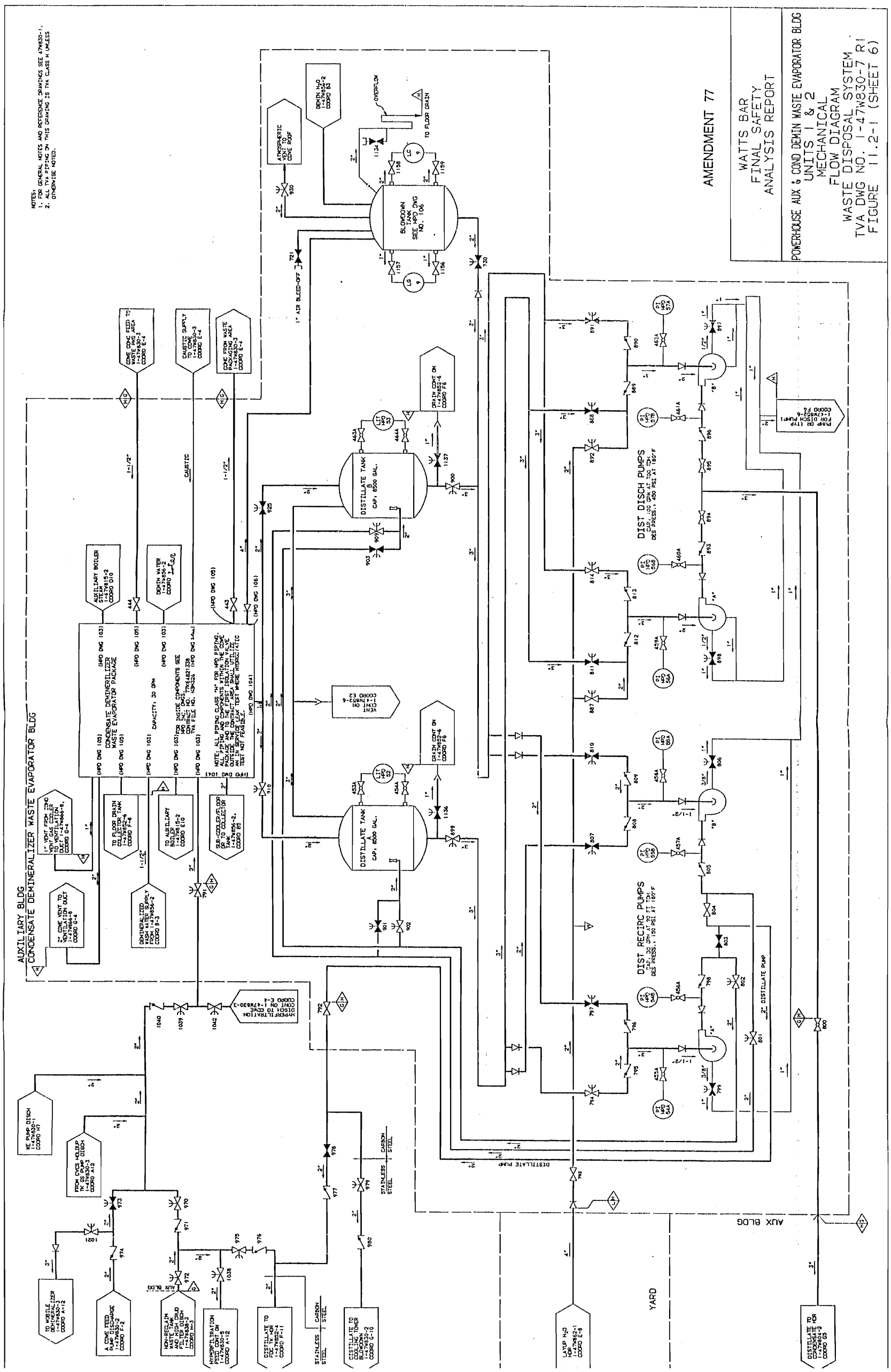

Figure 11.2-1 Powerhouse Auxiliary & Cond Demin Waste Evaporator Bldg Units 1 & 2 Mechanical Flow Diagram Waste Disposal System (Sheet 6)

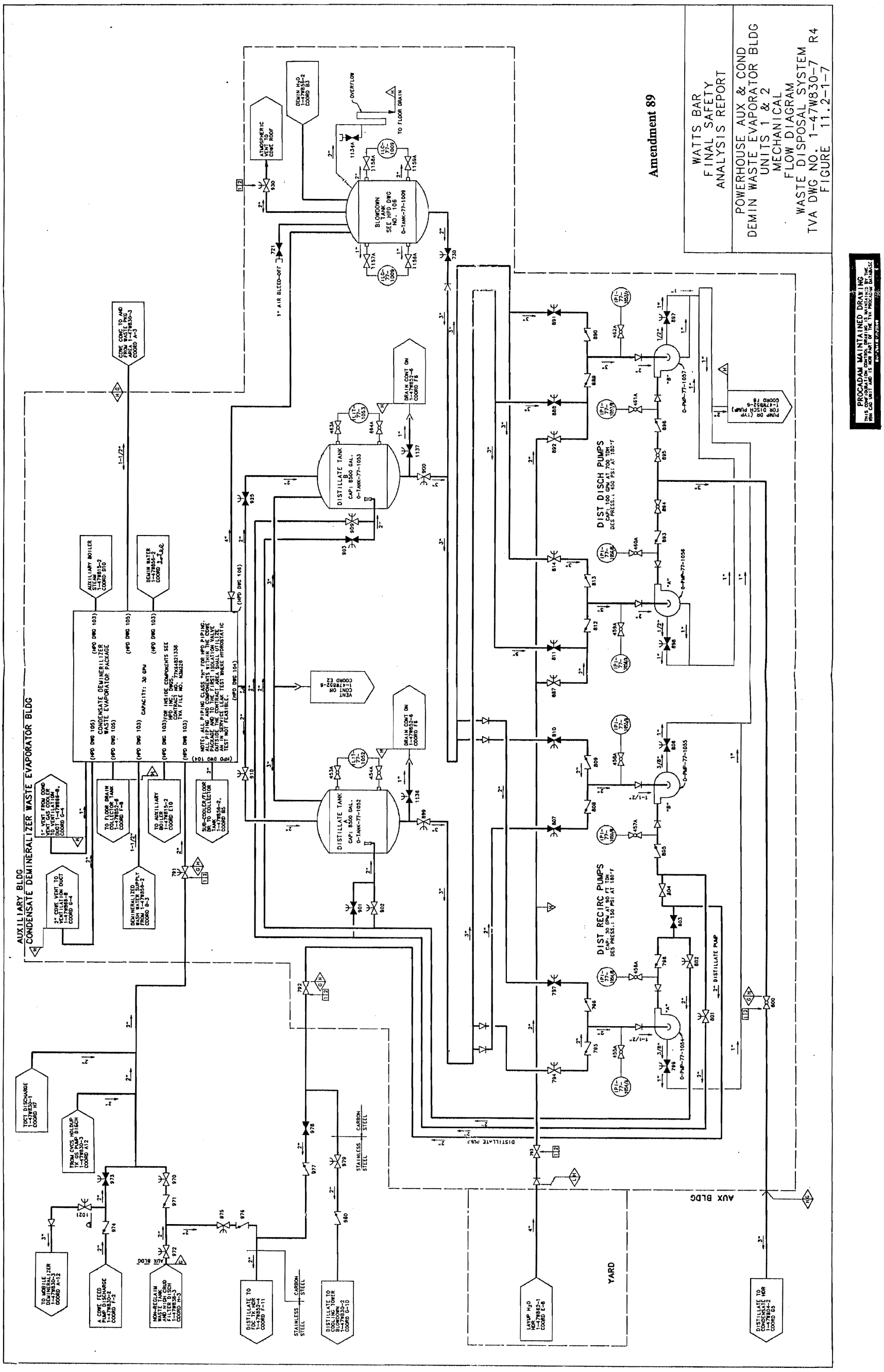

Figure 11.2-1 Powerhouse Aux & Cond Demineralizer Waste Evaporator Bldg Units 1 & 2 Mechanical Flow Diagram Waste Disposal System (Sheet 7)

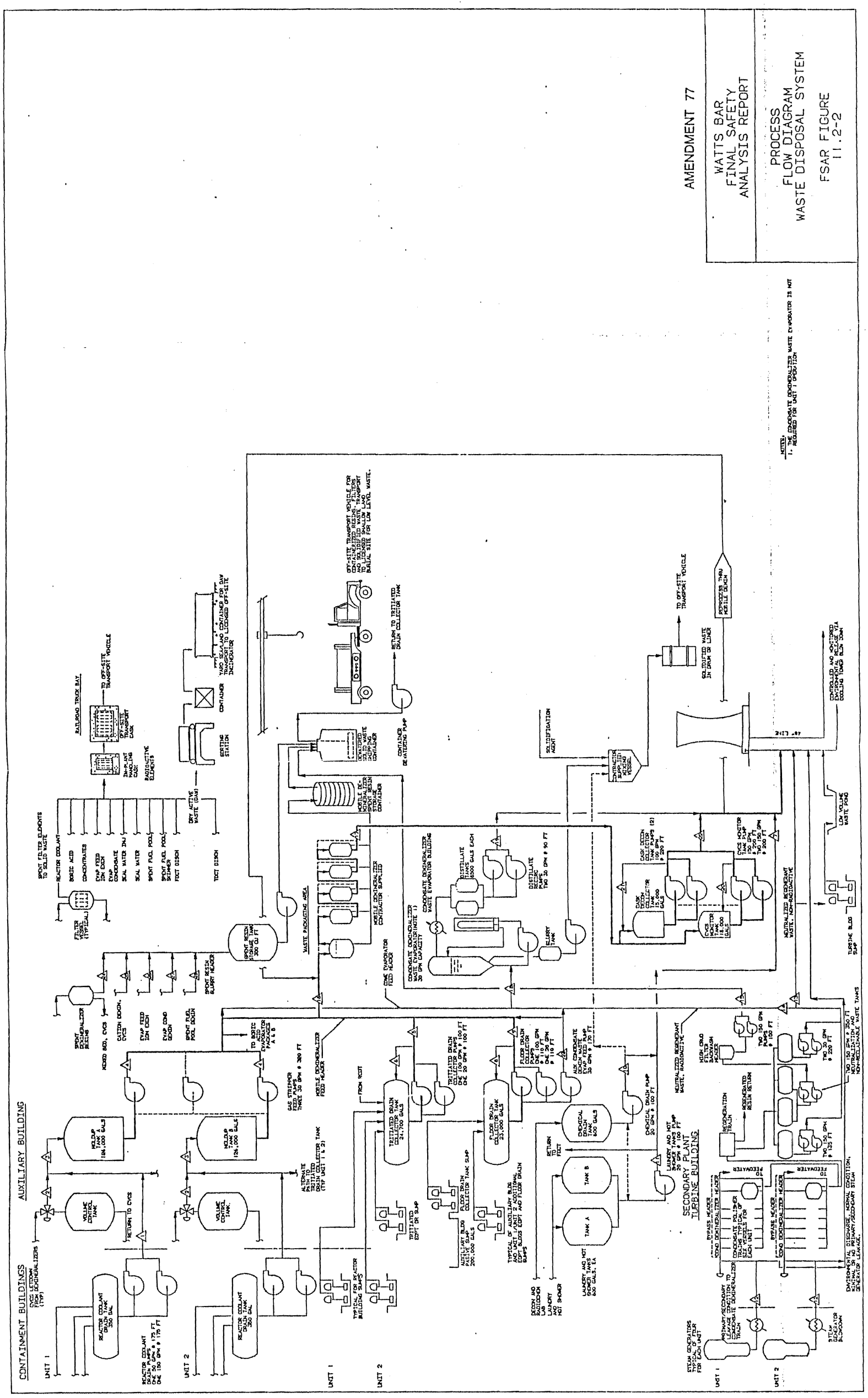

Figure 11.2-2 Process Flow Diagram Waste Disposal System

THIS PAGE INTENTIONALLY BLANK

11.3 GASEOUS WASTE SYSTEMS

11.3.1 Design Bases

The Gaseous Waste Processing System (GWPS) is designed to remove fission product gases from the Nuclear Steam Supply System and to permit operation with periodic discharges of small quantities of fission gases through the monitored plant vent. This is accomplished by internal recirculation of radioactive gases and holdup in the nine waste gas decay tanks to reduce the concentration of radioisotopes in the released gases.

The plant gaseous effluent releases during normal operation of the plant are limited at the site boundary not to exceed 10 CFR 50 Appendix I and 40 CFR 190 limits as specified in the Offsite Dose Calculation Manual (ODCM).

Although plant operating procedures, equipment inspection, and preventive maintenance are performed during plant operations to minimize equipment malfunction, overall radioactive release limits have been established as a basis for controlling plant discharges during operation with the occurrence of a combination of equipment faults. A combination of equipment faults which include operation with fuel defects and failure of up to two TPBARs (Unit 1 only) in combination with such occurrences as:

(1) Steam generator tube leaks.

(2) Leakage in Liquid Waste Processing System.

(3) Leakage of Gaseous Waste Processing System.

(4) Leakage in Reactor Coolant System equipment.

(5) Leakage in auxiliary system equipment.

The radioactive releases from the plant resulting from equipment faults of moderate frequency are within 10 CFR 50 Appendix I and 40 CFR 190 limits as specified in the ODCM.

11.3.2 SYSTEM DESCRIPTIONS

The GWPS consists of two waste gas compressor packages, nine waste gas decay tanks, auxiliary services, and the associated piping, valves and instrumentation. The equipment serves both units. The system is shown on the Process Flow and Electrical Control Diagrams, Figure 11.3-1 and Figure 11.3-2.

Table 11.3-4 gives process parameters and system activities for key locations in the system.

Table 11.3-5 gives the expected annual gaseous releases from the GWPS.

The bases used for estimating the system activities and gaseous releases are given in Table 11.3-3.

Gaseous wastes are received from the following: degassing of the reactor coolant and purging of the volume control tank prior to a cold shutdown, displacing of cover gases caused by liquid accumulation in the tanks connected to the vent header, purging of some equipment, sampling and gas analyzer operation.

Auxiliary Services

The auxiliary services portion of the GWPS consists of two automatic gas analyzers and its instrumentation, valves, and tubing, a nitrogen and a hydrogen supply manifold and the necessary instrumentation, valves, and piping.

One automatic sequential gas analyzer determines the quantity of oxygen in the gas space of the volume control tank, pressurizer relief tank, holdup tanks, gas decay tanks, reactor coolant drain tank, and spent resin storage tank and provides a local and main control room (MCR) alarm on 2% oxygen concentration (hi-alarm), and 4% concentration (hi-hi alarm). Hydrogen (H_2) concentration may be monitored by the sequential analyzer. However, the H_2 concentration is assumed to exceed the lower flammability limit. Therefore, operator action for the sequential analyzer is based primarily on the O_2 concentration. If the H_2 concentration is low (i.e, less than or equal to 4%), this may be considered a mitigating factor when determining contingency actions for high or high-high O_2 concentration. A second oxygen monitor is installed to continuously sample the discharge of the operating gas compressor. This monitor sounds an alarm at 2% oxygen (hi-alarm) and 4% oxygen (hi-hi alarm) in the MCR. Operator action is relied upon to prevent the formation of a combustible gas mixture in the GWPS. This is accomplished by reducing oxygen concentrations on a hi-alarm and suspending additions to the Waste Gas System and reducing oxygen concentrations on a hi-hi alarm. For the sequential analyzer on a hi-alarm, the operator determines the source of the high oxygen and reduces the oxygen concentration. For a sequential analyzer hi-hi alarm, the operator minimizes an increase in vent header pressure, suspends additions to the waste gas system, and reduces oxygen concentration.

As protection against an uncontrolled release of radioactive materials from the GWPS, grab sampling and analysis are performed when either the waste disposal system waste gas sequential or continuous oxygen analyzer is inoperable. Grab sampling and analysis are performed for the continuous analyzer only during periods of compressor operation for batch transfers.

The nitrogen and hydrogen supply packages are designed to provide a supply of gas to the Nuclear Steam Supply System. Two headers are provided for each package: one for operation and one for backup. The pressure regulator (nitrogen only) in the backup header is set slightly lower than that in the operating header. When the operating header is exhausted, its discharge pressure falls below the set pressure of the backup header, which comes into service automatically to ensure a continuous supply of nitrogen gas. An alarm alerts the operator that one header (nitrogen or hydrogen) is exhausted. A two header (low and high pressure) liquid nitrogen (N_2) supply is provided to supplement the N_2 package.

Nitrogen is supplied for the following: spent resin storage tank, reactor coolant drain tank, pressurizer relief tank, volume control tank, waste gas decay tanks, and Chemical and Volume System (CVCS) holdup tanks. In addition, there is a truck fill connection in the nitrogen supply header for the direct filling of the safety injection system accumulators. Makeup nitrogen for the accumulators is supplied from the package. Hydrogen is supplied for the volume control tank.

The design and material of valves and manifolds are the same as for the main GWPS.

11.3.3 SYSTEM DESIGN

11.3.3.1 Component Design

The GWPS equipment parameters are given in Table 11.3-1. For further information on design codes and safety classes see Section 3.2.

Waste Gas Compressors

The two waste gas compressors are provided for removal of gases discharging to the vent header. One unit is supplied for normal operation and is capable of handling the gas from a holdup tank which is receiving letdown flow at the maximum rate. The second unit is provided for backup during peak load conditions, such as when degassing the reactor coolant or for service when the first unit is down for maintenance. Operation of the backup unit can be controlled manually or automatically by vent header pressure. The compressors are of the water sealed centrifugal type and are provided with mechanical seals to minimize leakage. Construction is of cast iron external and bronze internals with a stainless steel shaft.

Gas Decay Tanks

Nine tanks are provided to hold radioactive waste gases for decay or contain nitrogen gas as and inert. This arrangement is adequate for a plant operating with one percent fuel defects. Nine tanks are provided so that during normal operation, a minimum of 60 days are available for decay. The 60 days define the design characteristics, not an operational parameter.

Valves

The valves handling gases are selected to minimize leakage.

Piping

The piping for gaseous waste is typically carbon steel. All piping joints are welded except where flanged connections are necessary for maintenance.

11.3.3.2 Instrumentation Design

The system instrumentation is shown on Flow Diagrams and Electrical Control Diagrams, Figures 11.3-1 and 11.3-2. Adequate instrumentation is provided to monitor appropriate system parameters.

The instrumentation readout is located mainly on the Waste Processing System panel in the Auxiliary Building. Some instruments have local readout at the equipment location.

Most alarms are shown separately on the WPS panel and further relayed to one common WPS annunciator on the waste disposal panel (0-L-2). An oxygen analyzer alarm on the waste gas compressor discharge is in the main control room. The continuous oxygen analyzer on the waste gas compressor is provided to alert the operator that oxygen is present, and to stop processing and manually switch to the standby gas decay tank.

An automatic sequential gas analyzer is provided to monitor oxygen concentrations. The analyzer records the oxygen concentrations and alarms at high oxygen level. The instrumentation diagram and sample collection points are shown in Figure 11.3-2. Hydrogen (H_2) concentration may be monitored by the sequential analyzer. However, the H_2 concentration is assumed to exceed the lower flammability limit so that only O_2 concentration is used to determine the need for operation action.

11.3.4 Operating Procedure

Equipment installed to reduce radioactive effluents to the minimum practicable level will be maintained in good operating order and will be operated to the maximum extent practicable. In order to assure that these conditions are met, administrative controls are exercised on overall operation of the system; preventive maintenance is utilized to maintain equipment in optimum condition; and experience available from similar plants is used in planning for operation at Watts Bar Nuclear Plant.

Administrative controls are exercised through the use of instructions covering such areas as valve alignment for various operations, equipment operating instructions, and other instructions pertinent to the proper operation of the processing equipment. Discharge permit forms are utilized to assure proper procedures are followed and in assuring proper valve alignments and other operating conditions before a release. These forms are signed and verified by those personnel performing the analysis and approving the release.

Preventive maintenance is carried out on all equipment as described in the plant's maintenance program.

Gaseous wastes are received from degassing of the reactor coolant, purging of VCT, and nitrogen from the closed cover gas system. The components connected to the vent header are limited to those which normally contain no air or aerated liquids to prevent formation of a combustible mixture of hydrogen and oxygen.

Waste gases discharged to the vent header are pumped to a waste gas decay tank by one of the two waste gas compressors.

The standby compressor is started automatically when high pressure occurs in the vent header. The standby compressor can be started manually. The compressors may also be used to transfer gas between gas decay tanks.

To compress gas into the gas decay tanks, the operator selects two tanks at the auxiliary control panel, one to receive gas, and one for standby. When the tank in service is pressurized to 100 psig, flow is automatically switched to the standby tank and an alarm alerts the operator to select a new standby tank.

The discharge of the running waste gas compressor is sampled automatically by the continuous gas analyzer as it is being transferred to the tank being filled and an alarm alerts the operator to a high oxygen content. On high oxygen signal, the tank must be isolated and operator action is required to direct flow to the standby tank and to select a new standby tank.

If it should become necessary to transfer gas from one decay tank to another, the tank to be emptied is discharged to the holdup tank return line. The tank to receive gas is opened to the inlet header and the return line pressure regulator setpoint is increased above setpoint. The return line isolation valve is closed and the crossover between the return line and the compressor suction is opened. With this arrangement, gas is transferred by the compressor which is in service.

As the Chemical and Volume Control System holdup tanks' liquid is withdrawn, gas from the gas decay tanks is returned to the holdup tanks. The gas decay tank selected to supply the returning cover gas is attached to the return header from the auxiliary control board by manually opening the appropriate valve.

To maximize residence time for decay in the decay tanks, the last tank filled should be the first tank attached to the header. A backup supply of gas for the holdup tanks is provided by the nitrogen header.

Before a gas decay tank is discharged to the atmosphere via the plant vent, a gas sample is taken to determine activity concentration of the gas and total activity inventory in the tank. Total tank activity inventory is determined from the activity concentration and pressure in the tank.

To release the gas, the appropriate local manual stop valve is opened to the plant vent and the gas discharge modulating valve is opened at the auxiliary control panel. The plant vent activity level is also indicated on the panel to aid in setting the valve properly. If there should be a high activity level in the vent during release, the modulating valve closes.

Refueling

When preparing the plant for a cold shutdown prior to re-fueling, it is necessary to degas the reactor coolant to reduce the hydrogen concentration to a desired level of 5 cc/kg and a desired activity concentration of Xe-133 to 1 µCi/cc. At the start of the de-gassing operation, the volume control tank gas space contains H_2 and traces of fission gases. This atmosphere is replaced with nitrogen by raising and lowering the tank liquid level while venting and introducing nitrogen, until the above hydrogen and Xe-133 desired limits above are met.

Gas evolved from the volume control tank during this operation is pumped by the waste-gas compressors to the gas-decay tanks.

Operation of the gaseous side of the GWPS is the same during the actual refueling operation as during normal operation.

Auxiliary Services

During normal operation the GWPS supplies nitrogen and hydrogen from standard cylinders to primary plant components. Two headers are provided, one for operation and one for backup. The pressure regulator in the nitrogen operating header is set above the backup header pressure and an alarm alerts the operator when this pressure falls below setpoint. The standby header for nitrogen comes into service automatically to ensure a continuous supply of gas. After the exhausted header has been replaced, the operator manually sets the operating pressure and the backup pressure to their respective set points. When the supply header pressure for the hydrogen falls below the setpoint, an alarm alerts the operator to manually select the backup. A two header (low and high) liquid nitrogen (N_2) supply is provided to supplement the N_2 cylinders and headers. This liquid N_2 supply is normally used to maintain a charge on both the cylinders and headers. If the liquid supply is depleted, then the cylinders supply the N_2 for the headers.

11.3.5 Performance Tests

Initial performance tests are performed to verify the operability of the components, instrumentation and control equipment.

During reactor operation the system is used at all times and hence is monitored.

11.3.6 Deleted by Amendment 77

11.3.7 Radioactive Releases

11.3.7.1 NRC Requirements

The following documents have been issued by the NRC to provide regulations and guidelines for radioactive releases:

(1) 10 CFR 20, Standards for Protection Against Radiation

(2) 10 CFR 50, Licensing of Production and Utilization Facilities

The total plant gaseous releases meet these regulations by providing assurance that the exposures to individuals in unrestricted areas are as low as reasonably achievable during normal plant operation and during anticipated operational occurrences.

11.3.7.2 Westinghouse PWR Experience Releases

A survey has been performed of gaseous discharges from different Westinghouse PWR plants for one calendar year. The results are presented in Table 11.3-2.

11.3.7.3 Expected Gaseous Waste Processing System Releases

Gaseous wastes consist of nitrogen and hydrogen gases purged from the Chemical Volume and Control System volume control tank when degassing the reactor coolant, and from the closed gas blanketing system. The gas decay tank capacity permits at least 60 days decay for waste gases before discharge during normal operation.

The quantities and isotopic concentration of gases discharged from the GWPS have been estimated. The analysis is based on input sources to the GWPS per NUREG–0017, modified to reflect WBN plant-specific parameters.

The expected gaseous releases in curies per year per reactor unit are given in Table 11.3-5.

11.3.7.4 Releases from Ventilation Systems

A detailed review of the entire plant has been made to ascertain those items that could possibly contribute to airborne radioactive releases.

During normal plant operations, airborne noble gases and/or iodines can originate from reactor coolant leakage, equipment drains, venting and sampling, secondary side leakage, condenser air ejector and gland seal condenser exhausts, and GWPS leakage.

The assumptions used to estimate the annual quantity of radioactive gaseous effluents are given in Table 11.3-6. These assumptions are in accordance with NUREG-0017. The noble gases and iodines discharged from the various sources are entered in Table 11.3-10.

11.3.7.5 Estimated Total Releases

The estimated releases listed in Table 11.3-7c have been used in calculating the site boundary doses as shown in Table 11.3-10. Table 11.3-7a is the expected gases released for 1% failed fuel with containment purge. Table 11.3-7 is the annual releases with purge air filters. Table 11.3-7b is the expected gases released for 1% failed fuel with continuous filtered containment vent, and Table 11.3-7c for approximately 1/8% failed fuel with continuous filtered containment vent.

The dose calculations, based on the estimated total plant releases, show that the releases are in accordance with the design objectives in Section 11.3.1 and meet the regulations as outlined in Section 11.3.7.1. Further, the total plant releases are within the ODCM limits.

11.3.8 Release Points

Gaseous radioactive wastes are released to the atmosphere through vents located on the Shield Building, Auxiliary Building, Turbine Building, and Service Building. A brief description, including function and location of each type vent, is presented below.

Shield Building Vent

Waste gases from containment purge and the waste gas decay tanks are discharged to the environment through a Shield Building vent. Each Shield Building has one vent. The vent is of rectangular cross section (dimension - 2 feet by 7 feet 6 inches) and discharges approximately 130 feet above ground level. The location of the Reactor Building vents is shown in the equipment layout drawings, Figure 1.2-1. The location of the Shield Building in relation to the site is shown on the main plant general plan, Figure 2.1-5. All releases from the Shield Building vent except containment purge air exhaust monitor discharges are passed through HEPA filters and charcoal adsorbers prior to release. The effluent discharge rate through the vent is variable; occasionally, during containment purge, the rate may approach the value which is listed in Figure 9.4-28. The flow path for waste gases exhausted through the vent from the waste gas decay tanks is shown in Figure 11.3-1.

Auxiliary Building Vent

Waste gases in the Auxiliary Building are discharged through the Auxiliary Building exhaust vent. In addition, containment atmosphere is continuously vented, during normal operation for pressure control, into the annulus after it is filtered through HEPA and charcoal filters, and subsequently, discharged into the Auxiliary Building exhaust vent. The vent is of the chimney type having a rectangular cross section of 10 by 30 feet. The top of the vent is located atop the Auxiliary Building and discharges approximately 106 feet above grade. Under normal operating conditions, gases are continuously discharged through the vent. Effluent flow rates can be near 224,000 cfm when two Auxiliary Building general exhaust fans and one fuel-handling area exhaust fan are operating at full capacity. Under accident conditions, the Auxiliary Building is isolated, and the Auxiliary Building gas treatment system (ABGTS) is used to treat gaseous effluents. When in service, the ABGTS discharges to the Shield Building exhaust vent. The location of the Auxiliary Building exhaust vent is shown in the equipment layout diagram, Figure 1.2-1. The Auxiliary Building is shown on the main plant general plan, Figure 2.1-5.

Turbine Building Vents

Ventilation air is exhausted from the Turbine Building through the Turbine Building vents. There are eighteen vents at the 755-foot level and twenty vents at the 824-foot level (roof level). The effluent flow rates vary for each type of vent. Generally, the normal flow rates through a typical vent at the 755-foot level is 22,888 cfm and the flow rates through typical vent at the 824-foot level is 28,500 cfm. The general arrangement of vents on the Turbine Building is shown on Figure 1.2-1. The turbine building is shown on the main plant general plan, Figure 2.1-5.

Condenser Vacuum Exhaust Vent

Gaseous wastes from the condenser are discharged through the condenser vacuum exhaust vent. The vent, which is a 12-inch diameter pipe, discharges at approximately the 760-foot level. Under normal operating conditions the discharge flow rate will typically be less than 45 cfm.

Service Building Vent

Radiologically monitored potentially radioactive waste gases from the radiochemical laboratory and the titration room are exhausted through HEPA filters via a common duct which discharges to the common Service Building roof exhaust plenum. Exhaust air from the general area discharges to the common Service Building roof exhaust plenum. Separate vents from the common roof exhaust plenum discharge to atmosphere approximately 24 feet above grade. The Service Building is shown on the site plot plan, Figure 2.1-5.

11.3.9 Atmospheric Dilution

Calculations of atmospheric transport, dispersion, and ground deposition are based on the straight-line airflow model discussed in NRC Regulatory Guide 1.111 (Revision 1, July 1977). Releases are assumed to be continuous. Releases known to be periodic, e.g., those during containment purging and waste gas decay tank venting, are treated as continuous releases.

Releases from the Shield Building, Turbine Building (TB), and Auxiliary Building (AB) vents are treated as ground level. The ground level joint frequency distribution (JFD) is given in Section 2.3. Air concentrations and deposition rates were calculated considering radioactive decay and buildup during transit. Plume depletion was calculated using the figures provided in Regulatory Guide 1.111.

Estimates of normalized concentrations (X/Q) and normalized deposition rates (D/Q) for gaseous releases at points where potential dose pathways exist are listed in Table 11.3-8.

11.3.10 Estimated Doses from Radionuclides in Gaseous Effluents

Individuals are exposed to gaseous effluents via the following pathways: (1) external radiation from radioactivity in the air and on the ground; (2) inhalation; and (3) ingestion of beef, vegetables, and milk. No other additional exposure pathway has been identified which would contribute 10% or more to either individual or population doses.

11.3.10.1 Assumptions and Calculational Methods

External air exposures are evaluated at points of potential maximum exposure (i.e., points at the unrestricted area boundary). External skin and total body exposures are evaluated at nearby residences. The dose to the critical organ from radioiodines, tritium (Unit 1 only) and particulates is calculated for real pathways existing at the site during a land use survey conducted in 1994.

To evaluate the potential critical organ dose, milk animals and nearest gardens were identified by a detailed survey within five miles of the plant (Table 11.3-8). Information on grazing seasons and feeding regimes are reflected in the feeding factor. The feeding factor is the fraction of the year an animal grazes on pasture. During the 1994 land use survey, there was one milk cow location identified in which information regarding the feeding regime for the animals, and the ages of onsite consumers of the milk could not be established. Because no specific information is known, it is conservatively assumed that the feeding factor for that location is equal to the worst-

case feeding factor identified during the 1994 land use census for any real cow location (i.e., 70% pasture feeding) and that all four age groups are present. Since specific data on beef animals were not available, the nearest beef animal was assumed to be at the point of maximum offsite exposure. Milk ingestion is the critical pathway.

TVA assumes that enough fresh vegetables are produced at each residence to supply annual consumption by all members of that household. TVA assumes that enough meat is produced in each sector annulus to supply the needs of that region. Watts Bar projected population distribution for the year 2040 is given in Table 11.3-9.

Doses are calculated using the dose factors and methodology contained in NRC Regulatory Guide 1.109 with certain exceptions as follows:

(1) Inhalation doses are based on the average individuals inhalation rates found in ICRP Publication 23 of 1,400; 5,500; 8,000; and 8,100 m^3/year for infant, child, teen, and adult, respectively.

(2) The milk ingestion pathway has been modeled to include specific information on grazing periods for milk animals obtained from a detailed farm survey. A feeding factor (FF) has been defined as that fraction of total feed intake a dairy animal consumes that is from fresh forage. The remaining portion of feed (1-FF) is assumed to be from stored feed. Doses calculated from milk produced by animals consuming fresh forage are multiplied by these factors. Concentrations of radioactivity in stored feed are adjusted to reflect radioactive decay during the maximum assumed storage period of 180 days by the factor:

$$\frac{1}{180}\int_0^{180} \exp(-\lambda_i t)dt = \frac{1-\exp(-\lambda_i 180)}{180\lambda_i}$$

This factor replaces the factor exp $(-\lambda_i t_h)$ in equation C-10 of Regulatory Guide 1.109.

(3) The stored vegetable and beef ingestion pathways have been modeled to reflect more accurately the actual dietary characteristics of individuals. For stored vegetables the assumption is made that home grown stored vegetables are consumed when fresh vegetables are not available, i.e., during the 9 months of fall, winter, and spring. Rather than use a constant

storage period of 60 days, radioactive decay is accounted for explicitly during the 275-day consumption period. The radioactive decay correction is calculated by:

$$\frac{1}{275}\int_{0}^{275} \exp(-\lambda_i t)dt = \frac{1-\exp(-\lambda_i 275)}{275\lambda_i}$$

This replaces the term exp $(-\lambda_i t_h)$ in Equation C-5 of Regulatory Guide 1.109.

(4) The beef consumption pathways can be divided into either commercial sales or home use pathways. Dose calculations are made for individuals consuming meat produced for home use. The normal processing route is for an individual to slaughter the beef animal, package and freeze the meat, and then consume the meat during the next 3-month period. Radioactive decay is calculated during the 3-month period by

$$\frac{1}{90}\int_{0}^{90} \exp(-\lambda_i t)dt = \frac{1-\exp(-\lambda_i 90)}{90\,\lambda_i}$$

The term is multiplied into Equation C-12 in Regulatory Guide 1.109. If the beef animals are sold commercially, then individuals would not be exposed continuously to meat containing radioactivity from the same farm. It is expected that this pathway will not cause significant individual exposures.

Population doses were based on U.S. Population distribution of:

Category	Ages (A)*	Fraction
Infant	A<2	0.015
Child	2≤A≤13	0.167

Category	Ages (A)*	Fraction
Teen	13<A<19	0.153
Adult	19≤A	0.665

* e.g., someone who is 1 year, 11 months is an infant, while someone who is exactly two years old is a child.

Tables 11.3-10 and 11.3-11 provide the doses estimated for individuals and the population within 50 miles of the plant site.

11.3.10.2 Summary of Annual Population Doses

TVA has estimated the radiological impact to regional population groups in the year 2040 from the normal operation of the Watts Bar Nuclear Plant. Table 11.3-11 summarizes these population doses. The total body dose from background to individuals within the United States ranges from approximately 100 mrem to 250 mrem per year. The annual total body dose due to background for a population of about 1,100,000 persons expected to live within a 50 mile radius of the Watts Bar Nuclear Plant in the year 2040 is calculated to be approximately 154,000 man-rem assuming 140 mrem/year/individual. By comparison, the same population (excluding onsite radiation workers) will receive a total body dose of approximately 3.85 man-rem from effluents. Based on these results, TVA concludes that the normal operation of the Watts Bar Nuclear Plant will present minimal risk to the health and safety of the public.

REFERENCES

None

Table 11.3-1 Gaseous Waste Processing System Component Data[1]

Waste Gas Compressors	
Number	2
Type	Water Sealed Centrifugal
Design flow rate, N2 (at 140°F, 2 psig) cfm	40
Design pressure, psig	150
Design temperature, °F	180
Normal operating pressure, psig	
Suction	2.0 - 3.5
Discharge	0 - 100
Normal operating temperature, °F	70 - 130
Gas Decay Tanks	
Number	9
Volume, each, ft^3	600
Design pressure, psig	150
Design temperature, °F	180
Normal operating pressure, psig	0 - 110
Normal operating temperatures, °F	50 - 140
Material of construction	Carbon steel
Type	Vertical Cylindrical
Sequential Automatic Gas Analyzer	
Oxygen	Electrochemical Sensor of the Polargraphic Type, 0 - 20% O_2
Hydrogen[2]	By Thermal Conductivity, 0 - 100% H2
Automatic stepping switch	8 steps
Recorded Readout	8 points
Temperature, °F	120
Number (Shared)	1

1. For design codes and safety classes, see Section 3.2.

2. Hydrogen is quantified to determine if it exceeds lower flammability limit.

Table 11.3-2 *Historical Data* Airborne Radioactive Noble Gas Releases For 1973 From Westinghouse Designed Operating Reactors

	Plant	Total Released Curies
1.	Yankee Rowe	3.5×10^{1}
2.	Connecticut Yankee (Haddam Neck)	3.2×10^{1}
3.	San Onofre	1.1×10^{4}
4.	R. E. Ginna	5.76×10^{2}
5.	H. B. Robinson	3.1×10^{3}
6.	Point Beach Units 1 and 2	5.75×10^{3}

Table 11.3-3 Bases Used In Calculating Expected System Activities and Releases From The GWPS

A. EXPECTED SYSTEM ACTIVITY

1. The major inputs to the gas system during normal operation are vents on the CVCS Holdup Tanks (HUT) and Reactor Coolant Drain Tanks (RCDT). Inputs from the gas analyzer sampling system and CVCS volume control tank are assumed to be negligible.
2. Reactor coolant gaseous activities are based on NUREG-0017 as modified to reflect Watts Bar plant parameters.
3. Twenty-five percent of dissolved radiogases in the reactor coolant entering the RCDT's and HUT's leave solution and enter the vapor space.
4. Radioactive decay was assumed while the CVCS HUT, RCDT's and gas decay tanks were filling. No additional decay was assumed in the evaporator.
5. The CVCS HUT is assumed to be filled to 80% capacity before processing by the waste disposal system. The RCDT's are assumed to be filled to 300 gallons before draining.
6. Values for liquid flow rates to the tanks were based on estimates of annual average flows.

CVCS HUT flow	4 gpm	(2 gpm per unit)
RCDT flow	300 gpd	(per each unit)

7. Plant capacity factor 0.8
8. Iodine partition coefficient in the RCDT's and CVCS HUT was

   $\frac{7.5 \times 10^{-3}\ \mu Ci/cc \text{ in vapor}}{\mu Ci/cc \text{ in liquid}}$ (Based on NUREG-0017)
9. Hydrogen concentration in the primary coolant was assumed 35 cc/kg.

B. ANNUAL RELEASES

Per NUREG-0017, the following assumptions were used in calculating expected annual releases

1. 173 ft^3/day (at STP) of reactor coolant offgas is input into the waste gas disposal system.
2. WGDT inventory is assumed to be at RCS coolant concentrations, after correcting for standard temperature and pressure (273.2°K and 14.7 psia)
3. RCS coolant is at 588.2°F and 2250 psia.
4. GWPS releases are based on a 60 day hold-up time.
5. Particulate releases are taken from Table 2-17 of NUREG-0017.

Table 11.3-4 Process Parameters And Expected Activities In Gaseous Waste System (Concentrations In µCi/Gm) (Sheet 1 of 2)

		Pressure (PSIG)	Flow Temp. (°F)	Rate (cc/day)	KR83M	KR85M	KR85	KR87	KR88	KR89	XE131M	XE133M	XE133	XE135M
1.	Unit 1 RCDT Vent	1.5	170 max.	1.14(+6)	0.0E+06	1.5E-03	3.2E-02	1.4E-02	1.3E-02	0.0E+00	7.3E-02	3.9E-04	2.9E-01	7.5E-04
2.	Unit 2 RCDT Vent	1.5	170 max.	1.14(+6)	0.0E+06	1.5E-03	3.2E-02	1.4E-02	1.3E-02	0.0E+00	7.3E-02	3.9E-04	2.9E-01	7.5E-04
3.	Sampling System VCT Vent Unit 1	1.5	115	0	0.0E+00	0.0E+00	0.0E+00	0.0E+00	0.0E+00	0.0E+00	0.0E+00	0.0E+00	0.0E+00	0.0E+00
4.	Sampling System VCT Vent Unit 2	1.5	115	0	0.0E+00	0.0E+00	0.0E+00	0.0E+00	0.0E+00	0.0E+00	0.0E+00	0.0E+00	0.0E+00	0.0E+00
5.	CVCS HUT Vent	-	-	2.18(+7)	0.0E+00	9.0E-05	2.9E-02	2.3E-03	1.0E-03	0.0E+00	5.6E-02	2.4E-05	1.7E-01	4.6E-05
6.	Gas Analyzer	-	-	0	0.0E+00	0.0E+00	0.0E+00	0.0E+00	0.0E+00	0.0E+00	0.0E+00	0.0E+00	0.0E+00	0.0E+00
7.	Waste Disposal System SRST Vent	-	-	0	0.0E+00	0.0E+00	0.0E+00	0.0E+00	0.0E+00	0.0E+00	0.0E+00	0.0E+00	0.0E+00	0.0E+00
8.	CVCS VCT Vent Unit 1	1.5	115	0	0.0E+00	4.1E-01	3.5E+00	1.4E-01	5.3E-01	0.0E+00	5.3E-00	4.8E-01	2.0E+01	2.5E-02
9.	CVCS VCT Vent Unit 2	1.5	115	0	0.0E+00	4.1E-01	3.5E+00	1.4E-01	5.3E-01	0.0E+00	5.3E-00	4.8E-01	2.0E+01	2.5E-02
10.	Combination of Normal 1/p to WPS(G)	1.5	VAR	2.48(+7)	0.0E+00	3.9E-04	2.0E-01	8.5E-03	4.2E-03	0.0E+00	3.3E-01	1.0E-04	8.8E-01	2.0E-04
11.	Compressor Recirculation Line	1.5	140	0	0.0E+00	3.9E-04	2.0E-01	8.5E-03	4.2E-03	0.0E+00	3.3E-01	1.0E-04	8.8E-01	2.0E-04
12.	Compressor Inlet	3.5	VAR	2.48(+7)	0.0E+00	3.9E-04	2.0E-01	8.5E-03	4.2E-03	0.0E+00	3.3E-01	1.0E-04	8.8E-01	2.0E-04
13.	Compressor Inlet	2.0	VAR	2.48(+7)	0.0E+00	3.9E-04	2.0E-01	8.5E-03	4.2E-03	0.0E+00	3.3E-01	1.0E-04	8.8E-01	2.0E-04
14.	Downstream of Compressor	100	140	2.48(+7)	0.0E+00	1.8E-03	9.6E-01	4.0E-02	2.0E-02	0.0E+00	1.6E+00	4.8E-04	4.1E+00	1.0E-03
15.	Compressor Outlet to GDT's	-	-	0	0.0E+00	1.8E-03	9.6E-01	4.0E-02	2.0E-02	0.0E-02	1.6E+00	4.8E-04	4.1E+00	1.0E-03
16.	Inlets to Filling GDT's	100	140	2.48(+7)	0.0E+00	1.8E-03	9.6E-01	4.0E-02	2.0E-02	0.0E-02	1.6E+00	4.8E-04	4.1E+00	1.0E-03
17.	Line to GDT Header	100	AMB	VAR	0.0E+00	1.0E-05	9.6E-01	6.0E-0	6.5E-04	0.0E+00	1.4E+00	1.5E-06	3.1E+00	3.0E-06
18.	Discharge Line	20	AMB	VAR	0.0E+00	0.0E+00	4.6E-01	0.0E+00	0.0E+00	0.0E+00	2.1E-02	0.0E+00	5.6E-04	0.0E+00
19.	Discharge Line	1	AMB	VAR	0.0E+00	0.0E+00	4.6E-01	0.0E+00	0.0E+00	0.0E+00	2.1E-02	0.0E+00	5.6E-04	0.0E+00
20.	Gas Analyzer	2	AMB	0	0.0E+00	0.0E+00	0.0E+00	0.0E+00	0.0E+00	0.0E+00	0.0E+00	0.0E+00	0.0E+00	0.0E+00
21.	From GDT's to Compressor Inlet	100	AMB	2.48(+7)	0.0E+00	1.0E-05	9.6E-01	6.0E-03	6.5E-04	0.0E+00	1.4E+00	1.5E-06	3.1E+00	3.0E-06
22.	From GDT's to BRS HT's	3	AMB	2.48(+7)	0.0E+00	1.0E-05	9.6E-01	6.0E-03	6.5E-04	0.0E+00	1.4E+00	1.5E-06	3.1E+00	3.0E-06

Table 11.3-4 PROCESS PARAMETERS AND EXPECTED ACTIVITIES IN GASEOUS WASTE SYSTEM (CONCENTRATIONS IN µCi/gm) (Sheet 2 of 2)

		Pressure (PSIG)	Temp. (°F)	Flow Rate (cc/day)	XE135	XE137	XE138	I130	I131	I132	I133	I134	I135
1.	Unit 1 RCDT Vent	1.5	170 max.	1.14(+6)	7.0E-02	5.0E-05	7.5E-04	0.0E+00	3.4E-04	3.8E-04	8.9E-04	2.7E-04	1.0E-03
2.	Unit 2 RCDT Vent	1.5	170 max.	1.14(+6)	7.0E-02	5.0E-05	7.5E-04	0.0E+00	3.4E-04	3.8E-04	8.9E-04	2.7E-04	1.0E-03
3.	Sampling System VCT Vent Unit 1	1.5	115	0	0.0E+00	0.0E+00	0.0E+00	0.0E+00	0.0E+00	0.0E+00	0.0E+00	0.0E+00	0.0E+00
4.	Sampling System VCT Vent Unit 2	1.5	115	0	0.0E+00	0.0E+00	0.0E+00	0.0E+00	0.0E+00	0.0E+00	0.0E+00	0.0E+00	0.0E+00
5.	CVCS HUT Vent	-	-	2.18(+7)	9.7E-03	3.0E-06	4.7E-05	0.0E+00	2.4E-05	2.8E-06	1.7E-05	1.8E-06	1.0E-05
6.	Gas Analyzer	-	-	0	0.0E+00	0.0E+00	0.0E+00	0.0E+00	0.0E+00	0.0E+00	0.0E+00	0.0E+00	0.0E+00
7.	Waste Disposal System SRST Vent	-	-	0	0.0E+00	0.0E+00	0.0E+00	0.0E+00	0.0E+00	0.0E+00	0.0E+00	0.0E+00	0.0E+00
8.	CVCS VCT Vent Unit 1	1.5	115	0	3.2E+00	1.7E-03	2.5E-02	0.0E+00	0.0E+00	0.0E+00	0.0E+00	0.0E+00	0.0E+00
9.	CVCS VCT Vent Unit 2	1.5	115	0	3.2E+00	1.7E-03	2.5E-02	0.0E+00	0.0E+00	0.0E+00	0.0E+00	0.0E+00	0.0E+00
10.	Combination of Normal 1/p to WPS(G)	1.5	VAR	2.48(+7)	3.9E-02	1.3E-05	2.0E-04	0.0E+00	5.3E-05	3.8E-05	4.6E-05	2.5E-05	1.0E-04
11.	Compressor Recirculation Line	1.5	140	0	3.5E-02	1.3E-05	2.0E-04	0.0E+00	5.3E-05	3.8E-05	9.6E-05	2.5E-05	1.0E-04
12.	Compressor Inlet	3.5	VAR	2.48(+7)	3.5E-02	1.3E-05	2.0E-04	0.0E+00	5.3E-05	3.8E-05	9.6E-05	2.5E-05	1.0E-04
13.	Compressor Inlet	2.0	VAR	2.48(+7)	3.5E-02	1.3E-05	2.0E-04	0.0E+00	5.3E-05	3.8E-05	9.6E-05	2.5E-05	1.0E-04
14.	Downstream of Compressor	100	140	2.48(+7)	1.7E-01	6.1E-05	9.6E-04	0.0E+00	2.6E-04	1.8E-04	4.4E-04	1.2E-04	4.9E-04
15.	Compressor Outlet to GDT's	-	-	0	1.7E-01	6.1E-05	9.6E-04	0.0E+00	2.6E-04	1.8E-04	4.4E-04	1.2E-04	4.9E-04
16.	Inlet to Filling GDT's	100	140	2.48(+7)	1.7E-01	6.1E-05	9.6E-04	0.0E+00	2.6E-04	1.8E-04	4.4E-04	1.2E-04	4.9E-04
17.	Line to GDT Header	100	AMB	VAR	1.8E-02	3.1E-08	3.1E-06	0.0E+00	2.0E-04	4.8E-06	1.1E-04	1.3E-06	3.9E-05
18.	Discharge Line	20	AMB	VAR	0.0E+00	0.0E+00	0.0E+00	0.0E+00	6.0E-07	0.0E+00	0.0E+00	0.0E+00	0.0E+00
19.	Discharge Line	1	AMB	VAR	0.0E+00	0.0E+00	0.0E+00	0.0E+00	6.0E-07	0.0E+00	0.0E+00	0.0E+00	0.0E+00
20.	Gas Analyzer	2	AMB	0	0.0E+00	0.0E+00	0.0E+00	0.0E+00	0.0E+00	0.0E+00	0.0E+00	0.0E+00	0.0E+00
21.	From GDT's to Compressor Inlet	100	AMB	2.48(+7)	1.8E-03	3.1E-08	3.1E-06	0.0E+00	2.0E-04	4.8E-06	1.1E-04	1.3E-06	3.9E-05
22.	From GDT's to BRS HT's	3	AMB	2.48(+7)	1.8E-02	3.1E-08	3.1E-06	0.0E+06	2.0E-04	4.8E-06	1.1E-04	1.3E-06	3.9E-05

Table 11.3-5 Expected Annual Gaseous Releases From The GWPS - Per Reactor Unit

	GWPS Gas release (Ci/Yr)
Kr-85m	0.00E+00
Kr-85	4.63E+00
Kr-87	0.00E+00
Kr-88	0.00E+00
Xe-131M	3.52E-01
Xe-133M	1.14E-08
Xe-133	1.72E-02
Xe-135M	0.00E+00
Xe-135	6.01E-47
Xe-137	0.00E+00
Xe-138	0.00E+00
Ar-41	0.00E+00
Br-84	0.00E+00
I-131	1.44E-03
I-132	0.00E+00
I-133	1.16E-21
I-134	0.00E+00
I-135	4.08E-66
H-3	0.00E+00
Cr-51	1.40E-07
Mn-54	2.10E-08
Co-57	0.00E+00
Co-58	8.70E-08
Co-60	1.40E-07
Fe-59	1.80E-08
Sr-89	4.40E-07
Sr-90	1.70E-07
Zr-95	4.80E-08
Nb-95	3.70E-08
Ru-103	3.20E-08
Ru-106	2.70E-08
Sb-125	0.00E+00
Cs-134	3.30E-07
Cs-136	5.30E-08
Cs-137	7.70E-07
Ba-140	2.30E-07
Ce-141	2.20E-08
C-14	1.20E+00

Table 11.3-6 Radioactive Gaseous Effluent Parameters (Page 1 of 2)

1. Thermal Power Rating is 3582 MWt. (For Unit 1 only, Tritium releases based on 3425 MWt. Tritium isotope determination for the Non-Tritium Production Core based on 3480 MWt)
2. Primary and secondary side coolant and steam activities are based on NUREG-0017 and have been plant adjusted for WBN specific parameters.
3. RCS water parameters:

   Volume = 11,375 ft^3
   Press. = 2250 psia
   Temp. = 588.2 °F
   Spec. Vol. = 0.02265 ft^3/lb
4. Containment releases are filtered through a HEPA and charcoal filter with minimum filtration efficiencies of 99% and 70%, respectively.
5. Containment gaseous source terms are based on a 3%/day (noble gas) and 8.0E-4%/day (iodines) release of RCS coolant into the containment airborne atmosphere.
6. WCDT releases are based on a 173 ft^3/day (@ STP) input of RCS coolant offgas to the waste gas disposal system and a WGDT holdup time of 60 days.
7. Auxiliary Building (AB) ventilation noble gas source terms are based on a 160 lb/day release of RCS coolant activity into the AB atmosphere.
8. AB ventilation iodine releases are based on 1.85 Ci/yr per µCi/gm of RCS for 300 days and 6.8 Ci/yr per µCi/gm for 65 days.
9. Refueling Area iodine releases are based on 0.16 Ci/yr per µCi/gm of RCS for 300 days and 0.3 Ci/yr per µCi/gm for 65 days.
10. Turbine Building (TB) ventilation noble gas source terms are based on a 1700 lb/hr release of secondary steam into the TB atmosphere.
11. TB ventilation iodine source terms are based on 8500 Ci/yr per µCi/gm of secondary steam for 300 days and 1400 Ci/yr per µCi/gm for 65 days.
12. Condenser vacuum exhaust noble gas source terms are based on a steam flowrate to the condenser of 8.5E6 lb/hr at secondary steam activities.
13. Condenser vacuum exhaust iodine source terms are based on a 3500 Ci/yr per µCi/gm of secondary steam released to the condenser vacuum exhaust.
14. Steam generator blowdown flash tank source terms are based on a maximum steam generator blowdown flow of 12.5 gpm/steam generator. Iodines are further reduced in the offgases by applying a 0.05 partition factor. There are no noble gas releases from this path as there are no noble gas source terms in the secondary coolant.
15. Ar-41 releases are 34 Ci/yr.
16. Total tritium releases are based on 0.4 Ci/yr per MWt, with 10% of that available for release via gaseous pathways.
17. Total particulate releases are taken directly from Table 2-17 of NUREG-0017. Since these values are prior to treatment, the releases from the Containment Building either through the purge air, or containment vent filters, are reduced by applying a HEPA filtration factor of 0.01 (99% efficiency).

Table 11.3-6 Radioactive Gaseous Effluent Parameters (Page 2 of 2)

18.	C-14 releases are 1.6 Ci/yr from containment, 4.5 Ci/yr from the AB, and 1.2 Ci/yr from the GWPS for a total of 7.3 Ci/yr.
19.	The WGS discharge is filtered with a HEPA (efficiency of 99%) and charcoal (efficiency 70%) filter prior to release.
20.	NUREG-0017 suggests 22 containment purges a year during power operation, and 2 purges during refueling. However, one purge every two weeks will be used in the calculation. In addition, continuous containment vent with 100 cfm will be evaluated.

Table 11.3-7 Annual Radioactive Releases With Purge Air Filters (Curies/Year/Reactor)

Table based on operation of one unit.

Nuclide	Contain.(1) Building	Aux. Building	Turbine Building	Total
Kr-85m	2.00E+01	4.53E+00	1.23E+00	2.58E+01
Kr-85	6.90E+02	7.05E+00	1.86E+00	6.99E+02
Kr-87	1.09E+01	4.27E+00	1.09E+00	1.62E+01
Kr-88	2.84E+01	7.95E+00	2.13E+00	3.85E+01
Xe-131m	1.17E+03	1.73E+01	4.53E+00	1.19E+03
Xe-133m	4.63E+01	1.90E+00	5.21E-01	4.88E+01
Xe-133	3.12E+03	6.70E+01	1.77E+01	3.20E+03
Xe-135m	3.86E+00	3.68E+00	9.80E-01	8.52E+00
Xe-135	1.55E+02	2.40E+01	6.46E+00	1.85E+02
Xe-137	3.18E-01	9.67E-01	2.58E-01	1.54E+00
Xe-138	3.33E+00	3.42E+00	9.06E-01	7.66E+00
Ar-41	3.40E+01	0.00E+00	0.00E+00	3.40E+01
Br-84	6.00E-05	5.02E-02	4.81E-04	5.07E-02
I-131	7.29E-03	1.39E-01	7.08E-03	1.53E-01
I-132	1.61E-03	6.56E-01	1.70E-02	6.75E-01
I-133	3.55E-03	4.35E-01	2.03E-02	4.58E-01
I-134	1.66E-03	1.06E+00	1.47E-02	1.08E+00
I-135	3.16E-03	8.10E-01	3.13E-02	8.45E-01
H-3	1.39E+02	0.00E+00	0.00E+00	1.39E+02
H-3 (TPC)(3)				
Unit 1 Only	3.70E+02	0.00E+00	0.00E+00	3.70E+02
Cr-51	9.21E-05	5.00E-04	0.00E+00	5.92E-04
Mn-54	5.30E-05	3.78E-04	0.00E+00	4.31E-04
Co-57	8.20E-06	0.00E+00	0.00E+00	8.20E-06
Co-58	2.50E-04	2.29E-02	0.00E+00	2.32E-02
Co-60	2.61E-05	8.71E-03	0.00E+00	8.74E-03
Fe-59	2.70E-05	5.00E-05	0.00E+00	7.70E-05
Sr-89	1.30E-04	2.85E-03	0.00E+00	2.98E-03
Sr-90	5.22E-05	1.09E-03	0.00E+00	1.14E-03
Zr-95	4.80E-08	1.00E-03	0.00E+00	1.00E-03
Nb-95	1.80E-05	2.43E-03	0.00E+00	2.45E-03
Ru-103	1.60E-05	6.10E-05	0.00E+00	7.70E-05
Ru-106	2.70E-08	7.50E-05	0.00E+00	7.50E-05
Sb-125	0.00E+00	6.09E-05	0.00E+00	6.09E-05
Cs-134	2.53E-05	2.24E-03	0.00E+00	2.27E-03
Cs-136	3.21E-05	4.80E-05	0.00E+00	8.01E-05
Cs-137	5.58E-05	3.42E-03	0.00E+00	3.48E-03
Ba-140	2.30E-07	4.00E-04	0.00E+00	4.00E-04
Ce-141	1.30E-05	2.64E-05	0.00E+00	3.95E-05
C-14	2.80E+00	4.50E+00	0.00E+00	7.30E+00

(1) Includes release from GWPS
(2) 4.28E+02 = 4.28 X 10^2
(3) Tritium values for a Tritim Production Core

Table 11.3-7a Design (For 1% Failed Fuel) Expected Gas Release Concentration/(Effluent Concentration Limit) With Containment Purge (Sheet 1 of 2)

	Exp. Rel. (Ci/yr)	Des/Exp	Design (Ci/yr)	Design (μCi/cc)	10CFR20 (ECL)	**Single Unit Operation** C/ECL	**Dual Unit Operation** C/ECL
Kr-85m	2.58E+01	12.28	3.17E+02	1.10E-10	1.0E-07	0.0010951	0.0021902
Kr-85	6.99E+02	33.08	2.31E+04	7.99E-09	7.0E-07	0.0114124	0.0228248
Kr-87	1.62E+01	7.45	1.21E+02	4.18E-11	2.0E-08	0.0020906	0.0041812
Kr-88	3.85E+01	12.33	4.75E+02	1.64E-10	9.0E-09	0.0182306	0.0364612
Xe-131m	1.19E+03	2.91	3.45E+03	1.19E-09	2.0E-06	0.0005971	0.0011942
Xe-133m	4.88E+01	43.24	2.11E+03	7.29E-10	6.0E-07	0.0012142	0.0024284
Xe-133	3.20E+03	111.07	3.55E+05	1.23E-07	5.0E-07	0.2456675	0.4913350
Xe-135m	8.52E+00	5.04	4.29E+01	1.48E-11	4.0E-08	0.0003710	0.0007420
Xe-135	1.85E+02	6.97	1.29E+03	4.46E-10	7.0E-08	0.006375	0.012750
Xe-138	7.66E+00	5.43	4.16E+01	1.44E-11	2.0E-08	0.0007188	0.0014376
Br-84	5.07E-02	2.50	1.27E-01	4.38E-14	8.0E-08	5.478E-07	1.096E-06
I-131	1.53E-01	52.41	8.03E+00	2.77E-12	2.0E-10	0.013875	0.027750
I-132	6.75E-01	4.00	2.70E+00	9.33E-13	2.0E-08	4.67E-05	0.0000934
I-133	4.58E-01	26.85	1.23E+01	4.25E-12	1.0E-09	0.0042535	0.0085070
I-134	1.08E+00	1.65	1.78E+00	6.14E-13	6.0E-08	1.023E-05	2.046E-05
I-135	8.45E-01	7.91	6.69E+00	2.31E-12	6.0E-09	0.0003851	0.0007702
Cs-134	2.27E-03	40.60	9.20E-02	3.18E-14	2.0E-10	0.0001589	0.0003178
Cs-136	8.01E-05	165.20	1.32E-02	4.57E-15	9.0E-10	5.079E-06	1.016E-05
Cs-137	3.48E-03	153.22	5.33E-01	1.84E-13	2.0E-10	0.0009203	0.0018406
Cr-51	5.92E-04	0.29	1.73E-04	5.96E-17	3.0E-08	1.988E-09	3.976E-09
Mn-54	4.31E-04	0.47	2.03E-04	7.01E-17	1.0E-09	7.005E-08	1.401E-07
Fe-59	7.70E-05	3.48	2.68E-04	9.27E-17	5.0E-10	1.853E-07	3.706E-07
Co-58	2.32E-02	5.37	1.24E-01	4.30E-14	1.0E-09	4.298E-05	8.596E-05
Co-60	8.74E-03	1.38	1.21E-02	4.17E-15	5.0E-11	8.333E-05	1.667E-04
Sr-89	2.98E-03	22.45	6.69E-02	2.31E-14	1.0E-09	2.313E-05	4.626E-05
Sr-90	1.14E-03	13.49	1.54E-02	5.33E-15	6.0E-12	0.0008877	0.0017754
Zr-95	1.00E-03	1.71	1.71E-03	5.92E-16	4.0E-10	1.481E-06	2.962E-06
Nb-95	2.45E-03	2.34	5.73E-03	1.98E-15	2.0E-09	9.895E-07	1.979E-06
Ba-140	4.00E-04	0.31	1.26E-04	4.34E-17	2.0E-09	2.171E-08	4.342E-08
H-3	1.39E+02	1	1.39E+02	4.80E-11	1.0E-07	0.0004811	0.0009622
H-3 (TPC)	3.70E+02	1	3.70E+02	1.28E-10	1.0E-07	0.0012775	0.0012775
1 rod	1.53E+03	1	1.53E+03	5.29E-10	1.0E-07	0.0052869	0.0052869
2 rod	2.69E+03	1	2.69E+03	9.30E-10	1.0E-07	0.0092962	0.0092962
C-14	7.30E+00	1	7.30E+00	2.52E-12	3.0E-09	0.000841	0.001682
Ar-41	3.40E+01	1	3.40E+01	1.18E-11	1.0E-08	0.0011752	0.0023504
Total						0.3109694	0.6219388
Total (TPC)						0.3117657	0.6227352
1 rod						0.3157751	0.6267446
2 rod						0.3197845	0.6307539

Table 11.3-7a Design (For 1% Failed Fuel) Expected Gas Release Concentration/(Effluent Concentration Limit) With Containment Purge (Sheet 2 of 2)

Note: The "Dual Unit Operation" column in the above calculation considers dual unit operation. Based on the evaluation done for Revision 7, the per unit concentrations are the same for both units. Therefore, the last column is twice the preceeding column except in the case of TPC.

Note: Dual unit operation considers only Unit 1 with TPC.

Table 11.3-7b Design (For 1% Failed Fuel) Expected Gas Release Concentration/(Effluent Concentration Limit) With Continuous Filtered Containment Vent (Sheet 1 of 2)

	Exp. Rel. (Ci/yr)	Des/Exp	Design (Ci/yr)	Design (μCi/cc)	10CFR20 (ECL)	**Single Unit Operation** C/ECL	**Dual Unit Operation** C/ECL
Kr-85m	9.48E+00	12.28	1.16E+02	4.02E-11	1.0E-07	0.0004024	0.0008048
Kr-85	6.78E+02	33.08	2.24E+04	7.75E-09	7.0E-07	0.0110743	0.0221486
Kr-87	5.81E+00	7.45	4.33E+01	1.50E-11	2.0E-08	0.0007480	0.0014960
Kr-88	1.32E+01	12.33	1.63E+02	5.63E-11	9.0E-09	0.0062505	0.0125010
Xe-131m	1.09E+03	2.91	3.18E+03	1.10E-09	2.0E-06	0.0005489	0.0010978
Xe-133m	4.31E+01	43.24	1.86E+03	6.44E-10	6.0E-07	0.0010735	0.0021470
Xe-133	2.90E+03	111.07	3.22E+05	1.11E-07	5.0E-07	0.2227110	0.4454220
Xe-135m	4.68E+00	5.04	2.36E+01	8.15E-12	4.0E-08	0.0002038	0.0004076
Xe-135	8.88E+01	6.97	6.19E+02	2.14E-10	7.0E-08	0.0030561	0.0061122
Xe-138	4.34E+00	5.43	2.36E+01	8.15E-12	2.0E-08	0.0004073	0.0008146
Br-84	5.07E-02	2.50	1.27E-01	4.38E-14	8.0E-08	0.0000005	0.0000010
I-131	1.53E-01	52.41	8.00E+00	2.77E-12	2.0E-10	0.0138277	0.0276554
I-132	6.73E-01	4.00	2.69E+00	9.30E-13	2.0E-08	0.0000465	0.0000930
I-133	4.57E-01	26.85	1.23E+01	4.24E-12	1.0E-09	0.0042433	0.0084866
I-134	1.07E+00	1.65	1.77E+00	6.10E-13	6.0E-08	0.0000102	0.0000204
I-135	8.42E-01	7.91	6.66E+00	2.30E-12	6.0E-09	0.0003837	0.0007674
Cs-134	2.27E-03	40.60	9.20E-02	3.18E-14	2.0E-10	0.0001589	0.0003178
Cs-136	8.01E-05	165.20	1.32E-02	4.57E-15	9.0E-10	0.0000051	0.0000102
Cs-137	3.48E-03	153.22	5.33E-01	1.84E-13	2.0E-10	0.0009203	0.0018406
Cr-51	5.92E-04	0.29	1.73E-04	5.96E-17	3.0E-08	0.0000000	0.0000000
Mn-54	4.31E-04	0.47	2.03E-04	7.01E-17	1.0E-09	0.0000001	0.0000002
Fe-59	7.70E-05	3.48	2.68E-04	9.27E-17	5.0E-10	0.0000002	0.0000004
Co-58	2.32E-02	5.37	1.24E-01	4.30E-14	1.0E-09	0.0000430	0.0000860
Co-60	8.74E-03	1.38	1.21E-02	4.17E-15	5.0E-11	0.0000833	0.0001666
Sr-89	2.98E-03	22.45	6.69E-02	2.31E-14	1.0E-09	0.0000231	0.0000462
Sr-90	1.14E-03	13.49	1.54E-02	5.33E-15	6.0E-12	0.0008877	0.0017754
Zr-95	1.00E-03	1.71	1.71E-03	5.92E-16	4.0E-10	0.0000015	0.0000030
Nb-95	2.45E-03	2.34	5.73E-03	1.98E-15	2.0E-09	0.0000010	0.0000020
Ba-140	4.00E-04	0.31	1.26E-04	4.34E-17	2.0E-09	0.0000000	0.0000000
H-3	1.39E+02	1	1.39E+02	4.80E-11	1.0E-07	0.0004811	0.0009622
H-3 (TPC)	3.70E+02	1	3.70E+02	1.28E-10	1.0E-07	0.0012775	0.0012775
1 rod	1.53E+03	1	1.53E+03	5.29E-10	1.0E-07	0.0052869	0.0052869
2 rod	2.69E+03	1	2.69E+03	9.30E-10	1.0E-07	0.0092962	0.0092962
C-14	7.30E+00	1	7.30E+00	2.52E-12	3.0E-09	0.0008410	0.0016820
Ar-41	3.40E+01	1	3.40E+01	1.18E-11	1.0E-08	0.0011752	0.0023504
Total						0.2696131	0.5392262
Total (TPC)						0.2704095	0.5400226
1 rod						0.2744189	0.5440320
2 rod						0.2784283	0.5480413

Table 11.3-7b Design (For 1% Failed Fuel) Expected Gas Release Concentration/(Effluent Concentration Limit) With Continuous Filtered Containment Vent (Sheet 2 of 2)

Note: The "Dual Unit Operation" column in the above calculation considers dual unit operation. Based on the evaluation done for Revision 7, the per unit concentrations are the same for both units. Therefore, the last column is twice the preceeding column except in the case of TPC.

Note: Dual unit operation considers only Unit 1 with TPC.

Table 11.3-7c Total Releases (≈ 1/8 failed fuel in Ci/yr), with Continuous Filtered Containment Vent (Sheet 1 of 1)

Table based on operation of one unit

Nuclide	Contain.[1] Building	Aux. Building	Turbine Building	Total
Kr-85m	3.72E+00	4.53E+00	1.23E+00	9.48E+00
Kr-85	6.69E+02	7.05E+00	1.86E+00	6.78E+02
Kr-87	4.48E-01	4.27E+00	1.09E+00	5.81E+00
Kr-88	3.10E+00	7.95E+00	2.13E+00	1.32E+01
Xe-131m	1.07E+03	1.73E+01	4.53E+00	1.09E+03
Xe-133m	4.07E+01	1.90E+00	5.21E-01	4.31E+01
Xe-133	2.82E+03	6.70E+01	1.77E+01	2.90E+03
Xe-135m	2.26E-02	3.68E+00	9.80E-01	4.68E+00
Xe-135	5.83E+01	2.40E+01	6.46E+01	8.88E+01
Xe-137	3.76E-04	9.67E-01	2.58E-01	1.23E+00
Xe-138	1.69E-02	3.42E+00	9.06E-01	4.34E+00
Ar-41	3.40E+01	0.00E+00	0.00E+00	3.40E+01
Br-84	8.16E-07	5.02E-02	4.81E-04	5.07E-02
I-131	6.74E-03	1.39E-01	7.08E-03	1.53E-01
I-132	1.36E-04	6.56E-01	1.70E-02	6.73E-01
I-133	2.36E-03	4.35E-01	2.03E-02	4.57E-01
I-134	4.26E-05	1.06E+00	1.47E-02	1.07E+00
I-135	8.80E-04	8.10E-01	3.13E-02	8.42E-01
H-3	1.39E+02	0.00E+00	0.00E+00	1.39E+02
H-3 (TPC)	3.70E+02	0.00E+00	0.00E+00	3.70E+02
Cr-51	9.21E-05	5.00E-04	0.00E+00	5.92E-04
Mn-54	5.30E-05	3.78E-04	0.00E+00	4.31E-04
Co-57	8.20E-06	0.00E+00	0.00E+00	8.20E-06
Co-58	2.50E-04	2.29E-02	0.00E+00	2.32E-02
Co-60	2.61E-05	8.71E-03	0.00E+00	8.74E-03
Fe-59	2.70E-05	5.00E-05	0.00E+00	7.70E-05
Sr-89	1.30E-04	2.85E-03	0.00E+00	2.98E-03
Sr-90	5.22E-05	1.09E-03	0.00E+00	1.14E-03
Zr-95	4.80E-08	1.00E-03	0.00E+00	1.00E-03
Nb-95	1.80E-05	2.43E-03	0.00E+00	2.45E-03
Ru-103	1.60E-05	6.10E-05	0.00E+00	7.70E-05
Ru-106	2.70E-08	7.50E-05	0.00E+00	7.50E-05
Sb-125	0.00E+00	6.09E-05	0.00E+00	6.09E-05
Cs-134	2.53E-05	2.24E-03	0.00E+00	2.27E-03
Cs-136	3.21E-05	4.80E-05	0.00E+00	8.01E-05
Cs-137	5.58E-05	3.42E-03	0.00E+00	3.48E-03
Ba-140	2.30E-07	4.00E-04	0.00E+00	4.00E-04
Ce-141	1.30E-05	2.64E-05	0.00E+00	3.95E-05
C-14	2.80E+00	4.50E+00	0.00E+00	7.30E+00

(TPC) Tritium values for a Tritium Production Core (Unit 1 only)

Table 11.3-8 Data On Points Of Interest Near Watts Bar Nuclear Plant (Page 1 of 2)

	Sector	Distance (Meters)	Chi-over-Q (s/m^3)	D-over-Q (1/m^2)	Terrain Adjustment Factor	Milk Feeding Factor
Unrestricted Area Boundary	N	1550	5.12e-06	8.13e-09	1.70	
Unrestricted Area Boundary	NNE	1980	6.35e-06	1.23e-08	1.80	
Unrestricted Area Boundary	NE	1580	1.05e-05	1.10e-08	2.10	
Unrestricted Area Boundary	ENE	1370	1.23e-05	8.77e-09	1.70	
Unrestricted Area Boundary	E	1280	1.37e-05	9.66e-09	1.60	
Unrestricted Area Boundary	ESE	1250	1.43e-05	1.16e-08	1.80	
Unrestricted Area Boundary	SE	1250	1.11e-05	9.49e-09	1.50	
Unrestricted Area Boundary	SSE	1250	6.04e-06	8.21e-09	1.50	
Unrestricted Area Boundary	S	1340	5.33e-06	1.17e-08	1.90	
Unrestricted Area Boundary	SSW	1550	4.14e-06	1.05e-08	2.00	
Unrestricted Area Boundary	SW	1670	4.46e-06	7.34e-09	2.10	
Unrestricted Area Boundary	WSW	1430	5.47e-06	6.37e-09	1.80	
Unrestricted Area Boundary	W	1460	2.11e-06	2.07e-09	1.20	
Unrestricted Area Boundary	WNW	1400	2.49e-06	2.38e-09	2.50	
Unrestricted Area Boundary	NW	1400	2.05e-06	2.13e-09	1.70	
Unrestricted Area Boundary	NNW	1460	2.68e-06	3.08e-09	1.60	
Resident	N	2134	2.84e-06	4.21e-09	1.50	
Resident	NNE	3600	2.69e-06	4.41e-09	1.80	
Resident	NE	3353	3.84e-06	3.22e-09	2.20	
Resident	ENE	2414	6.26e-06	3.83e-09	1.90	
Resident	E	3268	3.97e-06	2.14e-09	1.70	
Resident	ESE	4416	2.64e-06	1.46e-09	1.90	
Resident	SE	1372	9.66e-06	8.16e-09	1.50	
Resident	SSE	1524	4.18e-06	5.56e-09	1.40	
Resident	S	1585	3.91e-06	8.42e-09	1.80	
Resident	SSW	1979	2.76e-06	6.64e-09	1.90	
Resident	SW	4230	1.15e-06	1.43e-09	2.00	
Resident	WSW	1829	3.61e-06	4.03e-09	1.70	
Resident	W	2896	7.30e-07	6.01e-10	1.10	
Resident	WNW	1646	2.26e-06	2.12e-09	2.90	
Resident	NW	2061	1.03e-06	9.95e-10	1.50	
Resident	NNW	4389	3.50e-07	2.97e-10	1.00	
Garden	N	7664	3.13e-07	3.00e-10	1.00	
Garden	NNE	6173	1.06e-06	1.42e-09	1.50	
Garden	NE	3829	3.06e-06	2.44e-09	2.10	
Garden	ENE	4927	2.01e-06	9.39e-10	1.60	
Garden	E	4991	1.99e-06	9.02e-10	1.50	
Garden	ESE	6096	1.63e-06	7.77e-10	1.80	
Garden	SE	4633	1.58e-06	8.97e-10	1.30	
Garden	SSE	7454	4.74e-07	3.57e-10	1.40	
Garden	S	2254	2.50e-06	4.94e-09	1.90	

Table 11.3-8 Data On Points Of Interest Near Watts Bar Nuclear Plant (Page 2 of 2)

	Sector	Distance (Meters)	Chi-over-Q (s/m^3)	D-over-Q (1/m^2)	Terrain Adjustment Factor	Milk Feeding Factor
Garden	SSW	8100	2.79e-07	4.16e-10	1.40	
Garden	SW	8100	4.28e-07	4.03e-10	1.80	
Garden	WSW	4667	9.86e-07	8.06e-10	1.70	
Garden	W	5120	3.33e-07	2.23e-10	1.10	
Garden	WNW	5909	1.85e-07	1.13e-10	1.40	
Garden	NW	3170	5.63e-07	4.78e-10	1.50	
Garden	NNW	4698	3.18e-07	2.64e-10	1.00	
Milk Cow	ESE	6096	1.63e-06	7.77e-10	1.80	0.25
Milk Cow	ESE	6706	1.35e-06	6.18e-10	1.70	0.03
Milk Cow	SSW	2286	2.24e-06	5.20e-09	1.90	0.05
Milk Cow	SSW	3353	1.36e-06	2.84e-09	2.00	0.33

Table 11.3-9 Projected 2040 Population Distribution Within 50 Miles Of Watts Bar Nuclear Plant Population Within Each Sector Element Distance From Site (Miles)

	0-1	1-2	2-3	3-4	4-5	5-10	10-20	20-30	30-40	40-50
N	0	111	32	47	135	893	2071	2166	3453	4040
NNE	0	25	25	76	43	796	8591	19187	9342	1194
NE	0	0	130	208	130	861	3381	19210	30623	54111
ENE	0	2	55	53	78	252	2445	9497	38457	136395
E	0	2	7	53	38	482	9716	8837	10649	17404
ESE	0	2	4	47	58	591	4514	12085	3420	300
SE	0	0	16	35	29	505	17835	10818	3969	3756
SSE	12	23	3	27	24	714	4018	8056	3899	6362
S	0	54	14	24	257	1368	1141	34699	40812	11522
SSW	0	34	7	19	32	739	5653	17523	25829	117868
SW	0	0	5	2	0	519	6490	9411	68565	125338
WSW	0	10	40	38	30	1281	10369	2091	7134	6571
W	2	5	19	59	65	837	965	5337	2839	2035
WNW	5	30	10	140	121	244	1461	2925	3440	17598
NW	0	10	111	113	387	2279	314	7266	7004	9802
NNW	0	0	62	87	98	2081	874	18279	4784	2983
Total	19	308	540	1028	1525	14442	79838	187387	264219	517279

Table 11.3-10 Watts Bar Nuclear Plant- Individual Doses From Gaseous Effluents (For 1 Unit without TPC)

Effluent	Pathway	Guideline*	Location	Dose
Noble Gases	γ Air dose	10 mrad	Maximum Exposed Individual[1]	0.801 mrad/yr
	β Air dose	20 mrad	Maximum Exposed Individual[1]	2.710 mrad/yr
	Total body	5 mrem	Maximum Residence[2,3]	0.571 mrem/yr
	Skin	15 mrem	Maximum Residence[2,3]	1.540 mrem/yr
Iodines/ Particulates	Thyroid (critical organ)	15 mrem	Maximum Real Pathway[4]	2.715 mrem/yr

Breakdown of Iodine/Particulate Doses (mrem/yr)

Cow Milk with Feeding Factor of 0.33	2.44
Inhalation	0.174
Ground Contamination	0.0405
Submersion	0.0603
Beef Ingestion[1]	0.0
Total	2.7148

*Guidelines are defined in Appendix I to 10 CFR Part 50.

[1]Maximum exposure point is at 1250 meters in the SE sector.

[2]Dose from air submersion.

[3]Maximum exposed residence is at 1372 meters in the SE sector.

[4]Maximum exposed individual is an infant at 3353 meters in the SSW sector.

Table 11.3-11 Summary Of Population Doses

THYROID

	Infant	Child	Teen	Adult	Total
Submersion	8.28E-02	1.59E-01	1.44E-01	6.28E-01	9.45E-01
Ground	3.11E-03	3.49E-02	3.17E-02	1.38E-01	2.08E-01
Inhalation	7.45E-02	1.39E-00	7.44E-01	2.64E+00	4.85E+00
Cow Milk Ingestion	4.09E-01	1.98E-00	8.42E-01	1.60E-00	4.83E+00
Beef Ingestion	0.00E+00	3.52E-01	1.77E-01	8.93E-01	1.42E-00
Vegetable Ingestion	0.00E+00	1.18E-00	4.76E-01	1.26E-01	2.92E+00
Total man-rem	5.01E-01	5.10E+00	2.42E+00	7.15E+00	1.52E+01

TOTAL BODY

	Infant	Child	Teen	Adult	Total
Submersion	1.42E-02	1.59E-01	1.44E-01	6.28E-01	9.45E-01
Ground	3.11E-03	3.49E-02	3.17E-02	1.38E-01	2.08E-01
Inhalation	4.28E-03	1.14E-01	7.23E-02	2.99E-01	4.90E-01
Cow Milk Ingestion	1.14E-01	6.30E-01	2.39E-01	4.25E-01	1.41E-00
Beef Ingestion	0.00E+00	3.36E-01	1.69E-01	8.52E-01	1.36E-00
Vegetable Ingestion	0.00E+00	1.20E-00	5.08E-01	1.42E-00	3.12E+00
Total man-rem	1.36E-01	2.47E+00	1.16E-00	3.76E+00	7.53E+00

THIS PAGE IS INTENTIONALLY LEFT BLANK

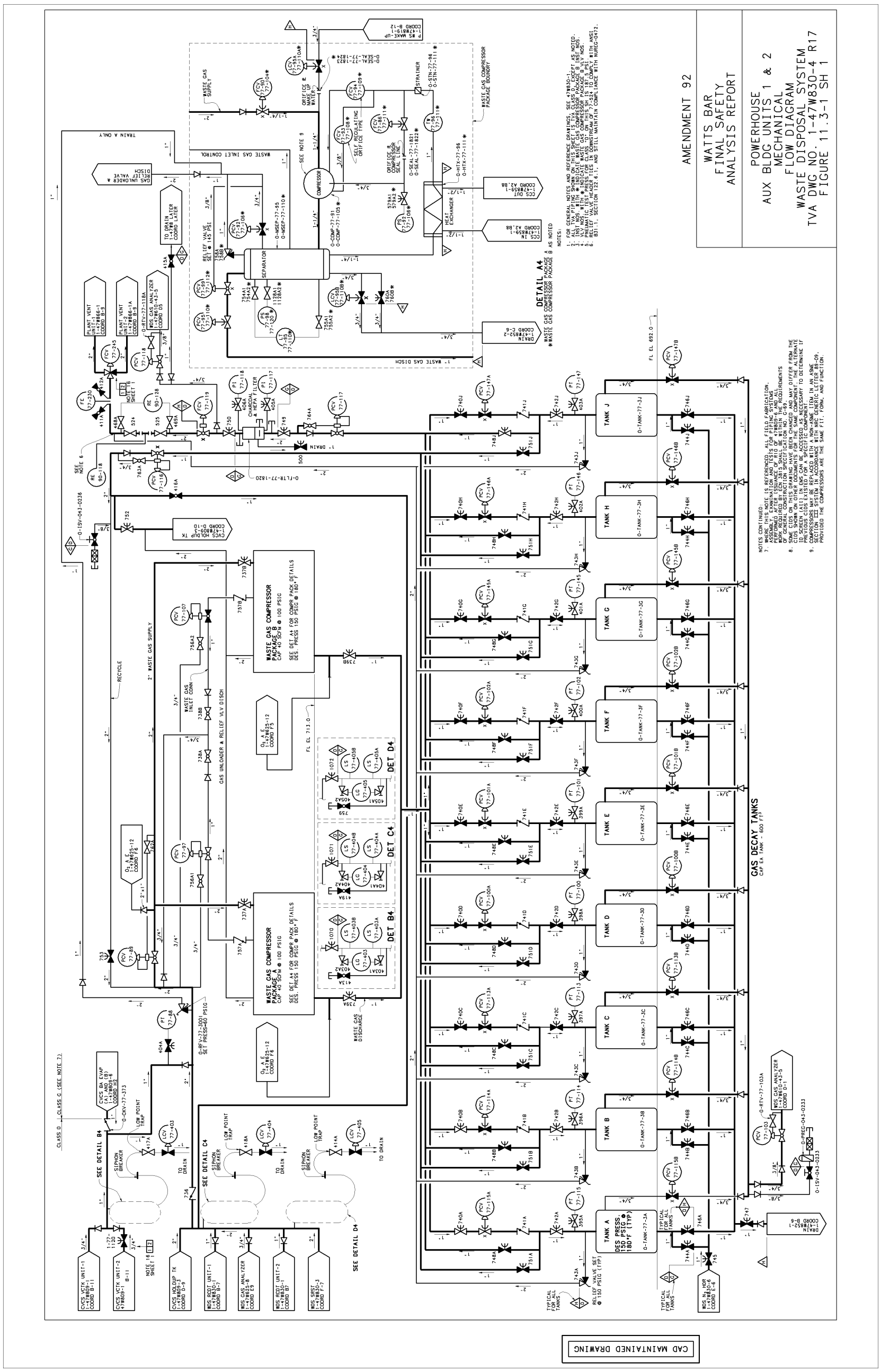

Figure 11.3-1 Powerhouse Aux Bldg Units 1 & 2 Mechanical Flow Diagram Waste Disposal System (Sheet 1)

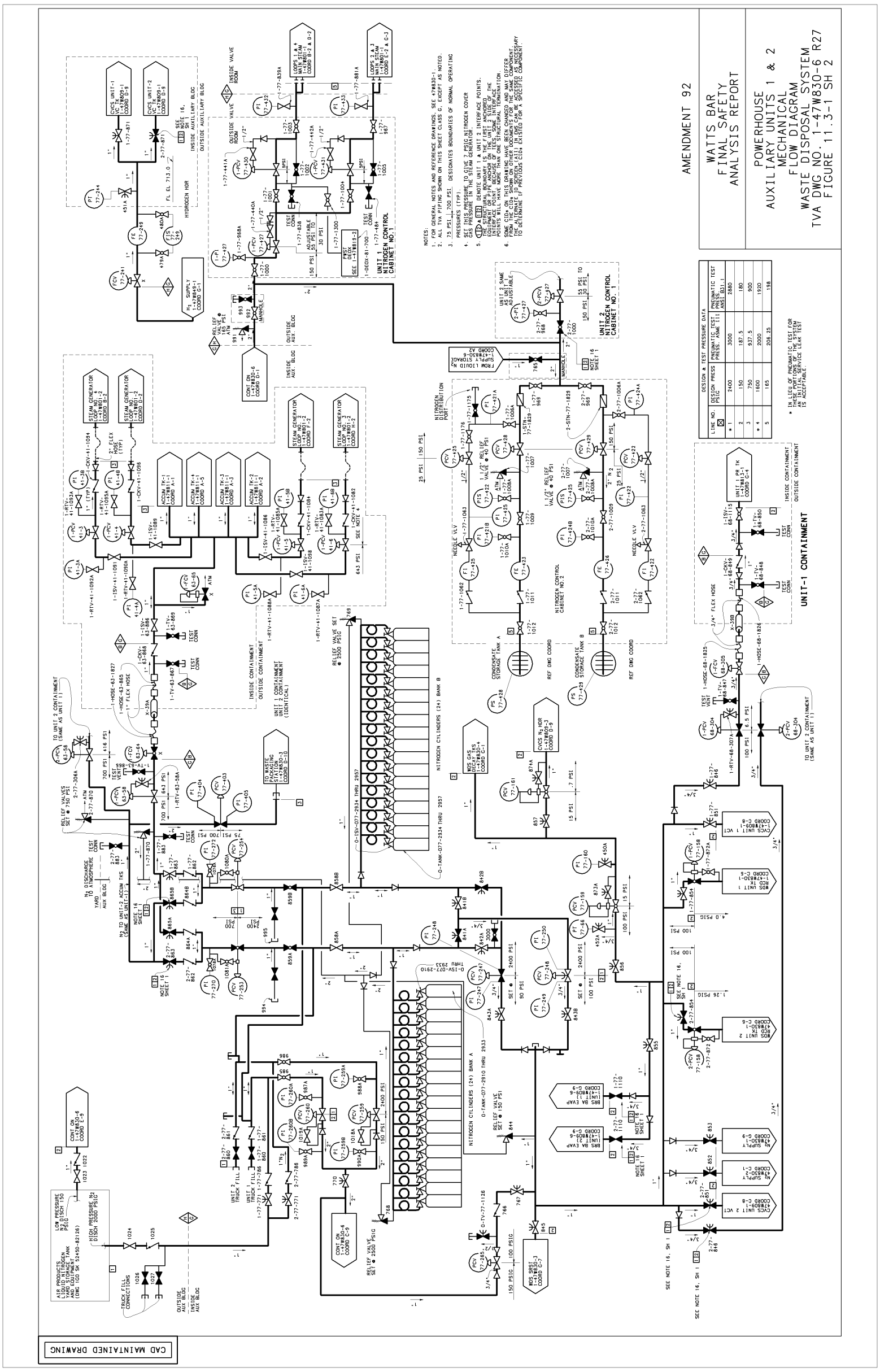

Figure 11.3-1 Powerhouse Aux Bldg Units 1 & 2 Mechanical Flow Diagram Waste Disposal System (Sheet 2)

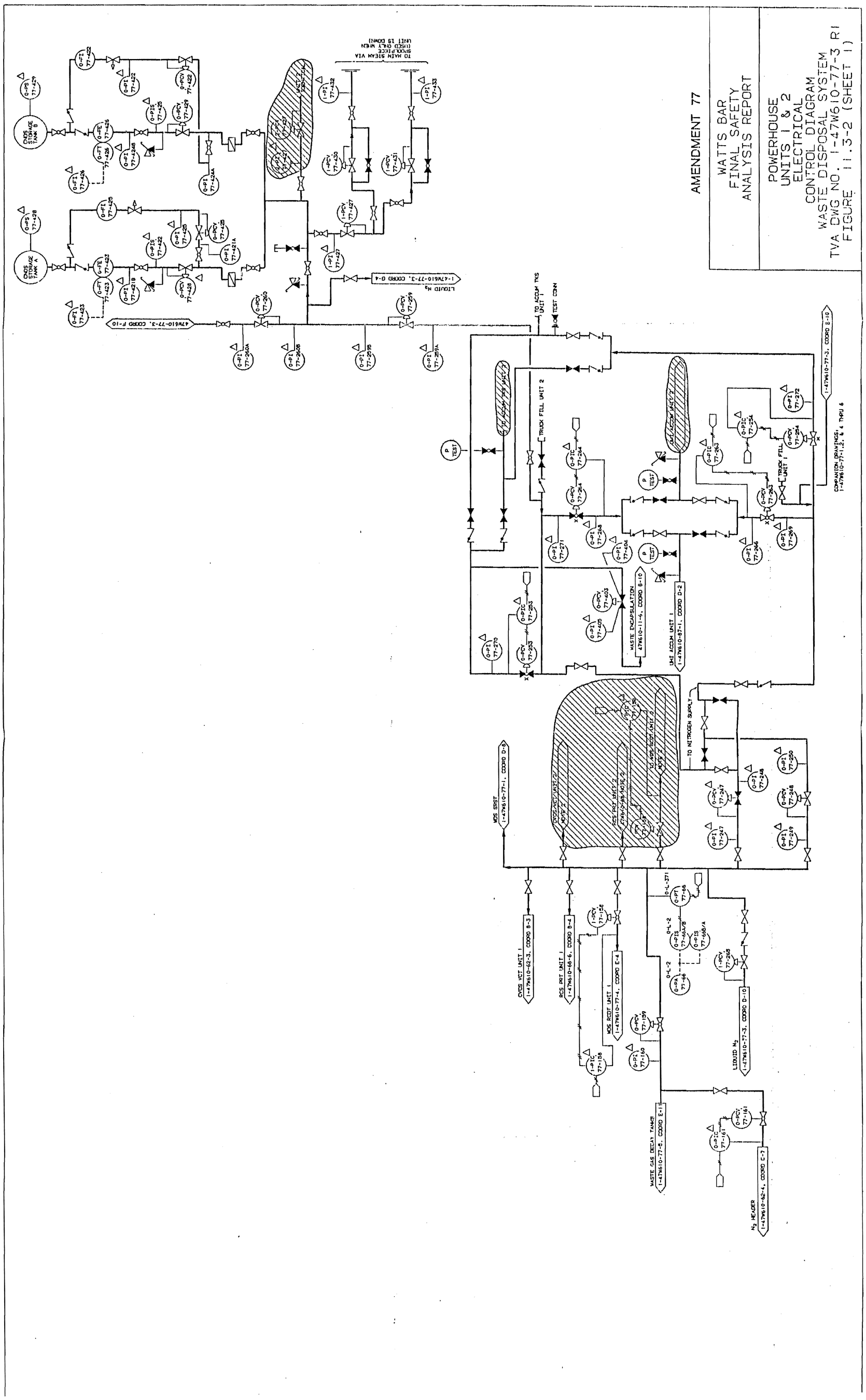

Figure 11.3-2 Powerhouse Units 1 & 2 Electrical Control Diagram Waste Disposal System (Sheet 1)

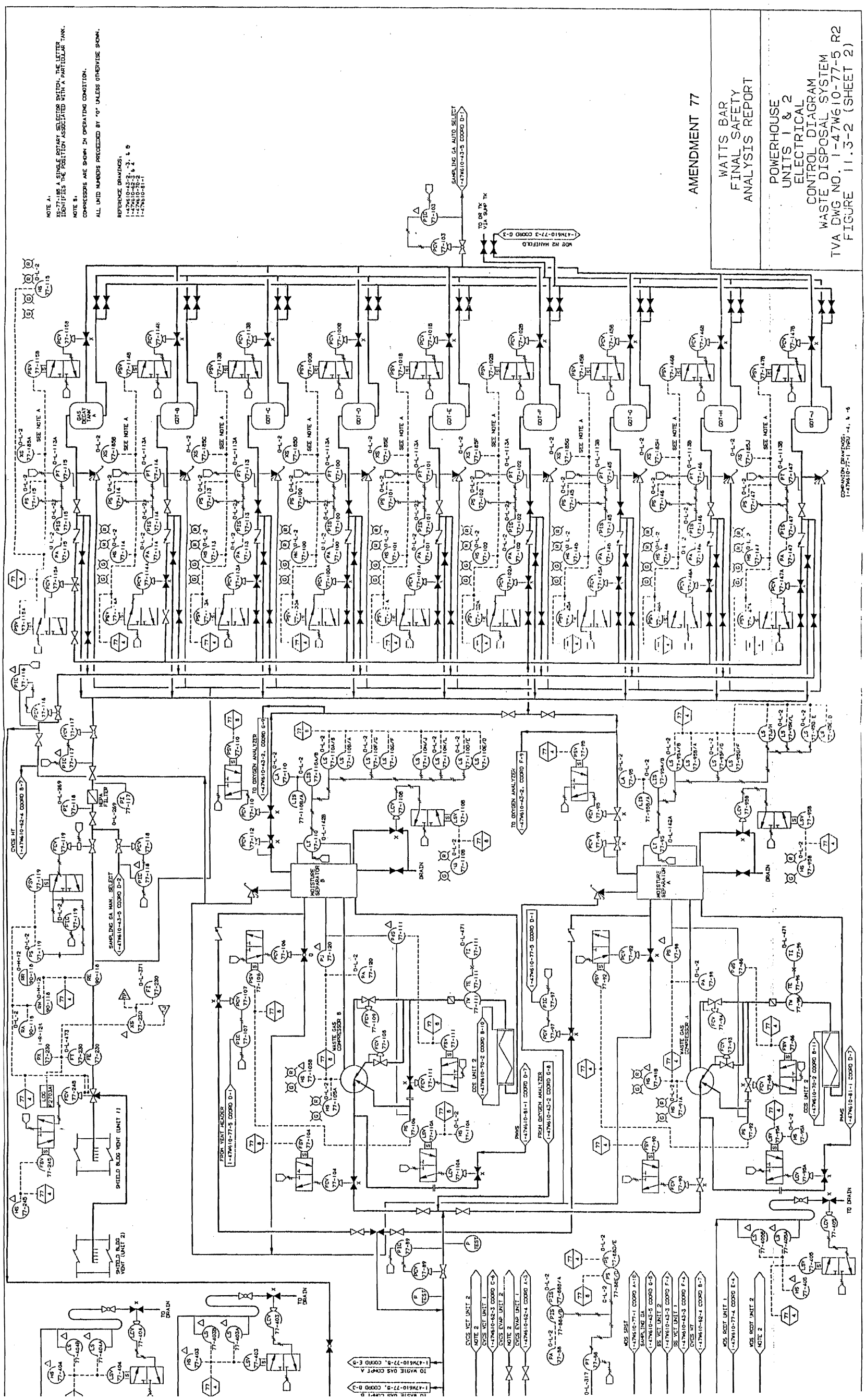

Figure 11.3-2 Powerhouse Units 1 & 2 Electrical Control Diagram Waste Disposal System (Sheet 2)

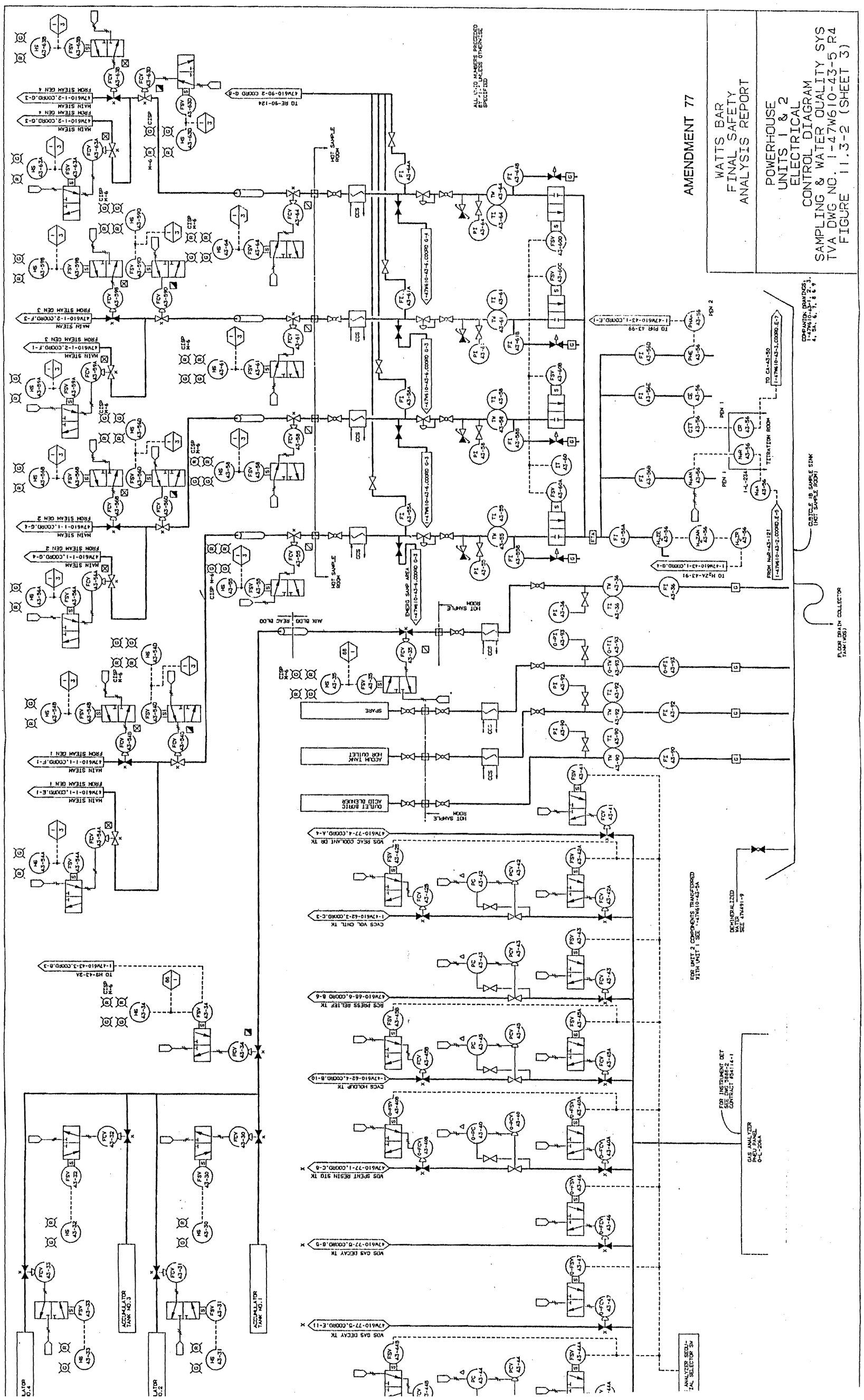

Figure 11.3-2 Powerhouse Units 1 & 2 Electrical Control Diagram Sampling & Water Quality System (Sheet 3)

THIS PAGE INTENTIONALLY BLANK

11.4 PROCESS AND EFFLUENT RADIOLOGICAL MONITORING AND SAMPLING SYSTEM

Means are provided for monitoring the following during normal operation including anticipated operational occurrences: the reactor containment atmosphere, the spent fuel pool, various process streams, process effluent and ventilation flow discharge paths, and control room ventilation intake air. Some of the monitors, including the monitors on the control room air intake, perform a function during accident conditions. Methodologies associated with measuring, evaluating, and reporting radioactivity in releases of radioactive materials (as discussed in RG 1.21) are addressed in the Offsite Dose Calculation Manual (ODCM).

11.4.1 Design Objectives

The process and effluent radiological monitoring systems are designed to perform these basic functions:

(1) Give warning of a condition which might lead to radioactivity releases that could result in exceeding the limits set forth in 10 CFR 20, 10 CFR 50 and 10 CFR 100.

(2) Warn plant personnel of increasing radiation levels which might result in a radiation health hazard.

(3) Rapidly provide information on fuel clad and equipment failures or malfunctions.

(4) Provide a means of radioactive fluid leakage detection.

(5) Perform, during accident conditions, the functions detailed below. All of the monitoring systems provided to meet these objectives function during normal operation.

Several of the monitors have a function during LOCA conditions. Two of the monitors provide redundant isolation of the purge system. If environmental conditions inside the containment during accident conditions permit, the containment particulate and radiogas detector units may be placed on line to monitor the containment atmosphere activity levels. Component cooling system (CCS) water, which removes heat from the recirculation water, is monitored during normal and accident conditions. The Main Control Room (MCR) air inlet monitors have a function described in Section 6.4 assuring compliance with GDC 19.

All monitors which initiate isolation functions that are essential for mitigating accident conditions are seismically qualified. All process monitors are either indicated,or recorded, and annunciated locally or in the MCR. All monitors have instrument malfunction and high radiation visual and audible annunciation in the MCR.

11.4.2 Continuous Monitors

Continuous monitors are a group of monitors from which samples of various key points can be taken on a countinuing basis during normal operation of the monitor in lieu of intermittent sampling from the monitor or through grab samples. The process monitors and operational characteristics are listed in Table 11.4-1 (liquid monitors) and Table 11.4-2 (gaseous monitors). The operational characteristics listed include detector type and range.

11.4.2.1 Liquid Monitors

All process liquid monitors, except theTurbine Building sump discharge monitor, indicate and record activity on MCR Panel 0-M-12. These monitors provide inputs to the Intergrated Computer System (ICS) for monitoring and recording purposes. All monitors initiate visual (annunciator window) and audible alarms on high radiation and instrument malfunction in the MCR. All monitors have individual power supplies compatible with detector voltage requirements. The Turbine Building sump discharge monitor has local indication of activity. The detector location and type, monitor sensitivity and range, etc., of each off-line liquid process monitor are listed in Table 11.4-1.

11.4.2.1.1 Waste Disposal System Liquid Effluent Monitor

This monitor continuously monitors batch releases from the waste disposal liquid released from the plant from the three waste condensate tanks, cask decontamination collection tank, chemical drain tank, two laundry tanks, CVCS monitor tank, two distillate tanks, and condensate demineralizer waste evaporator blowdown tank. This effluent line is not in continuous service. The monitor assembly consists of a gamma scintillation detector and preamplifier; a sample pump; and appropriate flow instrumentation. In the event of a high-radiation or instrument malfunction signal, automatic closure of the effluent discharge valve is initiated to prevent release to the environment.

The waste disposal system liquid effluent monitor setpoints are established using the methodology provided in the Offsite Dose Calculation Manual (ODCM).

11.4.2.1.2 Essential Raw Cooling Water Effluent Monitors

Essential raw cooling water effluent is continuously monitored to ensure radioactivity is not released to the cooling tower basin. These monitors serve as accident monitors to detect leakage from either the component cooling heat exchangers or containment spray heat exchangers (during accident). Each monitor assembly consists of a sample pump, two gamma scintillation detectors and preamplifiers measuring the same range, and appropriate flow instrumentation. Significant activity in the ERCW is indicated by an alarm in the MCR, at which time the operator will determine appropriate action. Each monitor assembly is supplied from separate trained Class 1E power supply.

Setpoints are established using the methodology provided in the ODCM.

11.4.2.1.3 Component Cooling System Liquid Effluent Monitors

Each monitor continuously monitors downstream of its respective component cooling heat exchanger for activity levels indicative of a reactor coolant leak from either the RCS or RHR systems. Each monitor assembly consists of a gamma scintillation detector and preamplifier, and appropriate flow instrumentation. In the event of a high radiation signal, automatic closure of the component cooling surge tank vent line from each surge tank is initiated to prevent gaseous activity release. Significant activity in the component cooling water is indicated by an alarm in the MCR. The setpoint is based on background levels and maximum limits.

11.4.2.1.4 Steam Generator Blowdown Effluent Monitor

This monitor samples the steam generator blowdown. A high activity level is indicative of a primary to secondary leak. The monitor assembly consists of a sample pump; two gamma scintillation detectors and preamplifiers measuring the same range; and appropriate flow instrumentation. A high radiation signal from either detector diverts flow from the cooling tower blowdown line to the condensate demineralizer system. Monitor setpoints are established using the methodology provided in the Offsite Dose Calculation Manual (ODCM).

11.4.2.1.5 Condensate Demineralizer Regenerant Effluent Monitor

Two kinds of wastes are produced in the process of regeneration of condensate demineralizer resins. There are (1) high crud, low conductivity wastes, and (2) low crud, high conductivity wastes. The two kinds of wastes are normally segregated by collecting each kind in separate tanks. Each tank is sampled in accordance with the requirements of the ODCM before discharge to determine whether release of the tank contents will result in acceptable concentrations of radioactivity in the cooling tower blowdown. See Section 11.2 for operation of the condensate demineralizer.

The discharge flow is monitored with the Condensate Demineralizer Regenerant Effluent Monitor. The monitor assembly consists of a sample pump, a gamma scintillation detector, preamplifier, and appropriate flow instrumentation. Monitor setpoints are established using the methodology provided in the ODCM. If the monitor setpoint is reached, the discharge is automatically stopped.

11.4.2.1.6 Turbine Building Sump Effluent Monitor

The turbine building sump effluent monitor continuously monitors the turbine building sump water. The monitor consists of a detector assembly (gamma scintilation detector) and preamplifier submerged in the sump and a skid containing a ratemeter and alarm/indication instrumentation.

The monitor output is indicated at the monitor skid. Detection of a high radiation or instrument malfunction condition is annunciated in the main control room and indicated at the monitor skid. Monitor setpoints are established using the methodology provided in the ODCM.

11.4.2.2 Gaseous Monitors

The range, location, and type of each monitor are listed in Table 11.4-2. The location of indications, recordings, and alarm annunciators for each monitor is given in Table 11.4-3.

11.4.2.2.1 Waste Gas Holdup System Effluent Monitor

This in-line monitor (beta scintillation detector and preamplifier) continuously monitors the gaseous release from the waste gas decay tanks and initiates closure of the gas decay tank vent on a high activity signal.

Gas decay tanks are sampled and analyzed in accordance with the ODCM prior to release. The maximum release rates and monitor setpoints are established using the methodology provided in the ODCM.

11.4.2.2.2 Condenser Vacuum Air Exhaust Monitors

Three monitors providing one low-range channel, one mid-range channel, and one high-range channel with overlapping ranges are used. These monitors, except as described in this section, continuously sample the condenser vacuum pump exhaust to monitor radioactive gas concentrations and to provide an indication of primary to secondary leakage. Upon increased noble gas activity, a portable sampler could be put in place to provide means to quantity any particulate or iodine effluent. If there is a steam generator tube rupture, alternate means, such as recent primary and secondary system lab analysis, can be used to conservatively estimate particulate and iodine releases through the Condenser Vacuum Exhaust. The monitor containing the low-range channel consists of a sample pump; beta scintillation detector and preamplifier; and appropriate control valves, indicators, and instrumentation. The monitor containing the mid-range channel consists of a shine detector made up of a Geiger–Mueller tube, while the high range channel consists of a shine detector made up of a gamma ionization chamber. The low-range monitor will detect very low levels of primary-to-secondary leakage. Low-range monitor setpoints are established using the methodology provided in the ODCM.

Representative samples for the condenser vacuum pump exhaust are obtained via sampling manifolds that extend completely across the 12-inch-diameter exhaust duct. The gas sample enters the manifold through four upstream facing holes that are uniformly spaced along the cylindrical surface of the manifold. The particulate and iodine sample probe consists of two nozzles appropriately spaced in the duct to draw a representative sample.

The low-range, mid-range and high-range monitors indicate, annunciate, and record in the main control room. Prior to achieving a vacuum in the Main Condenser (6.5 inches Hg absolute), the high condenser vacuum exhaust (CVE) flow drives water into the CVE Radiation Monitors. Since the CVE Radiation Monitors contain components sensitive to water (i.e., carbon pump vanes), the monitors cannot be operated until a vacuum is achieved in the condenser. As an alternate measure to identify and assess

steam generator tube leaks, one of the Steam Generator Blowdown Monitors is used in conjunction with sampling provisions in the Offsite Dose Calculation Manual (ODCM). If the normal range CVE Radiation Monitor is not available, the radioactive effluent through the condenser vacuum exhaust is assessed under the sampling provisions in the ODCM.

In the unlikely event of a steam generator tube rupture during the time the CVE Monitors are not operating, the tube rupture is identified by the Main Steam Radiation Monitors or applicable sampling and surveys. In addition, the steam activity, as determined by the Main Steam Radiation Monitors, can be used in conjunction with the quantity of steam entering the condenser to determine the amount of radioactivity released through the condenser vacuum exhaust.

When the Condenser Vacuum system is still in service after a turbine trip, condenser in-leakage increases, initiating a spurious low flow alarm in the CVE radiation monitor, 1,2-RE-90-119. Manual valves at the radiation monitor can be adjusted to reset the flow switch and enable the monitor to detect a low flow condition. Upon return to full power, the valves are again adjusted to reset the flow switch for the normal flow condition.

11.4.2.2.3 Spent Fuel Pool Accident Radiation Monitors

These monitors continuously monitor the fuel pool area. Two Geiger-Mueller tubes with preamplifiers are mounted above the fuel pool. A high radiation signal initiates auxiliary building ventilation isolation. In additon, a high radiation signal from these monitors during refueling operations with containment and/or the annulus open to the Auxiliary Building ABSCE spaces will result in a Containment Vent Isolation (CVI). The two fuel pool monitors are supplied from separate Class 1E power supplies.

The monitor setpoint is selected to prevent exceeding a significant fraction of the 10 CFR 100 limits subsequent to a fuel handling accident in the Auxiliary Building. It will allow an ample factor for this contribution to the total exposure rate from other sources in the spent fuel pit. These monitors are safety related.

11.4.2.2.4 Ventilation Monitors and Containment Atmosphere Monitors

Containment Building Lower Compartment Air Monitor and Containment Building Upper Compartment Air Monitor

During normal operation one monitor assembly continuously samples the upper compartment while the other monitor assembly continuously samples the lower compartment of the reactor containment. Redundant isolation valves are provided on the intake and discharge lines for containment isolation. The two monitor assemblies are powered from separate trains of Class 1E power and are interconnected by stainless steel tubing outside of containment through a normally closed manual isolation valve to allow continuous containment monitoring in case one monitor assembly malfunctions. This arrangement allows for containment monitoring to continue should one monitor assembly malfunction (i.e., monitoring of the lower compartment via the upper compartment monitor). These monitor assemblies also

serve as a part of the leakage detection system (see Section 5.2.7). The lower compartment monitor assembly contains a particulate and a gas detector channel, while the upper compartment monitor assembly contains a particulate, a gas, and an iodine detector channel. The gas and particulate channel setpoints are based on a baseline leak of 1% reactor coolant mass per day for 6 months. The iodine channel setpoint is set high to avoid spurious alarms.

Expected airborne radioactivity concentrations in the containment building lower compartment are given in Table 12.2-19.

Shield Building Exhaust Monitor

The Shield Building Vent Wide Range Gas Monitor (WRGM) continuously samples the exhaust from the shield building vent to measure radionuclide release concentrations. The effluent stream is sampled by an isokinetic sampling probe assembly. The nozzles are arranged so that a representative sample of the effluent stream is taken.

The WRGM sample detection skid consists of two sampling flow paths: high-flow-rate in the low-activity range and low-flow-rate path in the high-activity range. The low-range path contains a single low-range detector while the high-range path contains two detectors, one for mid-range and another for high-range. The three detector channels each have a 6 decade span. The three channels provide 12 decades of range with overlap between channels.

The WRGM has a sample conditioning skid installed upstream of the sample detection skid. This skid provides representative particulate and iodine grab samples for laboratory analysis and filters out large concentrations of radioiodines and particulates to prevent contamination of the gas monitor. Sample flow through the filters and grab samplers may be started and stopped locally or at the sample control assembly in the main control room.

Controls, indication, and trend recording for the WRGM are provided at the control and indication assembly in the Main Control Room. Trend recording is provided for low, mid, and high-range activity levels, as well as total effluent release rate.

The sample flow to the WRGM is controlled by the Shield Building vent flow monitoring equipment. This equipment consists of thermal dispersion array flow elements mounted in each of the process ducts feeding into the shield building stack. The individual flow rates are totaled and the sample flow to the WRGM is controlled to remain isokinetic to the Shield Building stack flow in the normal operating range of 7,200 to 14,000 scfm. The total flow value is provided to the WRGM to allow the calculation of effluent release rate, which is trended in the Main Control Room.

Typical airborne radioactivity concentrations in the Containment Building and instrumentation room are given in Tables 12.2-19 and 12.2-22. The noble gas values in these tables are typical of concentrations that will be monitored by the gas detector of the Shield Building vent monitoring system.

Low range gas channel monitor setpoints are established using the methodology provided in the ODCM.

A continuous tritium sampler (U1 and U2 Shield Buildings) collects gaseous effluent tritium samples from the isokinetic sampling probe. These samples are collected for laboratory analysis.

Auxiliary Building Vent Monitor

The Auxiliary Building vent monitor assembly continuously monitors the Auxiliary Building Vent stack exhaust for radioactivity. The effluent stream is sampled by an isokinetic sampling probe assembly fitted with 72 sample nozzles. The nozzles are arranged such that a representative sample of the effluent stream is taken. The monitor consists of a particulate, gas, and iodine channel. The monitor noble gas and particulate detectors are beta scintillators. The iodine detector is a gamma scintillator. Particulate and iodine filters are available for laboratory analysis.

A continuous tritium sampler collects gaseous effluent tritium samples from the isokinetic sampling probe. These samples are collected for laboratory analysis.

Expected concentrations are given in Table 12.2-21. Monitor setpoints for the gas channel are established using the methodology provided in the ODCM. Setpoints for the particulate and iodine channels will be based on plant personnel protection requirements.

Service Building Ventilation Monitor

The Service Building Vent monitor assembly continuously monitors the Service Building ventilation exhaust for the presence of radioactivity. The monitor consists of a gas channel. The monitor noble gas detector is a beta scintillator. Particulate and iodine filters are available for laboratory analysis.

Activity concentrations in the Service Building ventilation flow are expected to normally be low.

Monitor setpoints for the gas channel are established using the methodology provided in the ODCM. Particulate and iodine real time monitoring is not required.

11.4.2.2.5 Main Control Room Air Intake Monitors

Two redundant safety-related monitor assemblies continuously monitor the normal intake air to the Main Control Room for an indication of abnormal airborne activity. The monitor assemblies are powered from separate Class 1E power trains. In the event of an alarm condition in the normal intake, the monitors initiate Main Control Room isolation and the Control Room HVAC cleanup unit. Two redundant safety-related monitor assemblies are installed to monitor radiation levels in the Main Control Room Emergency Air Intake. The operator can select the cleanest air flow path by comparing indications from the normal and emergency air intake monitors. Each monitor assembly consists of a sample pump, beta scintillation detector and preamplifier, and

appropriate valves and flow instrumentation. The activity is indicated, recorded, and annunciated (instrument malfunction or high radiation) in the Main Control Room.

The monitor setpoint for control room isolation is based on a steam generator tube rupture event. This is more limiting than a fuel handling accident or a LOCA.

11.4.2.2.6 Containment Purge Air Exhaust Monitors

These monitor assemblies continuously monitor the containment purge air exhaust for an indication of abnormal containment airborne radioactivity. Redundant monitor assemblies are provided and are powered from separate Class 1E power trains. In the event of an alarm condition, the monitors initiate containment ventilation isolation. In addition a high radiation signal from these monitors during fuel handling operations with containment and/or the annulus open to the Auxiliary Building ABSCE spaces will result in a Containment Vent Isolation (CVI) and result in isolation of the Auxiliary Building and start of the ABGTS. Each monitor assembly consists of a sample pump, beta scintillation detector and preamplifier, appropriate valves and indicators, and a log ratemeter. The activity is indicated at the monitor assembly and annunciated (instrument malfunction or high radiation) in the Main Control Room.

Setpoint limits for these monitors are provided in plant Technical Specifications. The setpoints are established within the limits using the methodology provided in the ODCM.

11.4.2.2.7 Main Steamline Radiation Monitors

An online radiation monitor is provided for each steam generator which continuously monitors the radioactivity level in the steam lines for detection of significant primary to secondary leakage. The detectors are located adjacent to the main steam lines inside the main steam valve vaults, upstream of the safety valve headers, allowing measurement of the exposure rate of steam released through the safety valves and pressure operated relief valves (PORVs). The detectors are ion chambers and are housed in lead shields which have a single opening facing the main steam lines thus providing a collimated field of view. The detector is shielded in all other directions with a minimum of three inches of lead.

The monitors indicate and annunciate in the MCR. They will measure exposure rates from radionuclides in the main steam lines. This is convertible to a specific activity range which encompasses that specified in Regulatory Guide 1.97, Rev. 2.

11.4.3 SAMPLING

The points subject to periodic sampling are those liquid and gaseous effluent release points expected to contribute a significant portion of the total release and/or dose to a member of the public for the site. A continuous tritium sampler is installed to monitor tritium released through the Auxilliary Building vent stack. The Auxiliary Building tritium sampler is listed in Table 11.4-2. Continuous tritium samplers are installed to monitor tritium released through the Unit 1 and 2 Shield Building vent stacks. The Unit 1 and 2

Shield building tritium samplers are listed in Table 11.4-2. Continuous tritium samplers (Unit 1 and 2 Shield Buildings) collect gaseous effluent tritium samples from the isokinetic sampling probes. These samples are collected for laboratory analysis. These sampling points are defined in the ODCM. The sampling tables in the ODCM list the type of samples required, the frequency and the analysis required for each release point. Radioanalytical sampling instrumentation, sampling frequencies, sampling procedures and lower limits of detection are established to provide assurance that 10 CFR 50 Appendix I, 10 CFR 20, and 40 CFR 190 limits are not exceeded.

11.4.4 CALIBRATION AND MAINTENANCE

The calibration and maintenance procedures for the process monitors are discussed below.

Each detector and/or its associated electronics has a built in mechanism for checking operability. Built-in check sources can be remotely actuated from its ratemeter mounted either locally or in the MCR. The radioactive checksource materials for the normal range gaseous and liquid monitors are listed in Table 11.4-5.

Response checks, calibration checks, and electronic calibration are performed periodically, per the ODCM, Technical Specifications, or maintenance instructions as appropriate. The maximum interval for a complete calibration and performance check for any monitor is 22.5 months (18 months plus 25%).

Maintenance is performed, as necessary, if abnormalities are detected during any of the above checks. Unscheduled maintenance is performed, as required.

Table 11.4-1 Process And Effluent Radiation Monitors - Liquid Media (Page 1 of 2)

Monitor	TVA Instrument No.	Seis. Clas	Location Fl.Elev	Location Bldg.	Amb. Background* mR/hr	Detector Type	Nuclide	Range Min.Det(1) Conc. µCi/cc	Range Max.Det(1) Conc. µCi/cc	Range Scale cpm
Waste Disposal System Liquid Effluent Monitor	0-RE-90-122	I(L)	692.0	Aux.	1.0	Gamma Scint.	Co-60 Cs-137 I-131	9.6(-7) 1.8(-6) 1.5(-6)	1.6(-2) 2.8(-2) 2.4(-2)	$10\text{-}10^7$
Essential Raw (3) Cooling Water Effluent Monitor	0-RE-90-133 0-RE-90-134 0-RE-90-140 0-RE-90-141	I	692.0	Aux.	1.0	Gamma Scint.	Co-60 Cs-137 I-131	9.6(-7) 1.8(-6) 1.5(-6)	1.6(-2) 2.8(-2) 2.4(-2)	$10\text{-}10^7$
Component Cooling (3) System Liquid Effluent Monitor	0-RE-90-123 1-RE-90-123 2-RE-90-123	I(L)	737.0	Aux.	1.0	Gamma Scint.	Co-60 Cs-137 I-131	9.6(-7) 1.8(-6) 1.5(-6)	1.6(-2) 2.8(-2) 2.4(-2)	$10\text{-}10^7$
Condensate Demineralizer Regenerant Effluent Monitor	0-RE-90-225	None	708.0	Turbine Bldg.	5.0	Gamma Scint.	Co-60 Cs-137 Ba-133	6.1(-8) 1.2(-7) 1.2(-7)	1.5(-2) 2.9(-2) 2.8(-2)	$10\text{-}10^7$
Steam Generator Blowdown Effluent Monitor	1-RE-90-120 2-RE-90-120 1-RE-90-121 2-RE-90-121	None	708.0	Turbine Bldg.	1.0	Gamma Scint.	Co-60 Cs-137 I-131	9.6(-7) 1.8(-6) 1.5(-6)	1.6(-2) 2.8(-2) 2.4(-2)	$10\text{-}10^7$

Table 11.4-1 Process And Effluent Radiation Monitors - Liquid Media (Page 2 of 2)

Monitor	TVA Instrument No.	Seis. Clas	Location Fl.Elev	Location Bldg.	Amb. Background* mR/hr	Detector Type	Nuclide	Range Min.Det(1) Conc. µCi/cc	Range Max.Det(1) Conc. µCi/cc	Range Scale cpm
Turbine Building Sump Effluent Monitor	0-RE-90-212	None	685.0	Turbine Bldg.	0.1**	Gamma Scint.	Co-60 Cs-137 I-131	2.5(-8) 8.0(-8) 1.2(-7)	4.7(-8) 1.7(-2) 2.3(-2)	$10\text{-}10^7$

* External Background at which the tabulated minimum detectable concentrations were determined.

** External Background at which the tabulated minimum detectable concentrations were determined under laboratory conditions.

(1) MDC values are based on manufacturer's sensitivity analysis calibration reports, and readout scale under laboratory conditions at the ambient background specified. Min Det Conc. is derived by dividing the manufacturer's detector sensitivity by the detector's response to a known volume of the specified nuclide. Max Det Conc. is derived by dividing the upper range limit of the read out device by the detector's response to a known volume of the specified nuclide. Refer to Watts Bar specific calculations for actual demonstrated range. [9.6(-7) is read 9.6×10^{-7}]

(2) Deleted by Amendment 95

(3) These monitors perform process monitoring for detection of inleakage.

Table 11.4-2 Process And Effluent Radiation Monitors (Page 1 of 4)

Monitor	TVA Instrument No.	Seis. Class	Location Fl. Elev.	Location Bldg.	Amb. Exp. Rate* mR/hr	Detector[10] Type	Nuclide	Sens.[(5)] µCi/cc	Range Max.Det.[(5)] Conc. µCi/cc	Scale cpm
Containment Building Lower and Upper Compartment	1-RE-90-106 1-RE-90-112 2-RE-90-106 2-RE-90-112	I	737.0	Aux.	10.0	Beta Scint.	Xe-133 Kr-85	2.4(-6) 8.8(-7)	4.4(-1) 1.6(-1)	$10\text{-}10^7$
						Beta Scint. (Part.)	Co-60	1.5(-10)	2.3(-5)	$10\text{-}10^7$
Shield Building Exhaust Low and High Range Effluent Monitor	1-RE-90-400 1-RE-90-402 2-RE-90-400 2-RE-90-402	I(L)	729.5	Aux.	10.0	Note (7)	Xe-133	5.0(-8)[(4)]	4.61(4)[(4)]	Digital
Shield Building Exhaust Tritium Sampler	1,2-SMPL-90-801	I(L)	729.0	AEB	1.0	N/A	H-3	N/A	N/A	N/A
Service Building Ventilation Effluent Monitor	0-RE-90-132	None	741.0	Serv.	1.0	Beta Scint.	Xe-133 Kr-85	1.0(-6) 3.8(-7)	4.4(-1) 1.6(-1)	$10\text{-}10^7$
Auxiliary Building Ventilation Effluent Monitor	0-RE-90-101	I(L)	786.0	Aux.	1.0	Beta Scint.	Xe-133 Kr-85	1.0(-6) 3.8(-7)	4.4(-1) 1.6(-1)	$10\text{-}10^7$
						Beta Scint. (Part)	Co-60	5.6(-11)	2.3(-5)	$10\text{-}10^7$
						Gamma Scint. (Iodine)	I-131	2.3(-3)µCi	3.7(2)µCi	$10\text{-}10^7$
Auxiliary Building Exhaust Tritium Sampler	0-SMPL-90-800	I(L)	786.0	Aux	1.0	N/A	H-3	N/A	N/A	N/A

Table 11.4-2 Process And Effluent Radiation Monitors (Page 2 of 4)

Monitor	TVA Instrument No.	Seis. Class	Location Fl. Elev.	Location Bldg.	Amb. Exp. Rate* mR/hr	Detector[10] Type	Nuclide	Sens.[(5)] µCi/cc	Range Max.Det.[(5)] Conc. µCi/cc	Scale cpm
Main Control Room Air Intake Monitors	0-RE-90-125 0-RE-90-126 0-RE-90-205 0-RE-90-206	I	755.0	Cont.	1.0	Beta Scint.	Xe-133 Kr-85	3.5(-7) 1.3(-7)	4.4(-1) 1.6(-1)	$10\text{-}10^7$
Waste Gas Holdup System Gas Effluent Monitor	0-RE-90-118	I(L)	692.0	Aux.	1.0	Beta Scint.	Kr-85	4.4(-4)	2.1(2)	$10\text{-}10^7$
Waste Gas effluent[(6)] Part. & Iodine	0-RE-90-128	I(L)	692	Aux.	N/A	Sampler	NA	NA	NA	NA
Condenser Vacuum Low Range Air Exhaust Effluent Monitor	1-RE-90-119 2-RE-90-119	None	708.0	Turb.	1.0	Beta Scint.	Xe-133 Kr-85	3.5(-7) 1.3(-7)	4.4(-1) 1.6(-1)	$10\text{-}10^7$
Condenser Vacuum Air Exhaust Post Accident Effluent Monitor	1-RE-90-404	None	708.0	Turb.	1.0	Geiger-Mueller Tube	Xe-133 Kr-85	1.3(-4) 8.3(-4)	1.4(5) 5.2(5)	Digital
Condenser Vacuum Air Exhaust Post Accident Effluent Monitor	2-RE-90-255	I(L)	708.0.	Turb.	1.0	Geiger-Mueller Tube	Xe-133 Kr-85	10(-1)* mR/hr	10(4)* mR/hr	10-10(7) cpm
	2-RE-90-256	I(L)	708.0	Turb.	1.0	Ion Chamber	Xe-133 Kr-85	10(2)* mR/hr	10(7)* mR/hr	10-10(7) cpm

*Minimum and Maximum Detectable Range for these monitors. Sensitivity to be provided upon completion of MFG Testing.

Table 11.4-2 Process And Effluent Radiation Monitors (Page 3 of 4)

Monitor	TVA Instrument No.	Seis. Class	Location Fl. Elev.	Location Bldg.	Amb. Exp. Rate* mR/hr	Detector[10] Type	Nuclide	Sens.[(5)] µCi/cc	Range Max.Det.[(5)] Conc. µCi/cc	Scale cpm
Containment Purge Air Exhaust Effluent Monitor	1-RE-90-130 1-RE-90-131 2-RE-90-130 2-RE-90-131	I	713.0	Aux.	1.0	Beta Scint.	Xe-133 Kr-85	9.7(-6) 3.6(-6)	1.0(1) 3.7(0)	10-10
Main Steamline Radiation Monitors	1-RE-90-421 1-RE-90-422 1-RE-90-423 1-RE-90-424 2-RE-90-421 2-RE-90-422 2-RE-90-423 2-RE-90-424	I(L)	729.0	Aux.	-	Ion Chamber	Total gas	7.3(-2)[(4,8)] µCi/cc	1.35(4)[(4,9)] µCi/cc	Digital
Fuel Pool Radiation Monitor	0-RE-90-102 0-RE-90-103	I	757.0	Aux.	10.0	Geiger-Mueller Tube	-	10^{-1} mR/hr	10^{4} mR/hr	1.0(-1) - 1.0(4) mR/hr

Table 11.4-2 Process And Effluent Radiation Monitors (Page 4 of 4)

Monitor	TVA Instrument No.	Seis. Class	Location Fl. Elev.	Location Bldg.	Amb. Exp. Rate* mR/hr	Detector[10] Type	Nuclide	Sens.[(5)] µCi/cc	Range Max.Det.[(5)] Conc. µCi/cc	Scale cpm

NOTES

(1) Deleted

(2) Deleted

(3) Deleted

(4) WBN-APS3-048

(5) With the exception of monitors RE-90-421 through -424, Sens. and MDC values are based on manufacturer's sensitivity analysis calibration reports, and readout scale under laboratory conditions at the ambient background specified. Sensitivity, as show in this table, is derived by dividing the manufacturer's detector sensitivity by the detector's response to a known volume of the specified nuclide. Max Det Conc. is derived by dividing the upper range limit of the read out device by the detector's response to a known volume of the specified nuclide. Refer to Watts Bar specific calculations for actual demonstrated range. [1.3(-10) is read 1.3×10^{-10}]. Units are µCi/cc except where specifically indicated as mR/Hr.

(6) Deleted

(7) 1,2-RE-90-400 use beta scintillation and CdTe detectors. 1,2-RE-90-402 are samplers and require no detectors.

(8) Pre-shutdown normal

(9) Post accident

(10) Detector types, nuclides, and ranges are for gas detectors unless noted otherwise.

* External background at which the tabulated minimum detectable concentrations were determined.

Table 11.4-3 Locations For Gaseous Process And Effluent Radiation Monitor Indicators, Recorders, And Annunciators (Page 1 of 2)

				Alarm Annunciation			
				Visual		Audible	
Monitor	TVA Inst. Number	Indicator	Recorder	High Rad.	Instr. Fail	High Rad.	Instr. Fail
Containment Building Lower and Upper Compartment	1-RE-90-106 1-RE-90-112 2-RE-90-106 2-RE-90-112	0-M-12	0-M-12	0-M-12	0-M-12	0-M-12	0-M-12
Shield Building Vent Normal Range	1-RE-90-400 2-RE-90-400	1-M-30 2-M-30	1-M-30 2-M-30	1-M-30 2-M-30	0-M-12 0-M-12	1-M-30 2-M-30	0-M-12 0-M-12
Service Building Vent Monitor	0-RE-90-132	0-M-12	0-M-12	0-M-12	0-M-12	0-M-12	0-M-12
Auxiliary Building Vent Monitor	0-RE-90-101	0-M-12	0-M-12	0-M-12	0-M-12	0-M-12	0-M-12
Main Control Room Air Intake Monitors	0-RE-90-125 0-RE-90-126 0-RE-90-205 0-RE-90-206	0-M-12	0-M-12 0-M-12 ICS ICS	0-M-12	0-M-12	0-M-12	0-M-12
Waste Gas Holdup System Gas Effluent	0-RE-90-118	0-M-12	0-M-12	0-M-12	0-M-12	0-M-12	0-M-12
Condenser Vacuum Pump Low-range Air Exhaust	1-RE-90-119 2-RE-90-119	0-M-12	0-M-12	0-M-12	0-M-12	0-M-12	0-M-12
Condenser Vacuum Vent Post-Accident	1-RE-90-404 2-RE-90-255 2-RE-90-256	1-M-30 2-M-30	1-M-30 2-M-30	1-M-30 2-M-30	0-M-12 0-M-12	1-M-30 2-M-30	0-M-12 0-M-12

Table 11.4-3 Locations For Gaseous Process And Effluent Radiation Monitor Indicators, Recorders, And Annunciators (Page 2 of 2)

				Alarm Annunciation			
				Visual		Audible	
Monitor	TVA Inst. Number	Indicator	Recorder	High Rad.	Instr. Fail	High Rad.	Instr. Fail
Containment Purge Air Exhaust	1-RE-90-130 1-RE-90-131 2-RE-90-130 2-RE-90-131	Local	None	0-M-12	0-M-12	0-M-12	0-M-12
Fuel Pool Accident Radiation Monitor	0-RE-90-102 0-RE-90-103	0-M-12	ICS ICS	0-M-12	0-M-12	0-M-12	0-M-12
Main Steamline Radiation Monitors	1-RE-90-421 1-RE-90-422 1-RE-90-423 1-RE-90-424	1-M-30	ICS ICS ICS ICS	1-M-30	0-M-12	1-M-30	0-M-12
	2-RE-90-421 2-RE-90-422 2-RE-90-423 2-RE-90-424	2-M-30	ICS ICS ICS ICS	2-M-30	0-M-12	2-M-30	0-M-12

Table 11.4-4 Deleted by Amendment 49

Table 11.4-5 Process Monitors Check Source Description

Type of Monitor	Source Manufacturer	Source Material
Off-Line Liquid Monitor	Gulf Electronic Systems	Cs-137
Off-Line and In-Line Gas Monitors*	Gulf Electronic Systems	Cl-36
	Eberline	Cs-137
	Eberline	Sr-90
Area Monitors (Geiger-Mueller Detectors)	Gulf Electronic Systems	Cl-36
Wide Range Gas Monitor	Sorrento Electronics	Cl-36
		Cs-137
On-Line Liquid Monitor	General Atomics	Ba-133

* High sensitivity monitors 0-RE-90-125, -126, -205, -206, and 1,2-RE-90-119 use a LED check source.

THIS PAGE IS INTENTIONALLY LEFT BLANK

11.5 SOLID WASTE MANAGEMENT SYSTEM

11.5.1 Design Objectives

The slurries and solid radwaste (including resin waste) produced by WBN Units 1 and 2 is prepared for shipment or for temporary onsite storage in compliance with the requirements in 10 CFR 61, 10 CFR 71, and 49 CFR 171, 172, 173, 177, and 178. Solid wastes are processed by the Solid Waste System (SWS) which is located in a seismic Category I structure. The waste packaging area, divided into three sections by thick concrete walls is composed of the mobile demineralizer (MD) area, an area for high level storage and an area for low level dry active wastes (DAW). Radiological monitoring is provided for the waste packaging area as described in Chapter 12.

For further information on design codes and safety classes, see Section 3.2.

11.5.2 System Inputs

Waste inputs are divided into two categories: (1) Dry Active Waste (DAW) and (2) Wet Active Waste (WAW). DAW and WAW are products of the plant operation and maintenance. DAWs are further subdivided into compactible and noncompactible wastes. Solid compactible wastes include paper, clothing, rags, mop heads, rubber boots, and plastic. Non-compactible wastes include tools, mop handles, lumber, glassware, pumps, motors, valves, and piping.

Wet active wastes are primarily composed of spent resins. The sources for spent resins are the spent resin storage tank, the mobile demineralizer, and Condensate Polisher Demineralizer System (CPDS).

A list of inputs and expected yearly volumes of solid wastes are provided in Table 11.5-1. Table 11.5-2 provides a list of major nuclides activity to be shipped on a yearly basis.

11.5.3 Systems Description

11.5.3.1 Wet Active Waste Handling

Spent Resin Processing

A system for packaging and dewatering bulk quantities of spent resin for shipment is shown in Figure 11.5-1. The shipping container consists of an inner disposable High integrity container (HIC) with an outer returnable shield. Filter elements are mounted inside the HIC near the bottom and are connected to a hose connection outside the shield to facilitate dewatering spent resins. The container also has fill and vent connections.

Several types of shipping casks may be used. Most of these are vertical cylinders, having capacities of 120 ft^3 to 215 ft^3. If spent resins are classified as low-specific activity (LSA) material as defined in Federal Regulations 10 CFR Part 71 and is transported as exclusive use, the spent resins may be shipped in a container/cask that

is not licensed by NRC. The shipping container/cask for LSA material shall meet the requirements of Federal Regulations 49 CFR Parts 171-178. If the spent resins do not meet the LSA material requirements, the shipping container/cask shall be licensed by NRC in accordance with Federal Regulations 10 CFR Part 71.

The SRST may be processed to either a cask or a Rad-Vault. Loading is accomplished with the cask mounted on a truck or trailer bed. The truck or trailer or Rad-Vault is located in the Auxiliary Building railroad bay. The cask or Rad-Vault with HIC is filled from the spent resin tank. The spent resin storage tank is pressurized with nitrogen, and the resin slurry is sluiced to the HIC using water from the Primary Makeup Water (PMW) System. Water is removed from the HIC through the internal filters, and is collected in the tritiated drain collector tank. A pump is used as required to aid the dewatering process. Additional slurry is added to the HIC, and the fill-and-dewatering process is repeated until the level indicator shows that the desired amount of resin has been transferred. The waste is dewatered to meet the free-standing water limitations at licensed disposal facilities, and the liquid effluent is discharged to the tritiated drain collector tank. If the Rad-Vault is used for temporary storage, the HIC will be transferred to the cask prior to shipment off site. Flush connections are provided from the PMW System to flush the resin slurry lines back to the spent resin storage tank.

The resins are sampled for waste characterization per 10 CFR 61. The high integrity containers (HIC) are capped and may be temporarily stored at the site prior to shipment. Temporary onsite storage is provided in the yard east of the CDWE Building and in the Auxiliary Building railroad bay. Primary spent resins are stored only in a shielded container if stored in the yard.

In the event that the HIC were to overflow during the filling process, the overflow would take place through the vent line and the liquid would drain to the tritiated drain collector tank. The strainer in the vent line would prevent overflow of resin.

In certain cases spent resins may be stabilized rather than packaged in a HIC. Resins are stabilized by transfer to a commercial portable solidification unit for solidification (see Section 11.5.4.1).

Spent Resin Inventory

The level indicating system in the spent resin storage tank is a thermal disposition type level probe which measures resin and water level independently. Since the level probe indicates the resin/water interface, the inventory of spent resins in the tank can be determined.

Mobile Demineralizer Resin Processing

Spent resins from the mobile demineralizer system are stored in a Mobile Demineralizer Spent Resin Disposal Container (MDSRDC) to accumulate sufficient resins for disposal off-site. The MDSRDC includes a RAD-Vault with a HIC and is located in the Auxiliary Building railroad bay. The Rad-Vault is a concrete storage container that provides process shielding. Once the HIC is filled, it is transferred for off site disposal. The spent resin may also be transferred to a liner for shipment off site.

Resin slurry is sluiced to the liner/HIC using water. Water removed from the liner/HIC through the internal filters is discharged to the tritiated drain collector tank, and a pump is used as necessary to aid the dewatering process. Additional slurry is added to the container, and the fill-and-dewatering process is repeated until the level indicator shows that the desired amount of resin has been transfered. The waste is dewatered to meet the free-standing water limitations at licensed disposal facilities.

The resins are sampled for waste characterization per 10 CFR 61. The liners/HICs are capped and may be temporarily stored at the site prior to shipment. Temporary onsite storage is provided in the yard east of the CDWE Building and in the Auxiliary Building railroad bay. Spent mobile demineralizer resins are stored only in a shielded container if stored in the yard.

Condensate Polishing Demineralizer Resin Processing

Contaminated spent resins from the CPDS are transferred directly from the storage tank to a disposal liner located in the Turbine Building railroad bay. The resin storage tank is pressurized with air, and the resin slurry is sluiced to the liner using water from the condensate system. Water is removed from the liner through internal filters, and is collected in the high crud tanks. Additional slurry is added to the container, and the fill-and-dewatering process is repeated until the level indicator shows that the desired amount of resin has been transferred. The waste is dewatered to meet the free-standing water limitations at licensed disposal facilities or licensed waste processors. The resins are sampled for waste characterization per 10 CFR 61. The liner is capped and may be temporarily stored at the site prior to shipment. Temporary onsite storage is provided in the yard east of the CDWE Building and in the Auxiliary Building railroad bay. Yard storage is permitted provided the resins are in the final disposal/shipping containers.

11.5.3.2 Dry Active Waste Handling

Dry active waste (DAW) is separated into two types of waste. The two types of waste are those that can be incinerated (incinerable or compactable), and those that cannot be incinerated (non-incinerable or non-compactable). DAW is collected throughout the plant and is brought to the waste packaging area. Here DAW is sorted and temporary stored prior to shipment offsite.

Incinerable Waste

Incinerable waste like paper, clothing, rags, plastic, mop handles, lumber, etc., are collected and then transferred to a shipping container for processing by offsite vendor and disposal.

Non-incinerable Waste

Non-incinerable waste such as tools, valves, motors, etc., are collected and packaged in containers, and are temporary stored. This waste is then sent for processing by an offsite vendor for volume reduction, and disposal or recycle.

11.5.3.3 Miscellaneous Waste Handling

Air and gas filter and prefilter elements and glassware are placed in appropriate containers. Wet radioactive plant filters are packaged, when necessary, in high integrity containers.

If radiation levels of containers are high enough to require shielding, they are loaded into and transported in shielded truck trailers or a cask similar to those used to transport liners containing bulk quantities of dewatered resins.

11.5.4 Equipment Operation

11.5.4.1 Mobile Solidification System (MSS)

The MSS is a portable solidification unit provided by a vendor service contract. The MSS combines and mixes radioactive wastes (resins, concentrates and liquid wastes) with solidification agents and needed additives to solidify the waste. The solidification is done in accordance with a Process Control Program to ensure that each batch of waste is properly solidified. Only solidification agents (such as cement) which have been approved by licensed disposal facilities are used. The waste is solidified in a disposable liner and prepared for shipment or temporary onsite storage. The disposable liners are equipped with internal mixers to provide uniform mixing. The mobile solidification system is located in the Auxiliary Building railroad bay. Necessary connections have been provided in the railroad bay to support the mobile solidification system as shown by Figure 11.5-1.

11.5.5 Storage Facilities

11.5.5.1 Inplant Storage Area

Packaged wastes and unpackaged dry active wastes are stored in designated storage areas until shipment. Designated inplant storage areas include the waste packaging area and the Auxiliary Building railroad bay. The indoor storage for processed wastes and unprocessed DAW provides greater than 30-day storage at expected generation rates. The annual DAW volume for compactible and non-compactible trash as shown in Table 11.5-1 is expected to have an 11.4 curie content. For unprocessed wet wastes the following storage containers are provided:

Spent Resin Storage Tank	300 ft^3
Mobile Demineralizer Spent Resin Disposal Container	180 ft^3
CPDS Storage Tank	441 ft^3
Filter HIC/shielding	96 ft^3

The above unprocessed storage capacities provide greater than 30 days storage at expected generation rates.

11.5.5.2 Outside Radwaste Storage

Operational considerations make it necessary to temporarily store containers of radioactive materials and radioactive wastes in designated areas such as the concrete pad in the east yard outside of the CDWE. Liners of dewatered resin (that have been

processed for imminent shipment offsite) are stored the same as other containers such as drums or boxes. Drums, boxes, and liners of radioactive materials or wastes including DAW may be stored in outside storage areas after being packaged for shipment or storage. The outside storage area provides sufficient storage to accommodate one full shipment of DAW or radioactive materials. The concrete pad cast of the CDWE will also be used to temporarily store (less than 5 years) DAW.

11.5.6 Shipment

Waste is shipped to a commercial disposal site according to federal regulations and disposal site criteria. Waste may also be shipped to a broker/processor to meet federal regulations and disposal site criteria. Drums and boxes containing radwaste are transported to the disposal facility in a sole-use van-type or flatbed truck trailer. Dewatered resins and solidified resins are packaged in liners or HICs and transported in a transportation cask when required. Radioactive waste is packaged and transported in accordance with federal, state and TVA regulations.

Table 11.5-1 Maximum Anticipated Annual Solid Radwaste To Be Processed

Waste Type	Volume (ft^3)
Spent Resins and Other Miscellaneous Wastes	2,530
Filter Cartridges	190
Compactable and Non-compactable Trash	30,000 (Uncompacted)
Irradiated TPC Components	33.5
Contaminated Oil	100
Total	32,853.5

Table 11.5-2 Estimated Major Nuclide Composition

Spent Resins and Other Miscellaneous Wastes

NUCLIDE	NUCLIDE COMPOSITION Curies/Yr
Manganese-54	42
Iron-55	216.9
Cobalt-58	547.3
Cobalt-60	259
Nickel-63	329
Cesium-134	171.5
Cesium-137	214.2
Nickel-59	16.1

Filter Cartridges

NUCLIDE	NUCLIDE COMPOSITION Curies/Yr
Iron-55	5.71
Cobalt-58	3.12
Cobalt-60	9.11
Nickel-63	4.64

TPC Base Plate and Thimble Plug Assemblies

NUCLIDE	NUCLIDE COMPOSITION Curies/Yr
Chromium-51	308
Manganese-54	619
Iron-55	3,890
Cobalt-58	275
Cobalt-60	652
Nickel-63	126

THIS PAGE INTENTIONALLY BLANK

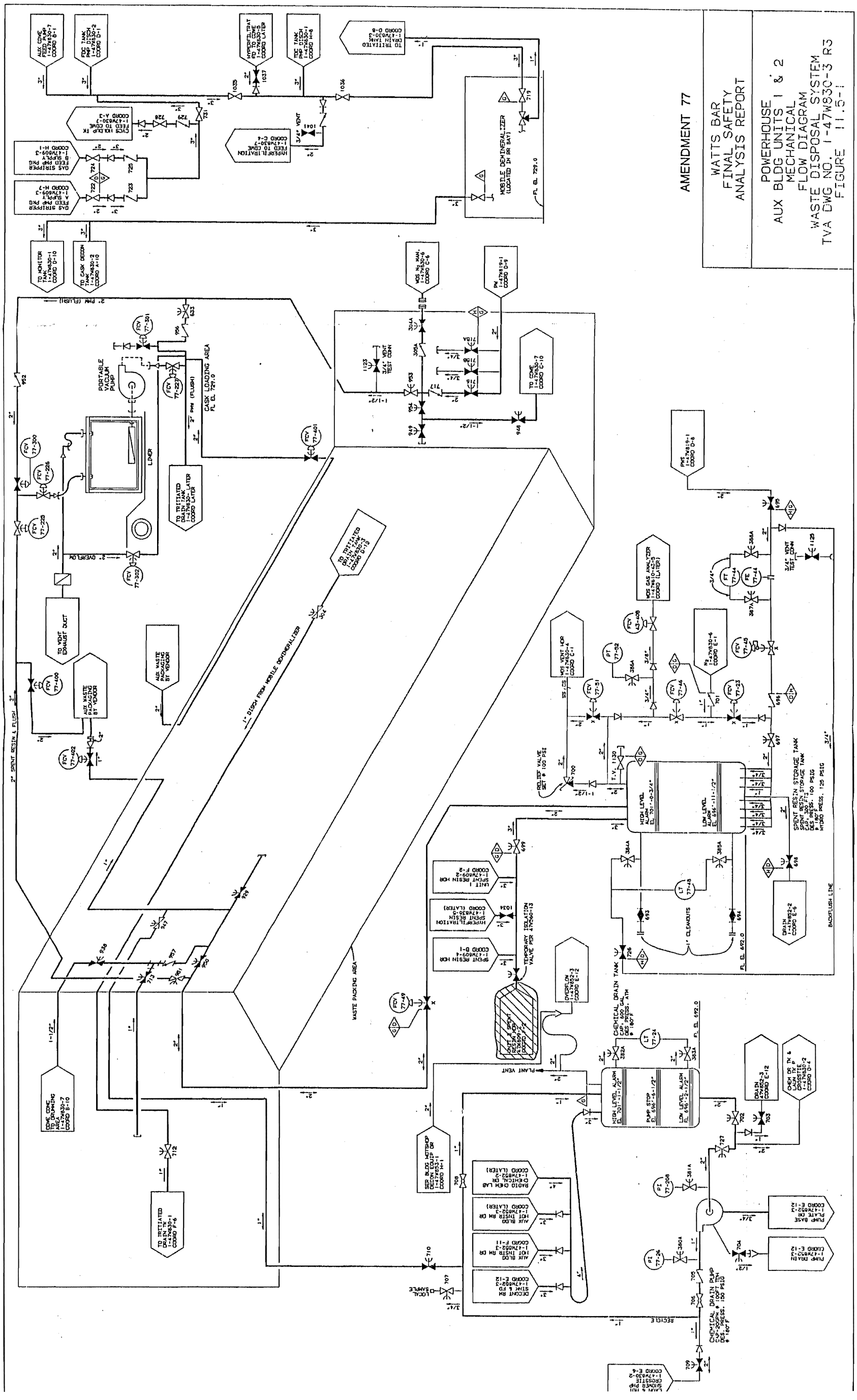

Figure 11.5-1 Powerhouse Aux Bldg Units 1 & 2 Mechanical Flow Diagram Waste Disposal System

THIS PAGE INTENTIONALLY BLANK

11.6 Offsite Radiological Monitoring Program

The preoperational environmental monitoring program has established a baseline of data on the distribution of natural and manmade radioactivity in the environment near the plant site. With this background information, it is possible to determine what contribution, if any, the plant is making to the environment. The preoperational environmental monitoring program was initiated in the Winter of 1976. The operational program is conducted in accordance with the plant Offsite Dose Calculation Manual (ODCM).

In 1986, the operational monitoring program was instituted in anticipation of fuel load at WBN. Fuel load was delayed but the operational monitoring program continued in effect. In 1988, additional delays were announced in the scheduled fuel load date. Consequently, the radiological environmental program was curtailed to a minimum for approximately one year (1989). In 1990, the monitoring program was expanded to include requirements which met or exceeded an operational phase program. The current monitoring program at WBN meets or exceeds the requirements of the ODCM.

Evaluations are made on the basis of the baselines established in the preoperational program, considering geography and the time of the year where these factors are applicable, and by comparisons to control stations where the radioactivity from the station is expected to be negligible. In those cases where a statistically-significant increase in the radioactivity level is seen in a particular sampling vector but not in the control station, meteorology and specific nuclide analysis are used to identify the source of the increase.

The planned sampling frequencies are designed to detect changes in environmental radioactivity. The vectors which would first indicate increases in radioactivity are sampled most frequently. Those which are less affected by transient changes but show long-term accumulations are sampled less frequently. However, specific sampling dates are not crucial and adverse weather conditions or equipment failure may on occasion prevent collection of specific samples.

The capability of the environmental monitoring program to detect design level releases from plant effluents is uncertain because the quantities which will be released will be very small. The program provides the capability of detecting any significant buildup of radioactive material in the environment above and beyond that which is already present. Those vectors which are most sensitive to reconcentration of specific isotopes are sampled. If any increase in radioactivity levels is detected in these vectors, the program is evaluated and broadened if deemed necessary.

From the data obtained from the radioanalytical and radiochemical analyses of the vectors sampled, dose estimates can be made for an individual or the population living near the plant site.

11.6.1 Expected Background

For a number of years measurements of background radiation have been made at various locations throughout the Tennessee Valley Region. TVA has conducted environmental monitoring programs in the vicinity of Oak Ridge, Tennessee, Browns Ferry Nuclear Plant near Athens, Alabama, Sequoyah Nuclear Plant near Soddy Daisy, Tennessee, and near Watts Bar Nuclear Plant. Over periods of not less than two years, the measurements made in these areas have indicated only very slight variations from location to location. The measurements obtained utilizing film badges or thermoluminescent dosimeters have revealed the following background radiation levels: Oak Ridge 110 mR/year, Browns Ferry, Sequoyah, and Watts Bar Nuclear Plants 60-80 mR/year. It could, therefore, be estimated that the expected background levels in the vicinity of the Watts Bar Nuclear Plant will be between 60 and 110 mR/year.

Concentrations of radioactive materials in the atmospheric pathway are essentially background. In general, only naturally occurring radioisotopes have been identified in these media, except following the atmospheric testing of nuclear weapons and following the accident at the Chernobyl Nuclear Power Station. Concentrations in the terrestrial pathway, including milk, soil and vegetables, have likewise consisted primarily of naturally occurring radionuclides with small amounts of Cs-137 and Sr-90. Levels of Cs-137 and Sr-90 are consistent with levels of these isotopes resulting from fallout from atmospheric nuclear weapons testing.

Results from the analysis of aquatic media have indicated the presence of radioactive materials slightly in excess of levels expected from fallout. While increased levels have not been identified in water samples, concentrations of Cs-137 in sediment and fish samples collected above Watts Bar Dam are generally higher than concentrations from samples taken below the dam. In addition, the presence of the activation product Co-60 has been identified in samples from the vicinity of WBN, with the higher concentrations reported in samples taken above Watts Bar Dam. This indicates the presence of radioactive materials in the vicinity of WBN that are the result of other nuclear operations upstream from the plant.

11.6.2 Critical Pathways to Man

Although the amounts of radioactivity added to the environment from plant operation are small, critical exposure pathways to man have been identified in order to estimate the maximum dose to the individual and to establish the sampling requirements for the environmental radioactivity monitoring program. The six principal pathways which can result in radiation exposure to man are:

(1) External exposures to gaseous releases.

(2) Drinking water from the Tennessee River and wells in the immediate vicinity of the plant.

(3) Recreation along the Tennessee River.

(4) Eating fish from the Tennessee River.

(5) Consuming milk produced near the plant.

(6) Eating foods grown in areas adjacent to the plant site affected by the gaseous releases.

The radiological environmental monitoring program, as outlined in the ODCM, is designed to sample media from these critical pathways. Should increased levels of radioactive materials be identified, efforts will be made to identify the reason for the increases. These efforts may include attempts to correlate measured environmental concentrations with concentrations predicted from effluent models or with activities of other nuclear operations in the area.

Environmental concentrations of radioactivity due to releases to unrestricted areas from the Watts Bar Nuclear Plant may be unmeasurable with present techniques. Therefore, methods to calculate the potential exposure to man have been derived for both gaseous and liquid releases.

11.6.2.1 Doses from Gaseous Effluents

The following doses to humans living in the vicinity of the Watts Bar Nuclear Plant are calculated for the releases of radioactive gases:

(1) External beta doses

(2) External gamma doses

(3) Organ doses (inhalation pathway)

(4) Organ doses (ingestion pathways)

The basic assumptions and calculational methods used in computing these doses are described in Subsection 11.3.10.1.

11.6.2.2 Internal Doses from Liquid Effluents

The following doses are calculated for exposures to radionuclides routinely released in liquid effluents:

(1) Internal doses from the ingestion of water

(2) Internal doses from the consumption of fish

(3) External doses from water sports

A detailed description of the basic assumptions and calculational methods used in calculating the doses is given in Subsection 11.2.9.1.

The dose models employed are updated as needed in light of the data resulting from the offsite monitoring program to ensure that all significant pathways are included in the calculations and to ensure that the actual doses received by individuals and the

population as a whole remain as low as reasonably achievable and within the applicable Federal Regulations.

11.6.3 Sampling Media, Locations, and Frequency

The operational environmental radiological monitoring program is outlined in the ODCM. The media selected were chosen on two bases: First, those vectors which would readily indicate releases from the plant, and secondly, those vectors which would indicate long-term buildup of radioactivity. Consideration was also given to the pathways which would result in exposure to man, such as milk and food crops. Locations for sampling stations were chosen after considering meteorological factors and population density around the site. Frequencies for sampling the various vectors were established so that seasonal variation in radioactivity levels might be determined. In addition, samples are collected during the season in which the major growth occurs to ascertain radioactivity uptake by the vectors during their most susceptible period of growth.

11.6.4 Analytical Sensitivity

Samples are collected routinely following established procedures so that uniformity in sampling methods is assured. The samples are transported to a central laboratory facility for preparation and processing. All the radioanalytical and radiochemical analyses are conducted in the central laboratory.

The detection capabilities for environmental sample analyses given as the nominal Lower Limits of Detection (LLD) are listed in the plant ODCM.

11.6.5 Data Analysis and Presentation

TVA participates in an Interlaboratory Comparison Program. This program provides periodic cross-check samples of the type and radionuclide composition normally analyzed in an environmental monitoring program. The results obtained in the monitoring program and the cross-check program are reported annually to the Nuclear Regulatory Commission.

11.6.6 Program Statistical Sensitivity

As previously noted, because of the small quantities of radioactive material which will be released to the environment from the Watts Bar Nuclear Plant, it is uncertain as to what extent the results from the environmental monitoring program can be used to estimate the probable radiation exposure to man. Only if the radioactive waste releases from the plant cause statistically measurable increases of radiation in the environment can dose correlations be made.

Calculations are performed utilizing the more concentrated effluent release data and the models given in Subsections 11.2.9 and 11.3.10 to estimate the possible exposure to man. Because of the conservative assumptions applied in these models, the estimated dose to the population should be higher than that actually received. However, TVA, even using the conservative assumptions, will control the releases of radioactive materials to the environment such that the releases will be less than the limits described in Title 10 Code of Federal Regulations Parts 20 and 50.

REFERENCES

None

THIS PAGE INTENTIONALLY BLANK

11A TRITIUM CONTROL

This section discusses the reduced tritium production in the plant as a result of employing zircaloy clad fuel and silver-indium-cadmium (Ag-In-Cd) control rods.

11A SYSTEM SOURCES

The principal contributors to tritium production within the PWR System are: the ternary fission source, the dissolved boron in the reactor coolant, and Li^7 in the reactor water. Additional small contributions are made by Li^6 and deuterium in the reactor water. Tritium production from different sources is shown in Table 11A-1.

11A.1 The Fission Source

This tritium is formed within the fuel material and may:

(1) Remain in the fuel rod uranium matrix,

(2) Diffuse into the cladding and become hydrided and fixed there,

(3) Diffuse through the clad for release into the primary coolant,

(4) Release to the coolant through macroscopic cracks or failures in the fuel cladding.

Previous Westinghouse design has conservatively assumed that the ratio of fission tritium released into the coolant to the total fission tritium formed was approximately 0.30 for zircaloy clad fuel. The operating experience at the R.E. Ginna Plant of the Rochester Gas and Electric Company, and at other operating reactors using zircaloy clad fuel has shown that the tritium release through the zircaloy fuel cladding is substantially less than the earlier estimates predicted. Consequently, the release fraction may be revised downward from 30 percent to 10 percent based on this data (Reference 1).

11A.2 Control Rod Source

The full length control rods for this plant are silver-indium-cadmium (Ag-In-Cd).

11A.3 Boric Acid Source

A direct contribution to the reactor coolant tritium concentration is made by neutron reaction with the boron in solution. The concentration of boric acid varies with core life and load follow so that this is a steadily decreasing source during core life. The principal boron reactions are the B^{10} (n, 2a) H^3 and B^{10} (n, a) Li^7 (n, na) H^3 reactions. The Li^7 (n, na) H^3 reaction occurs also with lithium added for pH control. This reaction is controlled by limiting the overall lithium concentration to 7.6 ppm during operation. Li^6 is essentially excluded from the system by utilizing 99.9 percent Li^7.

11A.4 Burnable Shim Rod Source

These rods are typically present in the core and represent a potential tritium contribution.

11A.2 Tritium Releases

For a leakage from the primary coolant system into the containment of fifty pounds per day, with an assumed tritium concentration in the coolant of 1.0 µCi/cc (no containment ventilation purge), the tritium concentration in the atmosphere of the containment would be low enough to permit access without protective equipment by plant maintenance personnel for an average of two hours per week.

Leakage into the containment atmosphere is based on leakages from equipment such as pumps and valves. Abnormal leakages in excess of the design estimate have occurred in operating plants. The leaking components have been identified and corrective measures have been taken. For example, at Watts Bar Nuclear Plant, bellows and diaphragm sealed valves are being used to limit leakages.

The total activity which would be released from the containment purge during refueling operations would amount to approximately 110 curies. This activity from evaporative losses will be discharged from the plant as gaseous waste. Similarly, any radioactive gases in the containment would be discharged. Evaporation of tritium from the refueling pool has been considered in evaluating the consequences of tritium on both operators and environmental releases. This indicates maximum tritium concentration in the containment consistent with forty hours per week occupancy and total tritium release of about thirty curies per refueling. Since there is no forced mixing between refueling water and the spent fuel pool, and tritium-free water is used for makeup, evaporative tritium losses from the spent fuel pool should be minimal.

In-plant tritium concentration levels are held to a value consistent with safe personnel radiation exposure per 10 CFR 20. Tritiated water releases will be made to the Tennessee River at concentration levels below limits established by 10 CFR 20 and the ODCM.

11A.3 Design Bases

The design intent is to reduce the tritium sources in the Reactor Coolant System to a practical minimum in order to permit longer retention of the reactor coolant within the plant, without adversely affecting occupational radiation exposure.

11A.4 Design Evaluation

Table 11A-1 is a comparison of a typical design basis tritium production which is utilized to establish system and operational requirements of the plant (Reference 1). It will be noted that there are two principle contributors to the tritium production: ternary fission source and the dissolved boron in the reactor coolant. Of these sources it will be noted that the thirty percent release of ternary fission through the cladding was the predominant contributor in past design considerations.

Because of the importance of this source on the operation of the plant, Westinghouse has been closely following operating plant data. Table 11A-2 represents tritium releases during one calendar year for different Westinghouse PWR plants. Further, a program is being conducted at the R. E. Ginna Plant to follow this in detail. The R.E. Ginna Plant has a zircaloy clad core with silver-indium-cadmium control rods. The operating levels of boron concentration during the startup of the Ginna plant are approximately 1100 to 1200 ppm of boron. In addition, burnable poison rods in the core contain boron which contributed some tritium to the coolant, but only during the first cycle. Data during the operation of the Ginna plant has indicated very clearly that the present design sources were indeed conservative. The tritium released is essentially from the boron dissolved in the coolant and a ternary fission source which is less than one percent. In addition to this data, other operating plants with zircaloy clad cores have also reported very low tritium concentrations in the Reactor Coolant System after considerable longer operation.

Based on the above, the following conclusions have been reached:

(1) The tritium levels in plants operating with zircaloy clad cores will be substantially lower than previous design predictions.

(2) Containment access during power operation and refueling will become the limiting factor at about the 8th year in the life of the facility with all tritium retained and stored in the plant.

(3) The tritium in the containment purge and the containment ventilation air during refueling will be discharged.

11A.5 Tritium Lead Test Assembly

11A.6 Tritium Producing Burnable Absorber Rod (TPBAR) Source (Unit 1 Only)

Beginning with Cycle 5, WBN will produce tritium to fulfill an Interagency Agreement with the U.S. Department of Energy (DOE). The tritium will be produced by the irradiation of Tritium Producing Burnable Absorber Rods (TPBARs). Based on tritium production needs, WBN may irradiate up to 2304 TPBARs in a given cycle. The discussion above is supplemented for tritium production by the following.

TPBARs are designed to mimic in many ways a standard burnable absorber. However, instead of using boron as the neutron absorbing material, TPBARs use ^{6}Li to purposely generate tritium, which is then captured in the TPBAR internal components. The primary reaction in the TPBAR is ^{6}Li (n, a → T + ^{4}He). A full description of the TPBARs and tritium production is found in References 5 and 6.

TPBARs are designed and fabricated to retain as much tritium as possible within the TPBAR. Since the TPBAR produced tritium is chemically bonded within the TPBAR, virtually no titium is available in a form that could escape through the TPBAR cladding. However, it is assumed that while operating with a Tritium Production Core (TPC) some of the tritium inventory in the TPBARs will permeate the cladding material and be released to the primary coolant. The design goal for this permeation process is less

than 1,000 Ci per 1,000 TPBARs per year as a core average. Thus a single TPBAR may release more than 1 Ci/year, but the total release for 1,000 TPBARs will be less than 1,000 Ci/year. As the TPC will contain up to 2,304 TPBARs, the total design basis tritium input from the maximum number of TPBARs is 2,304 Ci/year into the RCS.

In addition to the maximum design basis TPBAR permeation release, a potential release scenario is the failure of one or more of the TPBARs. It has been assumed that two TPBARs under irradiation would fail and the entire inventory of tritium would be released to the primary coolant. At the end of an operating cycle, the maximum available tritium in a single TPBAR is calculated to be about 11,600 Ci. While the occurrence of one or two failed TPBARs is considered to be beyond that associated with reasonable design basis considerations, it is assumed for the safety analysis. The logic for the assumption of two failed TPBARs is documented in Reference [7].

The tritium which permeates the cladding or is released from the TPBAR as a result of a cladding failure will be treated with other plant generated tritium as discussed in the preceding sections.

REFERENCES

(1) Locante, J., and Malinowski, D. D., "Tritium in Pressurized Water Reactors," American Nuclear Society Transactions, Vol.14, No. 1, 1971.

(2) NUREG-0498 Supplement No. 1., Final Environmental Statement Related to the Operation of Watts Bar Nuclear Plant, Units 1 and 2 April 1995, U.S. Nuclear Regulatory Commission.

(3) PNNL-11419 UC-731, Report on the Evaluation of the Tritium Producing Burnable Absorber Rod Lead Test Assembly, Revision 1, March 1997, Pacific Northwest National Laboratory.

(4) TTWP-6-003, Information Supplementing PNNL-11419, Revision 1, July 1997.

(5) NDP-98-181, Rev. 1, Tritium Production Core (TPC) Topical Report, February 8, 1999.

(6) Watts Bar Nuclear Plant (WBN) Unit 1 - Revision of Boron Concentration Limits and Reactor Core Limitations for Tritium Production Cores (TPC) - Technical Specification Change No. TVA-WBN-TS-00-105, dated August 20, 2001.

(7) DOE/EIS-0288, March 1999, Final Environmental Impact Statement for the Production of Tritium in a Commercial Light Water Reactor.

Table 11A-1 Tritium Sources In A Typical Wnes 4 Loop Reactor Operating At A Power Level Of 3582 MW(th) Curies/12 Full-Power Months At A 0.8 Load Factor

Tritium Source	Total Produced (Ci)	Release to the Coolant (Ci)
Ternary Fissions	10,500	1,050
Burnable Poison Rods(1)	1,520	152
Control Rods	3	3
	Soluble Poison Boron	
(Initial Cycle) (2)	222	222
(Equilibrium Cycle) (3)	309	309
Li-7 and Deuterium Reactions	110	110
Total (Initial Cycle)	12,400	1,540
Total (Equilibrium Cycle)	10,900	1,470

(1) Weight of B_20_3= 221 (B^{10} - 13.58 lb)

(2) Initial boron (hot, full power, equilibrium xenon) = 860 ppm

(3) Initial boron (hot, full power, equilibrium xenon) = 1,200 ppm

Table 11A-2 Tritium Release For 1972 From Westinghouse Designed Operating Reactors

Plant	Total Released Curies	Avg. Discharge Concentration µCi/cc	Fraction(3) 10CFR20 Limit
Yankee Rowe(1)	803	5.0×10^{-6}	1.7×10^{-3}
Connecticut Yankee(1)	5,890	7.6×10^{-6}	2.5×10^{-3}
San Onofre(l)	3,480	5.99×10^{-6}	2.0×10^{-3}
Ginna(2)	119	1.6×10^{-7}	5.5×10^{-5}
H. B. Robinson No. 2(2)	405	1.88×10^{-7}	6.3×10^{-5}
Point Beach No. 1 and 2(2)	563	1.13×10^{-6}	3.8×10^{-4}

(1) Stainless Steel Clad

(2) Zircaloy Clad

(3) 10 CFR 20 Limit is 3×10^{-3} µCi/cc