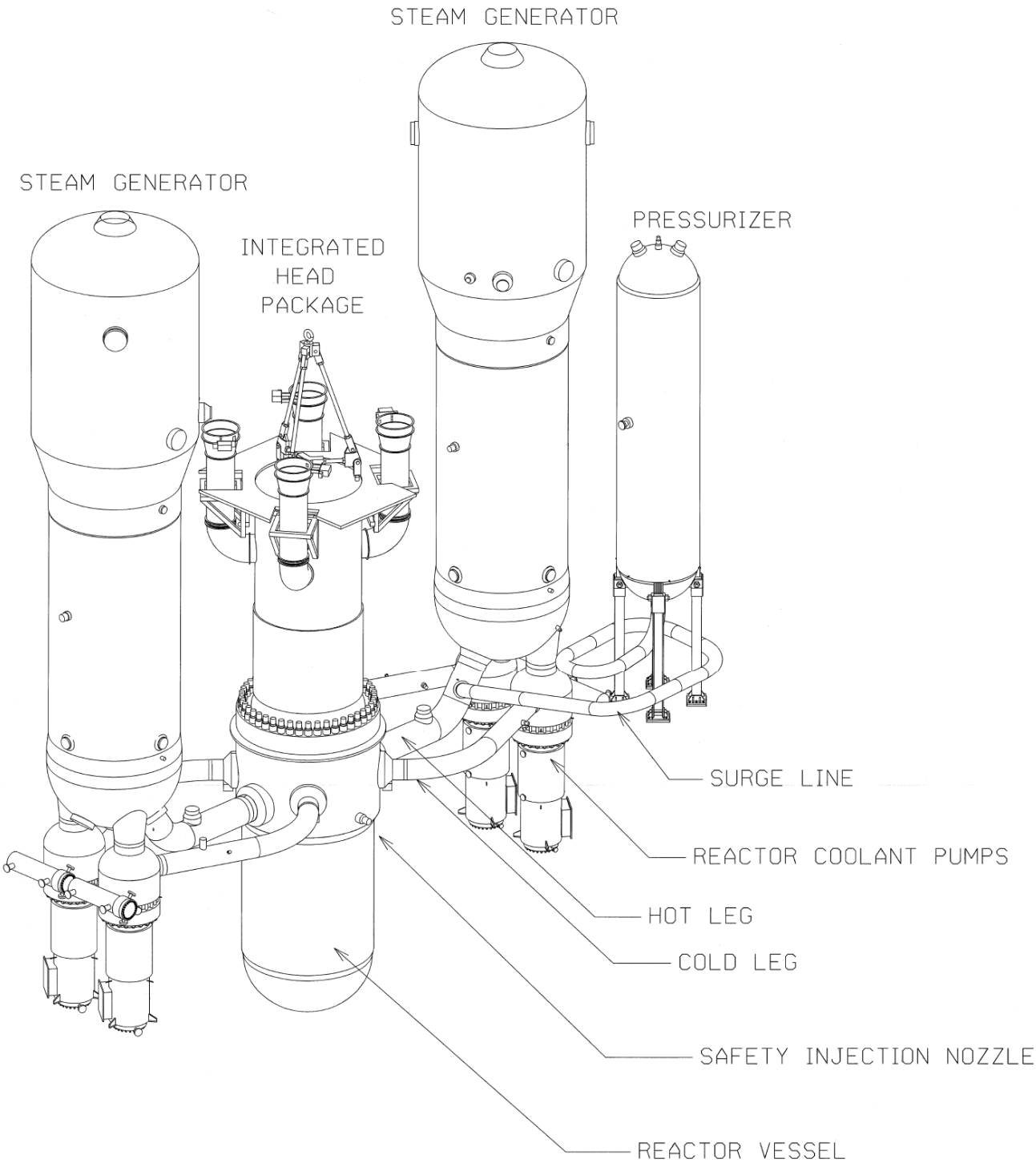


Figure 3-1 Reactor Coolant Loops - Isometric View

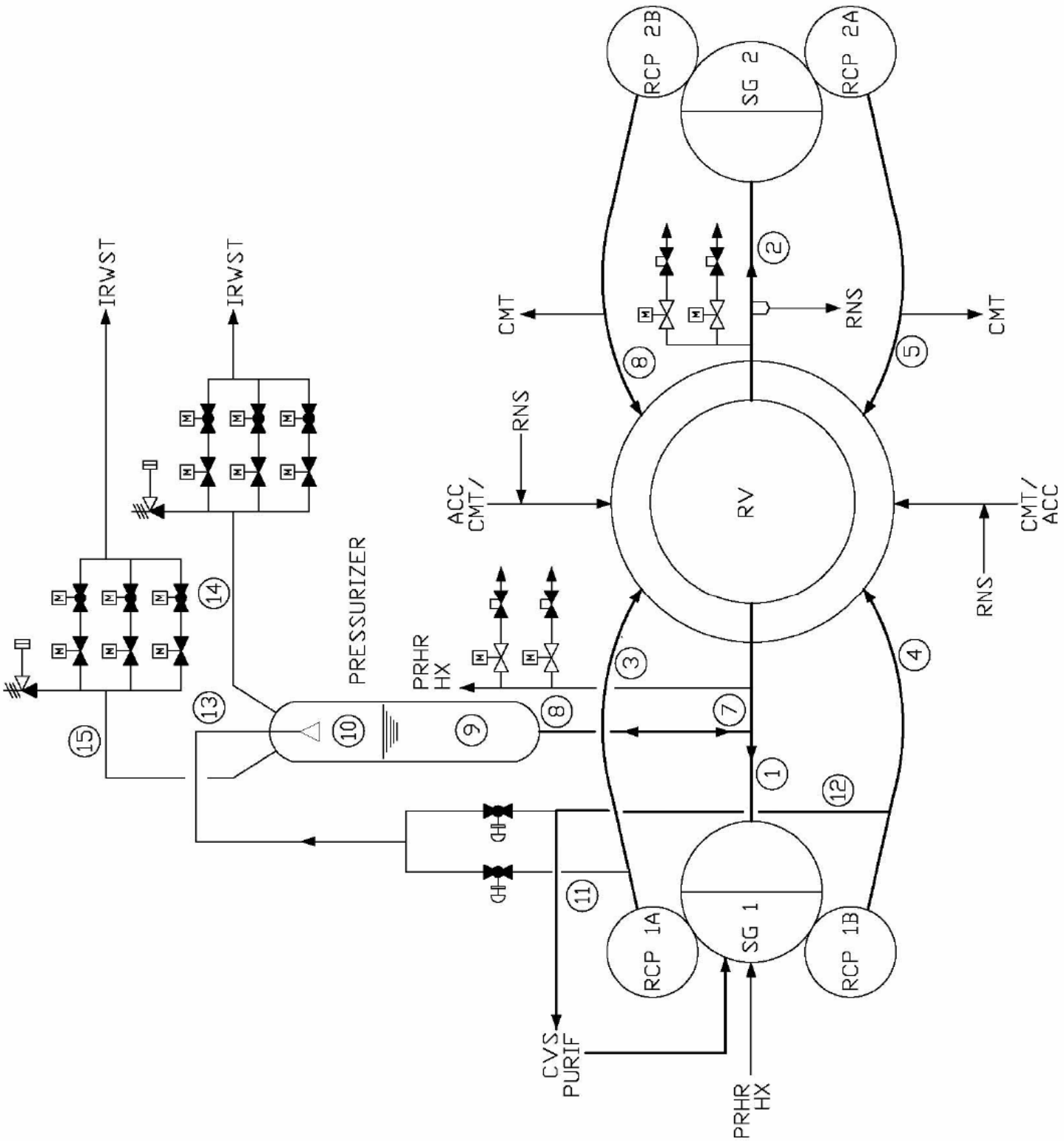


Figure 3-2 Reactor Coolant System Schematic Flow Diagram

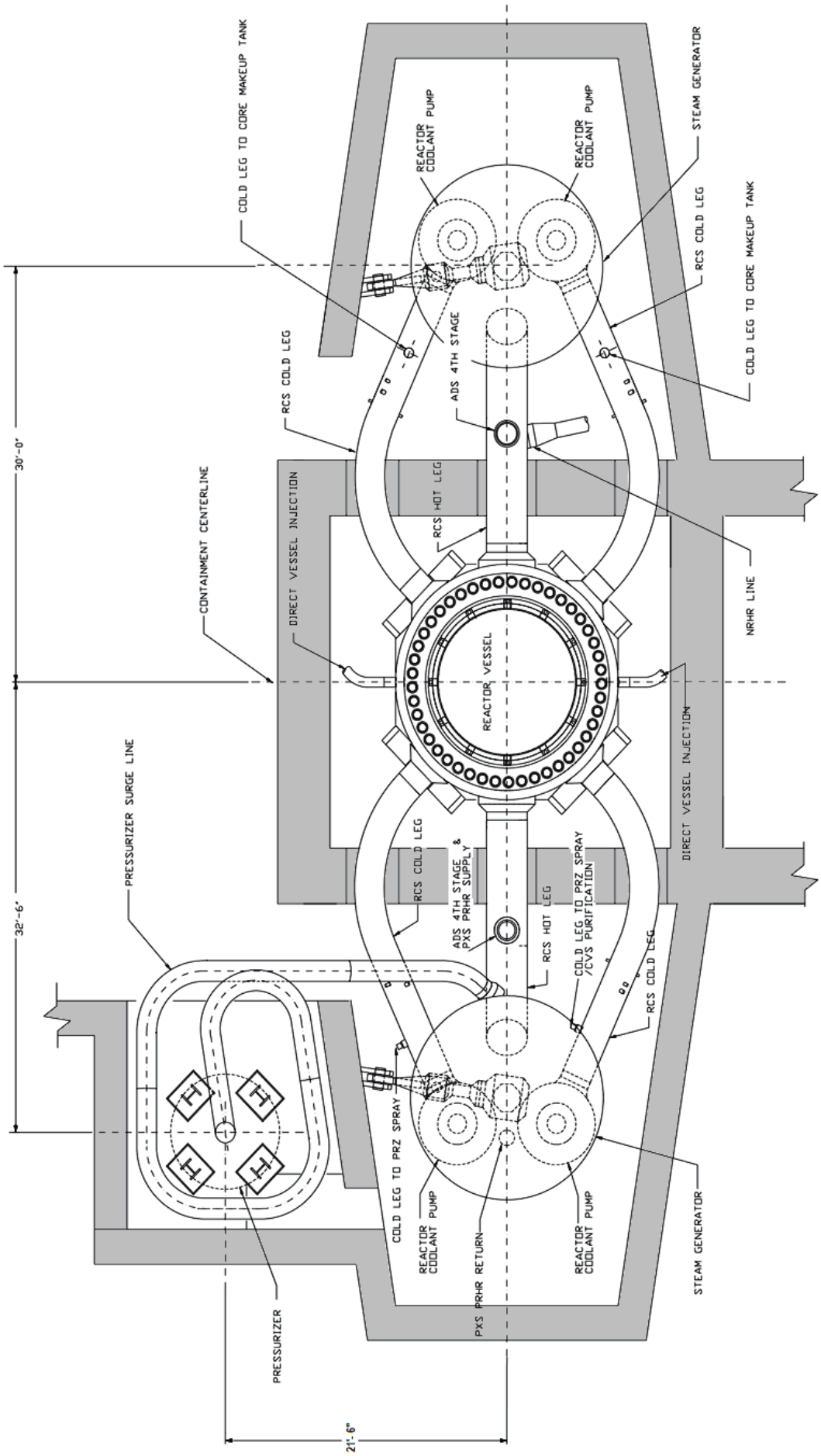


Figure 3-3 Reactor Coolant System - Loop Layout

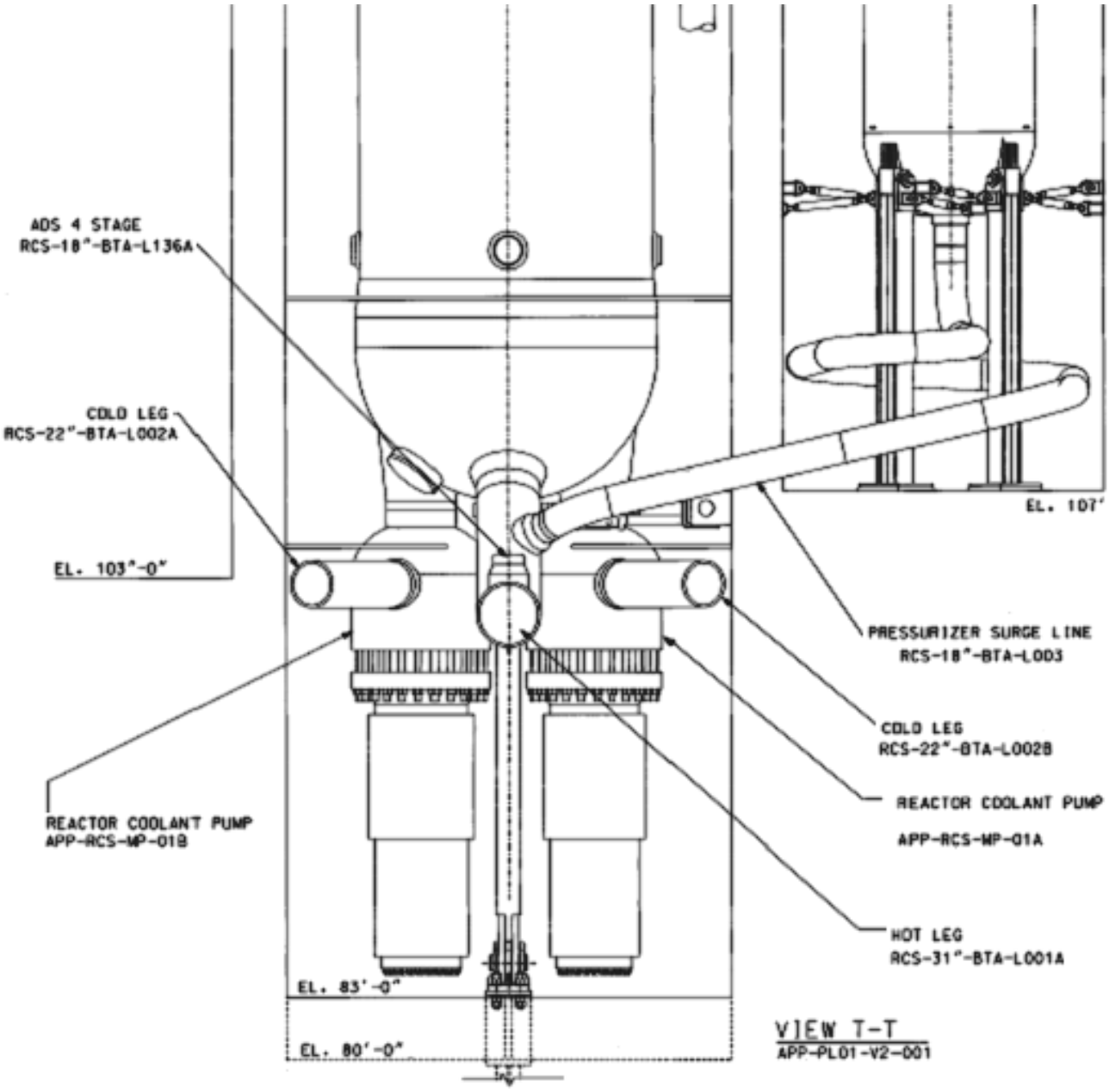


Figure 3-4 SG loop Piping Connections

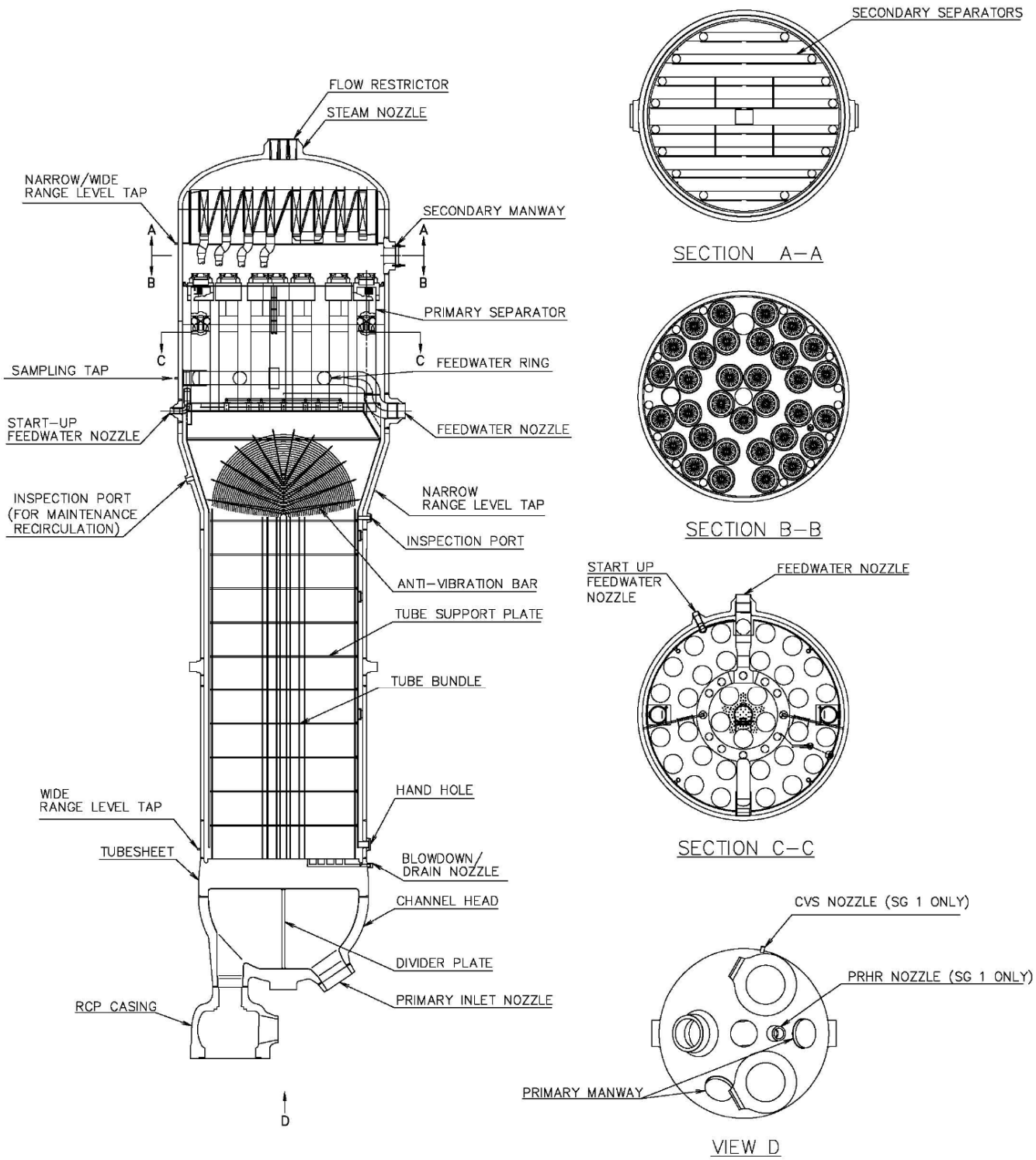


Figure 3-5 Delta-125 Model Steam Generator

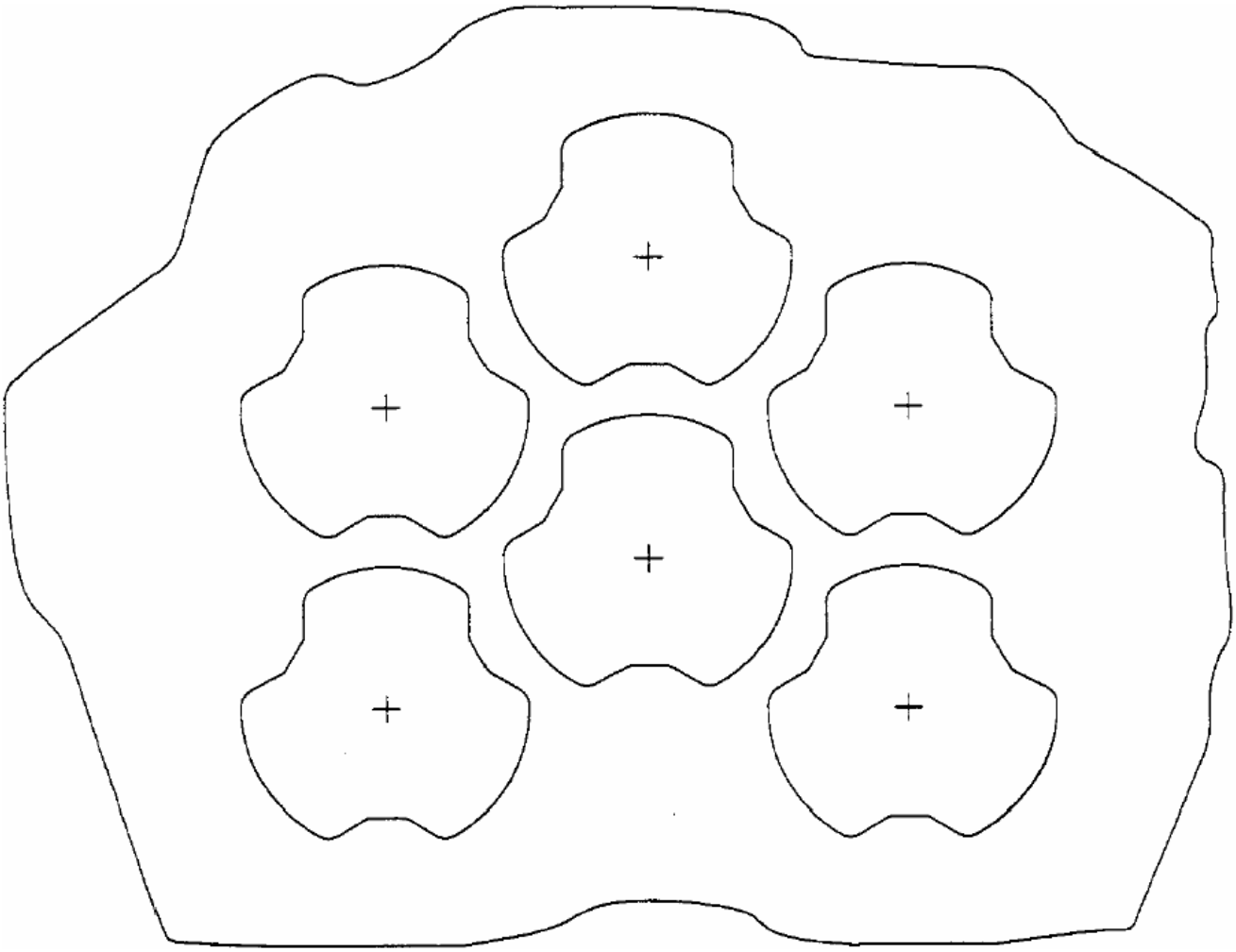

Figure 3-6 SG Support Plate Trifoil Holes

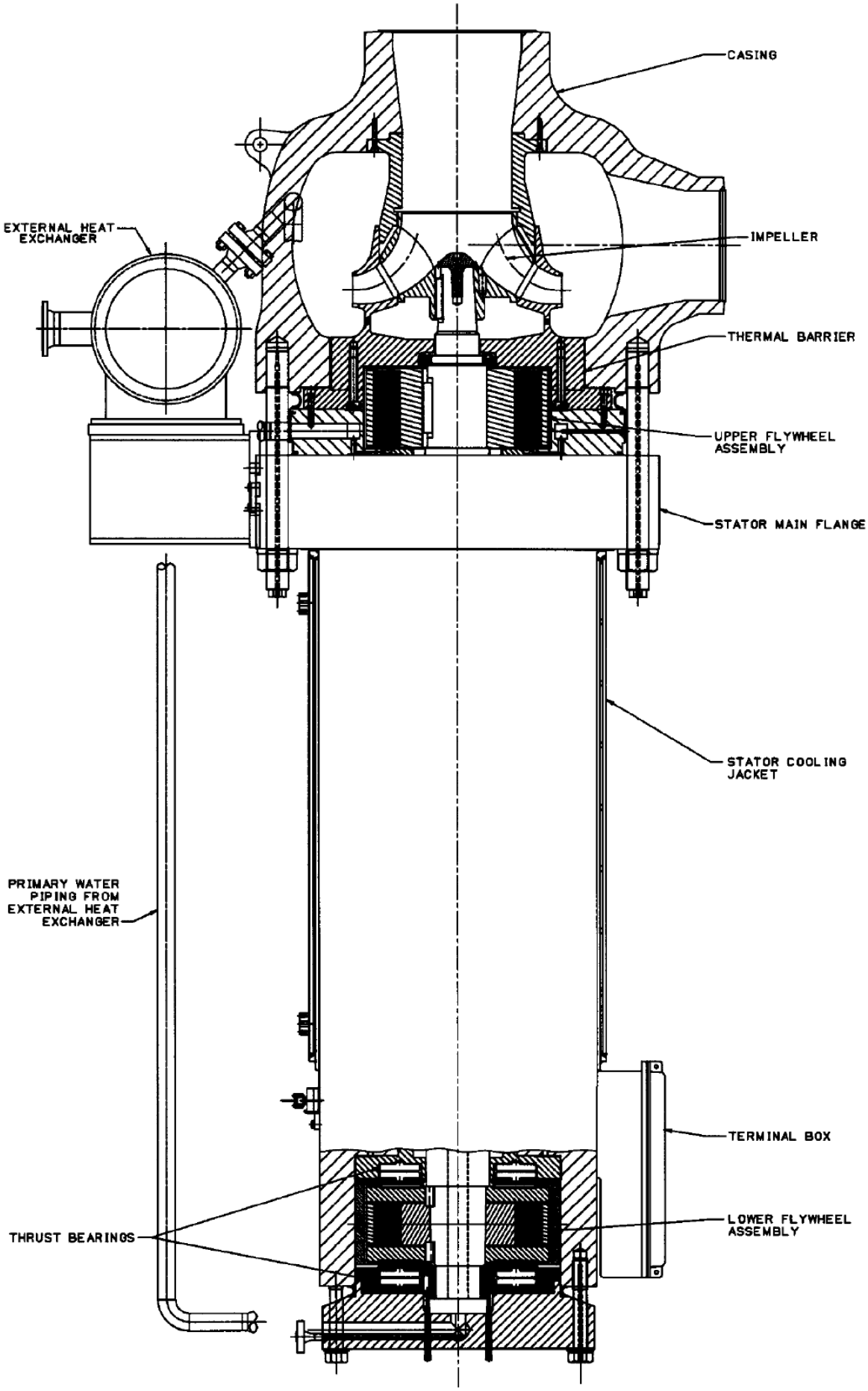


Figure 3-7 Reactor Coolant Pump

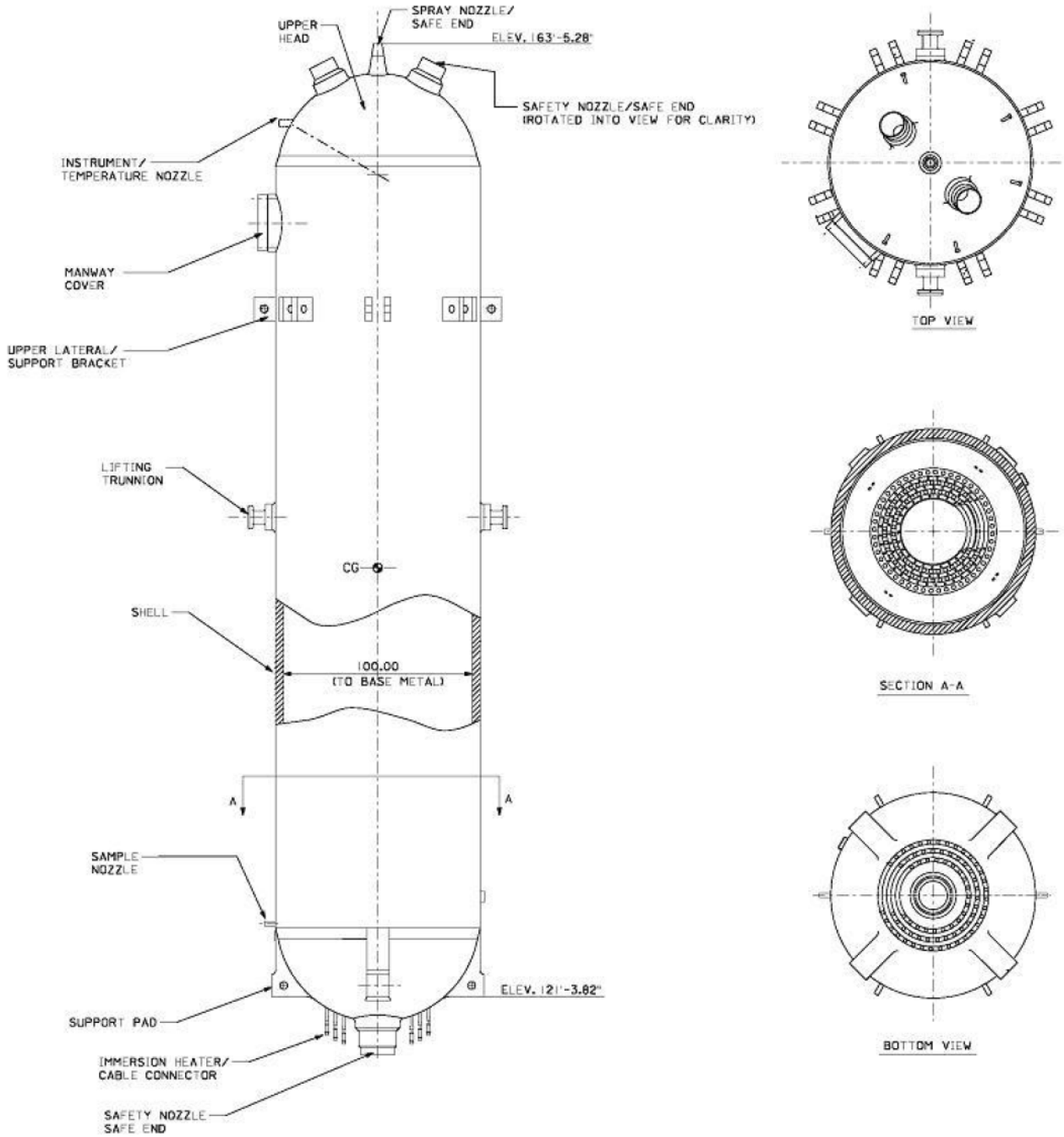


Figure 3-8 Pressurizer

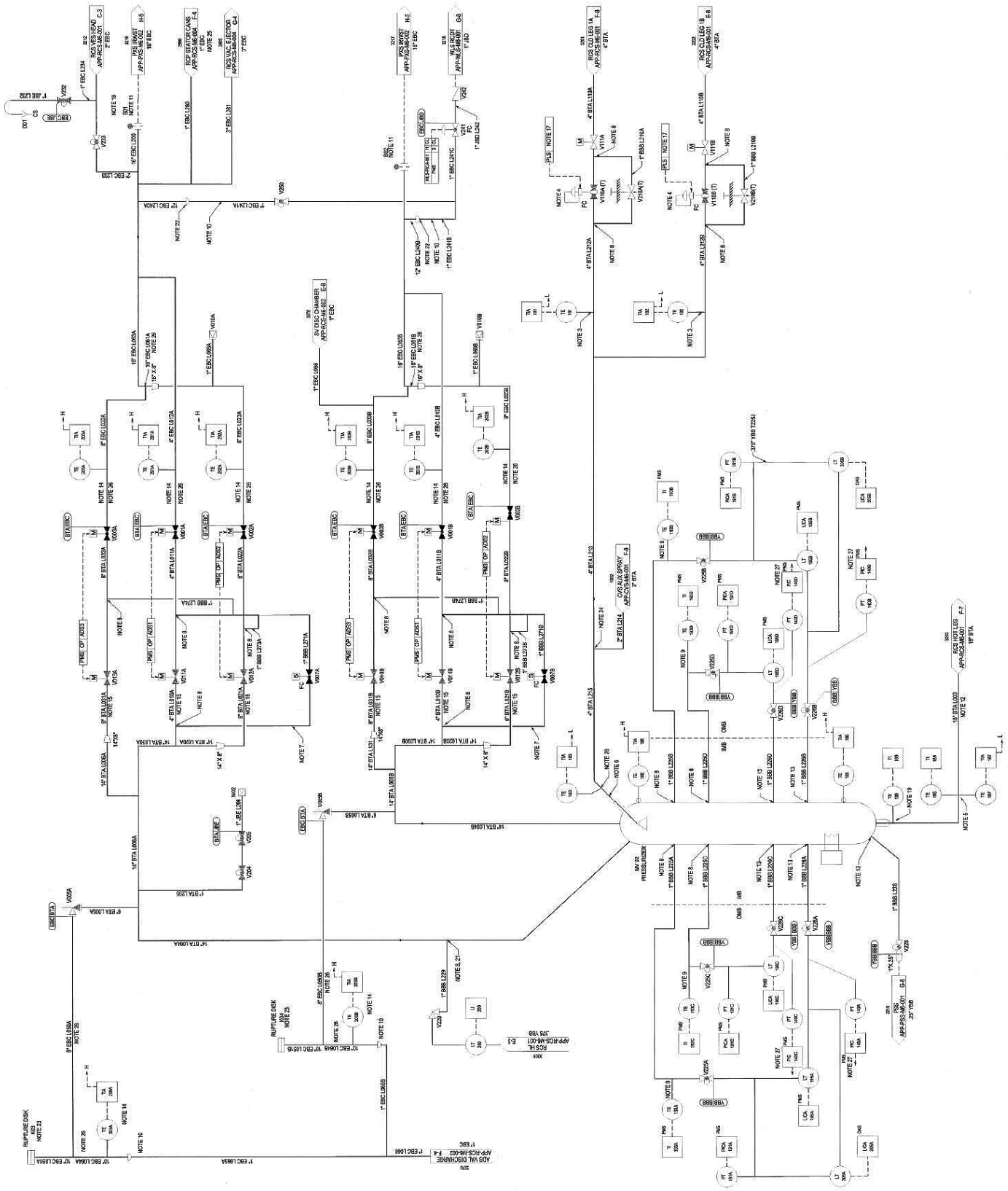

Figure 3-9 Pressurizer System P&ID

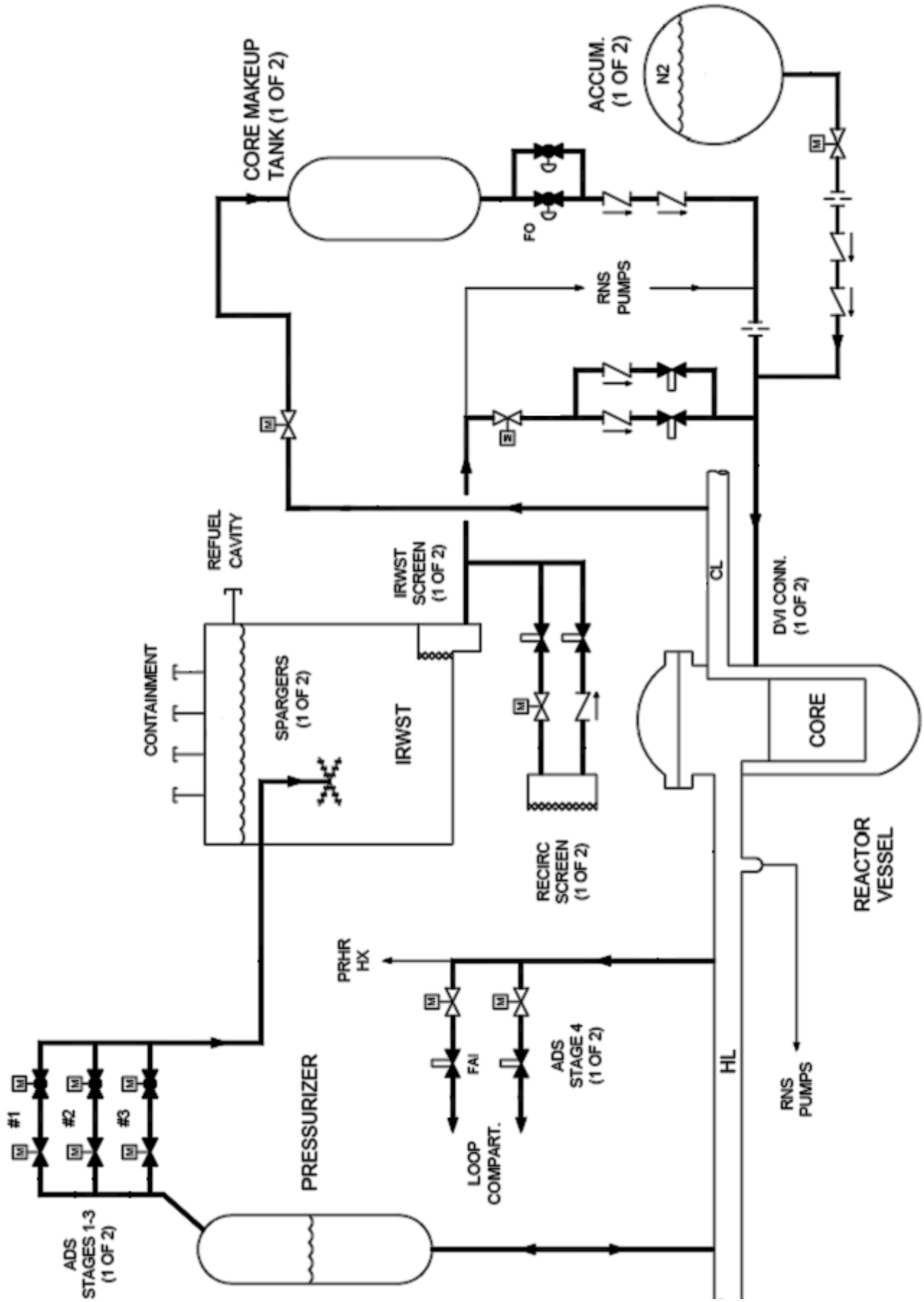


Figure 3-10 Automatic Depressurization Valves