HRTD
Human Resources
Training & Development

U.S.NRC
United States Nuclear Regulatory Commission
Protecting People and the Environment

US-APWR Plant Overview
US-APWR Technology Chapter 1.0

Design Heritage

- Basic design concept of US-APWR is same as Japanese-APWR.
- New technologies of APWR are fully tested, well-verified and established.
- The 1700-MWe US-APWR is based on the established APWR technology with:
  - ✓ Latest technologies to improve plant efficiency
  - ✓ Minor modifications to meet U.S. utility requirements

APWRs Under Construction/Proposed

- MHI submitted DCD for design certification – 01/2008
- Luminant submitted COLA for Comanche Peak (2 units) – 09/2008
- Dominion selected US-APWR over ESBWR for North Anna 3 – 05/2010
- Tsuruga (Japan) – 2 J-APWR units scheduled to be completed 2016, 2017

US-APWR Cutaway View

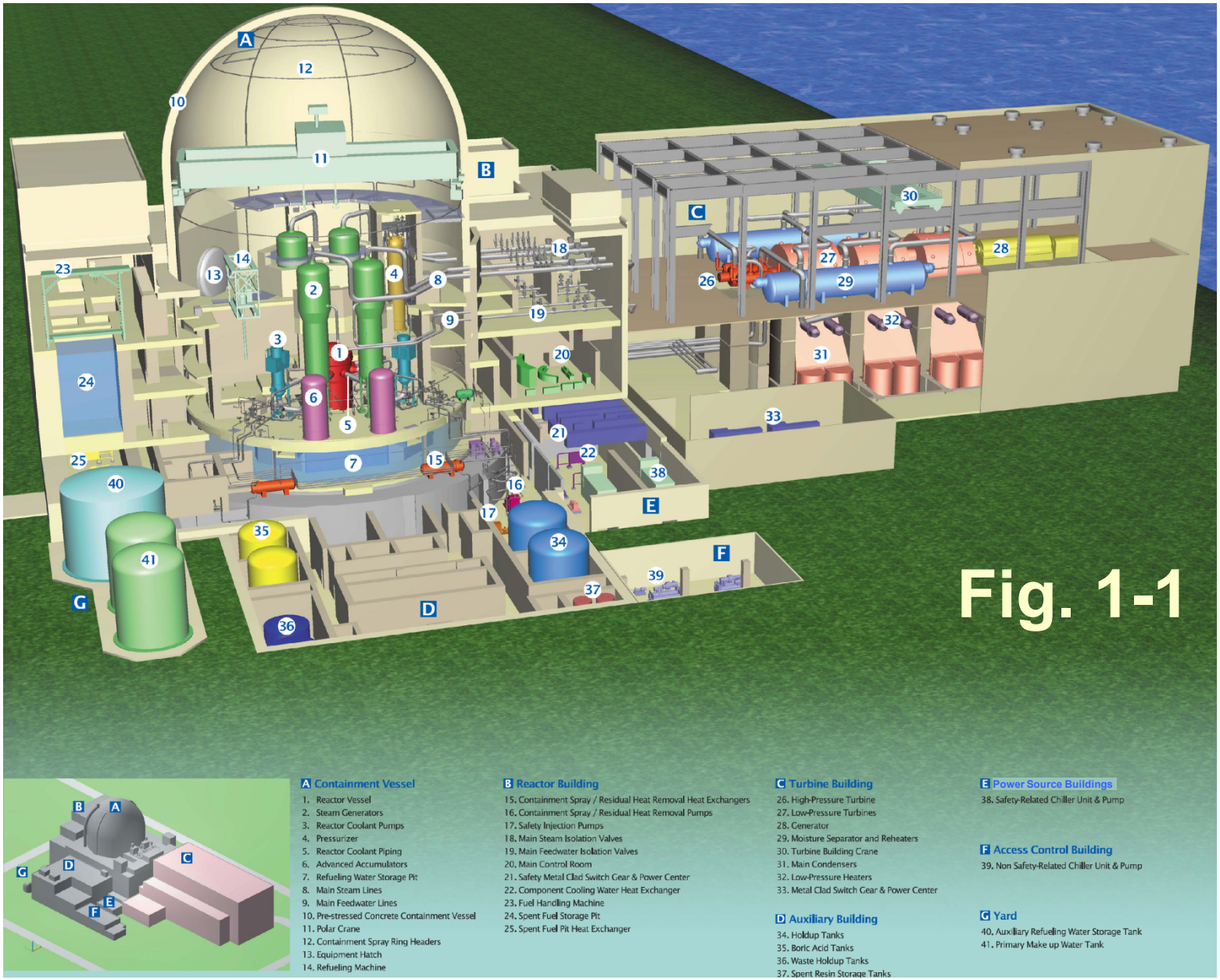

US-APWR Building Layout

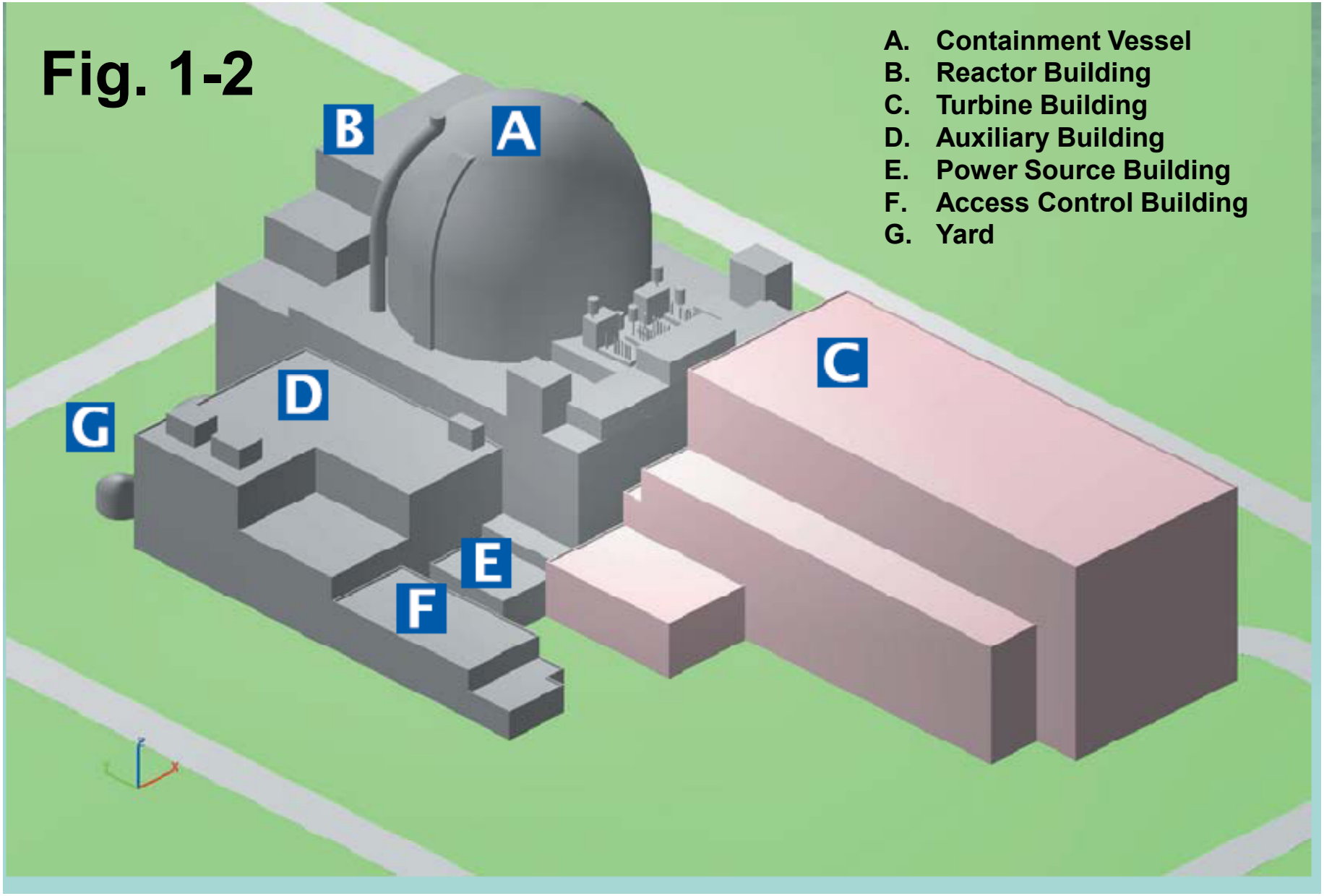

Site Arrangement

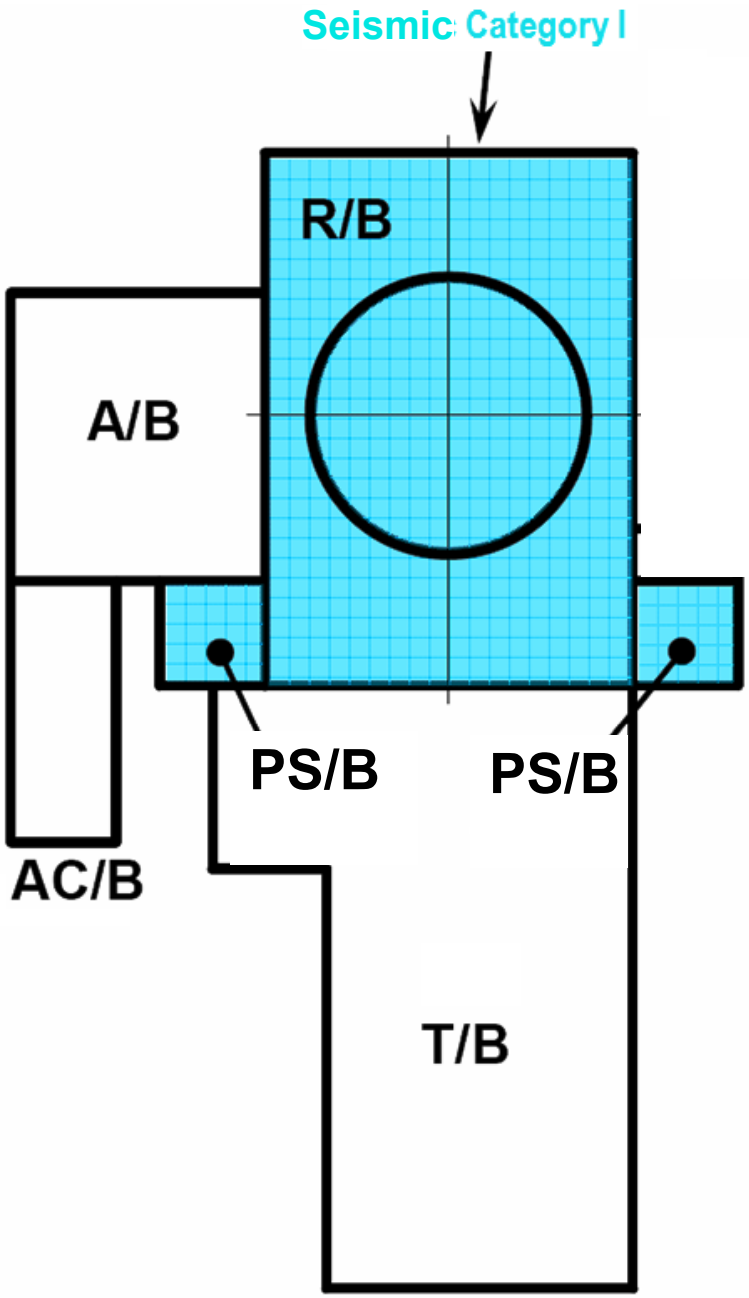

R/B: Reactor Building
A/B: Auxiliary
PS/B: Power Source Building
T/B: Turbine Building
AC/B: Access Control Building

Fig. 1-3

Table 1-1
Main Specifications of the US-APWR

Core Thermal Output (MWt) Electric Power (MWe)		4451 1700 class
Number of Loops		4
Coolant Pressure psia Coolant Temperature (hot leg) °F		2250 617
Reactor	Number of Fuel Assemblies Fuel Rod Lattice Active Core length (ft) Vessel Height x Diameter (in.)	257 17 x 17 14 535 x 203
Steam Generator Reactor Coolant Pump	Heat Transfer Area (ft^2/SG) Thermal Design Flow (gpm/loop)	91,500 112,000
Turbine	LP Last-Stage Rotating Blades (in.)	70 class

Core Design Parameters

Parameter	Current 4-Loop (Watts Bar)	US-EPR	US-APWR
Core Thermal Power, MW	3459	4590	4451
Number of Fuel Assemblies	193	241	257
Fuel Lattice	17 x 17	17 x 17	17 x 17
Active Fuel Length, ft	12	13.75	14.00
Rods per Assembly	264	265	264
Avg. Linear Heat Rate, KW/ft	5.52	5.01	4.6
Peak Linear Heat Rate, KW/ft	13.8	13.7	12.0
Number of Control Rods	57	89	69

Table 1-2 Comparison of General Information and Reactor Core Characteristics

Parameter	US-APWR	J-APWR	US Current four-loop
Gross electrical output (MWe)	1,700 class	1,538	1,186
Core thermal output (MWt)	4,451	4,451	3,411
Operation pressure (psia)	2,250	2,250	2,250
Hot leg temperature (°F)	617	617	618
Number of fuel assemblies	257	257	193
Fuel assembly lattice	17x17	17x17	17x17
Effective fuel length (ft.)	14	12	12
Number of fuel rods per fuel assembly	264	264	264
Average linear heat rate (kW/ft.)	4.6	5.3	5.4
Number of Rod Cluster Control Assemblies (RCCA)	69	69	53
Design life (years)	60	60	40

Core Components

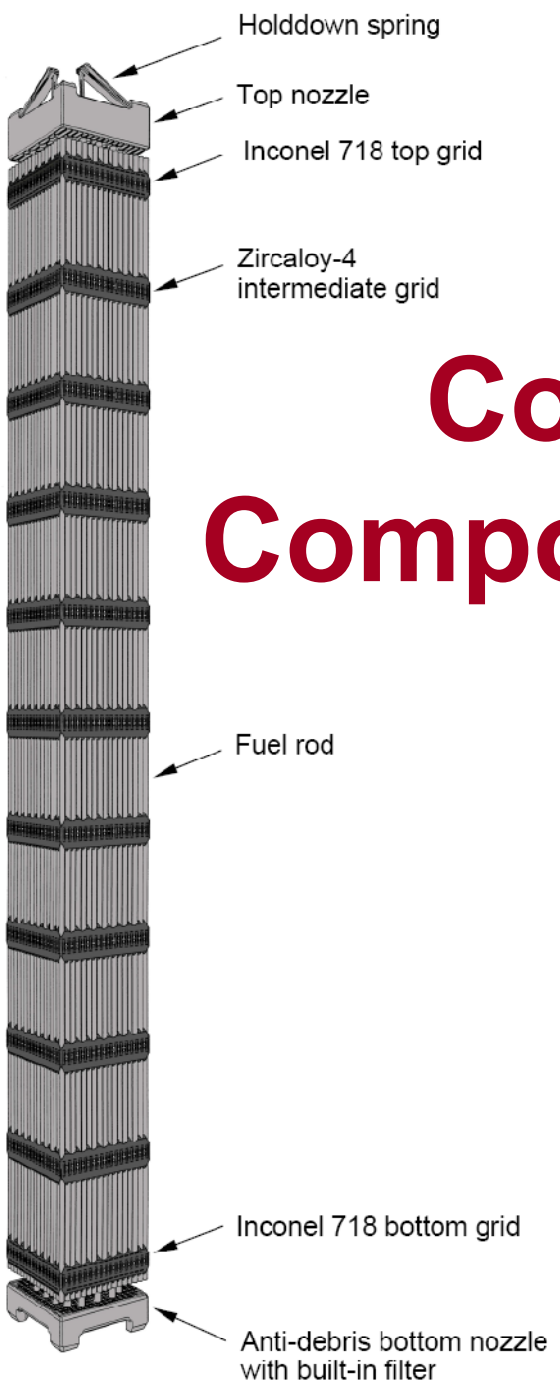

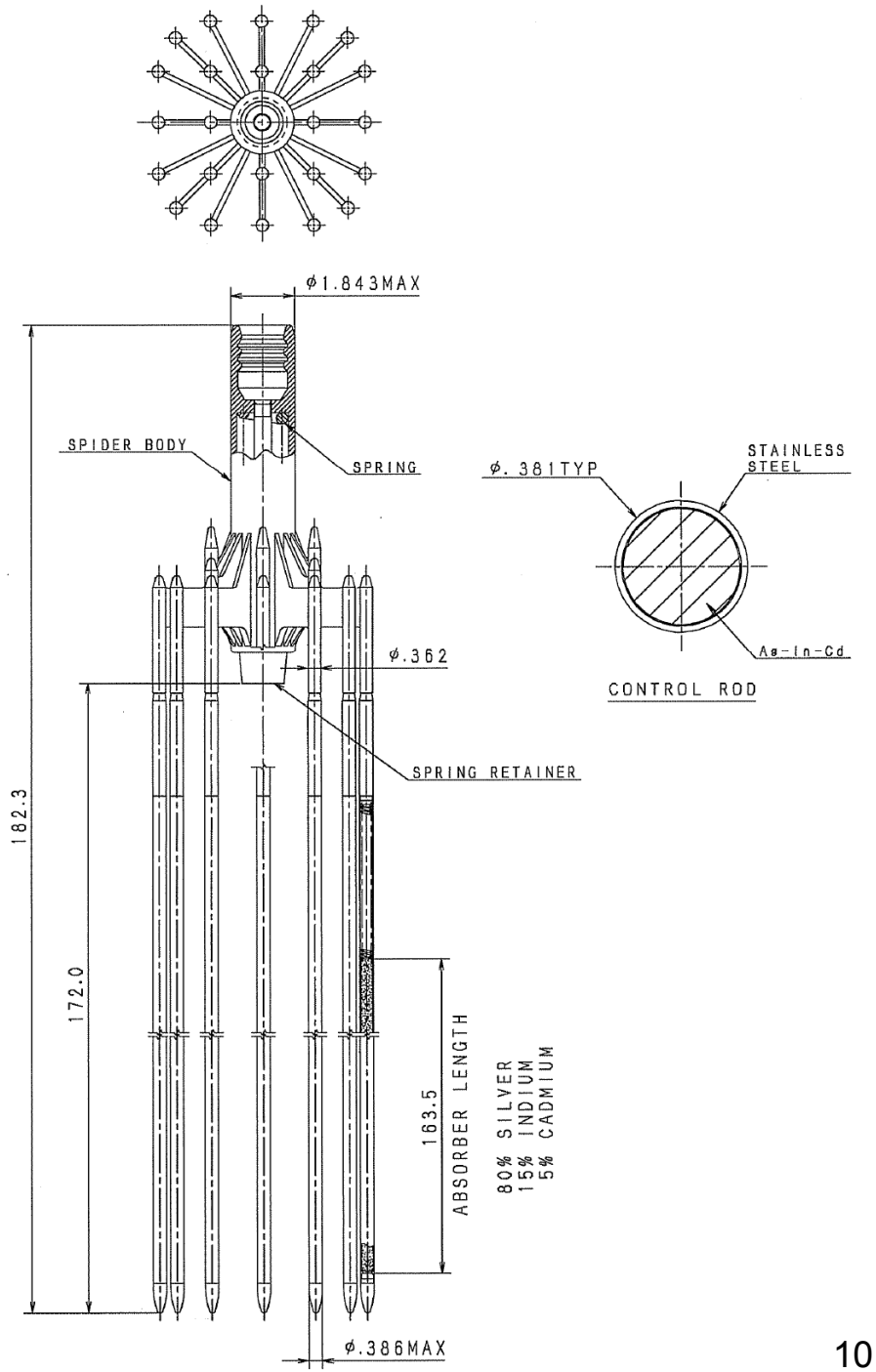

Table 1-3 Comparison of Reactor Coolant Systems and Connecting Systems (sheet 1 of 2)

Parameter	US-APWR	J-APWR	US Current four-loop
Reactor Coolant System			
Number of heat transfer loops	4	4	4
Operation pressure (psia)	2,250	2,250	2,250
Hot leg temperature (°F)	617	617	618
Reactor Vessel			
Vessel inner diameter(in)	203	203	173
Thermal shield/ reflector design	Neutron Reflector	Neutron Reflector	Neutron Pad Design
In-core instrumentation	Top mounted	Bottom mounted	Bottom mounted
Steam Generator			
Number	4	4	4
Type	Vertical U-tube heat exchanger	Vertical U-tube heat exchanger	Vertical U-tube heat exchanger
Heat transfer area (ft2)	91,500	70,000	55,000
Number of U-tube	6,747	5,830	5,626
Reactor Coolant Pump			
Number	4	4	4
Type	Vertical shaft, single-stage centrifugal	Vertical shaft, single-stage centrifugal	Vertical shaft, single-stage centrifugal

Reactor Coolant System

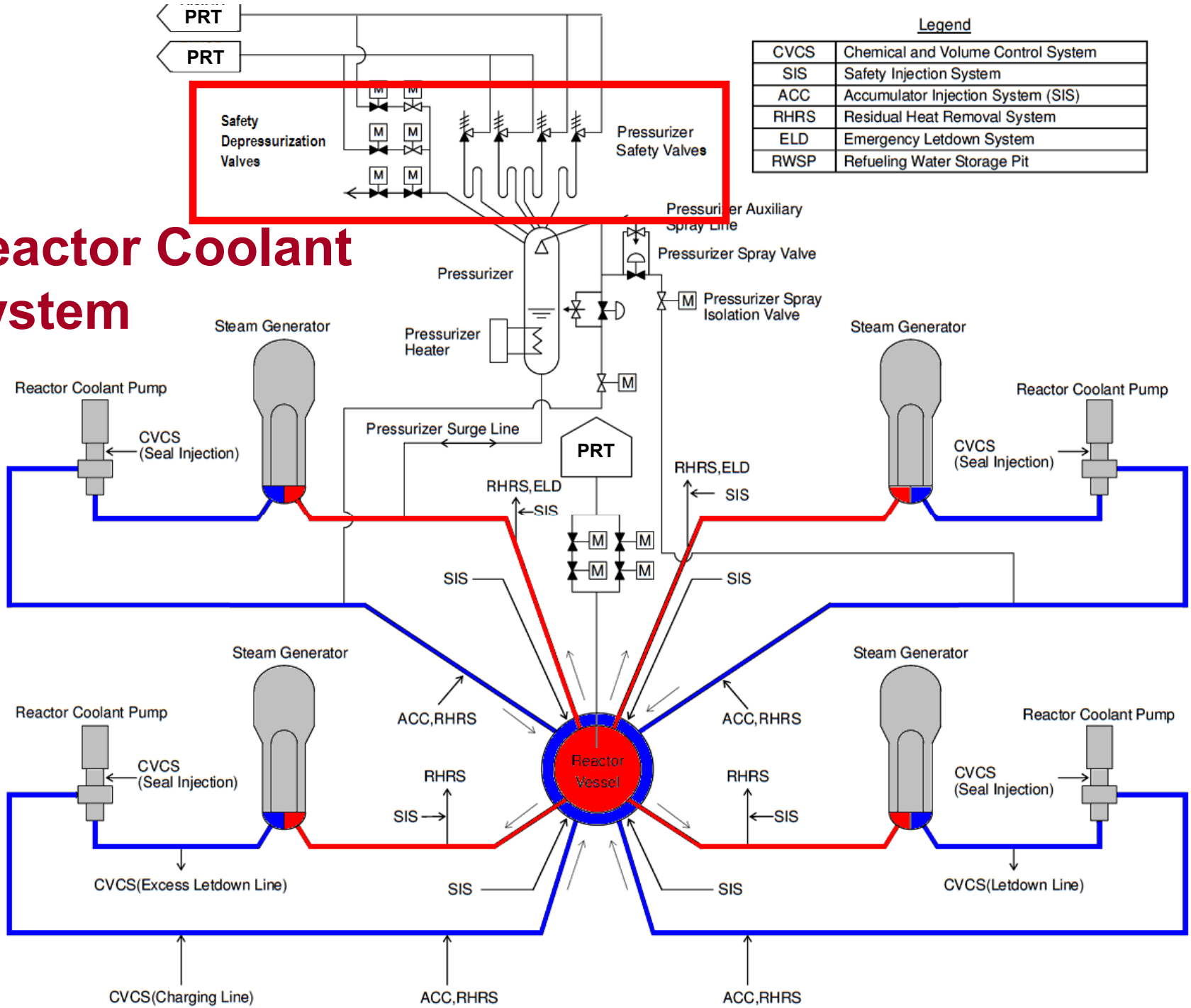

Legend	
CVCS	Chemical and Volume Control System
SIS	Safety Injection System
ACC	Accumulator Injection System (SIS)
RHRS	Residual Heat Removal System
ELD	Emergency Letdown System
RWSP	Refueling Water Storage Pit

Table 1-3 Comparison of Reactor Coolant Systems and Connecting Systems (sheet 1 of 2)

Parameter	US-APWR	J-APWR	US Current four-loop
Reactor Coolant System			
Number of heat transfer loops	4	4	4
Operation pressure (psia)	2,250	2,250	2,250
Hot leg temperature (°F)	617	617	618
Reactor Vessel			
Vessel inner diameter(in)	203	203	173
Thermal shield/ reflector design	Neutron Reflector	Neutron Reflector	Neutron Pad Design
In-core instrumentation	Top mounted	Bottom mounted	Bottom mounted
Steam Generator			
Number	4	4	4
Type	Vertical U-tube heat exchanger	Vertical U-tube heat exchanger	Vertical U-tube heat exchanger
Heat transfer area (ft2)	91,500	70,000	55,000
Number of U-tube	6,747	5,830	5,626
Reactor Coolant Pump			
Number	4	4	4
Type	Vertical shaft, single-stage centrifugal	Vertical shaft, single-stage centrifugal	Vertical shaft, single-stage centrifugal

Neutron Reflector

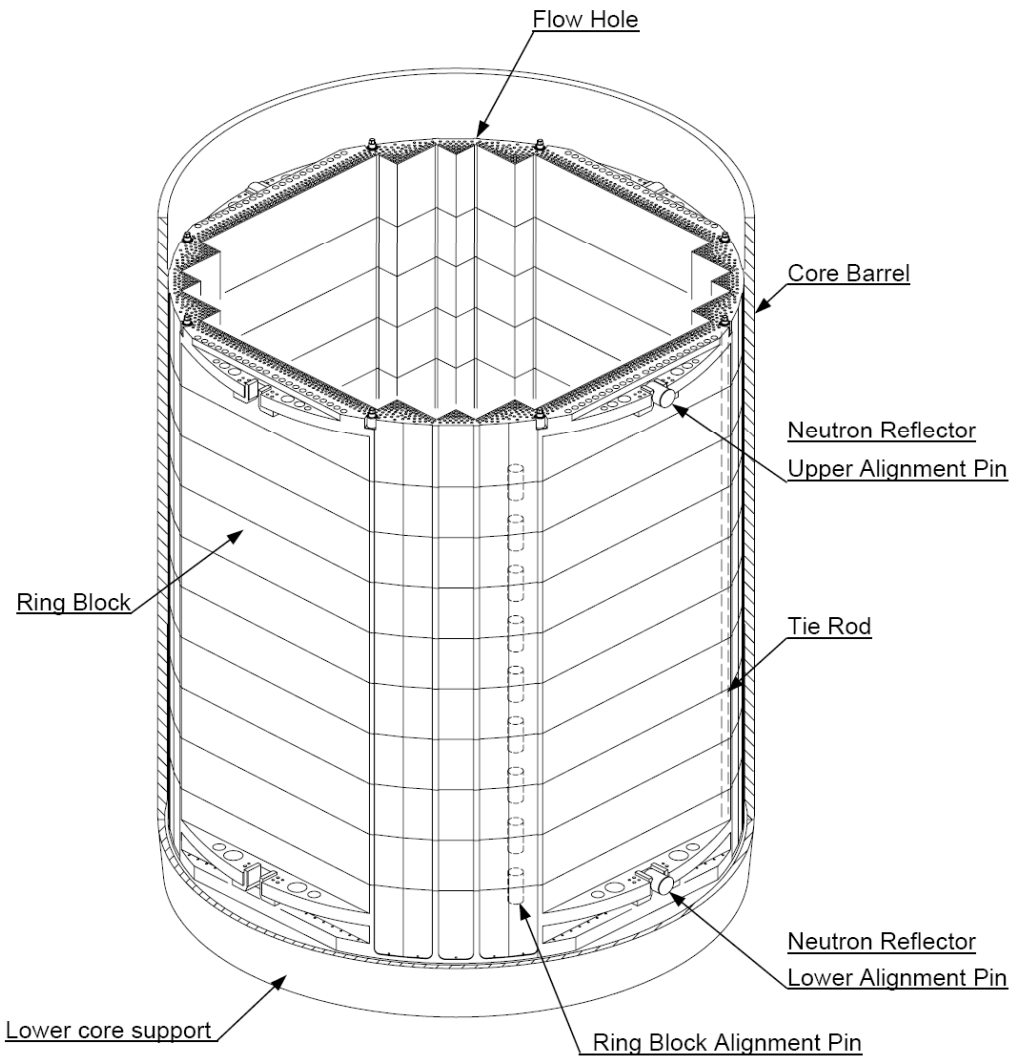

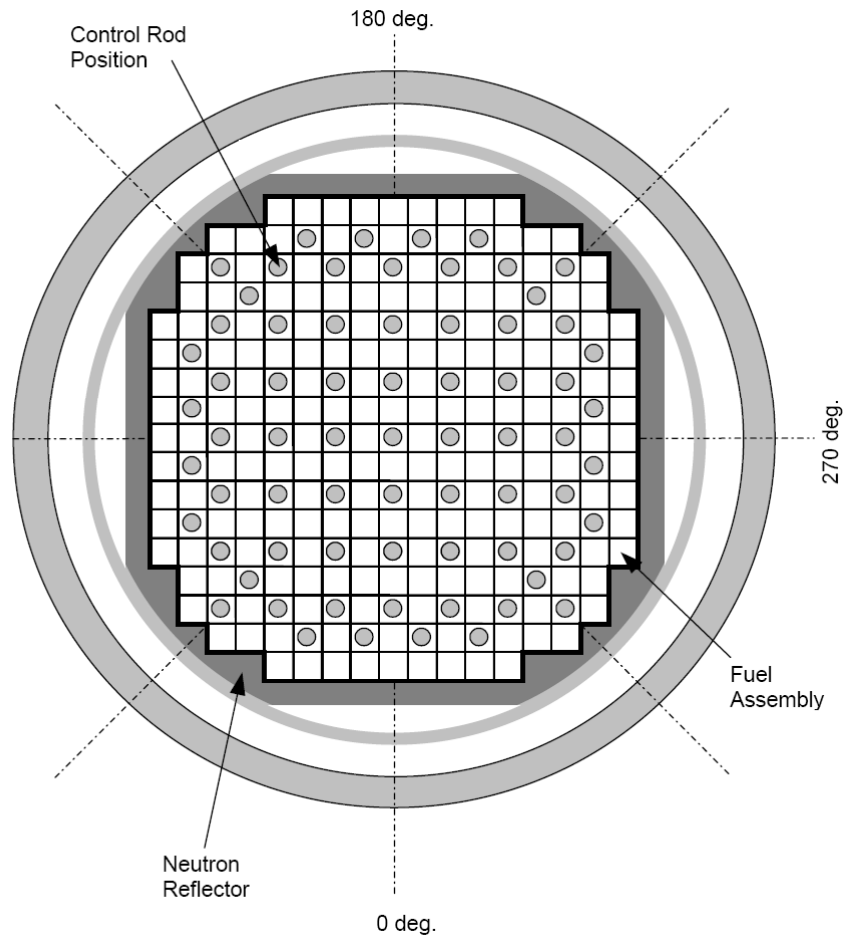

Table 1-3 Comparison of Reactor Coolant Systems and Connecting Systems (sheet 1 of 2)

Parameter	US-APWR	J-APWR	US Current four-loop
Reactor Coolant System			
Number of heat transfer loops	4	4	4
Operation pressure (psia)	2,250	2,250	2,250
Hot leg temperature (°F)	617	617	618
Reactor Vessel			
Vessel inner diameter(in)	203	203	173
Thermal shield/ reflector design	Neutron Reflector	Neutron Reflector	Neutron Pad Design
In-core instrumentation	Top mounted	Bottom mounted	Bottom mounted
Steam Generator			
Number	4	4	4
Type	Vertical U-tube heat exchanger	Vertical U-tube heat exchanger	Vertical U-tube heat exchanger
Heat transfer area (ft2)	91,500	70,000	55,000
Number of U-tube	6,747	5,830	5,626
Reactor Coolant Pump			
Number	4	4	4
Type	Vertical shaft, single-stage centrifugal	Vertical shaft, single-stage centrifugal	Vertical shaft, single-stage centrifugal

Table 1-3 Comparison of Reactor Coolant Systems and Connecting Systems (sheet 2 of 2)

Parameter	US-APWR	J-APWR	US Current four-loop
Thermal design flow (gpm/loop)	112,000	113,600	95,700
Motor output(hp/unit)	8,200	8,200	7,000
Pressurizer			
Internal volume (ft3)	2,900	2,300	1,800
Surge nozzle nominal diameter (in)	16	16	14
Reactor Coolant Pipes			
Pipe inner diameter(in)	31	31	Reactor inlet 27-1/2 Reactor outlet 29 RCP suction 31
Residual heat removal system			
Residual heat removal pump			
Number	4	4	2
Type	Horizontal, centrifugal	Horizontal, centrifugal	Vertical centrifugal
Flow rate(gpm)	3,000	3,000	3,800
SI use	no	no	yes
Containment Spray use	yes	yes	no
Residual heat exchanger			
Number	4	4	2
Type	Shell and U-tube type	Shell and U-tube type	Shell and U-tube type

Table 1-4 Comparison of Engineered Safety Features (sheet 1 of 3)

Parameter	US-APWR	J-APWR	US Current four-loop
Containment			
Type	PCCV	PCCV	PCCV
Inner Diameter(ft-in)	149-2	149-2	140
Inner Height(ft-in)	226-5	226-5	205
Containment Heat Removal System			
Containment Spray Pump			
Number	4	4	2
Type	Horizontal, centrifugal type	Horizontal, centrifugal type	Vertical, centrifugal type
Design flow rate(gpm)	3,000	3,000	Injection 3,165 Recirculation 3,750
RHR use	yes	yes	no
Residual heat exchanger			
Number	4	4	- (containment air fan cooler)
Type	Horizontal, U-tube type	Horizontal, U-tube type	-
Containment Spray Nozzles			
Number	348	344	197/header
Type	Hollow cone	Hollow cone	Hollow cone

Safety System Configuration

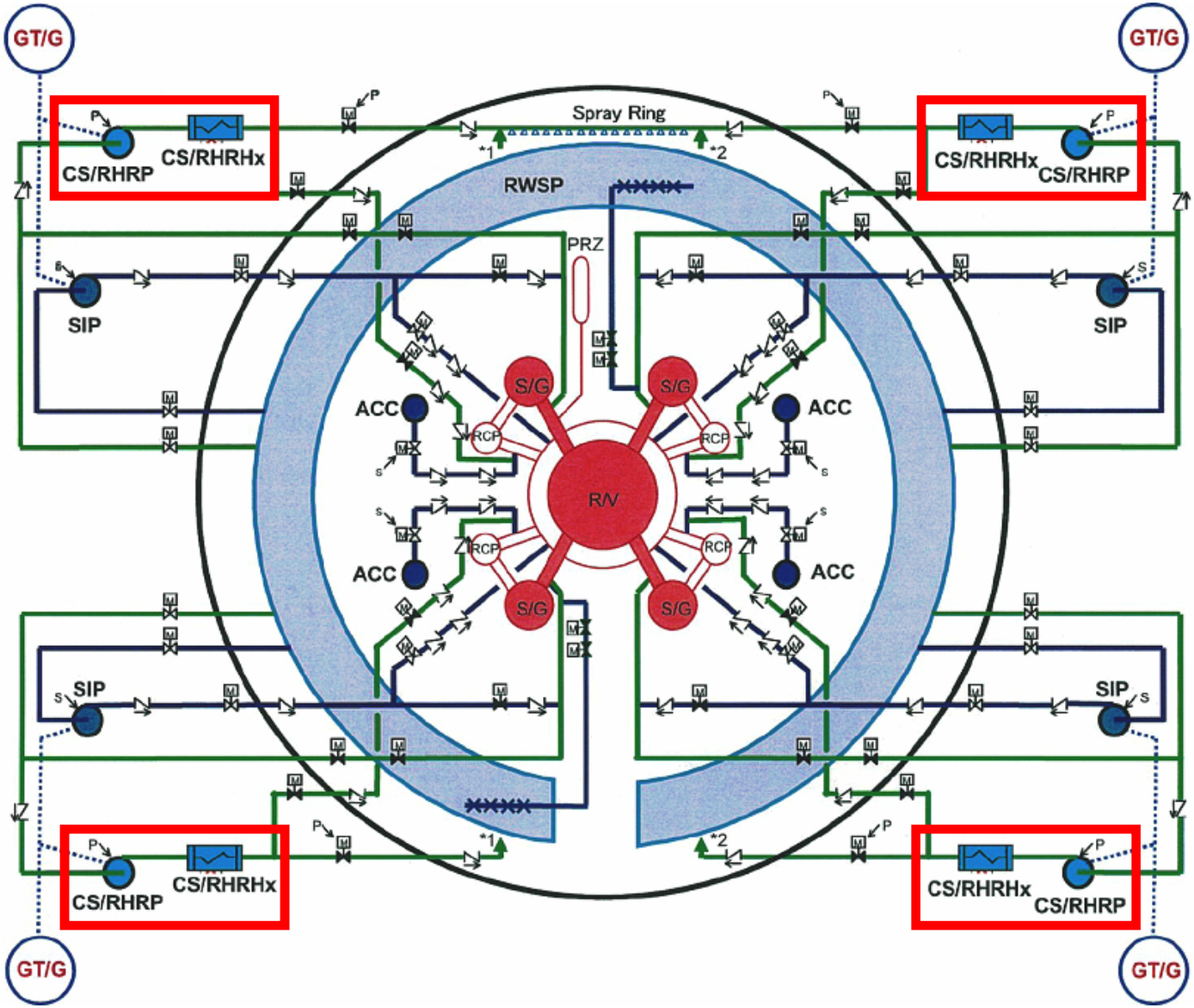

Legend

▬	Emergency Core Cooing System
▬	Containment Spray System and Residual Heat Removal System
SIP	Safety Injection Pump
CS/RHRP	Containment Spray / Residual Heat Removal Pump
CS/RHRHx	Containment Spray / Residual Heat Removal Heat Exchanger
ACC	Accumulator
RWSP	Refueling Water Storage Pit
GT/G	Gas Turbine Generator
R/V	Reactor Vessel
RCP	Reactor Coolant Pump
S/G	Steam Generator
PRZ	Pressurizer
S	Safety Injection Signal
P	Containment Spray Signal

Fig. 1-4

Table 1-4 Comparison of Engineered Safety Features (sheet 2 of 3)

Parameter	US-APWR	J-APWR	US Current four-loop
Containment Air Fan Cooler (Safety)			
Number	-	-	4
Emergency Core Cooling Systems			
High Pressure Safety Injection Pump			
Number	4	4	2
Type	Multi-stage centrifugal pump with inducer	Multi-stage centrifugal pump with inducer	Multi-stage centrifugal
Flow rate(gpm)	1,540	1,321	440
Charging / Safety Injection Pump			
Number	-	-	2
Type	-	-	Centrifugal
Flow rate(gpm)	-	-	150
Low Pressure Safety Injection Pump			
Number	-	-	2
Type	-	-	Vertical centrifugal
Flow rate(gpm)	-	-	3,800
RHR use	-	-	yes
Accumulator			
Number	4	4	4
Type	Dual flow rate	Dual flow rate	Single flow rate

Table 1-4 Comparison of Engineered Safety Features (sheet 3 of 3)

Parameter	US-APWR	J-APWR	US Current four-loop
Water volume(gallon)	15,850	15,850	6,358
Emergency Water Storage Pit			
Number	1	1	1
Type	Pit inside containment	Pit inside containment	Tank outside containment
Capacity(gallon)	607,640	607,640	394,000

Safety System Configuration

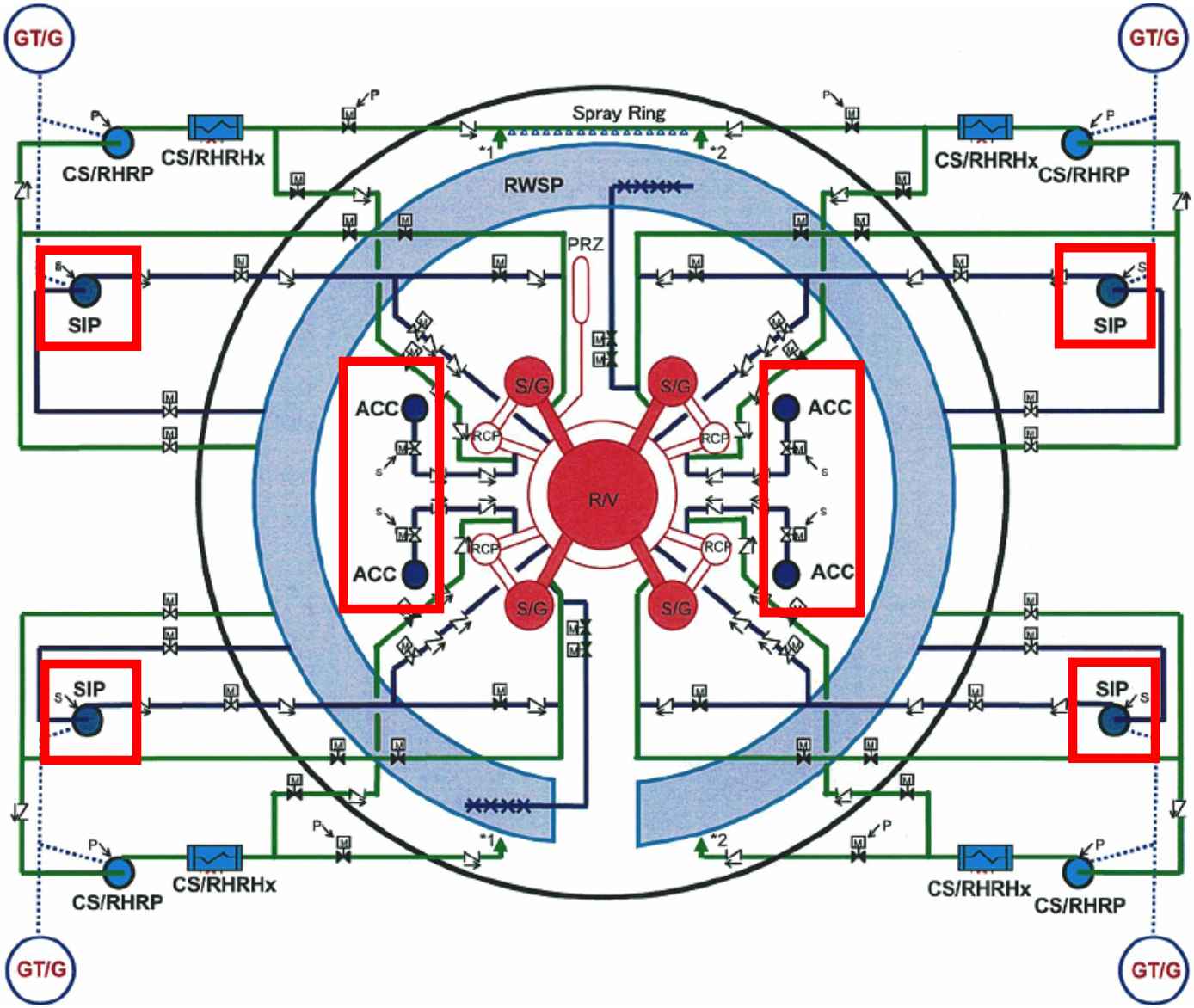

Legend

—	Emergency Core Cooing System
—	Containment Spray System and Residual Heat Removal System
SIP	Safety Injection Pump
CS/RHRP	Containment Spray / Residual Heat Removal Pump
CS/RHRHx	Containment Spray / Residual Heat Removal Heat Exchanger
ACC	Accumulator
RWSP	Refueling Water Storage Pit
GT/G	Gas Turbine Generator
R/V	Reactor Vessel
RCP	Reactor Coolant Pump
S/G	Steam Generator
PRZ	Pressurizer
S	Safety Injection Signal
P	Containment Spray Signal

Fig. 1-4

Advanced Accumulator

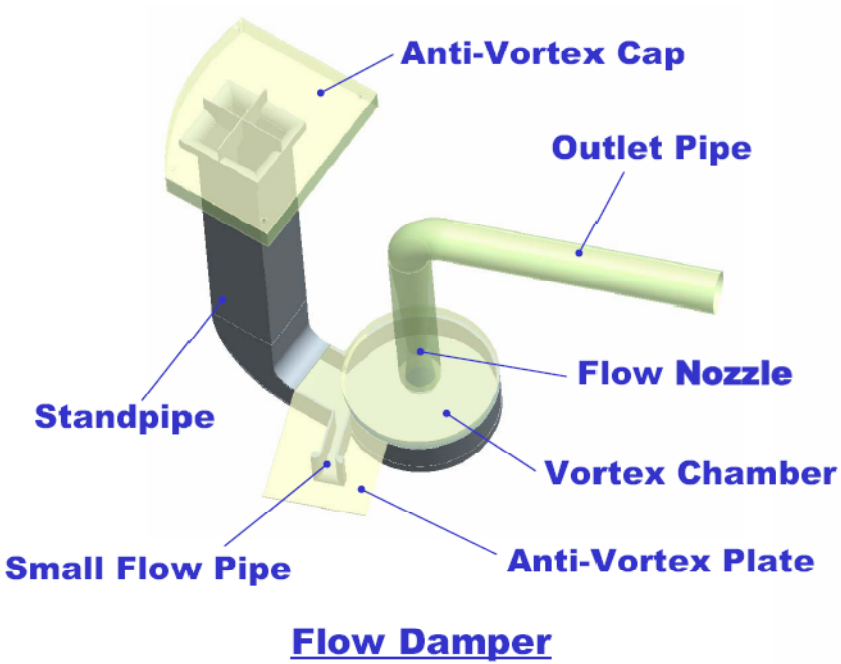

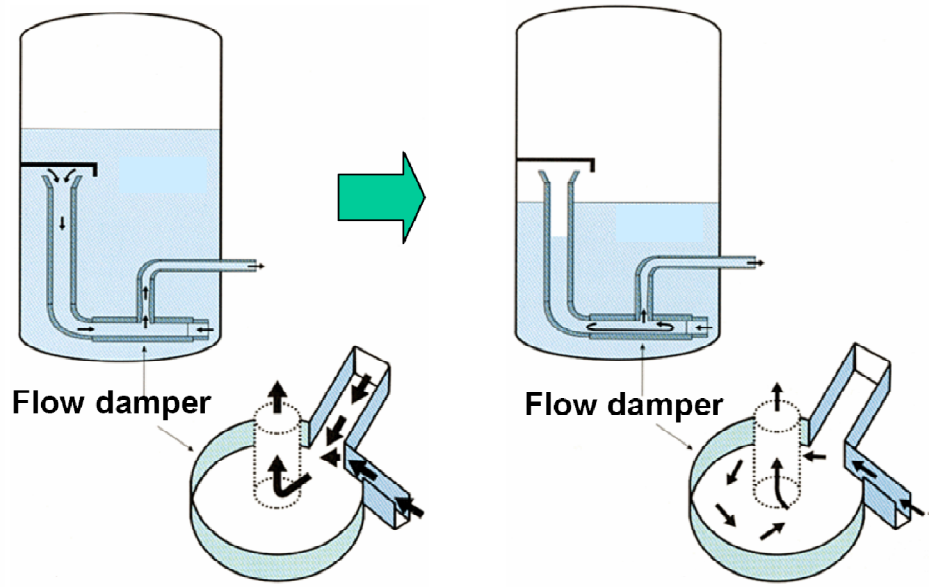

Large flow rate

Small flow rate

Safety Systems

Current 4-Loop PWR
2 Trains

APWR
4 Trains

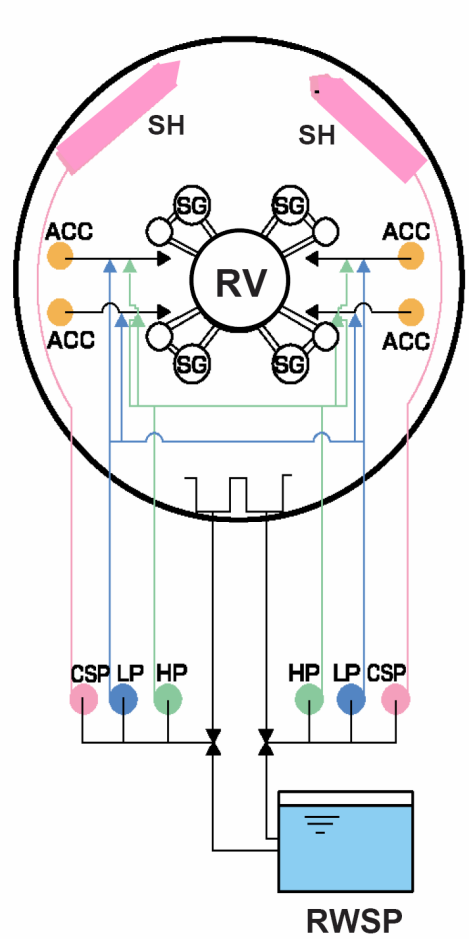

- ◆4 train (DVI)
  - → Higher Reliability
    Simplified Pipe Routing
- ◆Advanced Accumulator
  - → Elimination of LHSI
- ◆In-containment RWSP
  - → Higher Reliability

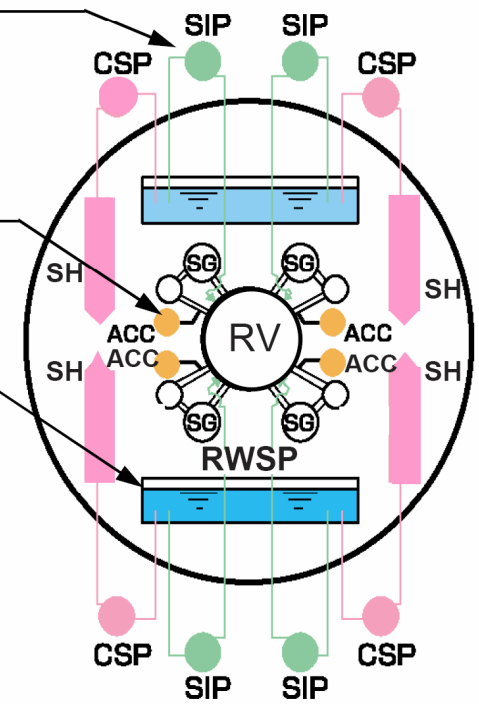

ACC	☐Accumulator
HP	☐High Head SIP
LP	☐Low Head SIP
SIP	☐Safety Injection Pump
CSP	☐Containment Spray Pump
SH	☐Spray Header
RV	☐Reactor Vessel
RWSP	☐Refueling Water Storage Pit

Fig. 1-6

Safety Train Design Philosophy

Safety systems are comprised of 4 trains. Each is a 50% capacity train.

- One train may be out of service for maintenance.
- One train may fail (single-failure criterion).
- At least two 50% capacity trains remain available to provide their design safety function for mitigating the accident.

Each safety train is independent and located within a physically separate area of the reactor building.

Table 1-5 Comparison of Instrumentation and Control Systems and Electrical Systems

Parameter	US-APWR	J-APWR	US Current four-loop
Type of I&C system	Fully digital with exception of the analog Diverse Actuation System (DAS)	Fully digital with exception of the analog Diverse Actuation System (DAS)	analog
Electric Power System			
Safety Power System			
Number of Power Generator	4	2	2
Type	Gas Turbine Generator	Diesel Generator	Diesel Generator

Table 1-5 Comparison of Instrumentation and Control Systems and Electrical Systems

Parameter	US-APWR	J-APWR	US Current four-loop
Type of I&C system	Fully digital with exception of the analog Diverse Actuation System (DAS)	Fully digital with exception of the analog Diverse Actuation System (DAS)	analog
Electric Power System			
Safety Power System			
Number of Power Generator	4	2	2
Type	Gas Turbine Generator	Diesel Generator	Diesel Generator

AC Power

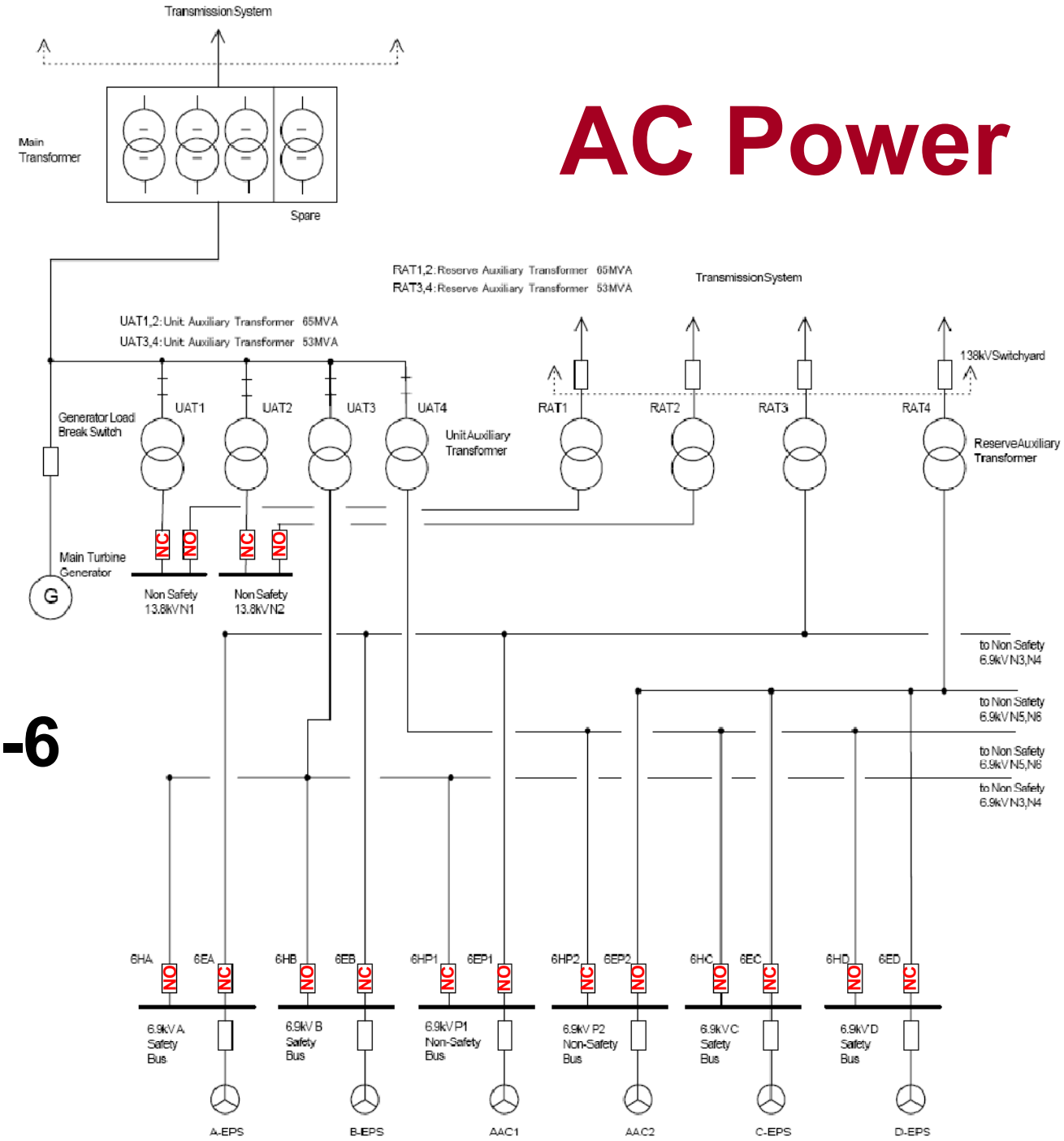

Fig. 1-6

Summary of Major Differences

Category	US-APWR	Existing PWRs
RV internals	Neutron reflector	Bolted baffle & former plates
RCS relief valves	4 code safeties 2 safety depressurization valves 1 severe-accident depressurization valve	3 code safeties 2 PORVs No counterpart
Safety Systems	4 50%-capacity trains	2 100%-capacity trains

Summary of Major Differences (cont'd)

Category	US-APWR	Existing PWRs
ECCS	High-head safety injection pumps w/ direct injection to RV Advanced accumulators w/ passive flow dampers In-containment RWSP	High- & low-head safety injection pumps w/ cold-leg injection Conventional accumulators Outside RWST
I & C	All digital; MELTAC controllers	Analog
Electrical	4 Class 1E GTGs 2 AAC GTGs	2 Class 1E EDGs Variable AAC sources