Enclosure
Attachment 3
PG&E Letter DIL-11-00X

Holtec International Report HI-2104625, "Three Dimensional Thermal-Hydraulic Analyses for Diablo Canyon Site-Specific HI-STORM System Design," Revision 5 (Non-proprietary version)

Enclosure
Attachment 3
PG&E Letter DIL-11-004

Holtec International Report HI-2104625, "Three Dimensional Thermal-Hydraulic Analyses for Diablo Canyon Site-Specific HI-STORM System Design," Revision 5
(Non-proprietary version)

HOLTEC
INTERNATIONAL

Holtec Center, 555 Lincoln Drive West, Marlton, NJ 08053
Telephone (856) 797- 0900
Fax (856) 797 - 0909

THREE DIMENSIONAL THERMAL-HYDRAULIC ANALYSES FOR DIABLO CANYON SITE-SPECIFIC HI-STORM SYSTEM DESIGN

FOR

PG&E

Holtec Report No: HI-2104625

Holtec Project No: 1073

Sponsoring Holtec Division: HTS

Report Class : SAFETY RELATED

HOLTEC INTERNATIONAL

DOCUMENT ISSUANCE AND REVISION STATUS[1]

DOCUMENT NAME:	THREE DIMENSIONAL THERMAL-HYDRAULIC ANALYSES FOR DIABLO CANYON SITE-SPECIFIC HI-STORM SYSTEM DESIGN
DOCUMENT NO.:	HI-2104625
PROJECT NO.:	1073

CATEGORY: ☐ GENERIC ☑ PROJECT SPECIFIC

Rev. No.[2]	Date Approved	Author's Initials	VIR #
5	6/15/2011	A.Mohammad	917905

DOCUMENT CATEGORIZATION

In accordance with the Holtec Quality Assurance Manual and associated Holtec Quality Procedures (HQPs), this document is categorized as a:

☑ Calculation Package[3] (Per HQP 3.2)

☐ Technical Report (Per HQP 3.2) (Such as a Licensing Report)

☐ Design Criterion Document (Per HQP 3.4)

☐ Design Specification (Per HQP 3.4)

☐ Other (Specify):

DOCUMENT FORMATTING

The formatting of the contents of this document is in accordance with the instructions of HQP 3.2 or 3.4 except as noted below:

DECLARATION OF PROPRIETARY STATUS

☑ Nonproprietary ☐ Holtec Proprietary ☐ Privileged Intellectual Property (PIP)

This document contains extremely valuable intellectual property of Holtec International. Holtec's rights to the ideas, methods, models, and precepts described in this document are protected against unauthorized use, in whole or in part, by any other party under the U.S. and international intellectual property laws. Unauthorized dissemination of any part of this document by the recipient will be deemed to constitute a willful breach of contract governing this project. The recipient of this document bears sole responsibility to honor Holtec's unabridged ownership rights of this document, to observe its confidentiality, and to limit use to the purpose for which it was delivered to the recipient. Portions of this document may be subject to copyright protection against unauthorized reproduction by a third party.

Notes

1. This document has been subjected to review, verification and approval process set forth in the Holtec Quality Assurance Procedures Manual. Password controlled signatures of Holtec personnel who participated in the preparation, review, and QA validation of this document are saved on the company"s network. The Validation Identifier Record (VIR) number is a random number that is generated by the computer after the specific revision of this document has undergone the required review and approval process, and the appropriate Holtec personnel have recorded their password-controlled electronic concurrence to the document.

2. A revision to this document will be ordered by the Project Manager and carried out if any of its contents including revisions to references is materially affected during evolution of this project. The determination as to the need for revision will be made by the Project Manager with input from others, as deemed necessary by him.

3. Revisions to this document may be made by adding supplements to the document and replacing the fTable of Contentsf, this page and the fRevision Logf.

TABLE OF CONTENTS

Section		Page
	PREFACE	ii
1.0	INTRODUCTION	1
2.0	INPUTS	7
3.0	METHODOLOGY	8
4.0	ACCEPTANCE CRITERIA	9
5.0	ASSUMPTIONS	11
6.0	COMPUTER CODES	12
7.0	CALCULATIONS AND RESULTS	13
8.0	REFERENCES	14

Appendix A: Holtec Approved Computer Program List (Total 7 pages)

Appendix B: Thermal Analysis of MPC-32 in HI-STORM SA System (Total 48 pages)

Appendix C: Thermal Analysis of MPC-32 in HI-TRAC (Total 19 pages)

Appendix D: MPC-32 Free Volume Calculations (Total 3 pages)

Appendix E: HI-TRAC Fire Event Calculations (Total 5 pages)

Appendix F: Grid Convergence Index Calculations (Total 7 pages)

Appendix G: Evaluation of Potential Error in FLUENT Code (Total 4 pages)

SUMMARY OF REVISIONS

Revision 0: Original Revision.

Revision 1: The following changes are made to the report.

- A mesh sensitivity study is performed for HI-STORM 100SA System to obtain a converged grid.
- All the off-normal and accident conditions are updated based on the converged grid temperature solution.
- A steady state thermal evaluation is performed with credit for the increased molecular weight of the cavity gases to calculate the cavity pressure during the 100% rod ruptures accident.

- Thermal evaluations are performed for both normal storage and transfer conditions with two different sets of MPC decay heat loads.
- All the pressure tables are updated to incorporate the changes due to change in the MPC cavity temperatures.
- HI-STORM in CTF calculations are revised with the Diablo Canyon maximum heat load.
- Free volume calculations are revised.
- The thermal expansion calculations during normal conditions of storage are revised.

All the changes in the report are marked by revision bars.

Revision 2: Incorporated client comments. The off-normal temperature limits are made consistent with Diablo Canyon SAR Rev. 3. All the changes in the report are marked by revision bars.

Revision 3: The footnotes in Appendix B are fixed and an editorial change was made in Section 4.0 of the main text of the report.

Revision 4: A mesh sensitivity analysis is performed for the case when HI-STORM 100SA is in the Cask Transfer Facility (CTF). An estimate of numerical uncertainty is provided by the calculation of Grid Convergence Index (GCI) for this condition and also for the normal storage condition. The GCI calculations are presented in Appendix F of the report. All the changes in the report are marked by revision bars.

Revision 5: Appendix G is added to the report to address a potential non-conservatism in the radiation solver of FLUENT version 6.3.26. All the changes in the report are marked by revision bars.

PREFACE

This work product has been labeled a *safety-significant* document in Holtec's QA System. In order to gain acceptance as a *safety significant* document in the company's quality assurance system, this document is required to undergo a prescribed review and concurrence process that requires the preparer and reviewer(s) of the document to answer a long list of questions crafted to ensure that the document has been purged of all errors of any material significance. A record of the review and verification activities is maintained in electronic form within the company's network to enable future retrieval and recapitulation of the programmatic acceptance process leading to the acceptance and release of this document under the company's QA system. Among the numerous requirements that a document of this genre must fulfill to muster approval within the company's QA program are:

- The preparer(s) and reviewer(s) are technically qualified to perform their activities per the applicable Holtec Quality Procedure (HQP).
- The input information utilized in the work effort must be drawn from referencable sources. Any assumed input data is so identified.
- All significant assumptions, as applicable, are stated.
- The analysis methodology, if utilized, is consistent with the physics of the problem.
- Any computer code and its specific versions that may be used in this work has been formally admitted for use within the company's QA system.
- The format and content of the document is in accordance with the applicable Holtec quality procedure.
- The material content of this document is understandable to a reader with the requisite academic training and experience in the underlying technical disciplines.

Once a safety significant document produced under the company's QA System completes its review and certification cycle, it should be free of any materially significant error and should not require a revision unless its scope of treatment needs to be altered. Except for regulatory interface documents (i.e., those that are submitted to the NRC in support of a license amendment and request), revisions to Holtec *safety-significant* documents to amend grammar, to improve diction, or to add trivial calculations are made only if such editorial changes are warranted to prevent erroneous conclusions from being inferred by the reader. In other words, the focus in the preparation of this document is to ensure accuracy of the technical content rather than the cosmetics of presentation.

In accordance with the foregoing, this Calculation Package has been prepared pursuant to the provisions of Holtec Quality Procedures HQP 3.0 and 3.2, which require that all analyses utilized in support of the design of a safety-related or important-to-safety structure, component, or system be fully documented such that the analyses can be reproduced at *any time in the future* by

a specialist trained in the discipline(s) involved. HQP 3.2 sets down a rigid format structure for the content and organization of Calculation Packages that are intended to create a document that is complete in terms of the exhaustiveness of content. The Calculation Packages, however, lack the narrational smoothness of a Technical Report, and are not intended to serve as a Technical Report.

Because of its function as a repository of all analyses performed on the subject of its scope, this document will require a revision only if an error is discovered in the computations or the equipment design is modified. Additional analyses in the future may be added as numbered supplements to this Package. Each time a supplement is added or the existing material is revised, the revision status of this Package is advanced to the next number and the Table of Contents is amended. Calculation Packages are Holtec proprietary documents. They are shared with a client only under strict controls on their use and dissemination.

This Calculation Package will be saved as a Permanent Record under the company's QA System.

1.0 INTRODUCTION

The HI-STORM System consists of three major cask components: a multipurpose canister (MPC), a storage overpack (HI-STORM) and a transfer cask (HI-TRAC). Pacific Gas and Electric (PG&E) uses the HI-STORM 100SA System at an Independent Spent Fuel Storage Installation (ISFSI) at the Diablo Canyon nuclear power plant site. The purpose and function of each of these major HI-STORM System components at the DC ISFSI is described in a site-specific 10 CFR 72 (Part 72) license [1] and a supporting site-specific Safety Analysis Report (SAR) [2].

The HI-STORM System, used at the Diablo Canyon site, consists of an MPC-32 placed inside the cavity of a HI-STORM 100SA overpack. The overpack is a layered cylindrical structure engineered with openings at the top and bottom for air ventilation. The MPC consists of a fuel basket inside a sealed and helium pressurized stainless steel vessel. The basket design is a matrix of square compartments designed to hold the fuel assemblies in a vertical position. The basket is a honeycomb structure of alloy steel plates with full-length edge-welded intersections to form an integral basket configuration. The basket interior cell walls are provided with neutron absorber plates (Metamic) sandwiched between the box wall and a stainless steel sheathing plate to cover the full length of the active fuel region.

The HI-STORM System is designed for long-term storage of Spent Nuclear Fuel (SNF). In this report calculations supporting the thermal evaluation of HI-STORM 100SA System, using the methodologies approved in Revision 7 of Holtec's generic HI-STORM FSAR [5], are documented. The HI-STORM 100SA thermal evaluation adopts NUREG-1536 [3] and ISG-11 guidelines [4] to demonstrate safe storage of Commercial Spent Fuel (CSF). These guidelines are stated below:

1. The fuel cladding temperature for long term storage shall be limited to 400°C (752°F).
2. The fuel cladding temperature for short-term operations shall be limited to 400°C (752°F) for high burnup fuel and 570°C (1058°F) for low burnup fuel.
3. The fuel cladding temperature should be maintained below 570°C (1058°F) for off-normal and accident conditions.

4. The internal pressure of the cask should remain within its design pressures for normal, off-normal, and accident conditions.
5. The cask materials should be maintained within their minimum and maximum temperature criteria under normal, off-normal, and accident conditions.
6. The HI-STORM System should be passively cooled.

The purpose of this calculation package is to document calculations supporting evaluation of the HI-STORM 100SA System under normal, short-term operations, off-normal and accident conditions, in compliance with the methodology approved in the HI-STORM 100 FSAR [5]. All conditions, viz. long term normal, off-normal and accident conditions, are evaluated using 3-dimensional thermal models articulated in Chapter 4 of the HI-STORM 100 FSAR [5]. The short term operations in a HI-TRAC 125D transfer cask are also evaluated using 3-dimensional thermal models. Licensing drawings for the modified HI-STORM 100SA System components [B-7 to B-9, C-6] provide all of the component dimensional details. Table 1.3 presents a listing of the primary changes, made to the generic Holtec component designs to yield the DC ISFSI designs, which can affect thermal performance. The following are the principal differences between the Diablo Canyon HI-STORM 100SA System and the generic HI-STORM 100 System, which impacts the thermal performance or requires considerations for specific thermal evaluations:

1. HI-STORM 100SA System has shortened MPC and HI-TRAC
2. HI-STORM 100SA loading operations are performed in an underground Cask Transfer Facility (CTF) and a separate thermal evaluation is required for this scenario.

1.1 Description of the HI-STORM 100SA System

The HI-STORM 100SA System is a large ventilated concrete overpack having an internal cavity for emplacement of a canister (MPC) containing Spent Nuclear Fuel (SNF). For long-term storage the MPC-32 and its contained SNF is situated inside a vertically oriented overpack. Prior to its emplacement in the HI-STORM, the MPC-32 internal space is pressurized with helium.

The HI-STORM Overpack is equipped with four large ducts at each of its bottom and top extremities. The design of the system includes an annular gap between the MPC-32 and the overpack cylindrical cavity. The ducted overpack construction, together with an engineered annular space between the MPC-32 cylinder and the HI-STORM cavity enables cooling of the MPC-32 external surfaces by natural ventilation.

The MPC-32 consists of a fuel basket having an array of square shaped fuel cells for storing spent nuclear fuel. The fuel basket and the stored fuel are enclosed in an all welded pressure boundary formed by a MPC-32 baseplate, top lid and a cylindrical shell. The interior space is required to be pressurized with helium. For this purpose the MPC-32 is initially backfilled with helium up to design-basis pressures listed in Table 1.1 for two different heat load scenarios listed in Section 1.4. This ensures an adequate helium pressure[1] to support MPC-32 internal heat transfer and also provides a stable, inert environment for long-term storage of SNF. The pressurized helium environment together with certain features engineered in the MPC-32 design described next render a very effective means of heat dissipation in the MPC-32 space by internal convection. The fuel basket design includes top and bottom plenums formed by flow holes (cut outs at the top and bottom of the basket walls to allow helium circulation) at the base and top of basket walls. Between the fuel basket and the MPC-32 shell is the downcomer space that connects to the top and bottom plenums. In this manner, the MPCs feature a fully connected helium space consisting of the fuel basket cells, top and bottom plenums and a peripheral downcomer gap.

It is apparent from the geometry of the MPC-32 that the basket metal, the fuel assemblies and its contained helium will be at their peak temperature at or near the longitudinal axis of the MPC-32. As a result of conduction along the metal walls and radiant heat exchange from the fuel assemblies to the MPC-32 metal mass the temperatures will attenuate with increasing radial distance from the axis, reaching their lowest values in the downcomer space. As a result the bulk temperatures of the helium columns in the fuel basket are elevated above the bulk temperature of the downcomer space. Since two fluid columns with different temperatures in communicative

[1] MPC absolute pressure under normal operating conditions is specified for two different heat loads in Section 1.4.

contact cannot remain in static equilibrium, the temperature field guarantees the incipience of heat transfer by internal convection.

1.2 Normal Long Term Storage, Off-Normal and Accident Conditions

Normal long term storage refers to the condition when a fully loaded MPC resides in the HI-STORM at rest in its designated storage location on the ISFSI pad, after all on-site handling and transfer operations are completed. Off-normal conditions and accident conditions are also evaluated as required by NUREG 1536 and HI-STORM FSAR [5]. Thermal evaluations of these conditions are performed using the USNRC approved methodology [5]. The methodology includes credit for internal MPC convection heat transfer has been developed and it has been successfully employed by Holtec for licensing spent fuel casks by the USNRC (Dockets 72-1014 (HI-STORM) and 72-17 (Trojan Nuclear Plant)) and Spain's regulatory authority CSN (Jose Cabrera Nuclear Plant). These evaluations are documented in Appendix B of this report.

1.3 Short Term Operations

Prior to placement in a HI-STORM overpack, an MPC-32 must be loaded with fuel, outfitted with closures, dewatered, dried, backfilled with helium and transferred to a HI-STORM module. In the unlikely event that the fuel needs to be returned to the spent fuel pool, these steps must be performed in reverse. Finally, if required, transfer of a loaded MPC-32 between HI-STORM overpacks or between a HI-STAR transport overpack and a HI-STORM storage overpack must be carried out in an assuredly safe manner. All of the above operations are short duration events that would likely occur no more than once or twice for an individual MPC-32.

The device central to performing the above short-term operations is the HI-TRAC 125D transfer cask. The HI-TRAC 125D transfer cask is a short-term host for the MPC-32; therefore it is necessary to establish that during all thermally challenging operations, the temperature limits for short-term operations are not exceeded. To ensure maximum fuel cooling the HI-TRAC transfer operations are conducted in the vertical orientation. In this manner the internal convection cooling in the MPC-32 is preserved and the fuel temperatures minimized. The

following discrete thermal scenarios involving the HI-TRAC transfer cask are evaluated:

i. Loaded MPC-32 transfer in the HI-TRAC
ii. HI-TRAC Accidents – Water Jacket Loss and Fire

The HI-TRAC thermal evaluations are presented in Appendices C, D and E of this report.

The HI-STORM loading in the Cask Transfer Facility (CTF) is also a short-term operation and is evaluated in Appendix B of this report.

1.4 Design Heat Loads

The HI-STORM 100SA is evaluated for the following decay heat scenarios:

	Q (kW)	**Storage Pattern†**	**Operating Pressure (atm)**	**Reference**
Scenario 1	28.74	Uniform, X=1	5	[1, 2]
Scenario 2	36.9	Regionalized, X=0.5	7	[5]

The existing thermal analysis in the current DC ISFSI license [2] indicate that uniform loading of 28.74kW yields the highest cask system component and contents temperature and the highest MPC internal pressures. Therefore, only Scenario 1 provides the worst case fuel cladding temperatures for the conditions allowed by DC ISFSI license. Based on the thermal evaluations presented and approved in the HI-STORM FSAR [5], a decay heat load of 36.9 kW with regionalized scheme described in [5] results in worst case fuel cladding temperatures and cavity pressures. Therefore, of all the heat load scenarios specified in [5], Scenario 2 is the most limiting and hence is the only scenario among the ones discussed in [5] that is evaluated in the current report.

1.5 Design Ambient Conditions

To evaluate the effects of ambient conditions on the HI-STORM 100SA System, the following temperatures are defined:

† The parameter X is defined in Reference 5.

(a) Normal Temperature

For evaluating the effect of ambient temperatures on long-term storage of SNF, a normal storage temperature defined as the annual average temperature of air is specified. Likewise, for including heat dissipation from HI-STORM bottom, an annual average soil temperature is specified.

(b) Off-Normal & Accident Temperatures

For evaluating the effects of temperature excursions, an Off-Normal and Accident temperature defined as a 72-hour average air temperature is specified. The 72-hour average temperature used in the definition of the off-normal temperature recognizes the considerable thermal inertia of the HI-STORM 100SA storage system, which minimizes the effect of undulations in instantaneous temperature on the storage of SNF. It is recognized that daily site temperatures may exceed the temperatures specified herein. However, for thermal evaluations to remain bounding, the time-averaged ambient temperatures specified herein must not be exceeded.

A reasonably bounding set of ambient temperatures are defined in Table 1.2 and adopted in the thermal evaluation for all design-basis analyses. It is to be noted that the ambient temperatures used in the thermal evaluations are those established for the HI-STORM 100 System, which bound the DC ISFSI conditions.

2.0 INPUTS

Inputs specific to individual calculations are documented within the calculations presented in the appendices. The global inputs define the key thermal hydraulic characteristics of an MPC loaded with Design Basis Fuel (DBF) for MPC-32 (W-17x17) [5].

The MPC is characterized by the following effective properties:

a) Fuel storage cell planar and axial conductivities
b) Fuel density and specific heat
c) Axial flow resistances

The effective properties and axial flow resistances are consistent with HI-STORM 100 FSAR [5]. Material properties reported in the HI-STORM 100 FSAR [5] are used.

3.0 METHODOLOGY

The methodologies used in all the analyses for HI-STORM 100SA documented in this report are identical to those described in the HI-STORM 100 FSAR [5]. Pressure calculations are similar to those of the HI-STORM 100 FSAR, but include additional characterization for IFBA [6], as was done in the thermal calculations reviewed by the NRC for the current Diablo Canyon ISFSI license [1]. The methodology for thermal analyses of an MPC-32 placed in the HI-STORM 100SA is described in Appendix B of this report. All the storage conditions in HI-STORM 100SA overpack are evaluated using 3-dimensional thermal models articulated in Chapter 4 of HI-STORM 100 FSAR [5]. Appendix C describes the thermal analysis of HI-TRAC transfer cask. The thermal model developed for the HI-TRAC transfer cask is also three-dimensional. Such a methodology has been adopted (i.e. 3D thermal models for HI-TRAC) in recent applications to USNRC (HI-STORM FW Docket No. 72-1032).

4.0 ACCEPTANCE CRITERIA

The thermal-hydraulic performance of the HI-STORM 100SA System must satisfy the following criteria:

- The fuel cladding temperatures should be below the ISG-11 Rev. 3 temperature limit for all scenarios.
- For Scenario 2 listed in Section 1.4, all the component temperature and MPC internal pressure must satisfy the requirements of Holtec generic licensing documents [5].
- For Scenario 1 listed in Section 1.4, all component temperature and MPC internal pressure must satisfy the requirements of the DC ISFSI SAR [2], with the following exceptions:
    A. The normal long-term storage concrete temperature limit has been increased to 300°F. An increase in the maximum normal storage temperature of concrete from 200°F to 300°F was incorporated into the HI-STORM FSAR Revision 2. The basis for the change was two reports [10] and [11]. These references provided previous research and testing to support the long-term temperature limit of 300°F. The change in the limit was permitted as long as dolomite was not used as one of the coarse aggregate materials. Holtec concrete placement procedures have incorporated these requirements since 2005. PG&E will need to ensure that their HI-STORM concrete placement procedure includes approved requirements for obtaining concrete that meet the 300°F long term limit. A review of the DC ISFSI specific design and analysis have verified that concrete properties are consistent with concrete allowed within the new limit for the design life of the components.
    B. The accident temperature limit for all the HI-STORM overpack steel is increased to 800°F. This change was proposed in HI-STORM 100 License Amendment Request 1014-3 [8] and approved by the NRC in the Safety Evaluation Report for Amendment #5 to Certificate of Compliance 72-1014 (ML082030122).
    C. The accident temperature limit for Holtite in the HI-TRAC lid is increased from 300°F to 350°F. This change was proposed in a supplement to HI-STORM 100 License Amendment Request 1014-2 [9] and approved by the NRC in the Safety Evaluation Report for Amendment #2 to Certificate of Compliance 72-1014 (ML051580522). The creation of a short-term temperature limit for Holtite-A

which is used only in the HI-TRAC 125 transfer cask, is based on test data summarized in [7]. This report was submitted to the NRC in May, 2003 on Docket 71-9261.

5.0 ASSUMPTIONS

The HI-STORM 100SA thermal analysis employs an array of conservatisms to conservatively predict the fuel, MPC and overpack temperatures. For HI-STORM 100SA System thermal evaluation a numbered list of conservatisms is provided in Appendix B. The principal assumptions that maximize HI-TRAC computed temperatures are stated in the thermal modeling discussions in Appendix C.

6.0 COMPUTER CODES AND FILES

FLUENT Version 6.3.26 computer code is used in the HI-STORM 100SA thermal calculations. The input/output files used in the HI-STORM and HI-TRAC analyses are presented in the individual appendices.

7.0 RESULTS AND CONCLUSIONS

All the calculations and results pertaining to the evaluation of normal, off-normal and accident conditions of HI-STORM 100SA System are reported in Appendix B of this report. The thermal analyses of HI-TRAC System are reported in Appendix C of this report. The Diablo Canyon specific storage system meets the requirements for processing and storing high-burnup fuel at the existing maximum cask heat load of 28.74 kW. However, a supplemental cooling system is required for the HI-TRAC containing high burnup fuel.

8.0 REFERENCES

[1] Materials License No. SNM-2511 Amendment 1, Docket 72-26, dated 10 February 2010.

[2] "Diablo Canyon Independent Spent Fuel Storage Installation Final Safety Analysis Report," Revision 3, March 2010.

[3] NUREG-1536, "Standard Review Plan for Dry Cask Storage Systems," U.S. Nuclear Regulatory Commission, January 1997.

[4] Interim Staff Guidance 11 (ISG-11), "Cladding Considerations for the Transportation and Storage of Spent Fuel", U.S. nuclear Regulatory Commission, Revision 3.

[5] "Final Safety Analysis Report for the HI-STORM 100 Cask System", Holtec Report HI-2002444, Revision 7.

[6] "Evaluation of IFBA Fuel Storage in the HI-STORM System," Holtec Position Paper DS-265, Revision 1.

[7] "Holtite A: Development History and Thermal Performance data", Holtec Report HI-2002396, Revision 3.

[8] Holtec Letter 5014612, dated December 22, 2006.

[9] Holtec Letter 5014490, dated August 6, 2003.

[10] Carette and Malhorta, "Performance of Dolostone and Limestone Concretes at Sustained High Temperatures," Temperature Effects on Concrete, ASTM STP 858.

[11] Schneider and Horvath, "Behaviour of Ordinary Concrete at High Temperature," Vienna Technical University – Institute for Building Materials and Fire Protection, Research Report Volume 9.

Table 1.1

MPC-32 HELIUM BACKFILL PRESSURE SPECIFICATIONS

Scenario*	Item	Specification
Scenario 1	Minimum Gauge Pressure	202.0 kPa @ 21.1°C Reference Temperature [29.3 psig @ 70°F Reference Temperature]
	Maximum Gauge Pressure	229.5 kPa @ 21.1°C Reference Temperature [33.3 psig @ 70°F Reference Temperature]
Scenario 2	Minimum Gauge Pressure	292.9 kPa @ 21.1°C Reference Temperature [42.5 psig @ 70°F Reference Temperature]
	Maximum Gauge Pressure	313.6 kPa @ 21.1°C Reference Temperature [45.5 psig @ 70°F Reference Temperature]

* The scenarios are listed in Section 1.4 of this report.

Table 1.2

DESIGN AMBIENT TEMPERATURES[Note 1]

Normal Temperatures Ambient Soil	 80°F 77°F
Off-Normal Ambient Temperature	100°F for 3 days
Accident Ambient Temperature	125°F for 3 days
Short Term Operation Ambient Temperature	80°F
Note 1: The temperatures tabulated herein are reasonably bounding values. Although not expected, these temperatures maybe minimally exceeded without exceeding the fuel temperature limits.	

Table 1.3

PRIMARY DESIGN DIFFERENCES BETWEEN GENERIC HI-STORM 100S VERSION B SYSTEM AND DIABLO CANYON HI-STORM 100SA SYSTEM

MPC	
Overall Height	Reduced by 9 inches
Internal Cavity Height	Reduced by 9 inches
Fuel Basket Height	Reduced by 14 inches
Closure Lid	1-7/8" × 5" C-channels mounted on bottom surface
HI-STORM Overpack	
Overall Height	Same as 100S-229
Internal Cavity Height	Same as 100S-218
Inlet Duct Height	Increased by 7 inch
Inlet Duct Width	Reduced by 3 inch
MPC Base Support	Increased by 14 inch
Duct Debris Screens	Changed from screen to perforated plate
Annulus Channels	Replaced by small guide plates
HI-TRAC Transfer Cask	
Overall Height	Reduced by 9 inches

Appendix A

Holtec Approved Computer Program List
(Total 7 pages)

HOLTEC APPROVED COMPUTER PROGRAM LIST **REV. 145 November 24, 2010**

PROGRAM (Category)	APPROVED IN USNRC PART 50 & 71/72 SER: (List docket #)	VERSION (Executable)	CERTIFIED USERS FOR "A" CODES	CODE EXPERT	REMARKS: See report indicated for specific limitations	OPERATING SYSTEM & VERSION (Service pack)	APPROVED COMPUTERS: Listed by ID	Indicate Computer ID(s) used
ANSYS (A)	DOC 50-298 DOC 72-1014	11.0	SPA, AB, CWB, RJ, PK, AL, HP, VRP, ER, IR, AIS, ZY, JZ	CWB	HI-2012627	Windows XP (2)	1017, 1018, 1019, 1039, 1060	
		12.0	SPA, AB, CWB, RJ, PK, AL, HP, VRP, ER, IR, AIS, ZY, JZ	CWB	HI-2012627	Windows XP (2)	1016, 1017	
		12.1	SPA, AB, CWB, RJ, PK, AL, HP, VRP, ER, IR, AIS, ZY, JZ	CWB	HI-2012627	Windows XP (2)	1019	
						Windows 7	1021, 1031, 1044	
CASMO (A)	DOC 50-271 DOC 71-9336	4 - 2.05.14	SPA, DMM, BDB, VIM, KB, SF, ES	SPA	HI-2104750	Windows XP (3)	1006	
		5M - 1.06.00	SPA, DMM, BDB, VIM, KB, SF, ES	SPA	HI-2104750	Windows XP (2)	1008	
Fluent (A)	DOC 50-368 DOC 72-	4.56	ER, IR, DMM, AHM, YL, INP	ER	HI-981921	Windows XP (2,3)	1016, 1022	

HOLTEC APPROVED COMPUTER PROGRAM LIST **REV. 145 November 24, 2010**

PROGRAM (Category)	APPROVED IN USNRC PART 50 & 71/72 SER: (List docket #)	VERSION (Executable)	CERTIFIED USERS FOR "A" CODES	CODE EXPERT	REMARKS: See report indicated for specific limitations	OPERATING SYSTEM & VERSION (Service pack)	APPROVED COMPUTERS: Listed by ID	Indicate Computer ID(s) used
	1014	6.3.26	ER, IR, DMM, AHM, YL, INP	DMM	HI-2084036	Windows XP (2,3)	1001, 1002, 1003, 1016, 2003	1002 1003
						Red Hat Enterprise Linux (2.6.9-5)	1004	
LS-DYNA 3D (A)	DOC 50-298 DOC 72-1014	971 (ls971sR4.2)	SPA, VRP, KPS, AIS, JZ	JZ	N/A	Windows XP (2)	1018	
		971 (ls971sR5.0)	SPA, VRP, KPS, AIS, JZ	JZ	N/A	Windows 7	1032	
		971 (mpp971dR5.0)	SPA, VRP, KPS, AIS, JZ	JZ	N/A	Windows Server HPC 2008	1033, 1034, 1035, 1036, 1037	

PROGRAM (Category)	APPROVED IN USNRC PART 50 & 71/72 SER: (List docket #)	VERSION (Executable)	CERTIFIED USERS FOR "A" CODES	CODE EXPERT	REMARKS: See report indicated for specific limitations	OPERATING SYSTEM & VERSION (Service pack)	APPROVED COMPUTERS: Listed by ID	Indicate Computer ID(s) used
		971 (mpp971s R5.0)	SPA, VRP, KPS, AIS, JZ	JZ	N/A	Windows Server HPC 2008	1033, 1034, 1035, 1036, 1037	
MCNP (A)	DOC 50-368 DOC 71-9336	4A	SPA, DMM, BDB, SF, ES, VIM, KB	KB	HI-2104750	Windows XP (2,3)	1006, 1008, 1009, 1010, 2001, 2002, 2004, 2005, 2006, 2007	
						Windows 7	1011, 1013, 1014, 1015, 1030, 1051	

PROGRAM (Category)	APPROVED IN USNRC PART 50 & 71/72 SER: (List docket #)	VERSION (Executable)	CERTIFIED USERS FOR "A" CODES	CODE EXPERT	REMARKS: See report indicated for specific limitations	OPERATING SYSTEM & VERSION (Service pack)	APPROVED COMPUTERS: Listed by ID	Indicate Computer ID(s) used
		5.1.40	SPA, DMM, BDB, SF, ES, VIM, KB	KB	HI-2104750	Windows XP (2,3)	1006, 1008, 1009, 1010, 1012, 2001, 2002, 2004, 2005, 2006, 2007	
						Windows 7	1011, 1014, 1015	

HOLTEC APPROVED COMPUTER PROGRAM LIST								REV. 145 November 24, 2010
PROGRAM (Category)	**APPROVED IN USNRC PART 50 & 71/72 SER: (List docket #)**	**VERSION (Executable)**	**CERTIFIED USERS FOR "A" CODES**	**CODE EXPERT**	**REMARKS: See report indicated for specific limitations**	**OPERATING SYSTEM & VERSION (Service pack)**	**APPROVED COMPUTERS: Listed by ID**	**Indicate Computer ID(s) used**
		5.1.51	SPA, DMM, BDB, SF, ES, VIM, KB	KB	HI-2104750	Windows XP (2,3)	1006, 1008, 1009, 1010, 2001, 2002, 2003, 2005, 2006, 2007	
						Windows 7	1014, 1015, 1051	
SCALE: Modules ORIGEN-S & SAS2H	DOC 50-346 DOC 71-9336	4.3	N/A	KB	N/A	Windows 2000 (2)	1050	
		4.4	N/A	KB	N/A	Windows XP (2,3)	1006, 1009, 1010, 2004, 2005, 2007	
Visual	DOC 50-133	2004	N/A	AIS,	N/A	Windows XP (2)	1017	

HOLTEC APPROVED COMPUTER PROGRAM LIST 24, 2010							REV. 145 November	
PROGRAM (Category)	**APPROVED IN USNRC PART 50 & 71/72 SER: (List docket #)**	**VERSION (Executable)**	**CERTIFIED USERS FOR "A" CODES**	**CODE EXPERT**	**REMARKS: See report indicated for specific limitations**	**OPERATING SYSTEM & VERSION (Service pack)**	**APPROVED COMPUTERS: Listed by ID**	**Indicate Computer ID(s) used**
Nastran	DOC 72-27			CWB		Windows 7	1044, 1045	

Appendix B

Thermal Analysis of MPC-32 in HI-STORM 100SA System
(Total 48 pages)

B.1 INTRODUCTION

In this appendix, thermal evaluations of MPC-32 fuel basket placed in HI-STORM 100SA system using three-dimensional CFD models are presented. These 3-D thermal models incorporate the 3-zone flow resistance model articulated in a companion Holtec report [B-1]. Normal storage analyses are performed for two different scenarios listed in Section 1.4. Off-normal and accident analyses are also performed and results are presented in this appendix.

B.2 METHODOLOGY AND ASSUMPTIONS

One of the central objectives in the design of the HI-STORM 100SA system is to ensure that all SNF discharged from the reactor and not yet loaded into dry storage systems can be stored in a HI-STORM 100SA MPC. The methodology used in the all of the analyses documented in this appendix are identical to those described in the USNRC approved HI-STORM 100 FSAR [B-2]. To ensure an adequate representation of the features of MPC-32, fuel basket within MPC-32 and the HI-STORM 100SA system, a quarter-symmetric 3-D geometric model of the MPC is constructed using the FLUENT CFD code pre-processor (Gambit) [B-3], as shown in Figure B.2.2. Transport of heat from the heat generation region (fuel assemblies) to the outside environment (ambient air or ground) is analyzed broadly using three-dimensional models. The 3-D models implemented to analyze the HI-STORM 100SA system have the following key attributes:

1. The interior of the MPC is a 3-D array of square shaped cells inside an irregularly shaped basket outline confined inside the cylindrical space of the MPC cavity.
2. The fuel bundle inside the fuel cell for the PWR fuel assemblies are replaced by an equivalent porous media using the flow impedance properties computed using a rigorous (CFD) approach [B-1]. The equivalent effective thermal properties of the porous medium are the same as that used in Reference B-2.
3. The internals of the MPC cavity, including the basket cross-section, bottom flow holes and plenums are modeled explicitly.
4. The stainless steel plates in the MPC basket wall have Metamic panels and sheathing attached [B-7]. The arrangement of metal layers results in the composite wall having

different thermal conductivities in the in-plane (parallel to panel) and out-of-plane (perpendicular to panel) directions. The effective thermal properties of the basket sandwich are consistent with the values used in the thermal evaluations supporting Reference B-2.

5. **[PROPRIETARY**

   ]

6. The inlet and outlet vents in the HI-STORM 100SA overpack are modeled explicitly as shown in Figure B.2.2.
7. The model includes all three modes of heat transfer – conduction, convection and radiation.
8. For including MPC internal convection heat transfer, the benchmarked solution methodologies described in a Holtec topical report [B-6] is employed. The helium flow within the MPC is modeled as laminar.
9. Surface to surface thermal radiation heat transfer is modeled **[PROPRIETARY**] in FLUENT.
10. The airflow through the annular space between the MPC and the overpack is modeled as **[PROPRIETARY**] to incorporate the effect of air turbulence on the systems thermal performance. This model is approved by USNRC for HI-STORM 100 [B-2].
11. Insolation on the outer surface of HI-STORM 100SA is conservatively based on the 12-hour levels prescribed in 10CFR71 averaged on a 24-hours basis.
12. The flow resistance of Westinghouse 17x17 fuel assemblies calculated using rigorous CFD methods [B-1] are used in the thermal analyses. **[PROPRIETARY**

]

13. CFD best practice guidelines (BPG) are used to perform the thermal evaluation of the HI-STORM system to obtain the discretization error. An estimate of numerical uncertainty of the results and grid convergence is performed using the grid convergence index (GCI). Grid sensitivity studies are performed as discussed in Subsections B.5.1.2 and B.5.5 to assess uncertainty in the predicted results in the HI-STORM thermal model and HI-STORM in the CTF thermal model, respectively.

A cross-section of the 3-D model of the HI-STORM 100SA system loaded with an MPC-32 is illustrated in Figure B.2.1. The 3-D model has the following major assumptions that render the results conservative.

1) The fuel bundles are generating heat at the limiting heat loads defined in Section 1.4 of this report.
2) Axial dissipation of heat by the fuel pellets is neglected.
3) Axial dissipation of heat by radiation in the fuel bundle is neglected.
4) The most severe environmental factors for long-term normal storage - ambient temperature of 80°F and 10CFR71 insolation levels - were coincidentally imposed on the system.
5) The thermosiphon effect in the MPC-32, which is intrinsic to the HI-STORM 100SA fuel basket design, is included in the thermal analyses.
6) For simplicity, the MPC basket flow holes are modeled as rectangular openings with understated flow area.
7) The absorbtivity of the external surfaces of the HI-STORM 100SA is assumed to be equal to 1.0. The emissivity of the painted carbon steel surface is set as 0.85, which is an approved and conservative value.
8) No credit is taken for contact between fuel assemblies and the MPC basket wall or between the MPC basket and the basket supports. The fuel assemblies and MPC-32 basket are conservatively considered to be in concentric alignment.
9) The fuel assembly length is conservatively modeled to be equal to the fuel basket length. This is conservative because it maximizes the flow resistance of the fuel region. However,

the length of the active fuel is modeled exactly the same as the active fuel height of a Westinghouse 17x17 fuel assembly.

10) To understate MPC internal convection heat transfer, the MPC helium pressure[1] is understated. The minimum operation pressure, 7 atm absolute, is set as the operation pressure for Scenario 2 in Section 1.4 while it is set as 5 atm absolute for Scenario 1 in Section 1.4. During accident conditions, the MPC pressure is higher than this minimum MPC absolute pressure. Conservatively, the higher pressure is not credited in the thermal evaluations of the accidents.

11) Heat dissipation by fuel basket peripheral supports is neglected.

12) The MPC-32 free volume for pressure calculations is conservatively understated by using bounding volume of basket supports and fuel weight.

13) The CTF is a steel cylinder backed by concrete. **[PROPRIETARY**

]

B.3 INPUT DATA

The principal input data for the thermal-hydraulic evaluations of the MPC-32 placed in HI-STORM 100SA overpack, used in these analyses, are taken from design drawings [B-7, B-8, B-9 and B-10]. The input data used for the simulation of the Multi-purpose Canister (MPC) and the fuel assemblies, stored in MPC-32, are obtained from References B-1 and B-2. The physical properties of materials present within the HI-STORM 100SA system, such as carbon steel, stainless steel, concrete, air and helium, are reported in Reference B-2. The effective properties of the fuel and basket composite wall are consistent with the values used in the thermal evaluations supporting the HI-STORM 100 FSAR [B-2]. An MPC internal operating pressure of 7 atmospheres absolute is used in the calculations pertaining to Scenario 2 in Section 1.4,

[1] MPC absolute pressure is 7 atm (min.) under normal operating conditions (design heat load and normal ambient temperature).

whereas an operating pressure of 5 atmospheres absolute is used for the DC ISFSI licensed heat load (Scenario 1 in Section 1.4). The design ambient temperature used in the analysis is 80°F. The bottom of the HI-STORM 100SA overpack base is assumed supported on a subgrade at 77°F [B-2]. 10CFR71 insolation levels were coincidentally imposed on the system

The fuel assembly axial burnup distribution used in the analysis is provided in Reference B-2. Surface emissivity data for key materials of construction are also provided in Reference B-2. The emissivity properties of painted external surfaces are generally excellent. In the HI-STORM 100SA thermal analysis, an emissivity of 0.85 is applied to painted surfaces. A solar absorptivity coefficient of 1.0 is applied to all exposed overpack surfaces. Literature data on the surface emissivity of stainless steel material are widely available. Values as high as 0.80 [B-12] have been reported in the literature. Conservatively, a lower value of 0.587 [B-4], which is typical of oxidized stainless steel, has been used for plate, and an even lower value of 0.36 [B-4] has been used for machined forgings in these evaluations.

The spent fuel assemblies inside fuel storage cells are modeled as a homogeneous porous media. Separate CFD calculations are performed to determine the pressure drop characteristics for flow of helium through the fuel assemblies and the fuel basket. The inputs to the FLUENT CFD model to simulate the pressure drop through the porous media are detailed in Reference B-1. The HI-STORM 100SA system is evaluated for different heat load scenarios as specified in Section 1.4 of the main report.

B.4 COMPUTER PROGRAM AND FILES

The computer code FLUENT Version 6.3.26 [B-3] is used in these thermal calculations. A list of computer files supporting the bounding (licensing basis) calculations is provided below.

GAMBIT

```
Directory of G:\Projects\1073\REPORTS\Thermal Reports\HI-STORM\gambit

09/16/2010  03:18 PM        259,686,400    DC-HI-STORM-finest-CTF-28.74kw.dbs
09/16/2010  03:21 PM        210,680,792    DC-HI-STORM-finest-CTF-28.74kw.msh
04/12/2011  05:05 PM        254,803,968    CTF-28.74kw-mesh1.dbs
04/12/2011  05:14 PM        202,047,084    CTF-28.74kw-mesh1.msh
04/11/2011  04:37 PM        268,435,456    CTF-28.74kw-mesh3.dbs
04/11/2011  04:44 PM        234,651,174    CTF-28.74kw-mesh3.msh
```

```
04/15/2010  02:31 PM       180,355,072    DC-HI-STORM-SPACER.dbs
04/15/2010  02:30 PM        87,598,673    DC-HI-STORM-SPACER.msh
05/20/2010  10:15 AM       179,306,496    DC-HI-STORM.dbs
05/20/2010  10:19 AM        88,313,369    DC-HI-STORM.msh
06/15/2010  04:24 PM       187,695,104    DC-HI-STORM-fine.dbs
06/15/2010  04:23 PM       102,146,459    DC-HI-STORM-fine.msh
06/15/2010  08:51 PM       188,743,680    DC-HI-STORM-finer.dbs
06/15/2010  08:53 PM       107,679,695    DC-HI-STORM-finer.msh
06/16/2010  01:41 PM       210,763,776    DC-HI-STORM-finest.dbs
06/16/2010  01:40 PM       147,665,477    DC-HI-STORM-finest.msh
```

FLUENT

Normal Onsite Storage

```
Directory of G:\Projects\1073\REPORTS\Thermal Reports\HI-STORM\fluent\steady-
state

04/20/2010  05:07 PM        50,692,154    DC-HI-STORM-X=0.5.cas
03/24/2010  03:12 PM       821,838,647    DC-HI-STORM-X=0.5.dat
```

HI-STORM in CTF (Scenario 1)

```
Directory of G:\Projects\1073\REPORTS\Thermal Reports\HI-STORM\fluent\steady-
state

09/20/2010  10:16 AM       118,935,523    DC-HI-STORM-finest-CTF-28.74kw.cas
09/17/2010  08:40 AM     1,815,636,840    DC-HI-STORM-finest-CTF-28.74kw.dat
```

Sensitivity Study of HI-STORM in CTF

```
Directory of G:\Projects\1073\REPORTS\Thermal Reports\HI-STORM\fluent\CTF-
mesh sensitivity

04/13/2011  09:06 AM       112,546,942    CTF-28.74kw-mesh1.cas
04/13/2011  05:49 AM     1,734,709,623    CTF-28.74kw-mesh1.dat
04/18/2011  04:52 PM       128,354,280    CTF-28.74kw-mesh3.cas
04/12/2011  08:44 AM     1,935,321,440    CTF-28.74kw-mesh3.dat
```

Sensitivity Study of Fuel Spacer

```
Directory of G:\Projects\1073\REPORTS\Thermal Reports\HI-STORM\fluent\steady-
state

04/20/2010  05:15 PM        50,258,200    DC-HI-STORM-SPACER.cas
04/15/2010  08:21 PM       815,209,407    DC-HI-STORM-SPACER.dat
```

Grid Sensitivity Studies

```
Directory of G:\Projects\1073\REPORTS\Thermal Reports\HI-STORM\fluent\Grid
Sensitivity

06/18/2010  08:49 AM        57,927,518    DC-HI-STORM-FINE-36.9kw.cas
06/18/2010  04:56 AM       914,718,131    DC-HI-STORM-FINE-36.9kw.dat
06/18/2010  02:13 PM        60,833,242    DC-HI-STORM-FINER-36.9kw.cas
06/18/2010  02:14 PM       952,338,328    DC-HI-STORM-FINER-36.9kw.dat
06/17/2010  04:06 PM        83,170,154    DC-HI-STORM-FINEST-36.9kw.cas
06/17/2010  03:45 PM     1,310,907,908    DC-HI-STORM-FINEST-36.9kw.dat
```

Lower Heat Load (Scenario 1)

Directory of G:\Projects\1073\REPORTS\Thermal Reports\HI-STORM\fluent\
Q=28.74kw

06/21/2010	08:10 AM	83,170,123	DC-HI-STORM-FINEST-28.74kw.cas
06/21/2010	08:11 AM	1,310,907,908	DC-HI-STORM-FINEST-28.74kw.dat

100% Fuel Rod Rupture
Directory of G:\Projects\1073\REPORTS\Thermal Reports\HI-STORM\fluent\100pct-rod-rupture

06/24/2010	08:41 AM	83,170,495	DC-HI-STORM-FINEST-36.9kw-100RR.cas
06/24/2010	02:07 AM	1,310,907,908	DC-HI-STORM-FINEST-36.9kw-100RR.dat

Partial Duct Blockage (Off-Normal)
Directory of G:\Projects\1073\REPORTS\Thermal Reports\HI-STORM\fluent\Partial-Duct-Blocked

09/15/2010	05:11 PM	50,692,011	DC-HI-STORM-PDB.cas
09/15/2010	05:11 PM	821,798,979	DC-HI-STORM-PDB.dat

All Ducts Blocked (Accident)
Directory of G:\Projects\1073\REPORTS\Thermal Reports\HI-STORM\fluent\All-Ducts-Blocked

04/19/2010	07:06 PM	842,216,181	DC-HI-STORM-ADB-115200.dat
04/13/2010	08:47 AM	50,691,505	DC-HI-STORM-ADB.cas

Fire (Accident)
Directory of G:\Projects\1073\REPORTS\Thermal Reports\HI-STORM\fluent\fire

04/15/2010	11:41 AM	841,772,997	DC-HI-STORM-fire-240.dat
04/21/2010	09:57 AM	50,693,126	DC-HI-STORM-fire.cas
05/13/2010	08:19 PM	841,790,858	DC-HI-STORM-postfire-111600.dat
04/17/2010	09:26 PM	841,811,399	DC-HI-STORM-postfire-1800.dat
04/19/2010	08:03 AM	841,811,399	DC-HI-STORM-postfire-3600.dat
05/04/2010	02:52 PM	50,692,318	DC-HI-STORM-postfire.cas

UDF
Directory of G:\Projects\1073\REPORTS\Thermal Reports\HI-STORM\fluent

03/04/2010	06:05 PM	2,407	udf-diablo-X=0.5.c
09/15/2010	05:24 PM	2,689	udf-diablo-28.74kw.c

MISCELLANEOUS

Directory of G:\Projects\1073\REPORTS\Thermal Reports\HI-STORM

12/14/2010	02:05 PM	15,872	heat-gen-rate.xls
12/06/2010	05:05 PM	38,400	mpc_pres_R1.xls

B.5 RESULTS AND CONCLUSIONS

B.5.1 Normal Long-Term Storage Temperatures

B.5.1.1 Initial Evaluation

Initial calculations were performed using a baseline mesh (see section B.5.1.2 below for mesh sensitivity studies) for Scenario 2 defined in Section 1.4 of the main report. The storage scenario was adopted for grid sensitivity studies (Section B.5.1.2). The temperatures of all the components of the MPC and HI-STORM 100SA from the normal storage baseline mesh evaluation are reported in Table B.5.2 and are below their temperature limits [B-2].

B.5.1.2 Grid Sensitivity Studies

The HI-STORM 100SA is engineered with flow passages to facilitate heat dissipation by ventilation action. During fuel storage ambient air is drawn from intake ducts by buoyancy forces generated by the heated column of air in the HI-STORM annulus. The upward moving air extracts heat from the MPC external surfaces by convection heat transfer. As the vast majority of the heat is removed by annulus air flow, the adequacy of the grid deployed to model annulus flow and heat transfer must be confirmed.

The grid discretization of the MPC spaces and the HI-STORM/MPC annulus region must be sufficient to insure a grid-independent solution. Because the flow field in the annulus is in the turbulent transition regimes, the grid size and distribution are critical to insuring a converged solution. The mesh sensitivity study was accordingly performed on the annulus region outside the MPC and the grid size in the axial direction within the MPC. All the mesh sensitivity analyses were carried out for the 36.9 kW design maximum heat load (Scenario 2 in Section 1.4).

B.5.1.2.1 HI-STORM Annulus Radial Mesh Distribution Studies

The HI-STORM 100SA annulus grid sensitivity results are tabulated below. [**PROPRIETARY**]Three different grids are generated to study the effect of mesh refinement

in the annulus region on the predicted temperatures. The table below summarizes the mesh used and the result obtained.

Mesh	Number of Radial Cells	y^+	PCT (°C)	Permissible Limit (°C)	Clad Temperature Margin (°C)
Baseline					
Fine					
Finer					
Note 1: The y^+ reported in the third column above is a measure of grid adequacy provided by the FLUENT code. Values of y^+~1 indicate an adequate level of mesh refinement is reached to resolve the viscosity affected region near the wall. **[PROPRIETARY** **]**					

As can be seen from the above table, the thermal solution is sensitive to the grid density in the annulus region. The above results show that finer mesh is reasonably converged. To provide further assurance of convergence, the sensitivity results are evaluated in accordance with the ASME Journal procedure for control of numerical accuracy [B-21]. Towards this end the Grid Convergence Index (GCI), which is a measure of the solution uncertainty, is computed in Appendix F of this report. The GCI for the finer grid **[PROPRIETARY]** computes to be **[PROPRIETARY]** which provides further assurance of grid convergence. **[PROPRIETARY**

]

B.5.1.2.2 Fuel Region Axial Mesh Studies

In addition to employing the finer mesh in the annulus region, the fuel region axial mesh density was also increased. A summary of these studies is provided below:

Mesh	Number of Axial Cells	PCT (°C)	Permissible Limit (°C)	Clad Temperature Margin (°C)
Finer			400	
Finest			400	
Note 1: As explained below the finest grid is adopted for thermal evaluation of the HI-STORM 100SA.				

The above results show that the solution is essentially unchanged by further grid refinement in the axial direction.

B.5.1.2.3 Applying the Results of the Grid Sensitivity Studies

Based on the above results, finest grid layout is adopted for the normal storage thermal analysis of the HI-STORM 100SA. The temperatures of all the components of the MPC and HI-STORM 100SA for the finest mesh are reported in Table B.5.2 and are compared with the baseline mesh results. The temperature difference due to mesh refinement is also reported in Table B.5.2. The finest mesh was used in the analysis of HI-STORM in the CTF under Scenario 1 conditions.

To address the effect of grid sensitivity on all the other off-normal and accident conditions, the results for these conditions presented in this report were calculated using baseline mesh and then the temperature adder representing the mesh density studies, as shown in Table B.5.2, were applied. This methodology on the grid sensitivity evaluation is consistent with the methodology supplied to USNRC for mesh studies under HI-STORM FW (Docket No. 72-1032).

B.5.1.3 Thermal Evaluations supporting DC ISFSI License (Scenario 1)*

This evaluation was performed to support the Diablo Canyon ISFSI license that loads up to a uniform heat of 28.74 kW. The finest mesh that results in highest cladding and component temperatures during normal on-site storage is used to evaluate the MPC-32 in HI-STORM 100SA with a uniform heat load of 28.74 kW and a helium backfill of 29.3 psig at 70°F (Table 1.1). This heat load is also based on HI-STORM 100 CoC, Amendments 1 to 4 [B-16]. The operating pressure inside the MPC used in the analysis is 5 atmospheres absolute. The peak cladding temperature result of this evaluation is tabulated in Table B.5.13. The fuel, MPC and HI-STORM component temperatures obtained for Scenario 2 (see Section 1.4) bounds the other decay heat scenario evaluated. Therefore, all the off-normal and accident evaluations presented in this report are performed for this limiting scenario except for the HI-STORM in the CTF condition, which is evaluated for Scenario 1.

* See Section 1.4 for Scenario 1.

B.5.2 Thermal Expansion Computations

In this subsection, thermal expansions of free-standing HI-STORM 100SA components in the radial and axial directions are computed. The calculations address the following thermal expansions:

a) Fuel Basket-to-MPC Radial Growth
b) Fuel Basket-to-MPC Axial Growth
c) MPC-to-Overpack Radial Growth
d) MPC-to-Overpack Axial Growth

(a) Fuel Basket-to-MPC Radial Growth

The two potential points that could be impacted by differential thermal expansion are at the touch points between the basket and the supports (Method 1), and between the corner of the basket and the MPC shell (Method 2). The radial growth of the fuel basket relative to the MPC (δ) upon heating from a 70°F reference temperature (T_o) to storage temperatures is computed by the above mentioned two different methods and is reported as follows:

Method 1:

Method 1 evaluates the thermal expansion between the basket and the basket supports. To determine the limiting thermal expansion it is first necessary to determine the minimum MPC basket internal radius. Since the minimum radius is based on the gap between the basket and the shell, the point A, which is the maximum basket radius, must be determined. The panel at point A is beveled at the edge as shown in the drawing [B-7]. The dimension of the farthest point is calculated as follows:

L = 55.95 in	[B-18]	Maximum cell panel 1B dimension
W = 37.28 in	[B-18]	Maximum width of cells 1-4
C = 0.1875 in	[B-7]	Minimum chamfer dimension

$$R_{max} = \sqrt{\left(\frac{L}{2}\right)^2 + \left(\frac{W}{2} - C\right)^2} = 33.513 \text{ in (Dimension of the farthest point on the basket)}$$

A conservatively lower minimum radial gap between the basket and MPC shell of 0.07 in as compared to 0.08 in [B-19] is used in order to reduce the minimum inner radius of MPC shell and thereby maximizing the differential thermal expansion.

G_{min} = 0.07 in [B-19] (minimum radial gap between the basket and MPC shell, conservatively lower)

R_1 = 28.13 in [B-18] (Half of maximum width of the widest basket panel)

$R_3 = R_{max} + G_{min}$ = 33.583 in (Minimum inner radius of MPC shell)

The configuration of the MPC in the subject area is on the gap between the supports, therefore with the minimum shell radius, the width of the basket support will be:

[PROPRIETARY] [B-19](Minimum spacing between the supports including the tolerance)

[PROPRIETARY] (Width of basket support)

The temperatures T_1, T_2 and T_3 are obtained from FLUENT case and data file "DC-HI-STORM-FINEST-36.9kw" listed in Section B.4. α_1, α_2 and α_3 are the coefficients of thermal expansion of alloy-X at temperatures T_1, T_2 and T_3 respectively.

T_0 = 70°F (Reference temperature)
T_1 = 685°F (Radial average fuel basket temperature along the widest panel i.e. panel 1, at the hottest axial location – see Figure B.5.1)
T_2 = 580°F (Maximum temperature of the basket support at the hottest axial location)
T_3 = 464°F (MPC shell temperature at the hottest axial location)

$\alpha_1 = 9.76\text{x}10^{-6}\ {}^{\circ}\text{F}^{-1}$ [B-2]
$\alpha_2 = 9.60\text{x}10^{-6}\ {}^{\circ}\text{F}^{-1}$ [B-2]
$\alpha_3 = 9.28\text{x}10^{-6}\ {}^{\circ}\text{F}^{-1}$ [B-2]

The radial thermal expansion δ is calculated using the equation below:

$$\delta = R_1\alpha_1(T_1 - T_0) + H\alpha_2(T_2 - T_0) - R_3\alpha_3(T_3 - T_0) \quad \text{---------- (Eq. B.5.2)}$$

Substituting in eq. B.5.2, the net thermal expansion is δ = 0.0723 inch. The cold radial gap between the widest panel and basket support is 0.0925 inch (calculated as R_3-R_1-H).

Method 2:

This method is to calculate the net thermal expansion of the farthest point on the basket i.e. point A as shown in Figure B.5.1. The net thermal expansion in this method is calculated based on the combined thermal expansion of Panel 1 and Panel 2 (see Figure B.5.1). The calculations are shown below:

Radial Thermal Expansion of the MPC Shell

$R_3 = 33.583$ in (Minimum inner radius of MPC shell, see Method 1)

$T_3 = 464^oF$ (Maximum MPC shell temperature at the hottest axial location)

$\alpha_3 = 9.28x10^{-6}\ ^oF^{-1}$ [B-2] (coefficient of thermal expansion of alloy-X at temperature T_3)

$\delta_{shell} = R_3\alpha_3(T_3-T_0) = 0.123$ in

Thermal expansion of panel 1

$R_1 = 55.95/2 = 27.975$ in [B-7]

$T_1 = 685^oF$ (Radial average fuel basket temperature along the widest panel i.e. panel 1, at the hottest axial location)

$\alpha_1 = 9.76x10^{-6}\ ^oF^{-1}$

$\delta_1 = R_1\alpha_1(T_1-T_0) = 0.1679$ in

Thermal expansion of panel 2

$R_2 = 37.28/2 = 18.64$ in [B-7]

$T_2 = 556^oF$ (Radial average fuel basket temperature along panel 2 at the hottest axial location)

$\alpha_2 = 9.5x10^{-6}\ ^oF^{-1}$

$\delta_2 = R_2\alpha_2(T_2-T_0) = 0.0861$ in

All the temperatures are obtained from FLUENT case and data file "DC-HI-STORM-FINEST-36.9kw" listed in Section B.4.

Net thermal expansion of point A

$$\delta_{net} = \sqrt{\delta_1^2 + \delta_2^2}$$

$\delta_{net} = 0.1887$ in

Radial thermal expansion

$$\delta = \delta_{net} - \delta_{shell}$$

The net thermal expansion is $\delta = 0.0655$ inch. The worst case thermal expansion is lower than the minimum radial gap between the fuel basket and MPC shell (i.e. 0.08 inch). Since the radial gap between the basket and MPC is smaller in Method 2, the thermal expansion obtained from Method 2 is reported in Table B.5.3.

(b) Fuel Basket-to-MPC Axial Growth

The axial growth of the fuel basket relative to the MPC (δ_2) upon heating from a 70°F reference temperature to storage temperatures is computed as follows:

$$\delta_2 = H_b\alpha_1[T_1 - T_o] - H_{cav}\alpha_2[T_2 - T_o] \qquad \text{---------- (Eq. B.5.3)}$$

Where:

- H_b: Maximum fuel basket height
- H_{cav}: Minimum MPC cavity height
- α_1, α_2: Coefficients of thermal expansion for fuel basket and MPC shell at T_1 and T_2 respectively for Alloy-X
- T_1: Maximum average fuel basket temperature along the axial direction
- T_2: Average MPC shell inner surface temperature

For conservatism in computing δ_2, the fuel basket thermal expansion coefficient (α_1) is overstated and that of MPC (α_2) understated. The temperatures T_1 and T_2 are obtained from FLUENT case and data file "DC-HI-STORM-FINEST-36.9kw" listed in Section B.4. The required data for computing δ_1 is provided below:

$\alpha_1 = 9.50*10^{-6}$ °F^{-1} (Table 3.3.1 [B-2])
$\alpha_2 = 9.10*10^{-6}$ °F^{-1} (Table 3.3.1 [B-2])
$H_b = 162.625$ in [B-18]
[PROPRIETARY] (Minimum MPC cavity height including the fuel spacer)
[PROPRIETARY] (Maximum height of the fuel spacer)
$H_{cav} = H_2 - H_1 = 163.5625$ in
$T_1 = 515$°F (conservatively overstated)
$T_2 = 360$°F (conservatively understated)
$T_o = 70$°F

Substituting the above data in Eq. B.5.3, the fuel basket axial growth is computed as $\delta_2 = 0.256$ in. The cold axial gap between the fuel basket and MPC is 0.9375 in.

c) MPC-to-Overpack Radial Growth

The radial growth of the MPC shell residing in the HI-STORM relative to the overpack upon heating from a 70°F reference temperature to storage temperatures is computed as follows:

$$\theta_1 = R_{shell}\alpha_1(T_1 - T_o) + R_g\alpha_3(T_3 - T_o) - R_{ovp}\alpha_2(T_2 - T_o) \qquad \text{---------- (Eq. B.5.4)}$$

where:

R_{shell}:	Maximum MPC shell outer radius
R_{ovp}:	Minimum Overpack inner shell inner radius
R_g:	Width of guide vanes on the overpack inner shell
α_1, α_2, α_3:	Coefficients of thermal expansion for MPC shell, overpack inner shell and guide vanes at T_1, T_2 and T_3 respectively
T_1:	Maximum temperature of MPC shell
T_2:	Minimum temperature of overpack inner shell
T_3:	Maximum temperature of guide vanes

The temperatures T_1, T_2 and T_3 are obtained from FLUENT case and data file "DC-HI-STORM-FINEST-36.9kw" listed in Section B.4. The required data for computing θ_1 is provided below:

R_{shell} = 34.25 in [B-19]
R_{ovp} = 36.5 in [B-20]
D_{min} = 69 in [B-20] Minimum spacing between the guides
$R_g = R_{ovp} - D_{min}/2 = 2$ in
$\alpha_1 = 9.42\text{x}10^{-6}\ {}^{o}F^{-1}$ (Table 3.3.1 [B-2])
$\alpha_2 = 5.53\text{x}10^{-6}\ {}^{o}F^{-1}$ (Table 3.3.2 [B-2])
$\alpha_3 = 6.59\text{x}10^{-6}\ {}^{o}F^{-1}$ (Table 3.3.2 [B-2])
$T_1 = 475^{o}F$ (conservatively overstated)
$T_2 = 95^{o}F$ (conservatively understated)
$T_3 = 335^{o}F$ (conservatively overstated)
$T_o = 70^{o}F$

Substituting the above data in Eq. B.5.4, θ_1 is computed as 0.129 in. The radial cold gap between the MPC and overpack inner shell is 0.25 in (calculated as $D_{min}/2 - R_{shell}$).

d) <u>MPC-to-Overpack Axial Growth</u>

The axial growth of the MPC shell residing in the HI-STORM relative to the overpack upon heating from a 70°F reference temperature to storage temperatures is computed as follows:

$$\theta_2 = H_{shell}\alpha_1(T_1 - T_o) - H_{ovp}\alpha_2(T_2 - T_o)) \qquad \text{---------- (Eq. B.5.5)}$$

where:

H_{shell}:	MPC shell height
H_{ovp}:	Overpack cavity length
α_1, α_2:	Coefficients of thermal expansion for MPC shell and overpack inner shell at T_1 and T_2 respectively
T_1:	Average temperature of MPC shell outer surface
T_2:	Average temperature of overpack inner shell inner surface

The temperatures T_1 and T_2 are obtained from FLUENT case and data file "DC-HI-STORM-FINEST-36.9kw" listed in Section B.4. The required data for computing θ_2 is provided below:

H_{shell} = 181.3125 in [B-19]
H_{ovp} = 197.5 in [B-20]
$\alpha_1 = 9.21*10^{-6}\ {}^{o}F^{-1}$ (Table 3.3.1 [B-2])
$\alpha_2 = 5.89*10^{-6}\ {}^{o}F^{-1}$ (Table 3.3.2 [B-2])
$T_1 = 365^{o}F$ (conservatively overstated)
$T_2 = 235^{o}F$ (conservatively understated)
$T_o = 70^{o}F$

Substituting the above data in Eq. B.5.5, θ_2 is computed as 0.301 in. The axial cold gap between the overpack and MPC is 16.1875 in.

The thermal expansion calculation results are summarized in Table B.5.3. All the differential expansions are less than the nominal gap.

B.5.3 MPC-32 Pressure Calculations

In this subsection, cavity pressures within the MPC-32 as a result of heatup from fuel decay heat are computed for the bounding scenario reported in Section B.5.1 (i.e. Scenario 2, finest mesh). The calculations cover the following conditions:

i) Minimum and Maximum MPC helium backfill pressures
ii) Normal long-term storage
iii) Hypothetical rod ruptures

B.5.3.1 MPC-32 Cavity Pressure for Scenario 2

The MPC-32, prior to sealing, is backfilled with helium. The helium backfill must be sufficient to produce an operating pressure (P_o) of 7 atm absolute (102.9 psia) at design basis maximum heat load of 36.9 kW. The required helium backfill pressure is specified as a minimum backfill pressure (P_b) at 70°F reference temperature. P_b is computed from Ideal Gas Law as follows:

$$P_b = \frac{460 + T_b}{460 + T_{cav}} P_o$$

where,

T_b = Reference temperature in °F (21°C (70°F))

T_{cav} = Average MPC cavity temperature at design heat load for normal long-term storage in °F (computed as 257°C (495°F))

Using the above data, the minimum backfill pressure is computed as 42.4 psig. A theoretical upper limit on the helium backfill pressure also exists and is defined by the design pressure (P_d) of the MPC-32 vessel (114.7 psia [B-2]). To compute the upper limit of helium backfill pressure, the operating pressure P_o is assumed to reach the design pressure (P_d) and P_b defined above is computed. The maximum allowable backfill pressure computes as 49.0 psig. To bound the minimum and maximum backfill pressures with a margin, a helium backfill specification is set forth in Table 1.1 of the main report. Having defined the helium backfill specifications in Table 1.1 and based on fission gases release fractions (NUREG 1536 criteria [B-11]), MPC net free volume and initial fill gas pressure, maximum MPC-32 gas pressures with 1% (normal), 10% (off-normal) and 100% (accident condition) rod rupture are conservatively computed assuming:

1) Helium backfill pressure is at its maximum specified value (Table 1.1)
2) Rod fill gas volume based on IFBA fuel [B-14]
3) Design basis maximum heat load (36.9 kW) [B-2]
4) Design ambient temperatures (Table 1.2)

For hypothetical rod rupture accident condition, MPC-32 pressures are conservatively computed assuming:

1) Bounding fuel burnup (70,000 MWD/MTU) [B-14]
2) 100% of rods fill gas and 30% fission gas release from ruptured fuel rods [B-14]. A concomitant effect of rod ruptures is the increased pressure and molecular weight of the cavity gases with enhanced rate of heat dissipation by internal helium convection and lower cavity temperatures. As these effects are substantial under large rod ruptures, the 100% rod rupture accident is evaluated with due credit for increased heat dissipation under increased molecular weight of the cavity gases. Molecular weight used in the analysis is conservatively understated.
3) Lower bound MPC-32 free volume (Appendix D)

4) PWR non-fuel hardware (BPRA control elements and thimble plugs) are also included in the MPC pressure calculations. The presence of non-fuel hardware increases the effective basket conductivity, thus enhancing heat dissipation and lowering fuel temperatures as well as the temperature of the gas filling the space between fuel rods. The gas volume displaced by the mass of non-fuel hardware lowers the cavity free volume. These two effects, namely, temperature lowering and free volume reduction, have opposing influence on the MPC cavity pressure. The first effect lowers gas pressure while the second effect raises it. In the HI-STORM 100SA thermal analysis, the computed temperature field (with non-fuel hardware excluded) has been determined to provide a conservatively bounding temperature field. The MPC cavity free space is computed based on volume displacement with non-fuel hardware included. This approach ensures conservative bounding pressures. The pressure calculations assume all the 32 fuel locations to have BPRAs.

Employing the assumptions listed above, MPC-32 pressures (including helium from BPRAs) are computed in the EXCEL spreadsheet "mpc_pres_R1.xls" listed in Section B.4 and results reported in Table B.5.11. The MPC boundary pressures are below the design pressure limits specified in Chapter 2 of Reference B-2.

B.5.3.2 MPC-32 Cavity Pressure for Scenario 1

At the DC ISFSI, the limiting MPC-32 will be loaded with a uniform decay heat load of 28.74 kW [B-16] and a helium backfill conditions consistent with Diablo Canyon FSAR [2]. Based on the methodology described in sub-section B.5.3.1, the helium backfill for MPC-32 loaded upto 28.74 kW and lower, is specified in Table 1.1.

The MPC-32 pressures (including helium from BPRAs) are computed in the EXCEL spreadsheet "mpc_pres_R1.xls" listed in Section B.4 and results reported in Table B.5.14. No credit for increased molecular weight is considered under 100% rod rupture accident event at the lower

heat load. The MPC boundary pressures are below the design pressure limits specified both in DC ISFSI SAR [2] and Chapter 2 of Reference B-2.

B.5.4 Off-Normal and Accident Events

This section reports the temperature and pressure during the off-normal and accident events defined in the HI-STORM 100 FSAR. It is to be noted that postulation of 100% rods rupture coincident with off-normal and accident events is not required. It was eliminated because the peak fuel cladding temperatures for the accident conditions never exceed the regulatory accident temperature limit, which ensures no significant cladding failures would occur. This is consistent with the latest NRC guidance on fuel cladding in dry storage casks [B-5], which states "In order to assure integrity of the cladding material ... For off-normal and accident conditions, the maximum cladding temperature should not exceed 570°C (1058°F)." The same result is confirmed for all accidents evaluated for the DC ISFSI. Therefore, no coincident 100% rod rupture postulations with an accident are evaluated. This is supported by the HI-STORM 100 CoC, Amendment 5.

To support the evaluation of off-normal and accident events defined in the HI-STORM 100 FSAR (Chapter 4, Section 4.6 [B-2]), the following conditions are analyzed:

(a) Off-Normal Pressure

Scenario 1

This condition is defined as an off-normal ambient temperature (Table 1.2 of main report) co-incident with 10% rods rupture for Scenario 1. The maximum helium backfill specified for Scenario 1 in Table 1.1 is used for the calculations reported in this sub-section. The principal effect of an off-normal ambient temperature is an increase of HI-STORM 100SA system temperatures by the difference (Δ) between the off-normal and normal ambient temperatures (Table 1.2 of main report). The effect of rods rupture has a direct effect on increasing the MPC-32 gas density which enhances MPC-32 thermosiphon cooling. For conservatism, effect of gas density increase is ignored and HI-STORM 100SA temperatures obtained by adding Δ to the baseline solution for normal storage conditions. The increased

MPC-32 pressure is computed in EXCEL ("mpc_pres_R1.xls" computer file listed in Section B.4) and results are reported in Table B.5.14. The result confirms that the MPC off-normal pressure is below the off-normal design pressure [2].

Scenario 2

This event is defined as a combination of (a) maximum helium backfill pressure (Table 1.1), (b) 10% fuel rods rupture, and (c) limiting fuel storage configuration. The principal objective of the analysis is to demonstrate that the MPC off-normal design pressure is not exceeded. The MPC-32 pressure is computed for Scenario 2 in EXCEL ("mpc_pres_R1.xls" computer file listed in Section B.4) and results are reported in Table B.5.11. The result confirms that the MPC off-normal pressure is below the off-normal design pressure limit [B-2].

(b) Off-Normal Ambient Temperature

This condition is defined as an off-normal ambient temperature (Table 1.2 of main report). The consequences of this event are bounded by the analysis for Off-Normal Pressure for Scenario 1. The principal effect of an off-normal ambient temperature is an increase of HI-STORM system temperatures by the difference (Δ) between the off-normal and normal temperatures (Table 1.2 of main report). These temperatures are reported in Table B.5.4. All the MPC and HI-STORM 100SA component temperatures are below their temperature limits.

The increased MPC-32 pressure is computed in EXCEL ("mpc_pres_R1.xls" computer file listed in Section B.4) and results are reported in Table B.5.12. The result confirms that the MPC pressure under off-normal ambient temperature is below the off-normal design pressure (specified in DC ISFSI SAR [2]).

(c) Partial Blockage of Air Inlets

This condition is defined as 50% blockage of all the inlet ducts. The resulting decrease in flow area increases the inlet air flow resistance. The effect of increased flow resistance on fuel temperature is analyzed on FLUENT under baseline operation (normal ambient temperature) and bounding heat load of 36.9 kW (Scenario 2).

The fuel cladding, MPC and HI-STORM 100SA component temperatures obtained from the FLUENT simulations are reported in Table B.5.4. All the reported temperatures are below their temperature limits. It is also to be noted that the temperatures remain not only below the off-normal event limits, but the temperatures for all SFSC components remain below their short-term limits for this event. The MPC-32 pressure is computed in EXCEL and is reported in Table B.5.12. The result is below the off-normal design pressure (specified in DC ISFSI SAR [2])

(d) Fire Accidents

The HI-STORM fire accident is evaluated based on the fire conditions specified in Section 4.6 of Reference B-2. Based on NUREG-1536 [B-11] and 10 CFR 71 guidelines [B-15], the following fire parameters are assumed:

1. The average emissivity coefficient on the overpack outer surfaces is 0.9.
2. The average flame temperature is 1475° F (800° C).
3. The fuel source extends horizontally by 1 m (40 in) beyond the external surface of the cask.
4. A conservative forced convection heat transfer coefficient of 4.5 Btu/(hr$\times$ft$^2\times$° F) is applied to exposed overpack surfaces during the short-duration fire.
5. No solar insolation is applied during the duration of fire. However, solar insolation is applied after the fire extinguishes i.e. during post-fire conditions.

Based on the 189 liters (50 gallon) fuel volume, HI-STORM 100SA overpack outer diameter (3.3655 m (11.04 ft)) and the 1 m fuel ring width, the fuel ring surrounding the overpack covers 13.715 m^2 (147.62 ft^2) and has a depth of 1.38 cm (0.543 in). From this depth and a linear fuel consumption rate of 0.381 cm/min (0.15 in/min), the fire duration is calculated to be 3.62 minutes (217 seconds). The linear fuel consumption rate of 0.381 cm/min (0.15 in/min) is a lowerbound value from Sandia Report [B-13]. Use of a lowerbound linear fuel consumption rate conservatively maximizes the duration of the fire. However, a transient study is conducted for conservative fire duration of 240 seconds.

Since Scenario 2 listed in Section 1.4 of this report results in the most limiting temperature field, it is adopted as the initial condition for fire accident transient evaluation. The results of this evaluation are presented in Table B.5.5. Post-fire evaluations are continued till temperatures of all the components of MPC and overpack reach their maximum temperatures and begin to recede. The post-fire transient analysis results are summarized in Table B.5.5. The results show that the fuel temperature rise is small. All MPC and overpack components' temperatures remain below temperature limits specified in Reference B-2. Consequently, the impact on the MPC internal helium pressure will be small and the value is reported in Table B.5.12.

(e) <u>100% Blockage of Inlet Ducts</u>

This event is defined as a complete blockage of all four bottom inlets. The immediate consequence of a complete blockage of the air inlet ducts is that the normal circulation of air for cooling the MPC-32 is stopped. **[PROPRIETARY**

] As the temperatures of the MPC-32 and its contents rise, the rate of heat rejection will increase correspondingly. Under this condition, the temperatures of the overpack, the MPC-32 and the stored fuel assemblies will rise as a function of time.

This accident condition is a short duration event that will be identified and corrected by scheduled periodic surveillance at the ISFSI site. The worst possible scenario is a complete loss of ventilation air for the period between scheduled surveillances (24 hours). To conservatively evaluate the effect of complete loss of air supply through the bottom inlets, a substantially greater duration blockage (32 hrs) is assumed. The thermal model is same as that constructed for normal storage conditions except for the bottom inlet ducts which are assumed to be impervious to air. Using this blocked duct model, a transient thermal solution of the HI-STORM 100SA System, with the normal storage steady state temperature field as the initial condition, is obtained. The results of the blocked ducts transient analysis are presented in Table B.5.6. The co-incident MPC pressure is also computed and reported in

Table B.5.12. The result is confirmed to be below the accident pressure limit (specified in DC ISFSI SAR [2]).

(f) Extreme Ambient Temperature

This event is defined as a substantially elevated temperature 52°C (125°F) that is postulated to persist for a 3-day period (Table 1.2 of main report). To bound the event the evaluation assumes that the extreme temperature persists for a sufficient duration to reach steady state conditions. Using the baseline condition (steady state conditions, normal ambient temperature 27°C (80°F) and design heat load) the temperatures of the HI-STORM 100SA system are conservatively assumed to rise by the difference between the extreme and normal ambient temperatures 25°C (45°F). The HI-STORM 100SA extreme ambient temperatures computed in this manner are reported in Table B.5.7. The MPC and HI-STORM 100SA temperatures are well below the accident temperature limits.

The co-incident MPC-32 pressure is computed (EXCEL file "mpc_pres_R1.xls" listed in Section B.4) and reported in Table B.5.12. The result is below the accident design pressure limit (specified in DC ISFSI SAR [2]).

(g) Burial Under Debris Accident

At the storage site, no structures are permitted over the casks. Minimum regulatory distances from the storage site to the nearest site boundary precludes close proximity of vegetation. There is no credible mechanism for the HI-STORM 100SA System to become completely buried under debris. However, for conservatism, a complete burial under debris scenario is evaluated.

To demonstrate the inherent safety of the HI-STORM 100SA System, a bounding analysis that considers the debris to act as a perfect insulator is assumed. Under this scenario, the contents of the HI-STORM System will undergo a transient heat up under adiabatic conditions. The minimum available time ($\Delta\tau$) for the fuel cladding to reach the accident limit depends on the following: (i) thermal inertia of the cask, (ii) the cask initial conditions, (iii) the spent nuclear fuel decay heat generation and (iv) margin between the initial cladding

temperature and accident temperature limit. To obtain a lowerbound on $\Delta\tau$ the HI-STORM 100SA thermal inertia (item (i)) is understated, the cask initial temperature (item (ii)) is maximized, maximum permissible decay heat (item (iii)) assumed and cladding temperature margin (item (iv)) understated. A set of conservatively postulated input parameters for items (i) through (iv) are summarized in Table B.5.8. Using these parameters $\Delta\tau$ is computed as follows:

$$\Delta\tau = \frac{m \times c_p \times \Delta T}{Q}$$

where:
$\Delta\tau$ = Allowable burial time (sec)
m = Mass of HI-STORM 100SA System (kg)
c_p = Specific heat capacity (J/kg×°C)
ΔT = Permissible temperature rise (°C)
Q = Decay heat load (W)

Substituting the parameters from Table B.5.8, a substantial allowable burial time 188640 sec (52.4 hrs) is obtained for the design basis decay heat load. The burial under debris accident pressure is reported in Table B.5.12 and is below the accident design pressure limit (specified in DC ISFSI SAR [2]).

B.5.5 HI-STORM in Cask Transfer Facility (CTF)

This condition consists of a loaded HI-STORM overpack that cannot be removed from the CTF [B-10] because of a failure of the equipment that lifts the HI-STORM. Under such a condition, the flow of air to the bottom inlet vents would be restricted. A steady state evaluation for this condition has been performed using the 3-D FLUENT CFD model for DC ISFSI heat load i.e. Scenario 1 listed in Section 1.4. For the evaluation of the loaded HI-STORM in the CTF, the diameter of the hypothetical reflecting cylinder that surrounds the cask matches the CTF cylinder inner diameter. An air volume up to a height of 5 feet is modeled above the HI-STORM System. A quarter symmetric 3D model of a HI-STORM placed in the CTF is shown in Figure B.5.2. The results of the analysis of HI-STORM placed in the CTF are reported in Table B.5.9. The fuel cladding temperature and other MPC and overpack temperatures are below their respective short-

term temperature limits. Therefore, the HI-STORM can be loaded inside the CTF for an indefinite time for the Diablo Canyon design basis maximum heat load of up to 28.74 kW.

The co-incident MPC-32 pressure is computed (EXCEL file "mpc_pres_R1.xls" listed in Section B.4) and reported in Table B.5.9. The result is below the normal design pressure limit (specified in DC ISFSI SAR [2]).

The finest mesh for the HI-STORM internal, discussed in Sub-section B.5.1.2, was used for the evaluation of the condition of HI-STORM 100SA system placed in the CTF and results reported in Table B.5.9. The airflow outside the HI-STORM system is modeled as turbulent flow using k-ω turbulence model to incorporate the effect of air turbulence on the systems thermal performance. This is in accordance with the turbulence modeling methodology approved by the USNRC in the HI-STORM 100 docket [B-2]. For the k-ω turbulence model, y^+ should be less than 4 or 5 to ensure an adequate level of mesh to resolve the viscosity affected region near the wall [B-3]. **[PROPRIETARY**

]. However, to provide an additional assurance on the thermal analysis results for the condition of HI-STORM 100SA system placed in the CTF, a grid sensitivity study is performed. Since the airflow between the CTF and HI-STORM system is critical to the thermal performance of the system, the mesh in this region is modified. Two additional meshes are constructed – one coarser and another mesh finer than that presented in Table B.5.9. A brief summary of the different sets of grids evaluated is provided below:

Mesh	Number of Radial Cells	y^+	PCT (°C)	Permissible Limit (°C)
Mesh 1 - Coarse				400
Mesh 2 - Fine[Note 1]				400
Mesh 3 - Finest				400

Note 1: The results reported in Table B.5.9 are based on the fine mesh.

Note 2: The y^+ reported in the third column above is a measure of grid adequacy provided by the FLUENT code. Values of y^+~1 indicate an adequate level of mesh refinement is reached to resolve the viscosity affected region near the wall.

As can be seen from the above table, the thermal solution presented in Table B.5.9 is on a converged mesh. To provide further assurance of convergence, the sensitivity results are evaluated in accordance with the ASME Journal procedure for control of numerical accuracy [B-21]. Towards this end the Grid Convergence Index (GCI), which is a measure of the solution uncertainty, is computed in Appendix F of this report. The GCI for the fine grid **[PROPRIETARY**] computes to be **[PROPRIETARY]** which provides further assurance of grid convergence. Therefore, the thermal analysis of the HI-STORM 100SA System in the CTF is reasonably accurate and the safety of the system during this condition is not challenged.

B.5.6 **[PROPRIETARY**

]

B.5.7 Summary and Conclusions

The results of the evaluations described in the previous sub-sections indicate that the thermal-hydraulic performance of the HI-STORM 100SA System components continues to satisfy all applicable component temperature and MPC internal pressure limits at the existing maximum cask heat load of 28.74 kW. It can therefore be concluded that the HI-STORM 100SA System thermal design is in compliance with 10CFR 72 requirements for Diablo Canyon specific heat load.

B.6 REFERENCES

[B-1] "Pressure Loss Characteristics for In-Cell Flow of Helium in PWR and BWR MPCs", Holtec Report HI-2043285, Revision 7.

[B-2] "Final Safety Analysis Report for the HI-STORM 100 Cask System", Holtec Report HI-2002444, Revision 7.

[B-3] FLUENT Computational Fluid Dynamics Software, Version 6.3.26 (Fluent Inc., 10 Cavendish Court, Lebanon, NH – 03766).

[B-4] "Scoping Design Analyses for Optimized Shipping Casks Containing 1-, 2-, 3-, 5-, 7-, or 10- Year Old PWR Spent Fuel", Oak Ridge National Lab, 1983.

[B-5] "Cladding Considerations for the Transportation and Storage of Spent Fuel", Interim Staff Guidance – 11, U.S. Nuclear Regulatory Commission, Revision 3.

[B-6] "Topical Report on the Thermal Analysis Model for the HI-STAR/HI-STORM Systems and Benchmarking with Full-Size Test Data", Holtec Report HI-992252, Revision 1.

[B-7] "Diablo Canyon MPC-32 Fuel Basket Assembly", Holtec Drawing 4458, Revision 7.

[B-8] "Diablo Canyon Enclosure Vessel", Holtec Drawing 4459, Revision 9.

[B-9] "HI STORM 100SA Assembly", Holtec Drawing 4461, Revision 14.

[B-10] "Underground Cask Transfer Facility", Holtec Drawing 4431, Revision 11.

[B-11] NUREG-1536, "Standard Review Plan for Dry Cask Storage Systems," U.S. Nuclear Regulatory Commission, January 1997.

[B-12] "Nuclear Systems Materials Handbook", Volume 1, Oak Ridge National Laboratory, TID 26666, Volume 1.

[B-13] "Thermal Measurements in a Series of Large Pool Fires", Gregory, J.J., et. al., SAND85-1096, Sandia National Laboratories, Albuquerque, NM, (August 1987).

[B-14] "Evaluation of IFBA Fuel Storage in the HI-STORM System", DS-265, Revision 1.

[B-15] United States Code of Federal Regulations, Title 10, Part 71.

[B-16] HI-STORM 100 CoC, Amendments 1 to 4, USNRC Docket No. 72-1014.

[B-17] HI-STORM 100 CoC, Amendment 5, USNRC Docket No. 72-1014.

[B-18] "Diablo Canyon MPC-32 Fuel Basket", Holtec Drawing 4407, Revision 16.

[B-19] "Diablo Canyon MPC-32 Enclosure Vessel", Holtec Drawing 4408, Revision 19.

[B-20] "HI-STORM 100SA", Holtec Drawing 4425, Revision 16.

[B-21] "Procedure for Estimating and Reporting of Uncertainty due to Discretization in CFD Applications", I.B. Celik, U. Ghia, P.J. Roache and C.J. Freitas (Journal of Fluids Engineering Editorial Policy on the Control of Numerical Accuracy).

Table B.5.1

DELETED

Table B.5.2

BOUNDING HI-STORM 100SA NORMAL STORAGE MPC AND OVERPACK TEMPERATURES (SCENARIO 2)[2]

Component	Temperature for Baseline Mesh °C (°F)	Temperature for Finest Mesh °C (°F)	Temperature Change Due to Mesh Refinement °C (°F)	Temperature Limit °C (°F)
Fuel Cladding				400 (752)
MPC Basket				385 (725)
Basket Periphery				385 (725)
MPC Shell				260 (500)
Overpack Inner Shell				177 (350)
Overpack Outer Shell				177 (350)
Lid Bottom Plate				232 (450)
Lid Top Plate				232 (450)
Overpack Body Concrete[3]				149 (300)
Overpack Lid Concrete[3]				149 (300)
Average Air Outlet				-
MPC Cavity Average				-

2 The temperatures reported in this table for the limiting storage Scenario 2 are below the design temperatures specified in Table 2.2.3 of Reference B-2.

3 Maximum section average temperature is reported.

Table B.5.3

HI-STORM 100SA DIFFERENTIAL THERMAL EXPANSIONS DURING LONG TERM NORMAL STORAGE

Gap Description	**Cold Gap (U), (inch)**	**Differential Expansion (V), (inch)**	**Is Free Expansion Criteria Satisfied (i.e. U > V)**
Fuel Basket-to-MPC Radial Gap	0.08	0.0655	Yes
Fuel Basket-to-MPC Axial Gap	0.9375	0.256	Yes
MPC-to-Overpack Radial Gap	0.25	0.129	Yes
MPC-to-Overpack Axial Gap	16.1875	0.301	Yes

Table B.5.4

OFF-NORMAL CONDITION MAXIMUM HI-STORM 100SA TEMPERATURES

Component	Off-Normal Ambient Temperature[4] °C (°F)	Partial Inlet Ducts Blockage[5] °C (°F)	Off-Normal Limit[Note 1] °C (°F)
Fuel Cladding			570 (1058)
MPC Basket			510 (950)
Basket Periphery			510 (950)
MPC Shell			413 (775)
Overpack Inner Shell			204 (400)
Overpack Outer Shell			316 (600)
Lid Bottom Plate			204 (400)
Lid Top Plate			288 (550)
Overpack Body Concrete[6]			177 (350)
Overpack Lid Concrete[6]			177 (350)

Note 1: The off-normal temperature limits of all the components satisfy the more conservative Diablo Canyon specific off-normal temperature limits obtained from [2] in Section 8.0 of this report and therefore the Diablo Canyon limits are listed here.

4 Obtained by adding the difference between off-normal ambient and normal temperature difference (11.1°C (20°F)) to normal condition temperatures (finest mesh) reported in Table B.5.2.

5 The temperatures tabulated herein include the temperature adder reported in Table B.5.2 for all the components.

6 Maximum section average temperature is reported.

Table B.5.5

HI-STORM 100SA FIRE AND POST-FIRE ACCIDENT ANALYSIS RESULTS[7]

Component	Initial Condition °C (°F)	End of Fire Condition °C (°F)	Post-Fire Cooldown °C (°F)	Time to Reach Maximum Temperature[8]	Temperature Limit °C (°F)
Fuel Cladding				31 hr	570 (1058)
MPC Basket				31 hr	510 (950)
Basket Periphery				31 hr	510 (950)
MPC Shell				240 sec	413 (775)
Overpack Inner Shell				240 sec	427 (800)
Overpack Outer Shell				240 sec	427 (800)
Overpack Body Concrete[9]				1 hr	177 (350)
Overpack Lid Concrete[9]				0.5 hr	177 (350)

7 All the temperatures tabulated herein include the temperature adder reported in Table B.5.2 for all the components.

8 Time starts after the beginning of fire.

9 Maximum section average temperature is reported.

Table B.5.6

RESULTS OF HI-STORM 100SA 32-HOURS BLOCKED INLET DUCTS THERMAL ANALYSIS[10]

Component	**Initial Condition °C (°F)**	**Final Condition °C (°F)**	**Accident Temperature Limit °C (°F)**
Fuel Cladding			570 (1058)
MPC Basket			510 (950)
Basket Periphery			510 (950)
MPC Shell			413 (775)
Overpack Inner Shell			427 (800)
Overpack Outer Shell			427 (800)
Lid Bottom Plate			427 (800)
Lid Top Plate			427 (800)
Overpack Body Concrete[11]			177 (350)
Overpack Lid Concrete[11]			177 (350)

10 All the temperatures tabulated herein include the temperature adder reported in Table B.5.2 for all the components.

11 Maximum section average temperature is reported.

Table B.5.7

EXTREME ENVIRONMENTAL CONDITION MAXIMUM HI-STORM 100SA TEMPERATURES

Component	Temperature[12] °C (°F)	Accident Limit °C (°F)
Fuel Cladding		570 (1058)
MPC Basket		510 (950)
Basket Periphery		510 (950)
MPC Shell		413 (775)
Overpack Inner Shell		427 (800)
Overpack Outer Shell		427 (800)
Lid Bottom Plate		427 (800)
Lid Top Plate		427 (800)
Overpack Body Concrete[13]		177 (350)
Overpack Lid Concrete[13]		177 (350)

12 Obtained by adding the difference between extreme ambient and normal temperature difference (25°C (45°F)) to normal condition temperatures (finest mesh) reported in Table B.5.2.

13 Maximum section average temperature is reported.

Table B.5.8

SUMMARY OF INPUTS FOR BURIAL UNDER DEBRIS ANALYSIS

Thermal Inertia Inputs[14]: M (Lowerbound HI-STORM 100SA Weight) Cp (Carbon steel heat capacity)[15]	 99790 kg (220,000 lb) 419 J/kg-K (0.1 Btu/lbm-°F)
Cask initial temperature (clad max. temperature assumed)	
Q (Decay heat)	36.9 kW (0.126 MBtu/hr)
ΔT (clad temperature margin)[16]	

14 Thermal inertia of fuel, basket and MPC is conservatively neglected.

15 Used carbon steel's specific heat since it has the lowest heat capacity among the principal materials employed in MPC and overpack construction (carbon steel, stainless steel and concrete).

16 The clad temperature margin is conservatively understated in this table.

Table B.5.9

BOUNDING HI-STORM 100SA NORMAL STORAGE MPC AND OVERPACK TEMPERATURES IN THE CASK TRANSFER FACILITY (CTF) FOR SCENARIO 1

Component	**Scenario 1 Temperature °C (°F)**	**Temperature Limit °C (°F)**
Fuel Cladding		Moderate Burnup Fuel: 570 (1058) High Burnup Fuel: 400 (752)
MPC Basket		510 (950)
Basket Periphery		510 (950)
MPC Shell		413 (775)
Overpack Inner Shell		427 (800)
Overpack Outer Shell		427 (800)
Lid Bottom Plate		427 (800)
Lid Top Plate		427 (800)
Overpack Body Concrete[17]		177 (350)
Overpack Lid Concrete[17]		177 (350)
Average Air Outlet		-
Pressure kPa (psig)		
MPC Cavity		689.3 (100)

[17] Maximum section average temperature is reported.

Table B.5.10

[PROPRIETARY]

Component			**Temperature Limit °C (°F)**
Fuel Cladding	390 (734)	387 (729)	400 (752)
MPC Basket[Note 1]	386 (727)	384 (723)	385 (725)
Basket Periphery	322 (612)	320 (608)	385 (725)
MPC Shell	241 (466)	245 (473)	260 (500)
Overpack Inner Shell	164 (327)	164 (327)	177 (350)
Overpack Outer Shell	74 (165)	73 (163)	177 (350)
Lid Bottom Plate	138 (280)	124 (255)	232 (450)
Lid Top Plate	88 (190)	85 (185)	232 (450)
Overpack Body Concrete[20]	106 (223)	105 (221)	149 (300)
Overpack Lid Concrete[20]	111 (232)	103 (217)	149 (300)
Average Air Outlet	94 (201)	93 (199)	-
[PROPRIETARY]			

18 All the temperatures tabulated herein include the temperature adder reported in Table B.5.2 for all the components.

19 These results are reported for the finest mesh in Table B.5.2.

20 Maximum section average temperature is reported.

Table B.5.11

SUMMARY OF MPC CONFINEMENT BOUNDARY PRESSURES[21] FOR SCENARIO 2

Condition	**Gauge Pressure kPa (psig)[22]**	**Pressure Limit[Note 1] kPa (psig)**	**MPC Cavity Average Temperature °C (°F)**
Maximum Initial backfill at 21.1°C (70°F) Normal condition (no rods rupture) Normal condition (1% rods ruptured)	313.6 (45.5) 645.9 (93.7) 654.1 (94.9)	- 689.3 (100) 689.3 (100)	257 (495)
Off-normal (10% rods ruptured)	723.1 (104.9)	758.2 (110)	
Accident (100% rods ruptured)	1340.7 (194.5)	1378.6 (200)	230 (446)
Note 1: The cavity pressure for Scenario 2 must satisfy the pressure limits specified in [B-2].			

21 Per NUREG-1536, pressure analyses with postulated rods rupture is performed assuming release of 100% of ruptured fuel rods fill gas and 30% of the significant radioactive gaseous fission products.

22 The pressures reported in this table are computed assuming the helium backfill pressure is at its upper bound limit (Table 1.1 of main report).

Table B.5.12

OFF-NORMAL AND ACCIDENT CONDITION MAXIMUM MPC PRESSURES
(SCENARIO 2)

Condition	MPC Cavity Average Temperature °C (°F)	Gauge Pressure kPa (psig)	Pressure Limit[Note1] kPa (psig)
Off-Normal Conditions			
Off-Normal Ambient[23]	268 (514)	661.7 (96.0)	689.3 (100)
Partial Blockage of Inlet Ducts[24]	261 (502)	652.1 (94.6)	689.3 (100)
Accident Conditions			
Extreme Ambient Temperature	282 (540)	681.0 (98.8)	1378.6 (200)
100% Blockage of Air Inlets @ 32 Hr[24]	348 (658)	774.8 (112.4)	1378.6 (200)
HI-STORM Fire Accident[24]	259 (498)	648.6 (94.1)	1378.6 (200)
Burial Under Debris @ Maximum Allowable Burial Time	424 (795)	880.9 (127.8)	1378.6 (200)

Note 1: Since all the off-normal and accident scenarios mentioned in this table satisfy the more conservative Diablo Canyon specific pressure limits [2] in Section 8.0 of this report, the Diablo Canyon limits are listed here.

23 The off-normal pressure event defined in Part (a) of Section B.5.4 for Scenario 2 bounds the pressure during the off-normal ambient temperature event (Part (b) in Section B.5.4).

24 MPC pressure is calculated based on the cavity average temperature that include the temperature adder reported in Table B.5.2.

Table B.5.13

HI-STORM 100SA PEAK CLADDING TEMPERATURES FOR DIFFERENT HEAT LOADS[25]

Component	Temperature for Scenario 2[Note 1] °C (°F)	Temperature Limit for Scenario 2[Note 2] °C (°F)	Temperature for Scenario 1[Note 1] °C (°F)	Temperature Limit for Scenario 1[Note 3] °C (°F)
Fuel Cladding		400 (752)		400 (752)
MPC Basket		385 (725)		385 (725)
Basket Periphery		385 (725)		385 (725)
MPC Shell		260 (500)		232 (450)
Overpack Inner Shell		177 (350)		177 (350)
Overpack Outer Shell		177 (350)		177 (350)
Lid Bottom Plate		232 (450)		177 (350)
Lid Top Plate		232 (450)		177 (350)
Overpack Body Concrete[26]		149 (300)		149 (300)
Overpack Lid Concrete[26]		149 (300)		149 (300)
Average Air Outlet		-		-

Note 1: These scenarios are defined in Section 1.4 of this report.

Note 2: The temperature limits of all the components are obtained from [B-2].

Note 3: The temperature limits of all the components except concrete are obtained from [2] in Section 8.0 of this report.

25 The peak cladding temperatures presented in the table are based on the finest mesh.

26 Maximum section average temperature is reported.

Table B.5.14

SUMMARY OF MPC CONFINEMENT BOUNDARY PRESSURES FOR SCENARIO 1[Note 1]

Condition	**Gauge Pressure kPa (psig)**	**Pressure Limit kPa (psig)**	**MPC Cavity Average Temperature °C (°F)**
Maximum Initial backfill at 21.1°C (70°F)	229.5 (33.3)	-	228 (442)
Normal condition (no rods rupture)	461.8 (67.0)	689.3 (100)	
Normal condition (1% rods ruptured)	469.4 (68.1)	689.3 (100)	
Off-normal (10% rods ruptured)	549.4 (79.7)	689.3 (100)	
Accident (100% rods ruptured)	1191.8 (172.9)	1378.6 (200)	

Note 1: The pressures presented in this table are for Scenario 1 listed in Section 1.4 at helium backfill specifications reported in Table 1.1 to maintain a MPC cavity pressure of at least 5 atm absolute.

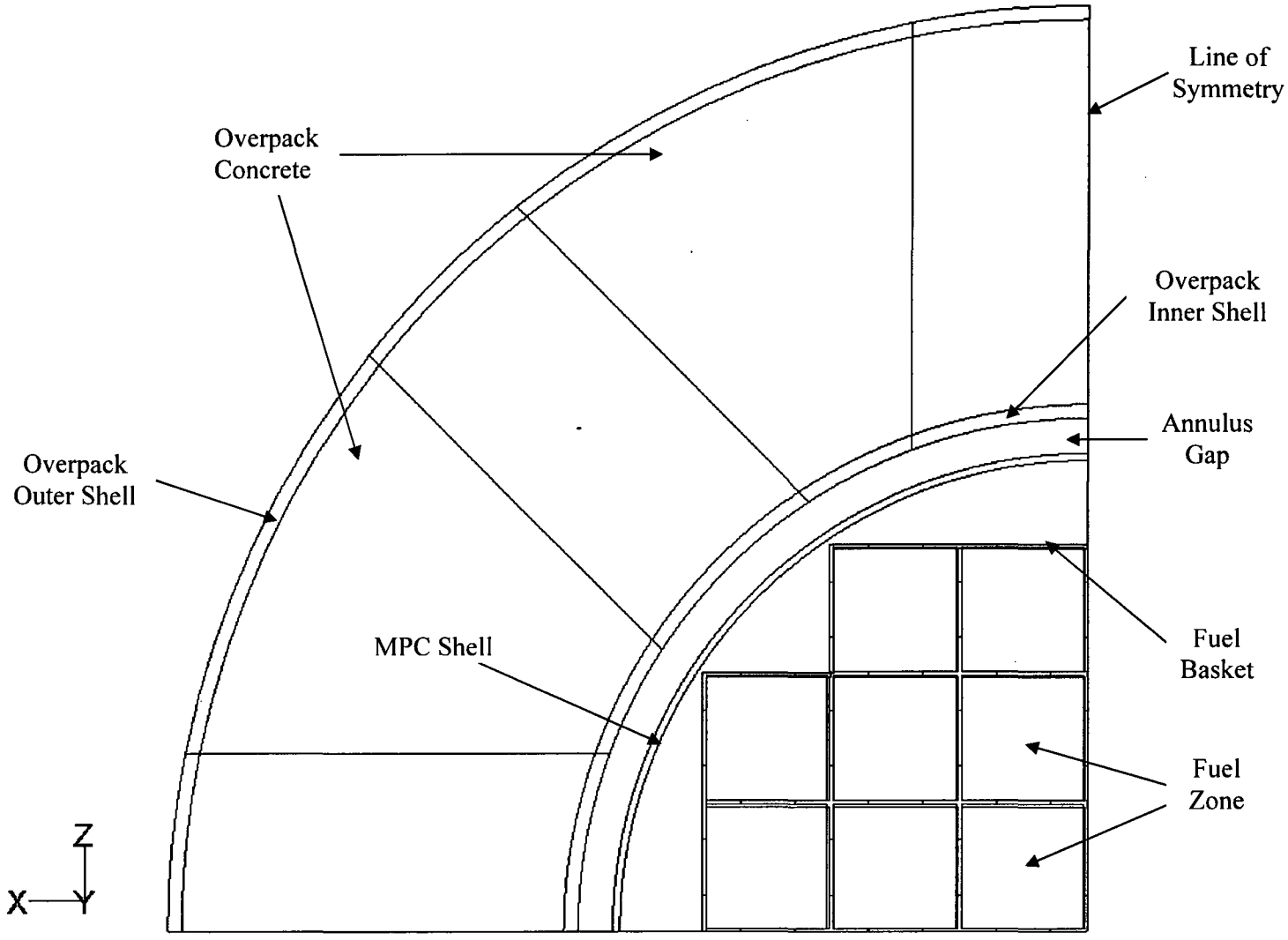

Figure B.2.1: Planar View of HI-STORM 100SA MPC- 32 Quarter Symmetric 3-D Model

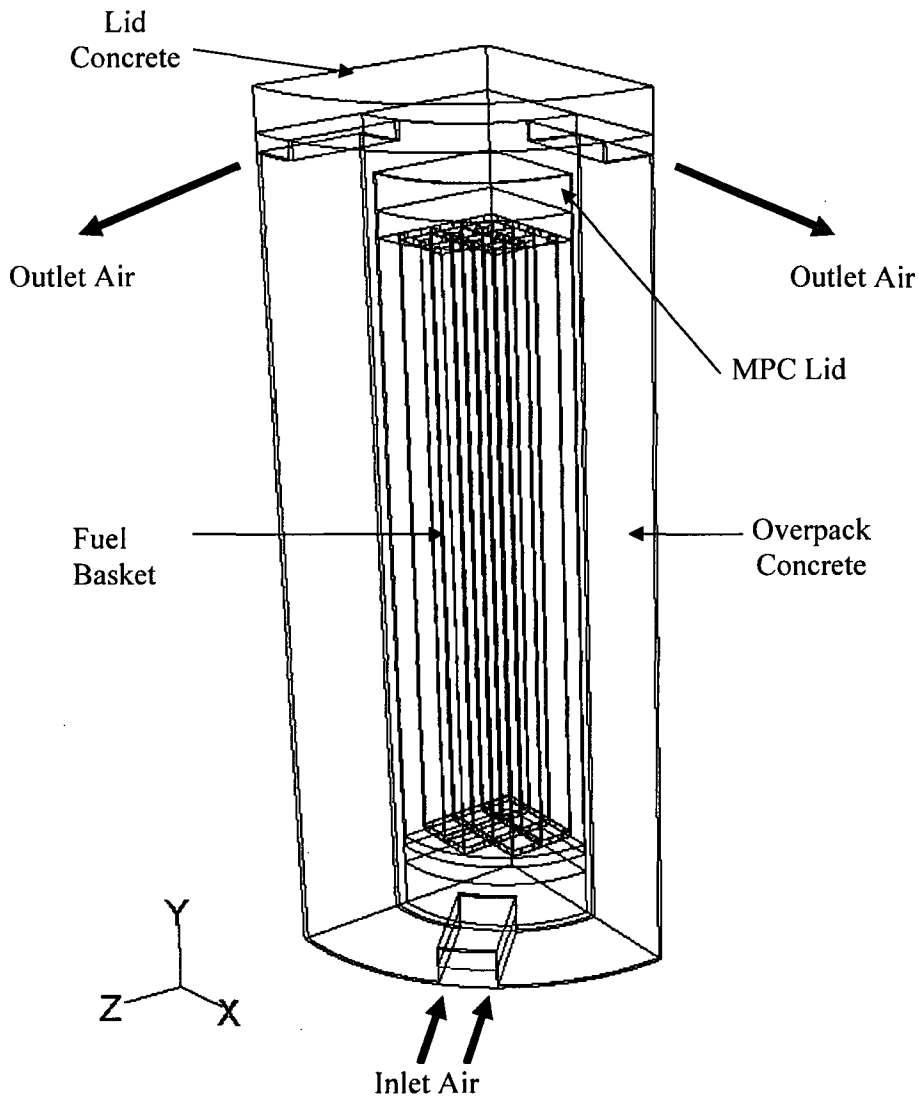

Figure B.2.2: HI-STORM 100SA MPC- 32 Quarter Symmetric 3-D Model

[PROPRIETARY]

Figure B.5.1: Basket Geometry

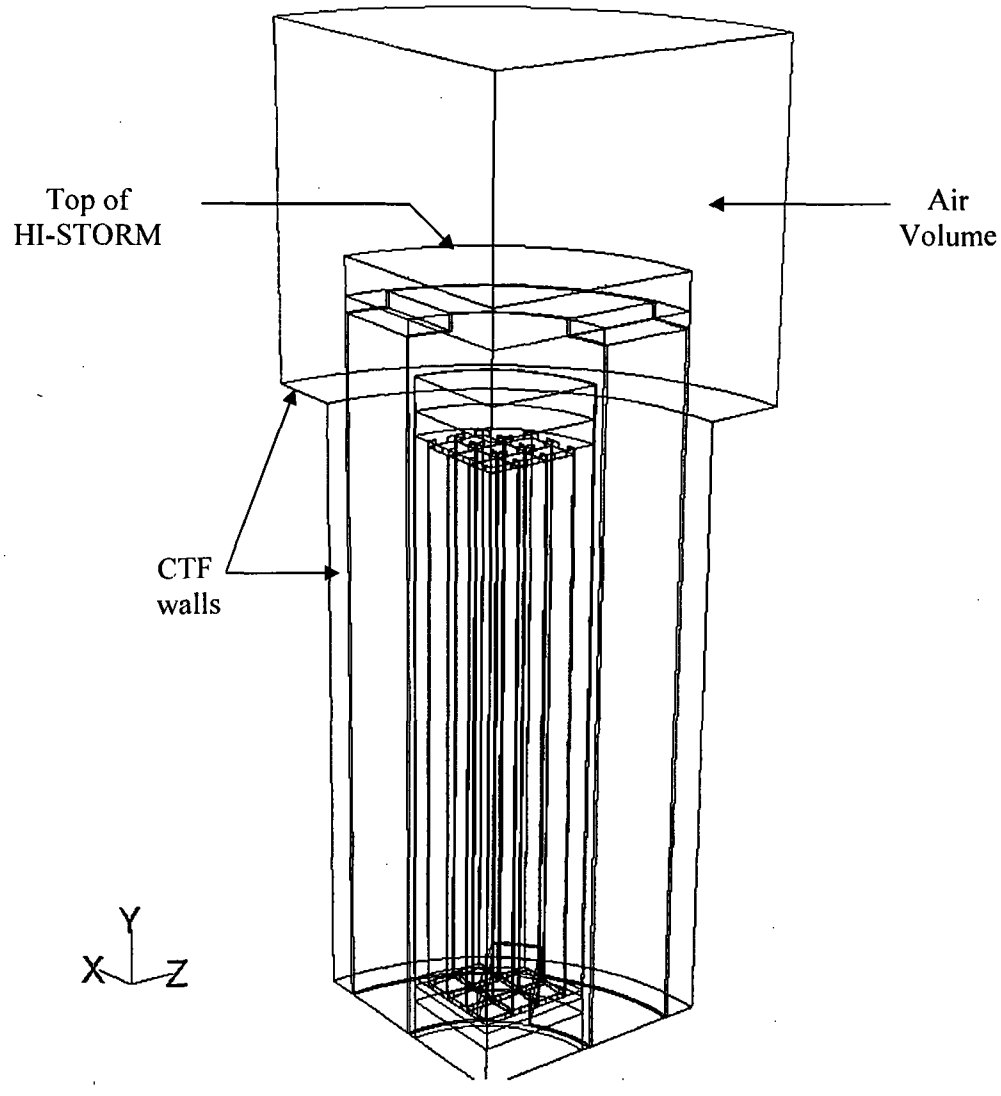

Figure B.5.2: Quarter Symmetric 3-D Model of HI-STORM 100SA Placed in CTF

Appendix C

Thermal Analysis of MPC-32 in HI-TRAC
(Total 19 Pages)

C.1 INTRODUCTION

Calculations to evaluate the temperature and pressure fields in the HI-TRAC loaded MPC-32 when the HI-TRAC is in a vertical (upright) orientation are presented in this appendix. For a bounding evaluation, the limiting fuel storage configuration, i.e. Scenario 2 in Section 1.4, is analyzed. Conditions evaluated include normal on-site transfer, water loss accident condition, fire accident and tornado missile impact.

C.2 METHODOLOGY AND ASSUMPTIONS

The calculations to determine the temperature fields during normal on-site transfer and water loss accident conditions are performed using 3-D Computational Fluid Dynamics (CFD) models. The steps performed for each evaluated condition are as follows:

1. The CFD model of the MPC and HI-TRAC is generated using a pre-processor of FLUENT [C-2] program. To ensure an adequate representation of the features of the fuel and basket within the MPC, MPC-32 and HI-TRAC Overpack, a 3-D quarter symmetric model is constructed.
2. Material thermal-hydraulic properties are applied to the model.
3. Loads and boundary conditions are applied to the model, and steady-state thermal solutions are obtained.

Such a methodology has been adopted in recent application submitted to the USNRC, i.e. HI-STORM FW, Docket No 72-1032. The 3-D models implemented to analyze the HI-TRAC have the following key attributes:

1. The MPC portion of the model contains a porous medium to represent the fuel, the top and bottom plenum, and a fluid (helium) zone in the basket-to-shell downcomer region.
2. Radiation heat transfer between the periphery of the fuel basket and the inner surface of the MPC shell is included **[PROPRIETARY]**.
3. In the radial direction, the HI-TRAC portion of the model explicitly contains five layered solid zones that represent the inner shell, the radial lead shield, the outer shell, the water jacket and the enclosure shell.

4. In the axial direction, the pool lid steel and lead layers are explicitly modeled below the MPC, and the top lid and associated air space are explicitly modeled above the MPC.

There are several features of the CFD models that differ from the equipment designs. These differences are modeling simplifications that introduce small conservatisms in the thermal analysis. The following differences exist:

1. A small portion of the HI-TRAC top flange is not modeled as solid carbon steel ring. Instead, the inner and outer shells and the intermediate radial lead are extended to occupy this small portion of flange space. This results in carbon steel being replaced with lower conductivity lead and is, therefore, conservative.

2. The circular hole in the HI-TRAC lid is modeled as a rectangular opening. The modeled opening area is lower than the actual area, therefore conservatively reduces the convective heat transfer from the top of the MPC.

3. The outer diameter of HI-TRAC lid is modeled equal to the outer diameter of the outer shell. This results in an area of the top lid that is normally exposed directly to the ambient being occupied with additional material through which any heat might flow and is, therefore, conservative.

4. The outer diameter of lead shield in the pool lid is modeled to align with the outer diameter of radial lead shield. This results in carbon steel being replaced with lower conductivity lead and is, therefore, conservative.

5. The bottom flange extension outside the enclosure shell envelope is not modeled. This simplification conservatively ignores bottom fin cooling. Also the height of bottom flange is modeled as 2.5" instead of 2". This results in a small portion of lower conductivity lead being replaced by carbon steel. Considering that there is no significant heat transfer at the bottom of HI-TRAC, this will not affect the thermal performance significantly.

6. Natural convection of water or air inside the water jacket is conservatively neglected.

7. A vertical wall is located near the HI-TRAC overpack when MPC is loaded in the HI-TRAC. The closest distance between the vertical wall and HI-TRAC outer surface is 25 inch

[C-8], which is significantly larger than the boundary layer thickness due to natural convection. There is no other obstruction that may block the air flow to the HI-TRAC. **[PROPRIETARY** **]**

8. **[PROPRIETARY**

]

9. The most severe environment factor for short-term operation -ambient temperature 100°F and 10CFR71 insolation level-were coincidentally imposed on the system.

10. **[PROPRIETARY**

]

[PROPRIETARY

]

C.3 INPUT DATA

[PROPRIETARY

]

Geometric data for the fuel basket and MPC are taken from the drawings [C-4] and [C-5]. The fuel basket flow resistance inputs are taken from the Holtec topical report on hydraulic resistance [C-3].

Geometric data for the HI-TRAC 125D, subject to the modeling differences listed in section C.2, are taken from the HI-TRAC drawing [C-6].

The thermal properties of individual component material and effective fuel and basket properties are referenced from HI-STORM FSAR [C-1].

A helium absolute pressure of 7 atm is conservatively used for MPC internal convection heat transfer. **[PROPRIETARY**

] A

solar absorptivity coefficient of 1.0 is applied to all exposed overpack surfaces.

C.4 COMPUTER PROGRAM AND FILES

For the normal conditions of on-site transfer, the HI-TRAC is analyzed for the limiting scenario (Scenario 2 in Section 1.4). For the accident condition (i.e., water jacket filled with air instead of water), the model is evaluated at the design-basis decay heat load but with air instead of water inside the water jacket.

The computer code FLUENT Version 6.3.26 is used in these thermal calculations. The list of input and output files is presented below:

G:\Projects\1073\REPORTS\Thermal Reports\HI-TRAC\gambit

March 10, 2010, 10:24:56 AM	188,743,680 bytes	DC-HI-TRAC.S.dbs
March 10, 2010, 10:26:51 AM	88,788,445 bytes	DC-HI-TRAC.S.msh

G:\Projects\1073\REPORTS\Thermal Reports\HI-TRAC\fluent

Normal On-site Transfer:

May 19, 2010, 3:38:53 PM	52,963,873 bytes	DC-HI-TRAC.SW-X=0.5.cas
May 19, 2010, 3:39:40 PM	966,018,915 bytes	DC-HI-TRAC.SW-X=0.5.dat
March 04, 2010, 6:05:33 PM	2,407 bytes	udf-diablo-x=0.5.c

Water Jacket Loss Accident:

May 19, 2010, 3:15:18 PM	52,964,452 bytes	DC-HI-TRAC.SA-X=0.5.cas
May 19, 2010, 3:16:08 PM	966,018,627 bytes	DC-HI-TRAC.SA-X=0.5.dat

Heat Load Q=28.74 kW:

June 18, 2010, 8:49:40 AM	52,963,854 bytes	DC-HI-TRAC-water-28.74kw.cas

June 18, 2010, 8:50:19 AM 966,059,839 bytes DC-HI-TRAC-water-28.74kw.dat

G:\Projects\1073\REPORTS\Thermal Reports\HI-TRAC\

May 18, 2010, 1:53:47 PM 61,195 bytes k-airgap.xmcd

C.5 RESULTS AND CONCLUSIONS

C.5.1 Normal and Water Loss Accident On-site Transfer Temperatures (Scenario 2)

[PROPRIETARY

]

The HI-TRAC was evaluated for the limiting Scenario 2 decay heat load distribution (see Section 1.4). The results of these FLUENT CFD analyses for on-site transfer conditions are presented for two conditions: (i) Water filled jacket (normal condition) and (ii) Complete loss of water (accident condition). The results are post-processed interactively with the FLUENT program. Discrete numeric results are presented in Tables C.1 and C.2. The results show that the peak fuel cladding temperature during normal on-site transfer conditions is below its temperature limit for moderate burnup fuel but exceeds the allowable limit for high-burnup fuel. A Supplemental Cooling System (SCS) will be required to be used to maintain the maximum cladding temperature for high burnup fuel below the 400°C temperature limit for an MPC that contains one or more high burnup fuel assemblies. The SCS is discussed in Section C.5.7 of this appendix. All the MPC & HI-TRAC overpack component temperatures **[PROPRIETARY** **]** are below their respective temperature limits for normal on-site transfer conditions. **[PROPRIETARY**

] Table C.2 shows that the peak fuel cladding temperatures for water loss accident is below its temperature limit. All the MPC & HI-TRAC overpack component temperatures are also below their respective temperature limits.

C.5.2 Thermal Evaluations supporting DC ISFSI License (Scenario 1)*

This evaluation was performed to support the Diablo Canyon ISFSI license that loads upto a uniform heat of 28.74 kW. Normal on-site transfer of an MPC-32 placed in the HI-TRAC is evaluated in this sub-section. The MPC placed in the HI-TRAC is evaluated for Scenario 1 listed in Section 1.4 of this report. The operating pressure inside the MPC is 5 atmospheres absolute. This heat load and operating pressure are also based on HI-STORM 100 CoC, Amendments 1 to 4 [C-9]. The peak cladding temperature result of this evaluation is tabulated in Table C.6 and is bounded by the Scenario 2 results presented in Table C.1. Therefore, all the off-normal and accident evaluations of the HI-TRAC presented in this appendix are performed for the limiting (Scenario 2 in Section 1.4) scenario.

C.5.3 Fire Accident On-site Transfer Temperatures

The purpose of this calculation is to determine the duration and effects of an assumed 50-gallon flammable liquid fuel fire on the HI-TRAC transfer cask. The duration of the fire is calculated based on the fuel volume and fuel consumption rate. The thermal inertia of the loaded HI-TRAC is determined based on component weights and specific heat capacities. The heat input from the fire and SNF decay is determined, and a bounding temperature rise of the HI-TRAC components is determined assuming an adiabatic heatup with uniform heat generation. **[PROPRIETARY**

]

The calculations are presented in Appendix E of this report. The calculation shows that the maximum temperature rises by 9°C (17°F). The fuel cladding and MPC component temperatures are

---

* See Section 1.4 for Scenario 1.

tabulated in Table C.3. The results show that fuel cladding and all component temperatures are below than their accident temperature limits.

C.5.4 Tornado Missile Impact (Accident)

During a tornado, it is possible for a tornado-driven missile to breach the water jacket on the HI-TRAC transfer cask. From a thermal-hydraulic performance perspective, this is identical to the water jacket loss accident condition evaluated in Subsection C.5.1.

C.5.5 MPC Cavity Pressure

The MPC-32, prior to sealing, is backfilled with helium. The helium backfill pressure specification for MPC-32 is reported in Table 1.1. For normal on-site transfer and accident conditions, the MPC-32 pressures while placed inside the HI-TRAC are computed by using Ideal Gas Law in an EXCEL spreadsheet listed in Section B.4, and results are tabulated in Table C.4 for Scenario 2 (limiting heat load).

At the DC ISFSI, the limiting MPC-32 will be loaded with a uniform decay heat load of 28.74 kW (Scenario 1) and a helium backfill conditions consistent with Diablo Canyon FSAR [2]. The MPC-32 pressures are computed in the EXCEL spreadsheet "mpc_pres_R1.xls" listed in Section B.4 and results reported in Table C.7 for this scenario. The MPC boundary pressures are below the design pressure limits specified both in DC ISFSI SAR [2] and Chapter 2 of Reference C-1.

C.5.6 Thermal Expansion Computations

In this subsection, the radial thermal expansion of MPC-to-HI-TRAC is computed to justify the calculation of the effective thermal conductivities of air in the annular gap between the MPC and the HI-TRAC inner shell, presented in section C.5.1.

The radial growth of the MPC shell relative to the HI-TRAC inner shell (δ) upon heating from a 70°F reference temperature to operation temperatures is computed as follows:

$$\delta = R_1\alpha_1[T_1 - T_o] - R_2\alpha_2[T_2 - T_o] \qquad \text{(Eq. C.5.2)}$$

Where:

R_1: MPC shell outer radius

R_2: HI-TRAC inner shell inner radius

T_1: MPC shell average temperature during normal on-site transfer condition

T_2: HI-TRAC inner shell average temperature during normal on-site transfer condition

α_1: Coefficient of thermal expansion for MPC shell T_1 for Alloy-X

α_2: Coefficient of thermal expansion for HI-TRAC inner shell at T_2 for Carbon Steel

The required data for computing δ_1 is provided below:

$\alpha_1 = 9.278*10^{-6}\ {}^{o}F^{-1}$ (Table 3.3.1 [C-1])

$\alpha_2 = 6.58*10^{-6}\ {}^{o}F^{-1}$ (Table 3.3.2 [C-1])

R1 = 34.25 in [C-5]

R2 = 34.375 in [C-6]

$T_1 = 439^{o}F$

$T_2 = 370^{o}F$

$T_o = 70^{o}F$

Substituting the above data in Eq. C.5.2, the radial growth is computed as $\delta = 0.05$ in. The nominal cold gap between MPC shell and HI-TRAC inner shell is 0.125in. The cold gap will be reduced by 40% due to thermal expansion. Therefore it is conservative to use 30% gap reduction in the calculation of the effective thermal conductivity of air in the annular gap.

C.5.7 Mandatory Limits for Short Term Operations – Supplemental Cooling System (SCS)

In some cases, it is necessary to provide additional cooling when decay heat loads are such that short-term cladding temperature limits would be exceeded. For such situations, the Supplemental Cooling System (SCS) is required to provide additional cooling during short term operations. An SCS is required by the HI-STORM CoC for any MPC carrying one or more high burnup fuel assemblies or when the MPC heat load is such that short-term cladding temperature limits would be exceeded. The requirements and limits for the HI-STORM CoC Amendment 5 SCS are listed in the following table:

Condition	Fuel in MPC	MPC Heat Load (kW)	SCS Required
1*	All MBF	≤ 28.74	NO
2	All MBF	> 28.74	YES
3	One or more HBF	any	YES
* The highest temperatures are reached under this un-assisted cooling threshold heat load scenario. Under other conditions the mandatory use of the Supplemental Cooling System, sized to extract 36.9 kW from the MPC, will lower the fuel temperatures significantly assuring ISG 11, Rev. 3 compliance with large margins.			

The DC ISFSI license has a limit of 28.74 kW (Scenario 1 in Section 1.4). The peak cladding temperature computed for normal transfer of fuel in the HI-TRAC for this scenario is 808°F (see Table C.6) which is substantially lower than the temperature limit of 1058°F for moderate burnup fuel (MBF)†. Consequently, cladding integrity assurance is provided by large safety margins (in excess of 200°F) during onsite transfer of an MPC containing MBF emplaced in a HI-TRAC cask.

For high burnup fuel (HBF), however, the maximum computed fuel cladding temperature reported in Table C.6 is significantly greater than the temperature limit of 752°F for HBF. Consequently, it is necessary to utilize an SCS that will maintain the cladding temperatures below 400°C (752°F), during onsite transfer of an MPC containing HBF emplaced in a HI-TRAC transfer cask. Therefore, an SCS is only required for the high burnup fuel condition.

The maximum temperature of the outer surface of the MPC shell during normal on-site transfer for Scenario 1 is 453°F. If standing water is maintained in the MPC/HI-TRAC annulus space, the temperature of the MPC surface will be at the boiling temperature of water (~232°F). Therefore, in this condition, since the MPC outer surface temperature is about 220°F lower, the fuel cladding temperatures will be lower than the fuel cladding temperature limit of 752°F. Therefore, the fuel cladding temperature is maintained below its temperature limit with an SCS that maintains the presence of standing water in the MPC/HI-TRAC annulus space.

† MBF is an abbreviation for Moderate Burnup Fuel while HBF stands for High Burnup Fuel.

C.6 REFERENCES

[C-1] HI-STORM FSAR, Report HI-2002444, Rev. 7.

[C-2] FLUENT Computational Fluid Dynamics Software, Fluent Inc.

[C-3] "Pressure Loss Characteristics for In-Cell Flow of Helium in PWR and BWR MPC Storage Cells", Holtec Report HI-2043285, Rev. 7

[C-4] "Diablo Canyon MPC-32 Fuel Basket Assembly," Holtec Drawing 4458, Revision 7.

[C-5] "Diablo Canyon Enclosure Vessel," Holtec Drawing 4459, Revision 9.

[C-6] "125 Ton HI-TRAC 125D Assembly," Holtec Drawing 4460, Revision 4.

[C-7] NUREG-1536, "Standard Review Plan for Dry Cask Storage Systems," U.S. Nuclear Regulatory Commission, January 1997.

[C-8] "CWA Wall Mount Platform Assembly," Holtec Drawing 5279, Revision 10.

[C-9] HI-STORM 100 CoC, Amendments 1 to 4, USNRC Docket 72-1014.

[C-10] HI-STORM 100 CoC, Amendment 5, USNRC Docket 72-1014.

[C-11] "Cladding Considerations for the Transportation and Storage of Spent Fuel," Interim Staff Guidance – 11, Revision 3, USNRC, Washington, DC.

Table C.1

MAXIMUM MPC AND HI-TRAC TEMPERATURES DURING NORMAL ON-SITE TRANSFER CONDITION FOR LIMITING HEAT LOAD (SCENARIO 2)

Component	**Temperature °C (°F)**	**Short-Term Operation Temperature Limit[Note 1] °C (°F)**
Fuel Cladding		Moderate Burnup Fuel: 570 (1058) High Burnup Fuel: 400 (752)
MPC Basket		510 (950)
Basket Periphery		510 (950)
MPC Shell		413 (775)
HI-TRAC Inner Shell		204 (400)
Water Jacket Outer Shell		177 (350)
Water Bulk Temperature in Water Jacket		153 (307)
Axial Neutron Shield[2]		149 (300)

Note 1: The temperature limits are obtained from [C-1].

Note 2: The HI-TRAC inner shell temperature limit in the currently approved HI-STORM 100 FSAR is 400°F. But, the temperature of the inner shell is higher than the limit. See Section C.5.1 of this report for details.

1 This calculated value exceeds the allowable limit for high-burnup fuel. A Supplemental Cooling System that satisfies the criteria in Appendix 2.C of Reference C-1 shall be used to comply with applicable temperature limits when an MPC contains one or more high burnup fuel assemblies or exceeds a threshold heat load (see Section 4.5.5.1 of Reference C-1).

2 Maximum section average temperature is reported.

Table C.2

MAXIMUM MPC AND HI-TRAC TEMPERATURES DURING WATER LOSS ACCIDENT CONDITION FOR LIMITING HEAT LOAD (SCENARIO 2)

Component	**Temperature °C (°F)**	**Accident Temperature Limit[Note 1] °C (°F)**
Fuel Cladding		570 (1058)
MPC Basket		510 (950)
Basket Periphery		510 (950)
MPC Shell		413 (775)
HI-TRAC Inner Shell		316 (600)
Water Jacket Outer Shell		371 (700)
Axial Neutron Shield[3]		177 (350)

Note 1: The temperature limits of all the components except the axial neutron shield are obtained from [2] in Section 8.0 of this report.

3 Maximum section average temperature is reported.

Table C.3

MAXIMUM MPC AND FUEL CLADDING TEMPERATURES DURING FIRE ACCIDENT CONDITION FOR LIMITING HEAT LOAD (SCENARIO 2)

Component	**Temperature °C (°F)**	**Accident Temperature Limit[Note1] °C (°F)**
Fuel Cladding		570 (1058)
MPC Basket		510 (950)
Basket Periphery		510 (950)
MPC Shell		413 (775)
MPC Lid[4]		413 (775)
Note 1: The temperature limits are obtained from [2] in Section 8.0 of this report.		

[4] Maximum section average temperature is reported

Table C.4

MPC-32 CONFINEMENT BOUNDARY PRESSURE DURING ON-SITE TRANSFER FOR LIMITING HEAT LOAD (SCENARIO 2)

Conditions	**Cavity Average Temperature °C (°F)**	**Pressure kPa (psig)**	**Pressure Limit kPa (psig)**
Normal Condition (No Rod Rupture)	308 (586)	718.2 (104.2)	758.2 (110)
Water Loss Accident Condition	333 (631)	753.4 (109.3)	1378.6 (200)
Fire Accident Condition	317 (603)	730.6 (106.0)	1378.6 (200)

Table C.5

HI-TRAC WEIGHTS AND THERMAL INERTIAS

Component	Weight * kg (lbs)	Heat Capacity [C-1] J/kg-°C (Btu/lb-°F)	Thermal Inertia J/°C (Btu/°F)
HI-TRAC			
Water in Water Jacket	3821 (8424)	4182 (0.999)	15.98×10^6 (8416)
Lead	36521 (80514)	130 (0.031)	4.75×10^6 (2496)
Carbon Steel	24064 (53052)	419 (0.1)	10.08×10^6 (5305)
MPC			
Alloy-X	13523 (29813)	502 (0.12)	6.79×10^6 (3578)
Metamic	276 (609)	921 (0.22)	0.25×10^6 (134)
Fuel	23529 (51872)	234 (0.056)	5.51×10^6 (2905)
MPC Cavity Water	3131 (6904)+	4182 (0.999)	13.09×10^6 (6897)
Total value			56.45×10^6 (29731)

Note: * The components' weight are referenced from their corresponding Holtec drawings [C-4, C-5, C-6].

+ Only 50% of MPC cavity water is credited.

Table C.6

MAXIMUM MPC AND HI-TRAC TEMPERATURES
DURING NORMAL ON-SITE TRANSFER CONDITION

Component	**Temperature for Scenario 2**[Note 1] **°C (°F)**	**Temperature for Scenario 1**[Note 1] **°C (°F)**	**Short-Term Operation Temperature Limits**[Note 3] **°C (°F)**
Fuel Cladding			Moderate Burnup Fuel: 570 (1058) High Burnup Fuel: 400 (752)
MPC Basket			510 (950)
Basket Periphery			510 (950)
MPC Shell			413 (775)
HI-TRAC Inner Shell			204 (400)
Water Jacket Outer Shell			177 (350)
Water Bulk Temperature in Water Jacket			153 (307)
Axial Neutron Shield[5]			149 (300)

Note 1: These scenarios are defined in Section 1.4 of this report.

Note 2: The HI-TRAC inner shell temperature limit in the currently approved HI-STORM 100 FSAR is 400°F. But, the temperature of the inner shell is higher than the limit. See Section C.5.1 of this report for details.

Note 3: The temperature limits are obtained from [2] in Section 8.0 of this report.

5 Maximum section average temperature is reported.

Table C.7

MPC-32 CONFINEMENT BOUNDARY PRESSURE DURING ON-SITE TRANSFER FOR SCENARIO 1

Conditions	**Cavity Average Temperature °C (°F)**	**Pressure kPa (psig)**	**Pressure Limit kPa (psig)**
Normal Condition (No Rod Rupture)	274 (525)	513.5 (74.5)	689.3 (100)

Appendix D

MPC-32 Free Volume Calculations
(Total 3 pages)

[PROPRIETARY]

Appendix E

HI-TRAC Fire Event Calculations
(Total 5 pages)

[PROPRIETARY]

Appendix F

Grid Convergence Index Calculations
(Total 7 pages)

[PROPRIETARY]

Appendix G

Evaluation of Potential Error in FLUENT Code
(Total 4 pages)

G.1 INTRODUCTION

The thermal analyses for Diablo Canyon Dry Storage were performed and presented in this report. Version 6.3.26 of CFD code FLUENT [G-2] was used to perform the analyses. [**PROPRIETARY**

]. This appendix evaluates the effect of this potential FLUENT error on the calculations that support dry storage system at Diablo Canyon.

G.2 METHODOLOGY AND RESULTS

To address the issue mentioned in the previous section, an additional analysis is performed reported in this appendix, to determine the impact of potential FLUENT error on the thermal evaluations performed in this report. The steady state evaluation of the loaded HI-STORM placed in the Cask Transfer Facility (CTF) discussed in sub-section B.5.5 was re-performed for this purpose, since that analysis had the least margin to the Peak Cladding Temperature limit. The converged mesh (Mesh 2) discussed in sub-section B.5.5 was used in the analysis presented in this appendix. **[PROPRIETARY**

] The thermal models, methodology and assumptions also remain unchanged. The results of the new evaluations are summarized in Table G.1. From the results presented in the table, it is concluded that the potential error in the FLUENT code has a small effect on the predicted component temperatures presented in this report and all the components will remain below their respective temperature limits for all evaluated conditions. **[PROPRIETARY**

]

G.3 COMPUTER CODES AND FILES

The computer code FLUENT Version 6.3.26 is used in the thermal calculation.

```
Directory of G:\Projects\1073\REPORTS\Thermal Reports\HI-STORM\fluent
04/14/2011  09:03 AM       118,935,350    CTF-28.74kw-mesh2-emm=0.cas
04/14/2011  05:40 AM     1,815,698,288    CTF-28.74kw-mesh2-emm=0.dat
```

```
09/15/2010  05:24 PM            2,689    udf-diablo-28.74kw.c
```

G.4 REFERENCES

[G-1] "Final Safety Analysis Report for the HI-STORM 100 Cask System", Holtec Report HI-2002444, Revision 7.

[G-2] FLUENT Computational Fluid Dynamics Software, Version 6.3.26 (Fluent Inc., 10 Cavendish Court, Lebanon, NH – 03766).

Table G.1

EFFECT OF POTENTIAL FLUENT ERROR ON HI-STORM 100SA NORMAL STORAGE MPC AND OVERPACK TEMPERATURES IN THE CASK TRANSFER FACILITY (CTF) FOR SCENARIO 1

Component			
Fuel Cladding			
MPC Basket			
Basket Periphery			
MPC Shell			
Overpack Inner Shell			
Overpack Outer Shell			
Lid Bottom Plate			
Lid Top Plate			
Overpack Body Concrete[2]			
Overpack Lid Concrete[2]			
Average Air Outlet			
Pressure kPa (psig)			
MPC Cavity			

[1] The results correspond to converged mesh (Mesh 2) for HI-STORM in CTF condition discussed in Section B.5.5.
[2] Maximum section average temperature is reported.

Enclosure
Attachment 2
PG&E Letter DIL-11-004

Holtec Affidavit for Holtec International Report HI-2104625, "Three Dimensional Thermal-Hydraulic Analyses for Diablo Canyon Site-Specific HI-STORM System Design," Revision 5 – Proprietary Version, with one disc of proprietary data files on optical storage medium (OSM) DVD-ROM

HOLTEC INTERNATIONAL

Holtec Center, 555 Lincoln Drive West, Marlton, NJ 08053
Telephone (856) 797-0900
Fax (856) 797-0909

U.S. Nuclear Regulatory Commission
ATTN: Document Control Desk

AFFIDAVIT PURSUANT TO 10 CFR 2.390

I, Kelly Kozink, depose and state as follows:

(1) I am the Holtec International Project Manager for the Diablo Canyon Independent Spent Fuel Storage Installation Project and have reviewed the information described in paragraph (2) which is sought to be withheld, and am authorized to apply for its withholding.

(2) The information sought to be withheld is Revision 5 of Holtec Report HI-2104625 and the accompanying CD-ROM with computer data files therefrom, which contains Holtec Proprietary information and is appropriately marked as such.

(3) In making this application for withholding of proprietary information of which it is the owner, Holtec International relies upon the exemption from disclosure set forth in the Freedom of Information Act ("FOIA"), 5 USC Sec. 552(b)(4) and the Trade Secrets Act, 18 USC Sec. 1905, and NRC regulations 10CFR Part 9.17(a)(4), 2.390(a)(4), and 2.390(b)(1) for "trade secrets and commercial or financial information obtained from a person and privileged or confidential" (Exemption 4). The material for which exemption from disclosure is here sought is all "confidential commercial information", and some portions also qualify under the narrower definition of "trade secret", within the meanings assigned to those terms for purposes of FOIA Exemption 4 in, respectively, Critical Mass Energy Project v. Nuclear Regulatory Commission, 975F2d871 (DC Cir. 1992), and Public Citizen Health Research Group v. FDA, 704F2d1280 (DC Cir. 1983).

HOLTEC INTERNATIONAL

Holtec Center, 555 Lincoln Drive West, Marlton, NJ 08053
Telephone (856) 797-0900
Fax (856) 797-0909

U.S. Nuclear Regulatory Commission
ATTN: Document Control Desk

AFFIDAVIT PURSUANT TO 10 CFR 2.390

---

(4) Some examples of categories of information which fit into the definition of proprietary information are:

a. Information that discloses a process, method, or apparatus, including supporting data and analyses, where prevention of its use by Holtec's competitors without license from Holtec International constitutes a competitive economic advantage over other companies;

b. Information which, if used by a competitor, would reduce his expenditure of resources or improve his competitive position in the design, manufacture, shipment, installation, assurance of quality, or licensing of a similar product.

c. Information which reveals cost or price information, production, capacities, budget levels, or commercial strategies of Holtec International, its customers, or its suppliers;

d. Information which reveals aspects of past, present, or future Holtec International customer-funded development plans and programs of potential commercial value to Holtec International;

e. Information which discloses patentable subject matter for which it may be desirable to obtain patent protection.

The information sought to be withheld is considered to be proprietary for the reasons set forth in paragraphs 4.a and 4.b, above.

(5) The information sought to be withheld is being submitted to the NRC in confidence. The information (including that compiled from many sources) is of

HOLTEC INTERNATIONAL

Holtec Center, 555 Lincoln Drive West, Marlton, NJ 08053
Telephone (856) 797-0900
Fax (856) 797-0909

U.S. Nuclear Regulatory Commission
ATTN: Document Control Desk

AFFIDAVIT PURSUANT TO 10 CFR 2.390

a sort customarily held in confidence by Holtec International, and is in fact so held. The information sought to be withheld has, to the best of my knowledge and belief, consistently been held in confidence by Holtec International. No public disclosure has been made, and it is not available in public sources. All disclosures to third parties, including any required transmittals to the NRC, have been made, or must be made, pursuant to regulatory provisions or proprietary agreements which provide for maintenance of the information in confidence. Its initial designation as proprietary information, and the subsequent steps taken to prevent its unauthorized disclosure, are as set forth in paragraphs (6) and (7) following.

(6) Initial approval of proprietary treatment of a document is made by the manager of the originating component, the person most likely to be acquainted with the value and sensitivity of the information in relation to industry knowledge. Access to such documents within Holtec International is limited on a "need to know" basis.

(7) The procedure for approval of external release of such a document typically requires review by the staff manager, project manager, principal scientist or other equivalent authority, by the manager of the cognizant marketing function (or his designee), and by the Legal Operation, for technical content, competitive effect, and determination of the accuracy of the proprietary designation. Disclosures outside Holtec International are limited to regulatory bodies, customers, and potential customers, and their agents, suppliers, and licensees, and others with a legitimate need for the information, and then only in accordance with appropriate regulatory provisions or proprietary agreements.

(8) The information classified as proprietary was developed and compiled by Holtec International at a significant cost to Holtec International. This information is classified as proprietary because it contains detailed descriptions of analytical

HOLTEC INTERNATIONAL

Holtec Center, 555 Lincoln Drive West, Marlton, NJ 08053
Telephone (856) 797-0900
Fax (856) 797-0909

U.S. Nuclear Regulatory Commission
ATTN: Document Control Desk

AFFIDAVIT PURSUANT TO 10 CFR 2.390

approaches and methodologies not available elsewhere. This information would provide other parties, including competitors, with information from Holtec International's technical database and the results of evaluations performed by Holtec International. A substantial effort has been expended by Holtec International to develop this information. Release of this information would improve a competitor's position because it would enable Holtec's competitor to copy our technology and offer it for sale in competition with our company, causing us financial injury.

(9) Public disclosure of the information sought to be withheld is likely to cause substantial harm to Holtec International's competitive position and foreclose or reduce the availability of profit-making opportunities. The information is part of Holtec International's comprehensive spent fuel storage technology base, and its commercial value extends beyond the original development cost. The value of the technology base goes beyond the extensive physical database and analytical methodology, and includes development of the expertise to determine and apply the appropriate evaluation process.

The research, development, engineering, and analytical costs comprise a substantial investment of time and money by Holtec International.

The precise value of the expertise to devise an evaluation process and apply the correct analytical methodology is difficult to quantify, but it clearly is substantial.

Holtec International's competitive advantage will be lost if its competitors are able to use the results of the Holtec International experience to normalize or verify their own process or if they are able to claim an equivalent understanding by demonstrating that they can arrive at the same or similar conclusions.

HOLTEC INTERNATIONAL

Holtec Center, 555 Lincoln Drive West, Marlton, NJ 08053
Telephone (856) 797-0900
Fax (856) 797-0909

U.S. Nuclear Regulatory Commission
ATTN: Document Control Desk

AFFIDAVIT PURSUANT TO 10 CFR 2.390

The value of this information to Holtec International would be lost if the information were disclosed to the public. Making such information available to competitors without their having been required to undertake a similar expenditure of resources would unfairly provide competitors with a windfall, and deprive Holtec International of the opportunity to exercise its competitive advantage to seek an adequate return on its large investment in developing these very valuable analytical tools.

Executed at Marlton, New Jersey, this 20th day of June, 2011.

Kelly Kozink
Holtec International