Enclosure 1

UAP-HF-11237
Docket No. 52-021

Revised Responses to Request for Additional Information
No. 571-4365 Revision 0

July 2011

RESPONSE TO REQUEST FOR ADDITIONAL INFORMATION

07/29/2011

US-APWR Design Certification

Mitsubishi Heavy Industries

Docket No. 52-021

RAI NO.:	**NO. 571-4365 REVISION 0**
SRP SECTION:	**09.02.02 – REACTOR AUXILIARY COOLING WATER SYSTEM**
APPLICATION SECTION:	**9.2.2**
DATE OF RAI ISSUE:	**4/13/2010**

QUESTION NO.: 09.02.02-48
Follow-up to RAI 362-2278, question 09.02.02-24

Based on the staff's review of the applicant's response to RAI 09.02.02-24, the following items should be addressed:

1. The total effects of a seismic event and the breach of the non-safety piping header A2 or C2 was discussed in the RAI response, including a discussion on how the safety related headers A1 or C1 may drain down in addition to headers A2 or C2 until they are isolated by the automatic closure signal from the surge tank low level. However, the consequence of isolation of cooling flow to the charging pumps, spent fuel pool, reactor cooling pumps (RCPs) was not explained for this event (potential loss of RCP seal and thermal barrier cooling). This discussion needs to be included in the RAI response and in the DCD.
2. Specifically, describe the operator actions required to re-establish flow to headers A1 or C1 once the non-safety headers A2 or C2 are isolated.
3. Describe what valves are to be closed by the operators for this event since some valves have automatic closure signals on surge tank low level.
4. The isolation of air operated valves (for example AOV-661A) for the non-safety loads was not part of this RAI discussion and should be addressed in the RAI response and in the DCD.
5. The proposed Tier 2 DCD markup text (added in Revision 2) does not provide the detail that was provided in the response to the RAI as would be appropriate in the DCD. Provide additional details in the DCD related to non-safety related CCW header isolation. The discussion of the non-safety seismic category II piping system was not part of the RAI discussion and should be included in DCD.

Reference: MHI's Responses to US-APWR DCD RAI No. 362-2278; MHI Ref: UAP-HF-09333; dated June 19, 2009; ML091760624.

ANSWER:

(1) In the event of an earthquake, the non-safety piping associated with the A2 and C2 headers may fail, which could result in leakage from the system and subsequent lowering of the surge tank water level. However, redundant isolation valves on the supply lines between the seismic category I and non-safety piping (NCS-AOV-057A/B and NCS-AOV-058A/B) automatically close on surge tank low-low level which would isolate failed piping and stop CCWS leakage. Similarly, redundant check valves (NCS-VLV-036A/B and NCS-VLV-037A/B) in the return lines from the non-safety piping will stop a CCWS leak if there is a break in the non-safety piping. For this reason, isolation of the header tie line supply (NCS-MOV-020A, B, C, and D) and return valves (NCS-MOV-007A, B, C, and D) on a surge tank low-low water level signal is not required to protect the safety function of CCWS. Therefore, the DCD will be changed to eliminate the surge tank low-low water level signal from the header tie line isolation valves. In addition, the surge tank level signal description in DCD Tier 2 Figure 9.2.2-1, provided in the response to Question 9.2.2-69, changed "header tie isolation " to "non-safety piping isolation", which is consistent with the purpose of the isolation.

As discussed in the response to Question Q9.2.2-58, isolation of the header tie line valves on either "P" or "(S+UV)" signals will be removed in a future DCD revision. Thus, cooling flow is not interrupted to the charging pumps, spent fuel pool or reactor cooling pumps upon receipt of an ESFAS signal as indicated in DCD Rev. 3. The response to Question 9.2.2-55 removes testing of the actuation logic for the header tie line isolation valves that is currently described in DCD Revision 3 Subsection 14.2.12.1.87.

(2) As indicated in the preceding Item (1) response, there will be no automatic isolation signals for the header tie line valves. Thus, there are no operator actions required to reestablish flow to the A1 or C1 headers after automatic isolation.

(3) A low-low surge tank water level signal results in automatic isolation of the non-safety piping (most susceptible to leakage) with no operator intervention required. The valves that close are the supply isolation valves (NCS-AOV-057A/B and NCS-AOV-058A/B on the low-low tank level signal) and the return check valves (NCS-VLV-036A/B and NCS-VLV-037A/B) located at the boundary with the non-safety piping.

(4) The pneumatic-operated valves (NCS-AOV-057A/B and NCS-AOV-058A/B) that will be automatically closed by a low-low surge tank water level signal receive control air from the non-safety IAS system. As a consequence, they may not operate upon a low-low surge tank water level signal due to loss of control air. However, in the event of an IAS failure, these valves would fail in the closed position thereby maintaining their safety function. (Note: As indicated in the response to Question 9.2.2-49, the isolation valve configuration reflected in DCD Revision 3 has been changed; thus, the cited example of NCS-AOV-661A is no longer applicable.)

(5) The design for isolating non-safety piping has been changed. As a result, piping within the isolation boundaries no longer includes Seismic Category II piping; i.e., only Seismic Category I piping is included within isolation boundaries. The reactor building wherein these piping systems are installed is designed as Seismic Category I. Thus, the design is consistent with GDC 4 and failure of Seismic II piping due to internal missiles is not postulated. In summary, in the event of an earthquake that results in failure of the non-safety piping, leakage will be contained by a surge tank low-low water level signal closure of supply valves (NCS-AOV-057A/B and NCS-AOV-058A/B) and the return check valves (NCS-VLV-036A/B and NCS-VLV-037A/B) located at the boundary with the non-safety piping.

DCD Tier 2, Section 9.2.2.2 will be revised to reflect the revised design for isolating non-safety piping. DCD Tier 1 Section 2.2.3 will be revised to address ITAAC for Seismic Category II systems and components.

Impact on DCD

DCD Tier 1 Subsection 2.2.3 will be revised as follows:

- Subsection 2.2.3.1, Item 23 to Seismic Category II include systems and components
- Table 2.2-4, Item 23 to Seismic Category II include systems and components

DCD Tier 1 Subsection 2.5.1 will be revised as follows:

- Table 2.5.1-4: Deletion of "Component Cooling Water Supply and Return Header Tie Line Isolation Interlock

DCD Tier 1 Subsection 2.7.3.3.1 will be revised as follows:

- Table 2.7.3.3-2 (Sheet 1 of 8): Remove Low-low CCW surge tank level, (S+UV) and P signals as applicable to control of NCS-MOV-020 A, B, C, D.
- Table 2.7.3.3-2 (Sheet 2 of 8): Remove Low-low CCW surge tank level, (S+UV) and P signals as applicable to control of NCS-MOV-007 A, B, C, D.

DCD Tier 2 Subsection 7.6.1.5 will be revised as follows:

- Replaced Subsection "CCW Supply and Return Header Tie Line Isolation Interlock" with "Not Used" because automatic isolation of the header tie line does not occur and manual action is required to achieve independence between trains.
- Deleted Figure 7.6-6 consistent with deletion of automatic interlocks for header tie line valves.

DCD Tier 2 Subsection 9.2.2.2 will be revised as follows:

- Revised to add additional description of isolation of non-safety piping.

DCD Tier 2 Subsection 9.2.2.2.1.5 "Header tie line isolation valve" will be revised as follows:

- Revised to remove automatic closure of header tie line isolation valves and the necessity to reopen the valves to provide RCP thermal barrier and spent fuel pool heat exchanger cooling.
- Added statement that the valves are operated from the MCR when an operator determines that train separation is required.
- Add statement that closure time will not be so rapid as to cause a water hammer concern.

DCD Tier 2 Subsection 9.2.2.5.4 will be revised as follows:

- Revised to remove reference to automatic header tie line isolation on low-low surge tank water level.

DCD Tier 2 Subsection 19.1.7.1 will be revised as follows:

- Table 19.1-119 (Sheet 22 of 46): Delete Item 17 relating to automatic closure of CCW header tie line.
- Revise Figure 19.1-2 (Sheets 14, 15) to delete automatic closure of header tie line isolation valves.

Impact on R-COLA
There is no impact on the R-COLA.

Impact on S-COLA
There is no impact on the S-COLA.

Impact on PRA
Small change resulting in slight improvement in core damage frequency.

below the internal design flood level, as shown in Table 2.2-5, are fitted with water-tight seals.

12. Safety-related electrical, instrumentation, and control equipment in the R/B and each PS/B is located above the internal design flood level.

13. For the R/B and each PS/B, external walls below flood level are a minimum of two feet thick to protect against water seepage.

14. Penetrations in the external walls of the R/B and each PS/B, as shown in Figures 2.2-14 through 2.2-25, that are at or below design basis flood level, are fitted with water-tight seals to protect against external flooding.

15. Deleted.

16. Deleted.

17. Redundant safe shutdown components and associated electrical divisions outside the containment and the control room complex are separated by 3-hour rated fire barriers to preserve the capability to safely shutdown the plant following a fire.

18.a. Penetrations and openings, other than ventilation ducts, through fire barriers are protected against fire.

18.b. Ventilation ducts that penetrate fire barriers are protected by fire dampers.

19. Deleted.

20. Deleted.

21. Safety-related SSCs are protected from any credible internal missile sources inside and outside the containment.

22. Deleted.

23.a The seismic Category II structures identified in Table 2.2-1 will not impair the ability of ~~safety-related~~ seismic Category I SSC~~s~~ to perform its design basis safety~~their safety-related~~ function~~s~~ during or following an SSE.

23.b Seismic Category II systems and components will not impair the ability of seismic Category I SSC to perform its design basis safety function during or following an SSE.

24. SSCs that require evaluation in the seismic fragilities task of a seismic margin analysis have high confidence of low probability of failure (HCLPF) values equal to or greater than the review level earthquake.

2.2.4 Inspection, Tests, Analyses, and Acceptance Criteria

Table 2.2-4 Structural and Systems Engineering Inspections, Tests, Analyses, and Acceptance Criteria (Sheet 5 of ~~4~~6)

Design Commitment	Inspections, Tests, Analyses	Acceptance Criteria
21. Safety-related SSCs are protected from any credible internal missile sources inside and outside the containment.	21. Inspections and analyses will be performed to verify that as-built safety-related SSCs are protected from credible internal missile sources by the methods described in Section 2.2.2.1.	21. A report exists and concludes that as-built safety-related SSCs are protected from credible internal missile sources by the methods described in Section 2.2.2.1.
22. Deleted.	22. Deleted.	22. Deleted.
23.a The seismic Category II structures identified in Table 2.2-1 will not impair the ability of seismic Category I~~safety-related~~ SSC~~s~~ to perform its design basis safety~~their safety-related~~ function~~s~~ during or following an SSE.	23.a Analyses and inspections will be performed to verify that the~~of the design and~~ as-built configuration of seismic Category II structures identified in Table 2.2-1 ~~will be performed to verify that these structures~~ will not impair the ability of seismic Category I~~safety-related~~ SSC~~s~~ to perform its design basis safety~~their safety-related~~ function~~s~~ during or following an SSE.	23.a A report exists and concludes that the as-built seismic Category II structures identified in Table 2.2-1 will not impair the ability of seismic Category I~~safety-related~~ SSC~~s~~ to perform its design basis safety~~their safety-related~~ function~~s~~ during or following an SSE.
23.b Seismic Category II systems and components will not impair the ability of seismic Category I SSC to perform its design basis safety function during or following an SSE.	23.b Analyses and inspections will be performed to verify that the as-built configuration of seismic Category II systems and components will not impair the ability of a seismic Category I SSC to perform its design basis safety function during or following an SSE.	23.b A report exists and concludes that as-built seismic Category II systems and components will not impair the ability of a seismic Category I SSC to perform its design basis safety function during or following an SSE.
24. SSCs that require evaluation in the seismic fragilities task of a seismic margin analysis have high confidence of low probability of failure (HCLPF) values equal to or greater than the review level earthquake.	24.i Analyses will be performed to verify that the SSCs requiring evaluation in the seismic fragilities task of a seismic margin assessment have HCLPF values equal to or greater than the review level earthquake.	24.i Reports exist and conclude that the SSCs evaluated in the seismic fragilities task of the seismic margin assessment have HCLPF values equal to or greater than the review level earthquake.

Table 2.5.1-3 ESF Actuations and Monitored Parameters (Sheet 3 of 3)

ESF Function	Actuation Signal	Monitored Variables
CVCS Isolation	High Pressurizer Water Level	Pressurizer Water Level
	Manual Actuation	Manual Switch Position (CVCS Isolation Switch)

Table 2.5.1-4 Interlocks Important to Safety

Containment Spray/Residual Heat Removal Pump Hot Leg Isolation Valve Open Permissive Interlock
Simultaneous-Open Block Interlock with Residual Heat Removal Discharge Line Containment Isolation Valve and Containment Spray Header Containment Isolation Valve
Simultaneous-Open Block Interlock with Containment Spray/Residual Heat Removal Pump Hot Leg Isolation Valve and Containment Spray Header Containment Isolation Valve
Reactor Makeup Water Line Isolation Interlock
Accumulator Discharge Valve Open Interlock
~~Component Cooling Water Supply and Return Header Tie Line Isolation Interlock~~
RCP Thermal Barrier Heat Exchanger Component Cooling Water Return Line Isolation Interlock
Low-Pressure Letdown Line Isolation Interlock

Table 2.7.3.3-2 Component Cooling Water System Equipment Characteristics (Sheet 1 of 8)

Equipment Name	Tag No.	ASME Code Section III Class	Seismic Category I	Remotely Operated Valve	Class 1E/ Qual. For Harsh Envir.	PSMS Control	Active Safety Function	Loss of Motive Power Position
Component cooling water (CCW) heat exchangers	NCS-MHX-001 A, B, C, D	3	Yes	-	-/-	-	-	-
Component cooling water pumps	NCS-MPP-001 A, B, C, D	3	Yes	-	Yes/No	ECCS Actuation	Start	-
						LOOP sequence	Start	
						Low CCW header pressure	Start	
Component cooling water surge tanks	NCS-MTK-001 A, B	3	Yes	-	-/-	-	-	-
Component cooling water pump discharge check valves	NCS-VLV-016 A, B, C, D	3	Yes	-	-/-	-	Transfer Open	-
CCW supply header tie line isolation valves	NCS-MOV-020 A, B, C, D	3	Yes	Yes	Yes/No	~~ECCS Actuation and undervoltage signal~~	~~Transfer Closed~~	As Is
						~~Containment Spray~~	~~Transfer Closed~~	
						~~Low-low CCW surge tank water level~~	~~Transfer Closed~~	
						Remote Manual	Transfer Open/ Transfer Closed	

Table 2.7.3.3-2 Component Cooling Water System Equipment Characteristics (Sheet 2 of 8)

Equipment Name	Tag No.	ASME Code Section III Class	Seismic Category I	Remotely Operated Valve	Class 1E/ Qual. For Harsh Envir	PSMS Control	Active Safety Function	Loss of Motive Power Position
CCW return header tie line isolation valves	NCS-MOV-007 A, B, C, D	3	Yes	Yes	Yes/No	~~ECCS Actuation and undervoltage signal~~	~~Transfer Closed~~	As Is
						~~Containment Spray~~	~~Transfer Closed~~	
						~~Low-low CCW surge tank water level~~	~~Transfer Closed~~	
						Remote Manual	Transfer Open/ Transfer Closed	
CS/RHR heat exchanger CCW outlet valves	NCS-MOV-145 A, B, C, D	3	Yes	Yes	Yes/No	ECCS Actuation and CCW pump start	Transfer Open	As Is
						Remote Manual	Transfer Open/ Transfer Closed	
RCP CCW supply line outside containment isolation valves	NCS-MOV-402 A, B	2	Yes	Yes	Yes/No	Containment Isolation Phase B	Transfer Closed	As Is
						Remote Manual	Transfer Open/ Transfer Closed	

7.6.1.4 Accumulator Discharge Valve Open Interlock

Each of the four RCS loops is provided with a separate accumulator. Each ECCS accumulator discharge line connecting to the RCS cold leg is provided with a motor operated isolation valve. Normally the isolation valve is open; therefore, the accumulator system is normally available for its designed function.

The accumulator discharge valve can be closed manually. However, an interlock is provided to open this valve when the reactor coolant pressure is above the P-11 setpoint. The interlocks for these valves are shown in Figure 7.6-5. The safety related interlocks preclude multiple valve misalignment due to spurious commands from operational VDUs.

This interlock may be manually bypassed for test and maintenance to close the accumulator discharge valve by two deliberate operator actions. If this valve is closed and not selected to "Lock", then the ECCS actuation signal will automatically open the valve and make the accumulator system available. The "Lock" function is described in Topical Report MUAP-07007 (Reference 7.6-1) Section 4.5.3.a.

The accumulator system can be bypassed for test and maintenance by manually closing its discharge valve and selecting it to "Lock". In the "Lock" mode, the accumulator discharge valves will not automatically open, therefore the affected accumulator will be un-available for its designed ESF function. During this condition, the inoperable status of the accumulator is alarmed in the MCR and indicated continuously on the BISI system displays.

Not Used

The signal path for this interlock is from the pressurizer pressure transmitters to the RPS, and then to the SLS, which controls these MOVs via motor control centers.

7.6.1.5 CCW Supply and Return Header Tie Line Isolation Interlock

~~The CCW system consists of two independent subsystems. Each subsystem consists of two 50% trains. One subsystem consists of trains A & B, and the other subsystem consists of trains C & D, for a total of four 50% trains. There are cross-connections between trains A and B, and between trains C and D. Each subsystem supplies a non-essential safety class loop and a non-safety loop. There are two series motor-operated isolation valves for each supply and return tie line between separate trains. These isolation valves ensure each mechanical safety train is isolated from any potential passive failure in the non-safety portion or another mechanical safety train of the CCWS.~~

~~The two series isolation valves in each CCW header are automatically closed during the following conditions:~~

- ~~ECCS actuation combined with LOOP~~
- ~~CS actuation~~
- ~~Low CCW surge tank water level~~

~~For NCS-MOV-007A, B and NCS-MOV-020A, B the piping diagrams for these valves are shown in Figure 9.2.2-1 (Sheet 1 of 9) in Chapter 9, and for NCS-MOV-007C, D and NCS-MOV-020C, D in Figure 9.2.2-1 (Sheet 2 of 9) of Chapter 9.~~

~~The interlocks for these valves are shown in Figure 7.6-6. These interlocks ensure the independence of each safety mechanical train of the CCWS thereby providing CCW coolant to ESF systems required for mitigating conditions of the event. The safety related interlocks preclude multiple valve misalignment due to spurious commands from operational VDUs.~~

~~These interlocks may be manually bypassed for reopening the valves to restore RCP seal and spent fuel pit heat exchanger cooling, if required. The bypass can be selected from the safety VDU. To select the bypass from the operational VDU, the Bypass Permissive for the respective train must be enabled.~~

~~Two series valves assigned to different trains ensures isolation even in the presence of a single failure.~~

~~The signal path for the ECCS and CS interlocks is from the ESFAS to the SLS that controls the isolation valves through motor control centers. The signal path for the surge tank interlock is from local level transmitters to the RPS to the SLS for control of these same valves.~~

7.6.1.6 RCP Thermal Barrier HX CCW Return Line Isolation Interlock

Each CCW subsystem supplies cooling water to the RCP thermal barrier heat exchanger. Two motor-operated valves and flow meters are located at the CCW outlet line of the RCP thermal barrier heat exchanger.

These valves close automatically upon a high flow rate signal at the outlet of this line in the event of in-leakage from the RCS through the thermal barrier heat exchanger, and prevent this in-leakage from further contaminating the CCWS.

The interlocks for these valves are shown in Figure 7.6-7. The safety related interlocks preclude multiple valve misalignment due to spurious commands from Operational VDUs.

These interlocks ensure isolation of in-leakage from the RCS through the thermal barrier heat exchanger.

The signal path for these interlocks is from the local flow transmitters to the RPS, and then SLS, which controls these MOVs via motor control centers.

7.6.1.7 Low-pressure Letdown Line Isolation Interlock

A single normally closed air-operated valve is placed in each of the two low pressure letdown lines connected to two of the four RHR trains. During the normal plant cool down operation, one of these valves is open to divert a portion of the RCS flow to the CVCS for the purpose of purification and RCS inventory control.

Additionally at mid-loop operation during plant shutdown, these valves are automatically closed and the CVCS is isolated from the RHRS after receiving the RCS loop low-level signal to prevent loss of RCS inventory.

The interlocks for these valves are shown in Figure 7.6-8. One of these valves of RHS-(AOV-024B,024C) the piping diagrams for these valves are shown in Figure 5.4.7-2 in

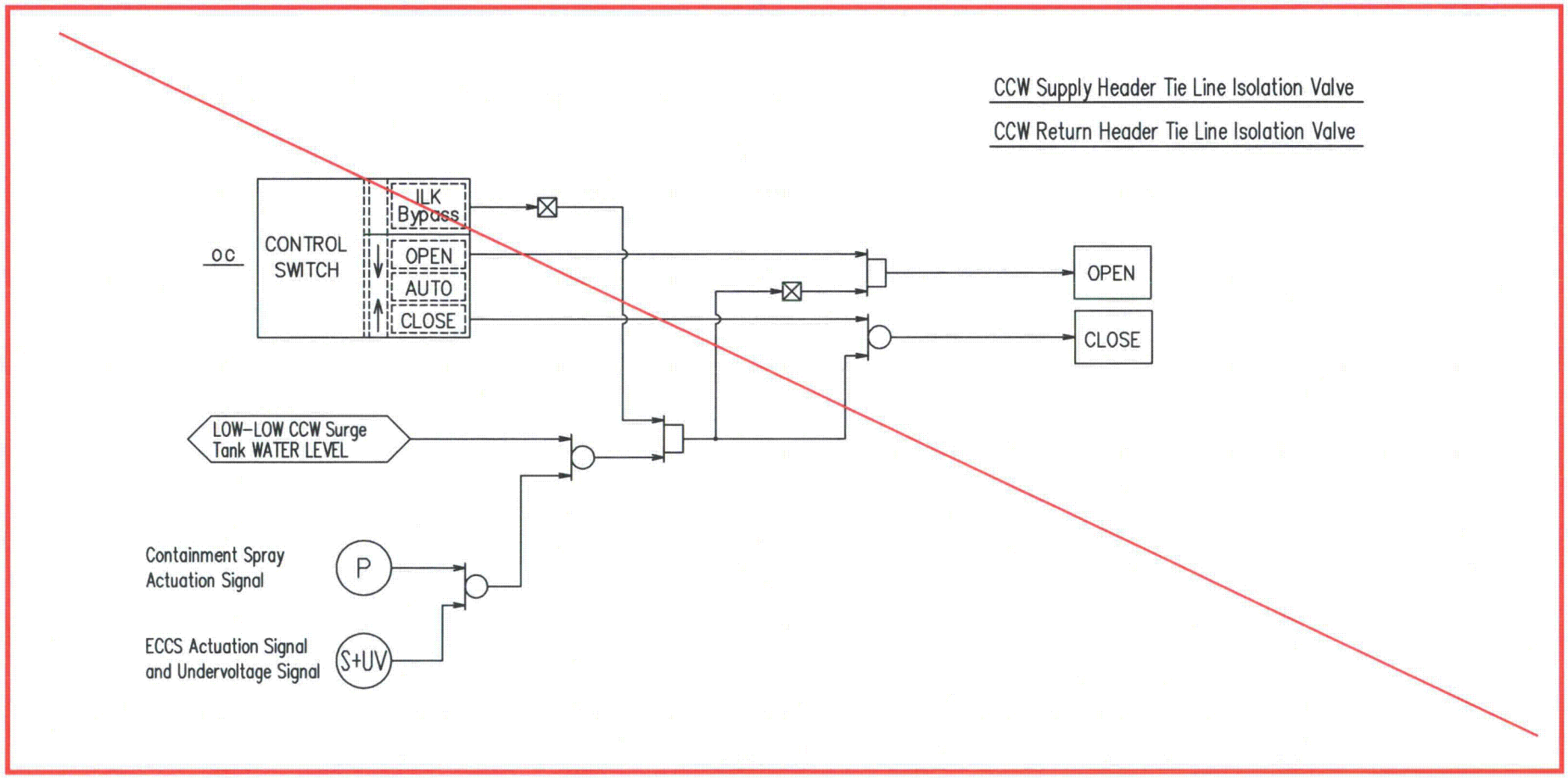

Figure 7.6-6 ~~Interlocks for CCW Header Tie Line Isolation Valves~~ Not Used

exchanger, seal water heat exchanger, blowdown sample cooler, B.A. evaporator, waste gas compressor, and so on. The CCWS provides sufficient surge tank capacity below the low level alarm to allow for operators to take action.

9.2.2.1.2.2 Normal Plant Cooldown

The CCWS is designed to remove both decay and sensible heat from the core and the reactor coolant system in addition to some normal operating heat loads during the latter stages of plant cooldown. The component cooling water system is sized to reduce the temperature of the reactor coolant system from 350°F at approximately 4 hours after reactor shutdown to 140°F using 4 trains while maintaining the component cooling water supply below 110°F. Failure of one train of CCW with another train unavailable due to maintenance will not prevent achieving cold shutdown conditions. The CCWS continues to provide cooling water to the residual heat removal system throughout the shutdown after cooldown is complete.

9.2.2.1.2.3 Refueling

During refueling, cooling water flow is provided to spent fuel pool heat exchangers to cool the spent fuel pool. For a full core off-load cooling water is also supplied to a normal residual heat removal heat exchanger as part of spent fuel pool cooling. The CCWS maintains the spent fuel pit water temperature below 120°F. System operation is with both CCWS divisions available.

9.2.2.2 System Description

The system flow diagram is shown in Figure 9.2.2-1.

The CCWS is the closed loop system that functions as an intermediate system between the various components cooled by CCWS and the ESWS, (Subsection 9.2.1). The CCWS transfers heat and prevents direct leakage of the radioactive fluid from the components to the ESWS.

The CCWS consists of two independent subsystems. One subsystem consists of trains A & B, and the other subsystem consists of trains C & D, for a total of four trains. Each train has one CCWP and one CCW HX and provides 50% of the cooling capacity required for safety function.

"A1" and "A2" from the header tie line between A and B, and "C1" and "C2" from the header tie line between C and D.

Electrical power to the CCWS is supplied from Class 1E bus
Class 1E power supply so that the system is capable to oper
power.

There is the header tie line between trains A and B, and between trains C and D. The header tie line in each subsystem branches into two loops. See Table 9.2.2-1 for the components supplied by each loop.

Each subsystem is served by one CCW surge tank. The CCW surge tank is installed at the highest point of the system to facilitate system air venting to ensure a water solid closed loop and to provide the net positive suction head at the CCWP suction. In addition,

the surge tank accommodates the thermal expansion and contraction of the c a g water and potential leakage performing CCWS.

Demineralized quality water with corrosion inhibitors is circulated in the CCWS. No outside impurities are expected to be infiltrated in the system, therefore, the CCW filter is not necessary. The impacts of non-safety related SSC failures in the CCW system will not adversely affect safety-related SSCs to perform their safety related function since the direct impact of a pipe break in the non-safety portion of the system can be accommodated. The CCW system's safety function will be maintained as a result of the nonsafety-related piping failure, and the indirect impact of the pipe break will not impact any SSC safety function.

in the event of a

Each non-safety CCW header is isolated by redundant valves between the seismic category I and non-safety piping. Air operated valves (NCS-AOV-057A/B and NCS-AOV-058A/B) isolate the supply lines and check valves (NCS-VLV-036A/B and NCS-VLV-037A/B) isolate the return lines. The valves are located on the Reactor Building side of the boundary between seismic category I and non-safety piping. All non-safety related components are supplied from the two non-safety CCW headers A2 and C2 (refer to Table 9.2.2-1). Therefore, the

ow. Design parameters for major components

S to the ESWS. The CCW HXs are plate type.
p C as defined in Regulatory Guide 1.26 (Ref. 9.2.11-3), seismic category I, and are designed in accordance with the requirements of the ASME Section III, class 3.

9.2.2.2.1.2 CCWP

The CCWP circulates cooling water through the CCW HX and the components cooled by CCWS.

The pumps are horizontal centrifugal pumps and driven by an ac powered induction motor.

The pumps are designated quality group C as defined in Regulatory Guide 1.26, seismic category I, and are designed in accordance with the requirements of the ASME Section III, class 3.

The pumps are designed in consideration of head losses in the cooling water inlet piping based on full power flow conditions, increased pipe roughness, maximum pressure drop through the system heat exchangers, and the actual amount of excess margin etc.

The surge tanks are located at a higher elevation than the pumps to ensure sufficient NPSH margin is available.

9.2.2.2.1.3 CCW Surge Tank

The CCW surge tanks are connected to the suction side of the CCWP. The surge tank accommodates the thermal expansion and contraction of the cooling water and potential leakage into or from the CCWS. Makeup water is supplied to the respective surge line.

The CCW surge tank is designated quality group C as defined in Regulatory Guide 1.26, seismic category I, and is designed to the requirements of the ASME Section III, class 3.

In case of a small leak out of the system, makeup water is supplied as necessary until the leak is isolated.

The makeup water can be supplied from the following systems:

- Demineralized water system (DWS) which supplies the demineralized water
- Primary makeup water system (PMWS) which supplies the deaerated water and primary makeup water
- Refueling water storage system (RWS) which supplies the refueling water

Deaerated water is used for initial filling of this system and demineralized water is used for automatic makeup when the tank water level reaches a low level setpoint.

If necessary, primary makeup water and refueling water may be used during an emergency. Refueling water storage pit is water source of seismic category I.

Water chemistry control of CCWS is performed by adding chemicals to the CCW surge tank to prevent long term corrosion that may degrade system performance. The CCW in the surge tank is covered with nitrogen gas to maintain water chemistry.

In order to provide redundancy for a passive failure (a loss of system integrity resulting in abnormal leakage), an internal partition plate is provided in the tank so that two separate maintained.

Each safety train has both supply and return header tie line isolation valves so that a single failure of one of the safety trains will not impact the other safety trains.

pacity of 50% is able to receive the amount of inleak from RCP sideration of isolation time. Regarding the makeup water source nic category I, this makeup water source provides capacity to akage for seven days. Makeup water supply is performed by an operator by locally operating the manual valves. A vacuum breaker is installed on the surge tank to prevent damaging the tank in the event of a sudden decrease in water level.

9.2.2.2.1.4 Piping

Carbon steel is used for the piping of the CCWS. Piping joints and connections are welded, except where flanged connections are required.

9.2.2.2.1.5 Valves

(Supply valves NCS-MOV-020A/B/C/D and Return valves NCS-MOV-007A/B/C/D)

- **Header tie line isolation valve**

The function of this motor operated valve is to separate each subsystem into two independent trains during abnormal and accident conditions. This ensures each safety train is isolated from ~~any~~ potential passive failure in the non-safety portion or another safety train of the CCWS. ~~This valve automatically closes at once upon the following signals:~~

a

This valve is operated from the MCR when an operator determines that train separation is required.

- ~~Low- low water level signal of a CCW surge tank~~
- ~~ECCS actuation signal and under voltage signal~~
- ~~Containment Spray signal~~

Header isolation meets the single failure criteria by incorporating two header tie line isolation valves. The ~~header isolation valves are designed to close within 30 seconds upon a S+UV signal, P signal, or surge tank water low-low level. Then, in order to resume supply of the cooling water to the RCP thermal barrier heat exchanger and the spent fuel pit heat exchanger, the isolation signal can be bypassed and the isolation valves respond. In addition, the~~ header isolation valves are ~~opened in order to~~ supply cooling water to A, B, A1 and A2 trains (or C, D, C1 and C2 trains) by one CCW pump during normal operation.

open

- **Containment Spray/Residual Heat Removal Heat Exchanger (CS/RHRS HX) CCW Outlet Valve**

The CCW which is suppl e CCW outlet isolation valve during sta valve automatically opens at o e train CCW pump start signal to esta nger.

In the event of an accident, the header tie line valves are closed by operator action from the MCR to achieve independence between trains. MOV-007A and MOV-020A (or MOV-007B and MOV-020B) will be closed for Subsystem A. Conversely, MOV-007C and MOV-020C (or MOV-007D and MOV-020D) will be closed for Subsystem B. The header isolation valves are designed to close within 30 seconds, but shall not close so rapidly that water hammer would occur.

- **RCP Thermal Barri**

Two motor operated valv al barrier Hx and close automatically n the event of in-leakage from the RCS n-leakage from further contaminating the CCWS.

- **CCW Surge Tank Vent Valve and Relief Valve**

The surge tank vent valve opens upon CCW surge tank high pressure and this valve closes when the radiation monitor level exceeds its set point. The surge tank relief valve provides surge tank overpressure protection.

- **Other Relief Valve**

Other relief valves are provided to relieve the pressure buildup caused by potential thermal expansion when equipment is isolated.

- **Containment Isolation Valve**

Containment isolation valves are installed on CCW lines penetrating containment as described in Subsection 6.2.4.

- **Isolation valve between seismic category I portion and non-seismic category I portion**

The CCW system supplies cooling water to components located in the non-seismic Category I buildings (turbine building and auxiliary building). Each CCW supply line (A2

9.2.2.5 Instrumentation Requirements

9.2.2.5.1 CCW supply header pressure

CCW header pressure is indicated in the MCR. When the pressure decreases due to the failure or inadvertent shutdown of the operating pump or valve misalignment, an alarm is transmitted to the MCR and the standby pump is started.

9.2.2.5.2 CCW radiation monitor

Radiation monitors are located downstream of the supply headers and the signal is indicated in the MCR. When the signal exceeds the setpoint, an alarm is transmitted and the CCW surge tank vent valve is closed.

9.2.2.5.3 CCW supply header flow rate

The CCW supply header flow rates are indicated in the MCR.

9.2.2.5.4 CCW surge tank water level

The CCW surge tank water level is indicated in the MCR. If CCWS in-leakage or out-leakage occurs, a high or low water level alarm is transmitted to the MCR.

A low-low water level signal isolates the components located in the non-seismic category I buildings. ~~In addition, the isolation valves on the header tie line are closed by a low-low water level signal and the subsystem, where the low-low water level signal is actuated, is divided into two independent trains for each train to supply the respective loop.~~

9.2.2.5.5 RCP thermal barrier HX and RCP motor cooling water flow rate

Reactor coolant pump thermal barrier HX and motor cooling water flow rate is indicated in the MCR. If the flow rate drops to its low flow setpoint, a low flow alarm is transmitted to the MCR. A high flow alarm, resulting from the in-leakage of reactor coolant to CCWS due to the reactor coolant pump thermal barrier HX tube leak, is transmitted to the MCR when the flow rate becomes about 1.5 times as large as the normal flow rate, and the isolation valves located at cooling water return line are closed.

9.2.2.5.6 CCW surge tank pressure

The CCW surge tank pressure is locally indicated. The surge tank nitrogen cover gas supply valve and tank vent valve are controlled with open-closed control so that the tank pressures are maintained within a pre-set range. High and low surge tank pressures are alarmed in the MCR.

9.2.2.5.7 CCWP discharge and suction pressure

The CCW pump discharge and suction pressures are locally indicated and are used for CCW pump performance testing.

Table 19.1-119 Key Insights and Assumptions (Sheet 22 of 46)

Key Insights and Assumptions	Dispositions
12. In the case of loss of secondary side cooling function by emergency feedwater system in transient events including turbine trip, load loss event etc., with emergency feedwater pump flow rate, operators start to recover main feedwater system in order to maintain secondary side cooling.	19.2.5 COL 19.3(6) COL 13.5(6)
13. In the case of loss of SI injection function entirely in LOCA event, with SI flow rate and RCS temperature indication, operators provide secondary side cooling to reduce RCS pressure and temperature by opening the main steam depressurization valves manually and supplying water from the emergency feedwater system in order to enable low pressure injection with containment spray system / residual heat removal system.	19.2.5 COL 19.3(6) COL 13.5(6)
14. In the case of loss of containment spray system function, alternate containment cooling operation is implemented utilizing CV natural recirculation in order to remove heat from CV. This preparation contains CCW pressurization with N2 gas, disconnection heat load of non-safety chiller and CRDM etc. and connection to containment fan cooler units. This operation is implemented when the containment pressure reaches the design pressure.	19.2.5 COL 19.3(6) COL 13.5(6)
15. In the case of leakage of the RWSP water from HHIS piping, CSS/RHRS piping or refueling water storage system piping, with drain sump water level – abnormally high, operators close the RWSP suction isolation valves respectively in order to prevent leakage of RWSP water from failed piping.	19.2.5 COL 19.3(6) COL 13.5(6)
16. When the containment isolation signal fail to automatically actuate, with CV pressure abnormally high signal, operators manually actuate the containment isolation signal in order to remove heat from the containment vessel.	19.2.5 COL 19.3(6) COL 13.5(6)
~~17. When the CCW header tie-line isolation valves fail to automatically close with specific signals which contain ECCS actuation signal plus under-voltage signal, containment spray signal, and surge tank level low signal, operators manually close these valves in order to separate CCW header.~~	~~19.2.5~~ ~~COL 19.3(6)~~ ~~COL 13.5(5)~~
18. RCS is depressurized through operating the depressurization valve after onset of core damage and before reactor vessel breach. This operation prevents events due to high pressure melt ejection.	19.2.5 COL 19.3(6) COL 13.5(5)
19. Operation of firewater injection to reactor cavity is implemented to flood reactor cavity in case of containment spray system failure, after onset of core damage and before reactor vessel breach.	19.2.5 COL 19.3(6) COL 13.5(6)

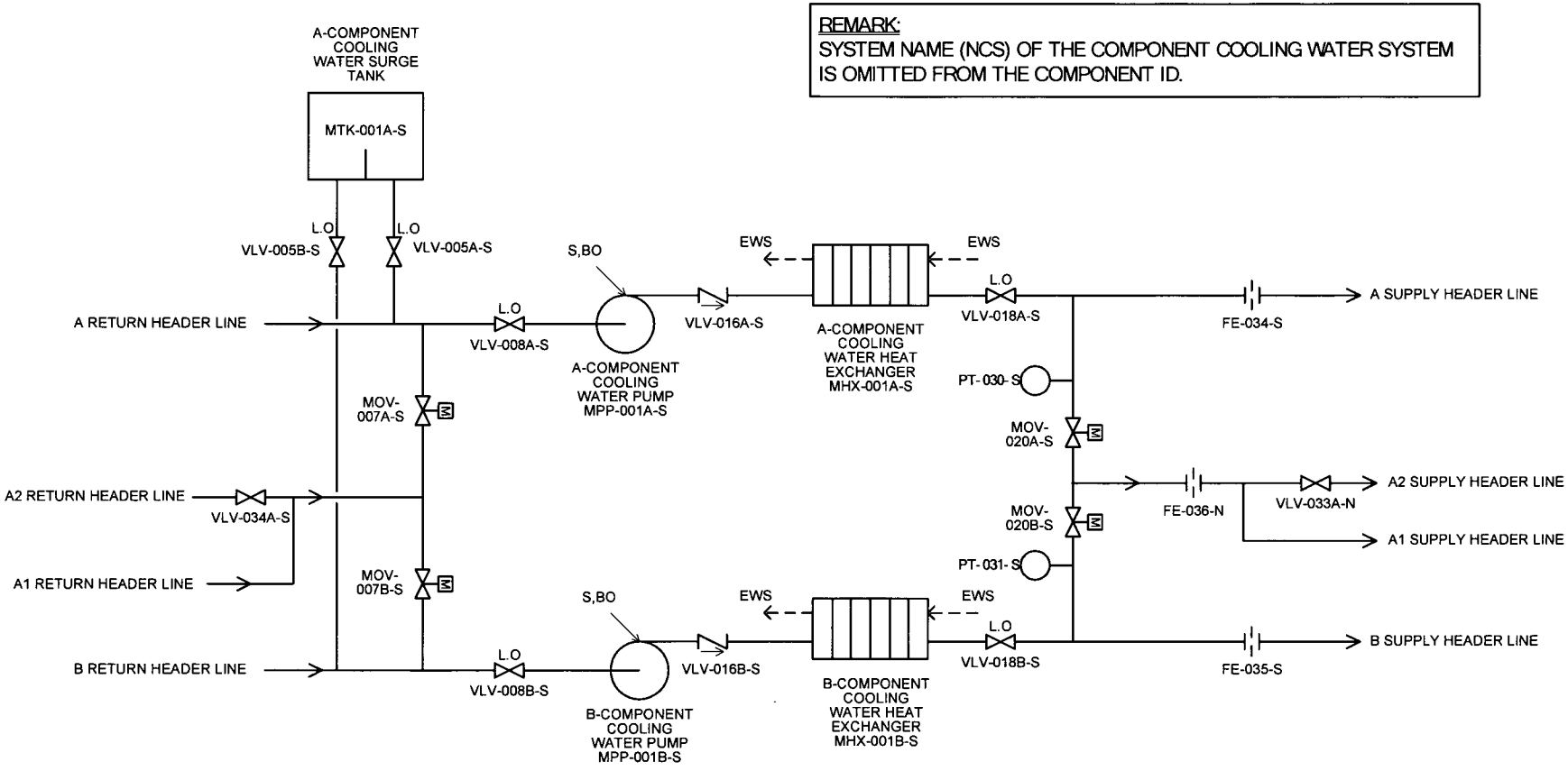

Figure 19.1-2 Simplified System Diagram (Sheet 14 of 42) (Component Cooling Water System [1 of 5])

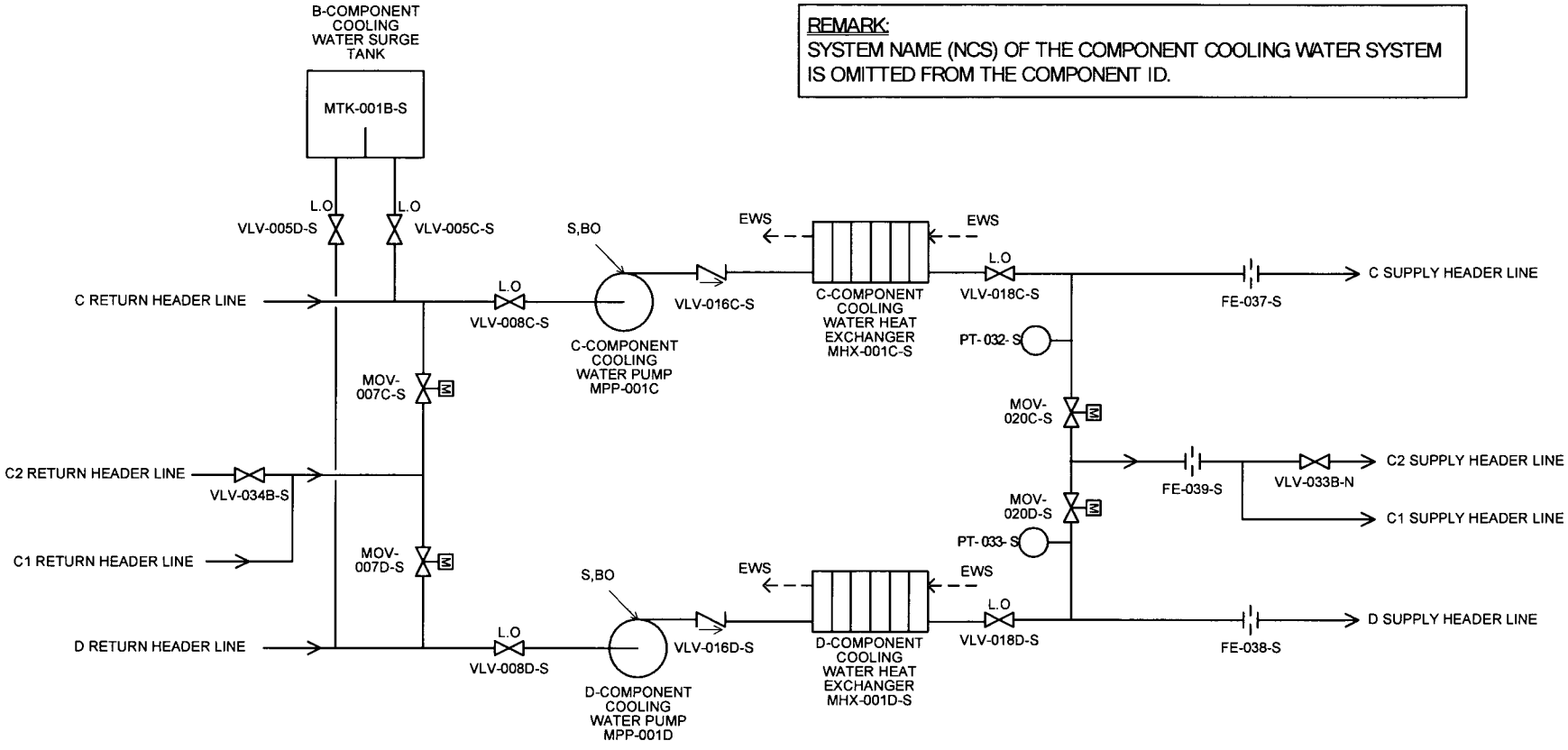

Figure 19.1-2 Simplified System Diagram (Sheet 15 of 42) (Component Cooling Water System [2 of 5])

RESPONSE TO REQUEST FOR ADDITIONAL INFORMATION

7/29/2011

US-APWR Design Certification

Mitsubishi Heavy Industries

Docket No. 52-021

RAI NO.: **NO. 571-4365 REVISION 0**

SRP SECTION: **09.02.02 – REACTOR AUXILIARY COOLING WATER SYSTEM**

APPLICATION SECTION: **9.2.2**

DATE OF RAI ISSUE: **4/13/2010**

QUESTION NO.: 09.02.02-49
Follow-up to RAI 362-2278, question 09.02.02-25

Based on the staff's review of the applicant's response to RAI 09.02.02-25, the following items should be addressed related to Question 2 in the original RAI:

- Table 3.9-14, "Valve Inservice Test Requirements," should be modified to address the safety-related mission and the leak rate testing for 14 valves that automatically close on a sensed low-low surge tank level to preserve the function of the CCWS after a seismic event that breaches the non-safety piping system.
- Where specific leakage criteria are not identified, the staff noted that the application of criteria from ASME OM Code, subparagraph ISTC-3630(e) could result in leakage as high as 18.9 liters per minute (5 gpm) for each closed valve (0.5 x diameter gal/min or 5 gpm for 10" diameter or larger). Since leakage testing is not required, the applicant should provide a detailed description of emergency makeup flow rate capacity to the surge tanks.

Reference: MHI's Responses to US-APWR DCD RAI No. 362-2278; MHI Ref: UAP-HF-09333; dated June 19, 2009; ML091760624.

ANSWER:

First Bullet: The isolation valve configuration that was the basis of the response to Question 09.02.02-25 has been changed. There are now four valves that automatically close on a sensed low-low surge tank level; specifically, isolation valves NCS-AOV-057A/B and 058A/B, which are located at the boundary with the non-safety piping. Table 3.9-14, "Valve Inservice Test Requirements," will be revised to include these AOVs and address the safety-related mission of these valves as "maintain close" and "transfer close". The design of these valves will specify a low leak rate and associated testing requirement. The IST requirements of the valves will be reflected in Table 3.9-14. Component classification of the valves will be reflected in the Table 3.2-2. The revision to Figure 9.2.2-1 provided in the response to Q9.2.2-69 reflects the revised isolation configuration. Corresponding Tier 1 tables and figures will be revised to be consistent with the Tier 2 information.

As indicated in the response to Question 09.02.02-48, the header tie line isolation valves (NCS-MOV-007 A/B/C/D and 020A/B/C/D) will no longer be closed on surge tank low-low water level. However, isolation of non-safety piping has been modified in response to other questions. The attached Table 9.2.2-49-1

provides the valves that will be used to isolate non-safety piping after a seismic event. DCD Tier 2 Table 3.9-14 will be modified to include all of the valves in the attached Table 9.2.2-49-1.

Second Bullet:
Based on criteria from MSS-SP-61-1999 (Manufacturers Standardization Society SP-61-1999, "Pressure Testing of Steel Valves", projected seat potential leakage rates through valves that isolate the safety from non-safety piping are provided in the attached Table 9.2.2-49-1. Each leakage pathway from the safety to non-safety piping has double-barrier isolation.

- 12-inch NCS-AOV-057A and 058A, in series, which isolate the A2 CCWS supply header to the non-safety piping,
- 12 inch check NCS-VLV-036A and 037A, in series, which isolate the A2 CCWS return header from the non-safety piping,
- 10-inch NCS-AOV-057B and 058B, in series, which isolate the C2 CCWS supply header to the non-safety piping,
- 10- inch check NCS-VLV-036B and 037B, in series, which isolate the C2 CCWS return header from the non-safety piping,
- 3-inch valves NCS-MOV-321A and 322A, in series, which isolate the A1 CCWS supply header from the FSS,
- 3-inch valves NCS-MOV-324A and 325A, in series, which isolate the A1 CCWS return header from the FSS,
- 3-inch valves NCS-MOV-321B and 322B, in series, which isolate the C1 CCWS supply header from the FSS,
- 3-inch valves NCS-MOV-324B and 325B, in series, which isolate the C1 CCWS return header from the FSS,
- 3-inch valves NCS-MOV-323A and 322A, in series, which isolate the A1 CCWS supply header from the Non-Essential Chilled Water System,
- 3-inch valves NCS-MOV-324A and 326A, in series, which isolate the A1 CCWS return header from the Non-Essential Chilled Water System,
- 3-inch valves NCS-MOV-323B and 322B, in series, which isolate the C1 CCWS supply header from the Non-Essential Chilled Water System,
- 3-inch valves NCS-MOV-324B and 326B, in series, which isolate the C1 CCWS return header from the Non-Essential Chilled Water System,
- 10-inch valves NCS-MOV-241 (into Chilled Water System)
- 10-inch valves NCS-MOV-242 (into Chilled Water System)

The design flow rate of surge tank make-up water is 75 gpm, which is more than adequate to compensate for the worst case seat leakage, which assumes simultaneous leakage of all leakage pathways at the boundary with the non-seismic category piping. Such a condition would result in total seat leak rate of less than 0.002 gpm for each CCWS subsystem, or potential total leakage through each CCWS subsystem (two trains) over a 7-day period of less than 25 gallons as shown in the attached Table 9.2.2-49-1. Packing leakage is assumed to be small in comparison to potential seat leakage because of the valve design. Pump seal leakage per the design specification of 3 cc/hr/seal (two seals per pump) results in a leakage rate of 5.3×10^{-5} gpm. A value of 50 gallons per CCWS subsystem (two trains) over a 7-day period is conservatively used to account for boundary seat leakage, packing leakage and pump seal leakage. Using this value, makeup to the CCWS surge tank is not required for at least 7 days after a seismic event. Note that the DCD will also be modified to indicate that the makeup rate is also sufficient to compensate for a potential CCWS seal failure.

A Technical Specification will be added to assure that an adequate CCWS surge tank water volume is available at the start of a postulated accident so that makeup is not required for at least 7 days. The Technical Specification value is conservatively determined by considering the surge tank water volume between the low-low level setpoint and the instrument zero level; the volume in this region exceeds 800 gallons. Based on this volume, the Technical Specification will conservatively apply a surveillance requirement of three gallons per hour during the operating cycle; such a leak rate would be detectable, but would not result in the need for tank makeup for at least 7 days. The instrument zero level is above

the pump suction nozzle elevation used for CCWS pump NPSH calculations; the low-low level setpoint is below the normal operating level of the surge tank. The Technical Specification will also include a 24 month requirement to leak test CCWS isolation boundaries that cannot be tested at power. See the response to Question 9.2.2-57 for information on surge tank level monitoring.

DCD Tier 2 Subsection 9.2.2.3.2 will be modified to provide the makeup capacity and the total potential leakage over a 7-day period. DCD Tier 2 Subsection 9.2.2.2.1.3 will be modified to provide the CCWS available surge tank compartment water volume remaining after the low-low level setpoint is reached. This volume significantly exceeds the potential CCWS surge tank compartment leakage over a 7-day period after a seismic event. Further, because the CCWS pump NPSH calculations are conservatively based on a CCWS surge tank level at the piping connection, adequate NPSH is assured. Thus, DCD Tier 2 Subsection 9.2.2.3.2 will be modified to indicate that the CCWS surge tanks have adequate capacity to accommodate potential leakage after a seismic event without degradation of system function.

As indicated in DCD Tier 2 Subsection 9.5.1, seismic design requirements are applied to portions of the system located in areas containing equipment required for safe-shutdown following a safe-shutdown earthquake (SSE). These requirements will apply to the FSS connection used for CCWS surge tank makeup.

Impact on DCD

DCD Tier 1 will be revised as follows:

- Subsection 2.7.3.3.1 to add Design Commitment of 7 days without surge tank makeup
- Table 2.7.3.3-1: reflect revised valve isolation component location.
- Table 2.7.3.3-3: reflect revised piping characteristics.
- Table 2.7.3.3-5: add Design Commitment of 7 days without surge tank makeup
- Figure 2.7.3.3-1: reflect revised valve isolation configuration for non-safety piping.
- Figure 2.7.3.3-1: reflect revised surge tank design.

DCD Tier 2 Table 3.2-2 will be revised as follows:

- Update to reflect revised valve isolation configuration for non-safety piping.

DCD Tier 2 Table 3.9-14 will be revised as follows:

- "Valve/ Actuator Type", "Inservice Testing Type and Frequency" and "IST Notes" will be updated to reflect valves used to isolate safety-related piping from other parts of the system. Update to Table 3.9-14 for the "300" series valves as well as NCS-MOV-241, NCS-MOV-242, has been provided via the response to RAI 697-5502 (Q9.2.2-80), submitted to the NRC 12 May 2011 via UAP-HF-11133. This RAI response includes the DCD markup for NCS-VLV-036A/B, NCS-VLV-037A/B, NCS-AOV-057A/B and NCS-AOV-058A/B.
- Modify IST requirements for header tie line isolation valves (NCS-MOV-007 A/B/C/D and 020A/B/C/D)

DCD Tier 2 Subsection 9.2.2.3.2 will be revised as follows:

- Reflect elimination of header tie line isolation valve on low-low surge tank level
- Reflect that makeup capacity exceeds potential leak rate from all valves used to isolate non-safety piping
- Reflect that makeup capacity exceeds potential leak rate from CCWS seal failure
- Reflect that surge tank makeup is not required for at least 7-days
- Add statement regarding potential pump seal leakage
- Add statement that the CCWS surge tanks have adequate capacity to accommodate potential

leakage after a seismic event without degradation of system function.

- Delete reference to RWSP as potential source for surge tank makeup.
- Add reference to FSS as potential source for surge tank makeup.
- Add discussion supporting Technical Specification leak rate.

DCD Tier 2 Subsection 9.2.2.2.1.3 will be revised as follows:

- Address CCWS tank capacity with respect to 7-day leakage.
- Modify description for consistency with surge tank design change

DCD Tier 2 Chapter 16, Technical Specification 3.7.7 will be revised as follows:

- Add Surveillance Requirement and associated Bases to verify system leakage.

Impact on R-COLA
There is no impact on the R-COLA.

Impact on S-COLA
There is no impact on the S-COLA.

Impact on PRA
There is no impact on the PRA.

Table 9.2.2-49-1 Leakage Rates through Valves Isolating CCWS Seismic I from Non-seismic Piping

		Size	Potential leakage path through redundant valves in series		Valve type	Leakage							
						ml/h/inch (Note1)	gpm/inch	gpm	gpm (Total per Subsystem)	gallon per hour	gallon per day	gallon per 7 days	gallon per 30 days
Train A and B	A1 header	3B (Supply)	NCS-MOV-321A	NCS-MOV-322A	gate	10.0	4.5E-05	1.4E-04	1.7E-03	1.1E-01	2.45	17.14	73.44
		3B (Return)	NCS-MOV-324A	NCS-MOV-325A	gate			1.4E-04					
		3B (Supply)	NCS-MOV-323A	NCS-MOV-322A	gate			1.4E-04					
		3B (Return)	NCS-MOV-324A	NCS-MOV-326A	gate			1.4E-04					
	A2 header	12B (Supply)	NCS-AOV-057A	NCS-AOV-058A	butterfly			5.4E-04					
		12B (Return)	NCS-VLV-036A	NCS-VLV-037A	check			5.4E-04					
Train C and D	C1 header	3B (Supply)	NCS-MOV-321B	NCS-MOV-322B	gate			1.4E-04	2.4E-03	1.5E-01	3.46	24.20	103.68
		3B (Return)	NCS-MOV-324B	NCS-MOV-325B	gate			1.4E-04					
		3B (Supply)	NCS-MOV-323B	NCS-MOV-322B	gate			1.4E-04					
		3B (Return)	NCS-MOV-324B	NCS-MOV-326B	gate			1.4E-04					
		10B (Supply)	NCS-MOV-241	– (Note2)	gate			4.5E-04					
		10B (Return)	NCS-MOV-242	– (Note2)	gate			4.5E-04					
	C2 header	10B (Supply)	NCS-AOV-057B	NCS-AOV-058B	butterfly			4.5E-04					
		10B (Return)	NCS-VLV-036B	NCS-VLV-037B	check			4.5E-04					

Note 1: Leak rate based on Subsection 5.7.1 of Manufacturers Standardization Society (MSS) SP-61-1999, "Pressure Testing of Steel Valves", 1999.
Note 2: NCS-MOV-241 and 242 are locked closed.

3.a Pressure boundary welds in ASME Code Section III components, identified in Table 2.7.3.3-2, meet ASME Code Section III requirements for non-destructive examination of welds.

3.b Pressure boundary welds in ASME Code Section III piping, identified in Table 2.7.3.3-3, meet ASME Code Section III requirements for non-destructive examination of welds.

4.a The ASME Code Section III components, identified in Table 2.7.3.3-2, retain their pressure boundary integrity at their design pressure.

4.b The ASME Code Section III piping, identified in Table 2.7.3.3-3, retains its pressure boundary integrity at its design pressure.

5.a The seismic Category I equipment identified in Table 2.7.3.3-2 can withstand seismic design basis loads without loss of safety function.

5.b The seismic Category I piping, including supports, identified in Table 2.7.3.3-3 can withstand seismic design basis loads without a loss of its safety function.

6.a The Class 1E equipment identified in Table 2.7.3.3-2 as being qualified for a harsh environment can withstand the environmental conditions that would exist before, during, and following a design basis accident without loss of safety function for the time required to perform the safety function.

6.b Class 1E equipment identified in Table 2.7.3.3-2 is powered from its respective Class 1E division.

6.c Separation is provided between redundant divisions of CCWS Class 1E cables, and between Class 1E cables and non-Class 1E cables.

7. The CCWS removes heat from various components during all plant operating conditions, including normal plant operating, ~~abnormal and accident conditions.~~

8.a Controls are provided in the MCR to open and close the remotely operated valves identified in Table 2.7.3.3-2.

8.b The valves identified in Table 2.7.3.3-2 as having PSMS control perform an active safety function after receiving a signal from PSMS.

9.a The remotely operated valves and check valves, identified in Table 2.7.3.3-2, perform an active safety function to ~~change position as in~~ **abnormal, and accident conditions for at least 7 days without surge tank makeup.**

9.b After loss of motive power, the remotely operated valves, 2, assume the indicated loss of motive power position.

10.a Controls are provided in the MCR to start and stop the CCW pumps identified in Table 2.7.3.3-4.

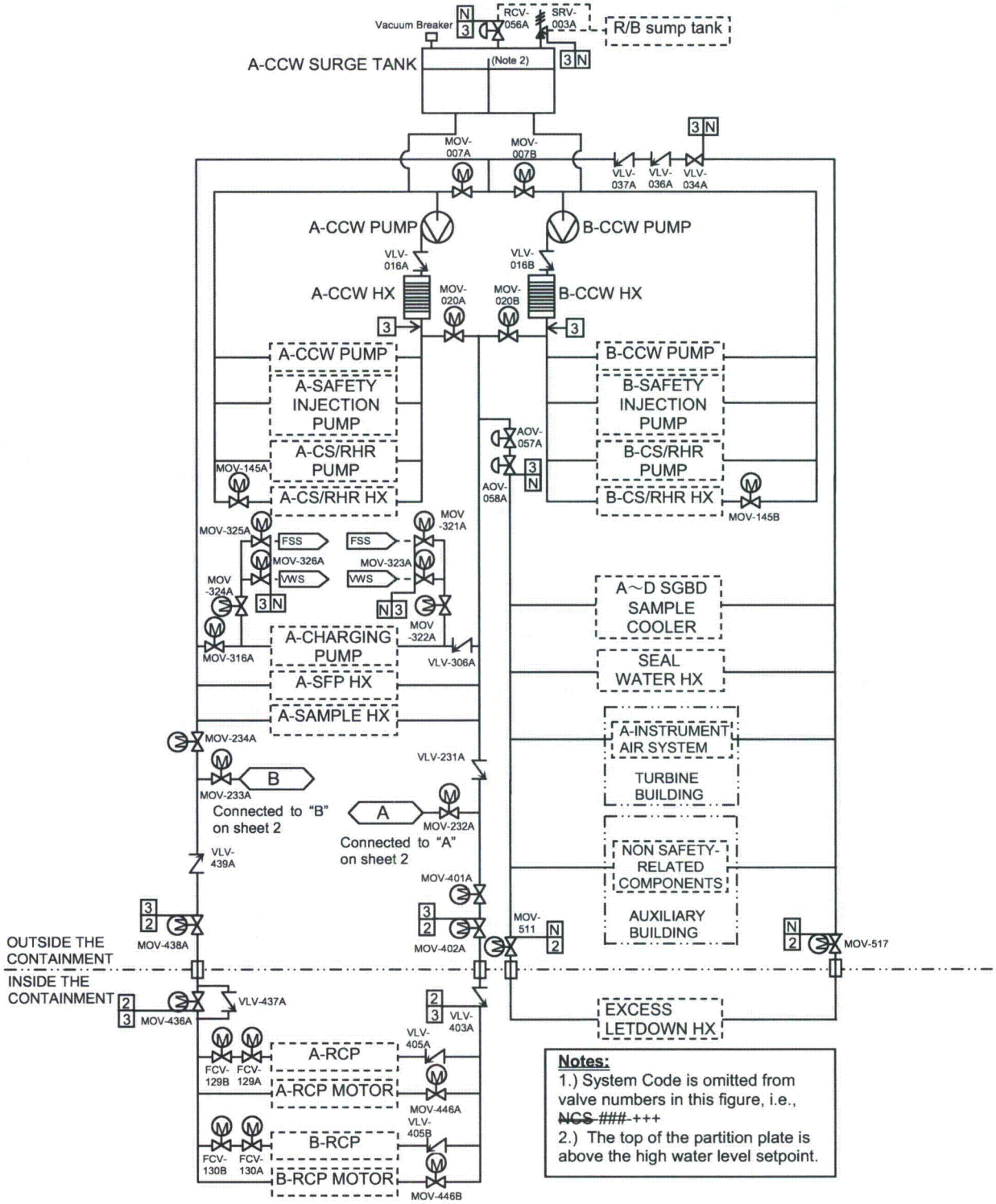

Figure 2.7.3.3-1 Component Cooling Water System (Sheet 1 of 2)

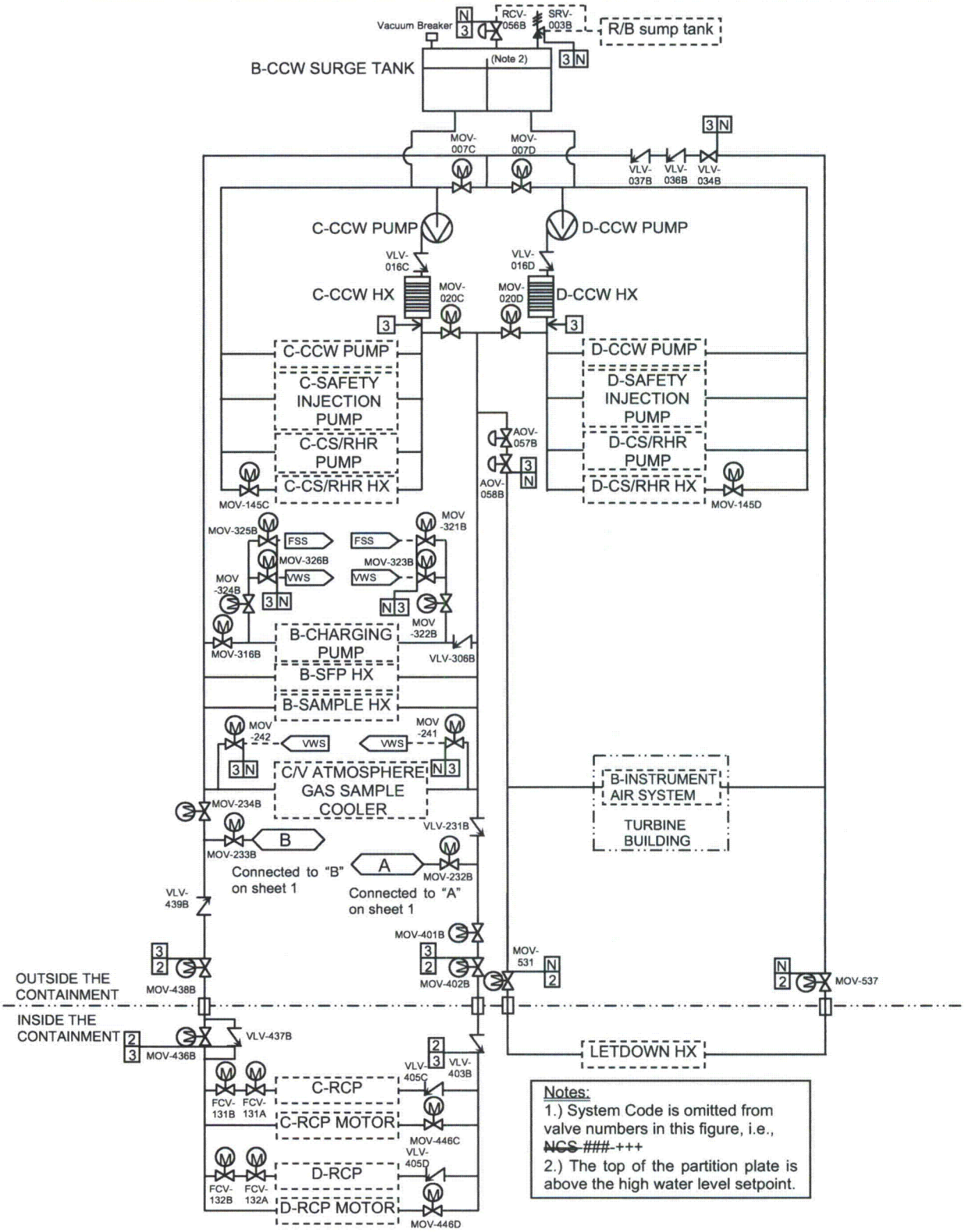

Figure 2.7.3.3-1 Component Cooling Water System (Sheet 2 of 2)

Table 2.7.3.3-1 Component Cooling Water System Location of Equipment and Piping (Sheet 1 of 2)

System and Components	Location
Component cooling water heat exchangers	Reactor Building
Component cooling water pumps	Reactor Building
Component cooling water surge tank	Reactor Building
Component cooling water supply, return lines piping and valves excluding the following; Component cooling water system containment isolation valves and piping between the valves AOV-058 NCS-VLV- Component cooling water supply, return lines piping and valves between and excluding the valves NCS-~~VLV-033~~A and 034A	Reactor Building
Component cooling water supply, return lines piping and valves excluding the following; Component cooling water system containment isolation valves and piping between the valves AOV-058 NCS-VLV- Component cooling water supply, return lines piping and valves between and excluding the valves NCS-~~VLV-033~~B and 034B	Reactor Building
Component cooling water supply, return lines piping and valves between and excluding the valves NCS-~~VLV-033~~A and 034A, excluding the following; Component cooling water system containment isolation valves and piping between the valves AOV-058 NCS-VLV- excluding VLV excluding Component cooling water system piping and valves between and ~~including~~ the valve NCS-~~AOV-~~661A and NCS-VLV-~~671~~A VLV 669 Component cooling water system piping and valves between and ~~including~~ the valve NCS-~~AOV-~~601 and NCS-VLV-~~653~~ 651	Reactor Building
Component cooling water supply, return lines piping and valves between and excluding the valves NCS-~~VLV-033~~B and 034B, excluding the following; Component cooling water system containment isolation valves and ~~piping~~ between AOV-058 VLV NCS-VLV- 669 excluding Component cooling water system piping and valves between and ~~including~~ the valve NCS-~~AOV-~~661B and NCS-VLV-~~671~~B	Reactor Building
Component cooling water system piping and valves related to the excess letdown heat exchanger inside containment between and including the valves NCS-MOV-511,517, SRV-513	Containment Reactor Building
Component cooling water system piping and valves related to the letdown heat exchanger inside containment between and including the valves NCS-MOV-531,537, SRV-533	Containment Reactor Building
Component cooling water system piping and valves between and including the containment isolation valves NCS-MOV-402A,436A,438A,445A,447A,448A and NCS-VLV-403A,437A	Containment Reactor Building

Table 2.7.3.3-1 Component Cooling Water System Location of Equipment and Piping (Sheet 2 of 2)

System and Components	Location
Component cooling water piping and valves between and including the containment isolation valves NCS-MOV-402B,436B,438B,445B,447B,448B and ~~NCS-VLV-403B,437B~~ stop	Containment Reactor Building
Component cooling water system piping and valves related to components installed in A/B from and excluding ~~isolation~~ valve NCS-~~AOV-602~~ VLV-601 up to and excluding stop valve NCS-VLV-651 stop	Auxiliary Building Reactor Building
Component cooling water system piping and valves related to components installed in T/B from and excluding ~~isolation~~ valves NCS-~~AOV-662~~A,B VLV-661 up to and excluding stop valves NCS-VLV-669A,B	Turbine Building Reactor Building
Component cooling water system piping and valves related to reactor coolant pumps between the containment isolation valves NCS-MOV-436A,447A (excluding) and NCS-VLV-403A,437A (excluding) and the valves NCS-SRV-406A,B,435A (including)	Containment
Component cooling water system piping and valves related to reactor coolant pumps between the containment isolation valves NCS-MOV-436B,447B (excluding) and NCS-VLV-403B,437B (excluding) and the valves NCS-SRV-406C,D,435B (including)	Containment
~~Component cooling water system piping and valves between and including the valves NCS-AOV-601 and 602~~	~~Reactor Building~~
~~Component cooling water system piping and valves between and including the valves NCS-VLV-651 and 653~~	~~Reactor Building~~
~~Component cooling water system piping and valves between and including the valves NCS-AOV-661A,B and 662A,B~~	~~Reactor Building~~
~~Component cooling water system piping and valves between and including the valves NCS-VLV-669A,B and 671A,B~~	~~Reactor Building~~
Component cooling water surge tank surge line piping	Reactor Building

Table 2.7.3.3-3 Component Cooling Water System Piping Characteristics (Sheet 1 of 2)

Pipe Line Name	ASME Code Section III Class	Seismic Category I
Component cooling water supply, return lines piping and valves excluding the following; Component cooling water system containment isolation valves and piping between the valves AOV-058 NCS-VLV- Component cooling water supply, return lines piping and valves between and excluding the valves NCS-~~VLV-033~~A and 034A	3	Yes
Component cooling water supply, return lines piping and valves excluding the following; Component cooling water system containment isolation valves and piping between the valves AOV-058 NCS-VLV- Component cooling water supply, return lines piping and valves between and excluding the valves NCS-~~VLV-033~~B and 034B	3	Yes
Component cooling water supply, return lines piping and valves between and excluding the valves NCS-~~VLV-033~~A and 034A, excluding the following; AOV-058 NCS-VLV- Component cooling water system containment isolation valves and piping between the valves ~~Component cooling water system piping and valves between and including the valve NCS-AOV-661A and NCS-VLV-671A~~ ~~Component cooling water system piping and valves between and including the valve NCS-AOV-601 and NCS-VLV-653~~	-	No
Component cooling water supply, return lines piping and valves between and excluding the valves NCS-~~VLV-033~~B and 034B, excluding the following; AOV-058 NCS-VLV- Component cooling water system containment isolation valves and piping between the valves ~~Component cooling water system piping and valves between and including the valve NCS-AOV-661B and NCS-VLV-671B~~	-	No
Component cooling water system piping and valves related to the excess letdown heat exchanger inside containment between and including the valves NCS-MOV-511,517, SRV-513	2	Yes
Component cooling water system piping and valves related to the letdown heat exchanger inside containment between and including the valves NCS-MOV-531,537, SRV-533	2	Yes
Component cooling water system piping and valves between and including the containment isolation valves NCS-MOV-402A,436A,438A,445A,447A,448A and NCS-VLV-403A,437A	2	Yes

Table 2.7.3.3-3 Component Cooling Water System Piping Characteristics (Sheet 2 of 2)

Pipe Line Name	ASME Code Section III Class	Seismic Category I
Component cooling water piping and valves between and including the containment isolation valves NCS-MOV-402B,436B,438B,445B,447B,448B and NCS-VLV-403B,437B	2	Yes
~~Component cooling water system piping and valves related to components installed in A/B from and excluding isolation valve NCS-AOV-602 up to and excluding stop valve NCS-VLV-651~~	~~-~~	~~No~~
~~Component cooling water system piping and valves related to components installed in T/B from and excluding isolation valves NCS-AOV-662A,B up to and excluding stop valves NCS-VLV-669A,B~~	~~-~~	~~No~~
Component cooling water system piping and valves related to reactor coolant pumps between the containment isolation valves NCS-MOV-436A,447A (excluding) and NCS-VLV-403A,437A (excluding) and the valves NCS-SRV-406A,B,435A (including)	3	Yes
Component cooling water system piping and valves related to reactor coolant pumps between the containment isolation valves NCS-MOV-436B,447B (excluding) and NCS-VLV-403B,437B (excluding) and the valves NCS-SRV-406C,D,435B (including)	3	Yes
~~Component cooling water system piping and valves between and including the valves NCS-AOV-601 and 602~~	~~3~~	~~Yes~~
~~Component cooling water system piping and valves between and including the valves NCS-VLV-651 and 653~~	~~3~~	~~Yes~~
~~Component cooling water system piping and valves between and including the valves NCS-AOV-661A,B and 662A,B~~	~~3~~	~~Yes~~
~~Component cooling water system piping and valves between and including the valves NCS-VLV-669A,B and 671A,B~~	~~3~~	~~Yes~~
Component cooling water surge tank surge line piping	3	Yes

NOTE:
Dash (-) indicates not applicable

Table 2.7.3.3-5 Component Cooling Water System Inspections, Tests, Analyses, and Acceptance Criteria (Sheet 5 of 8)

Design Commitment	Inspections, Tests, Analyses	Acceptance Criteria
	6.a.ii Inspection will be performed of the as-built Class 1E equipment identified in Table 2.7.3.3-2 as being qualified for a harsh environment and the associated wiring, cables, and terminations located in a harsh environment.	6.a.ii The as-built Class 1E equipment and the associated wiring, cables, and terminations identified in Table 2.7.3.3-2 as being qualified for a harsh environment are bounded by type tests or a combination of type tests and analyses.
6.b Class 1E equipment, identified in Table 2.7.3.3-2, is powered from its respective Class 1E division.	6.b A test will be performed on each division of the as-built Class 1E equipment identified in Table 2.7.3.3-2 by providing a simulated test signal only in the Class 1E division under test.	6.b The simulated test signal exists at the as-built Class 1E equipment identified in Table 2.7.3.3-2 under test.
6.c Separation is provided between redundant divisions of CCWS Class 1E cables, and between Class 1E cables and non-Class 1E cables.	6.c Inspections of the as-built Class 1E divisional cables will be performed.	6.c Physical separation or electrical isolation is provided in accordance with RG 1.75, between the as-built cables of redundant Class 1E divisions and between Class 1E cables and non-Class 1E cables.
7. The CCWS removes heat from various components during all plant operating conditions, including normal plant operating, ~~abnormal and accident conditions.~~ **abnormal, and accident conditions for at least 7 days without surge tank makeup.**	7.i An analysis will be performed that determines the heat removal capability of the CCW heat exchangers.	7.i A report exists and concludes that the product of the overall heat transfer coefficient and the effective heat exchange area, UA, of each CCW heat exchanger identified in Table 2.7.3.3-2 is greater than or equal to 10.0×10^6 Btu/hr-°F.
	7.ii Tests will be performed to confirm that the as-built CCW pumps can provide flow to the CCW heat exchangers.	7.ii Each as-built CCW pump identified in Table 2.7.3.3-2 is capable of achieving its design flow rate of 11,000 gpm to each CCW heat exchanger in the same division.
	7.iii Inspections will be performed to confirm the as-built CCW surge tank volume.	7.iii The as-built CCW surge tank volume is greater than or equal to the design volume of 283 ft^3.

Table 3.2-2 Classification of Mechanical and Fluid Systems, Components, and Equipment (Sheet 21 of 56)

System and Components	Equipment Class	Location	Quality Group	10 CFR 50 Appendix B (Reference 3.2-8)	Codes and Standards(3)	Seismic Category(4)	Notes
9. Containment Spray System (CSS)							
Spray nozzles	2	PCCV	B	YES	2	I	
Containment spray system piping and valves	2	PCCV R/B	B	YES	2	I	
10. Post Accident pH Control System(PHS)							
NaTB baskets	2	PCCV	B	YES	5	I	
NaTB basket containers	2	PCCV	B	YES	2	I	
NaTB solution transfer piping	2	PCCV	B	YES	2	I	
11. Component Cooling Water System (CCWS)							
Component cooling water pumps	3	R/B	C	YES	3	I	
Component cooling water surge tanks	3	R/B	C	YES	3	I	
Component cooling water heat exchangers	3	R/B	C	YES	3	I	
Component cooling water supply/ return headers A, B ,A1 and A2 piping and valves excluding the following; Component cooling water system containment isolation valves and piping between these valves(1) Component cooling water supply/ return header A2 piping, in between but excluding the valves NCS-~~VLV-033~~A and 034A(2)	3	R/B	C	YES	3	I	1. Component cooling water system containment isolation valves and piping between these valves are Equipment Class 2, Quality Group B, Seismic Category I. 2. Valves NCS-~~VLV-033~~A and NCS-VLV-034A are Equipment Class 3, Quality Group C.

AOV-058

NCS-VLV-

AOV-058

Table 3.2-2 Classification of Mechanical and Fluid Systems, Components, and Equipment (Sheet 22 of 56)

System and Components	Equipment Class	Location	Quality Group	10 CFR 50 Appendix B (Reference 3.2-8)	Codes and Standards(3)	Seismic Category(4)	Notes
Component cooling water supply/ return headers C, D, C1 and C2 piping and valves excluding the following; Component cooling water system containment isolation valves and piping between these valves(3) Component cooling water supply/ return header C2 piping, in between but excluding the valves NCS-~~VLV-033~~B and ~~034~~B(4)	3	R/B	C	YES	3	I	3. Component cooling water system containment isolation valves and piping between these valves are Equipment Class 2, Quality Group B, Seismic Category I. 4. Valves NCS-~~VLV-033~~B and NCS-VLV-034B are Equipment Class 3, Quality Group C.
Component cooling water supply/ return header A2 piping and valves between and excluding the valves NCS-~~VLV-033~~A and 034A (excluding the valves), excluding the following; Component cooling water system containment isolation valves and piping between these valves(5) Component cooling water system piping and valves between these valves NCS-~~AOV-~~661A and NCS-~~VLV-671~~A (~~including~~ the valves)(6) Component cooling water system piping and valves between these valves NCS-~~AOV-~~601 and NCS-~~VLV-653~~ (~~including~~ the valves)(7)	4	R/B	D	N/A	4	II	5. Component cooling water system containment isolation valves and piping between these valves are Equipment Class 2, Quality Group B, Seismic Category I. 6. ~~Valves NCS-AOV-661A and NCS-VLV-671A are Equipment Class 3, Seismic Category I.~~ 7. ~~Valves NCS-AOV-601A and NCS-VLV-653 are Equipment Class 3, Quality Group 3, Seismic Category I.~~

AOV-058 NCS-VLV- AOV-058 NCS-VLV- AOV-058 VLV- excluding 669 651 VLV- excluding

Table 3.2-2 Classification of Mechanical and Fluid Systems, Components, and Equipment (Sheet 23 of 56)

NCS-VLV-

AOV-058

VLV-

669

excluding

System and Components	Equipment Class	Location	Quality Group	10 CFR 50 Appendix B (Reference 3.2-8)	Codes and Standards(3)	Seismic Category(4)	Notes
mponent cooling water supply/ return header C2 piping and valves between and excluding the valves NCS-~~VLV-033~~B and 034B (excluding the valves), excluding the following; Component cooling water system containment isolation valves and piping between these valves(8) Component cooling water system piping and valves between these valves NCS-~~AOV-~~661B and NCS-VLV-~~671B~~ (~~including~~ the valves)~~(9)~~	4	R/B	D	N/A	4	II	8. Component cooling water system containment isolation valves and piping between these valves are Equipment Class 2, Quality Group B, Seismic Category I. 9. ~~Valves NCS-AOV-661B and NCS-VLV-671B are Equipment Class 3, Seismic Category I.~~
Component cooling water system piping and valves related to the excess letdown heat exchanger inside containment between and including the valves NCS-MOV-511,517, SRV-513	2	PCCV, R/B	B	YES	2	I	
Component cooling water system piping and valves related to the letdown heat exchanger inside containment between and including the valves NCS-MOV-531,537, SRV-533	2	PCCV R/B	B	YES	2	I	
Component cooling water system piping and valves between and including the containment isolation valves NCS-MOV-402A,436A,438A,445A,447A,448A and NCS-VLV-403A,437A	2	PCCV R/B	B	YES	2	I	
Component cooling water piping and valves between and including the containment isolation valves NCS-MOV-402B,436B,438B,445B,447B,448B and NCS-VLV-403B,437B	2	PCCV R/B	B	YES	2	I	

Table 3.2-2 Classification of Mechanical and Fluid Systems, Components, and Equipment (Sheet 24 of 56)

System and Components	Equipment Class	Location	Quality Group	10 CFR 50 Appendix B (Reference 3.2-8)	Codes and Standards(3)	Seismic Category(4)	Notes
Component cooling water system piping and valves related to components installed in auxiliary building from and excluding ~~isolation~~ valve NCS-~~AOV-602~~ VLV-601 up to and excluding stop valve NCS-VLV-651	4	A/B R/B	D	N/A	4	NS	
Component cooling water system piping and valves related to components installed in turbine building from and excluding ~~isolation~~ valves NCS-~~AOV-662~~A,B up to and excluding stop valves NCS-VLV-669A,B	4	T/B R/B	D	N/A	4	NS	
Component cooling water system piping and valves related to reactor coolant pumps between the containment isolation valves NCS-MOV-436A,447A (excluding) and NCS-VLV-403A,437A (excluding) and the valves NCS-SRV-406A,B,435A (including)	3	PCCV	C	YES	3	I	
Component cooling water system piping and valves related to reactor coolant pumps between the containment isolation valves NCS-MOV-436B,447B (excluding) and NCS-VLV-403B,437B (excluding) and the valves NCS-SRV-406C,D,435B (including)	3	PCCV	C	YES	3	I	
~~Component cooling water system piping and valves between and including the valves NCS-AOV-601 and 602~~	~~3~~	~~R/B~~	~~C~~	~~YES~~	~~3~~	~~I~~	

stop

stop

VLV-661

Table 3.2-2 Classification of Mechanical and Fluid Systems, Components, and Equipment (Sheet 25 of 56)

System and Components	Equipment Class	Location	Quality Group	10 CFR 50 Appendix B (Reference 3.2-8)	Codes and Standards(3)	Seismic Category(4)	Notes
~~Component cooling water system piping and valves between and including the valves NCS-VLV-651 and 653~~	~~3~~	~~R/B~~	~~C~~	~~YES~~	~~3~~	~~I~~	
~~Component cooling water system piping and valves between and including the valves NCS-AOV-661A,B and 662A,B~~	~~3~~	~~R/B~~	~~C~~	~~YES~~	~~3~~	~~I~~	
~~Component cooling water system piping and valves between and including the valves NCS-VLV-669A,B and 671A,B~~	~~3~~	~~R/B~~	~~C~~	~~YES~~	~~3~~	~~I~~	
Component cooling water system Piping from component cooling water surge tank to and including the valve(NCS-SRV-003A,NCS-RCV-056A,NCS-PCV-012,NCS-VLV-045A,NCS-VLV-047A)	3	R/B	C	YES	3	I	
Component cooling water system Piping from component cooling water surge tank to and including the valve(NCS-SRV-003B,NCS-RCV-056B,NCS-PCV-022,NCS-VLV-045B,NCS-VLV-047B)	3	R/B	C	YES	3	I	
Component cooling water surge tank surge line piping	3	R/B	C	YES	3	I	
Makeup line piping and valves from and including the valves NCS-VLV-051A,B and 054A,B up to and excluding the valves NCS-LCV-010,020	4	R/B	D	N/A	4	II	
Makeup line piping and valves from and including the valves NCS-VLV-061A,B up to and excluding the valves NCS-VLV-062A,B	4	R/B	D	N/A	4	II	

Table 3.9-14 Valve Inservice Test Requirements (Sheet 58 of 112)

Valve Tag Number	Description	Valve/ Actuator Type	Safety-Related Missions	Safety Functions(2)	ASME IST Category	Inservice Testing Type and Frequency	IST Notes
CSS-VLV-005C	Containment spray header containment isolation	Check	Maintain Close Transfer Open Transfer Close	Active Containment Isolation	AC	Check Exercise /Refueling Outage	
CSS-VLV-005D	Containment spray header containment isolation	Check	Maintain Close Transfer Open Tra	Active Containment Isolation	AC	Check Exercise /Refueling Outage	
NCS-MOV-007A	Train return header separation	Remote MO Gate	Maintain Close Transfer Close Transfer Open Maintain Open	Active Remote Position	~~B~~	Remote Position Indication, Exercise/2 Years Exercise Full Stroke/ ~~Cold Shutdown~~ Operability Test	7
NCS-MOV-007B	Train return header separation	Remote MO Gate	Maintain Close Transfer Close Transfer Open Maintain Open	Active Remote Position	~~B~~	Remote Position Indication, Exercise/2 Years Exercise Full Stroke/ ~~Cold Shutdown~~ Operability Test	7
NCS-MOV-007C	Train return header separation	Remote MO Gate	Maintain Close Transfer Close Transfer Open Maintain Open	Active Remote Position	~~B~~	Remote Position Indication, Exercise/2 Years Exercise Full Stroke/ ~~Cold Shutdown~~ Operability Test	7
NCS-MOV-007D	Train return header separation	Remote MO Gate	Maintain Close Transfer Close Transfer Open Maintain Open	Active Remote Position	~~B~~	Remote Position Indication, Exercise/2 Years Exercise Full Stroke/ ~~Cold Shutdown~~ Operability Test	7

Safety Seat Leakage
A
Train separation portion Isolation Leak Test
Refueling Outage
Safety Seat Leakage
A
Train separation portion Isolation Leak Test
Refueling Outage
Safety Seat Leakage
A
Train separation portion Isolation Leak Test
Refueling Outage
Safety Seat Leakage
A
Train separation portion Isolation Leak Test
Refueling Outage

Table 3.9-14 Valve Inservice Test Requirements (Sheet 59 of 112)

Valve Tag Number	Description	Valve/ Actuator Type	Safety-Related	Safety Functions(2)	ASME IST Category	Inservice Testing Type and Frequency	IST Notes
NCS-MOV-020A	Train supply header separation	Remote MO Gate	Maintain Close Transfer Close Transfer Open Maintain Open	Active Remote Position	~~B~~	Remote Position Indication, Exercise/2 Years Exercise Full Stroke ~~Cold Shutdown~~ Operability Test	7
NCS-MOV-020B	Train supply header separation	Remote MO Gate	Maintain Close Transfer Close Transfer Open Maintain Open	Active Remote Position	~~B~~	Remote Position Indication, Exercise/2 Years Exercise Full Stroke/ ~~Cold Shutdown~~ Operability Test	7
NCS-MOV-020C	Train supply header separation	Remote MO Gate	Maintain Close Transfer Close Transfer Open Maintain Open	Active Remote Position	~~B~~	Remote Position Indication, Exercise/2 Years Exercise Full Stroke/ ~~Cold Shutdown~~ Operability Test	7
NCS-MOV-020D	Train supply header separation	Remote MO Gate	Maintain Close Transfer Close Transfer Open Maintain Open	Active Remote Position	~~B~~	Remote Position Indication, Exercise/2 Years Exercise Full Stroke/ ~~Cold Shutdown~~ Operability Test	7
NCS-MOV-145A	Containment spray/residual heat exchanger component cooling water isolation	Remote MO Gate	Maintain Close Transfer Open Transfer Close	Active Remote Position	B	Remote Position Indication, Exercise/2 Years Exercise Full Stroke/ Quarterly Operability Test	

Safety Seat Leakage
A
Train separation portion Isolation Leak Test
Refueling Outage

Table 3.9-14 Valve Inservice Test Requirements (Sheet 69 of 112)

Valve Tag Number	Description	Valve/ Actuator Type	Safety-Related Missions	Safety Functions(2)	ASME IST Category	Inservice Testing Type and Frequency	IST Notes
NCS-VLV-016A	Component cooling water pump discharge check	Check	Maintain Open Transfer Open Transfer Close	Active	BC	Check Exercise/ Refueling Outage	3
NCS-VLV-016B	Component cooling water pump discharge check	Check	Maintain Open Transfer Open Transfer Close	Active	BC	Check Exercise/ Refueling Outage	3
NCS-VLV-016C	Component cooling water pump discharge check	Check	Maintain Open Transfer Open Transfer Close	Active	BC	Check Exercise/ Refueling Outage	3
NCS-VLV-016D	Component cooling water Pump discharge check	Check	Maintain Open Transfer Open Transfer Close	Active	BC	Check Exercise/ Refueling Outage	3
~~NCS-AOV-601~~	~~Auxiliary building component cooling water supply header isolation~~	~~Remote AO Butterfly~~	~~Maintain Close~~ ~~Transfer Close~~	~~Active to Failed Remote Position~~	~~B~~	~~Remote Position Indication, Exercise/2 Years~~ ~~Exercise Full Stroke/ Cold Shutdown Operability Test~~	~~6~~
~~NCS-AOV-602~~	~~Auxiliary building component cooling water supply header isolation~~	~~Remote AO Butterfly~~	~~Maintain Close~~ ~~Transfer Close~~	~~Active to Failed Remote Position~~	~~B~~	~~Remote Position Indication, Exercise/2 Years~~ ~~Exercise Full Stroke/ Cold Shutdown Operability Test~~	~~6~~

Table 3.9-14 Valve Inservice Test Requirements (Sheet 70 of 112)

Valve Tag Number	Description	Valve/ Actuator Type	Safety-Related Missions	Safety Functions(2)	ASME IST Category	Inservice Testing Type and Frequency	IST Notes
~~NCS-VLV-652~~	~~Auxiliary building component cooling water return header check~~	~~Check~~	~~Maintain Close Transfer Close~~	~~Active~~	~~BC~~	~~Check Exercise/ Refueling Outage~~	~~3~~
~~NCS-VLV-653~~	~~Auxiliary building component cooling water return header check~~	~~Check~~	~~Maintain Close Transfer Close~~	~~Active~~	~~BC~~	~~Check Exercise/ Refueling Outage~~	~~3~~
NCS-AOV-~~661~~A	~~Turbine building~~ component cooling water supply header isolation	Remote AO ~~Globe~~	Maintain Close Transfer Close	Active to Failed Remote Position	~~B~~	Remote Position Indication, Exercise/2 Years Exercise Full Stroke/ ~~Cold Shutdown~~ Operability Test	6
NCS-AOV-~~662~~A	~~Turbine building~~ component cooling water supply header isolation	Remote AO ~~Globe~~	Maintain Close Transfer Close	Active to Failed Remote Position	~~B~~	Remote Positi Indication, Exercise/2 Years Exercise Full Stroke/ ~~Cold Shutdown~~ Operability Test	
NCS-VLV-~~670~~A	~~Turbine building~~ component cooling water ~~supply~~ header check	Check	Maintain Close Transfer Close	Active	~~BC~~	Check Exercise/ Refueling Outage	3

057 A2 Butterfly Safety Seat Leakage A Refueling Outage Non-safety portion Isolation Leak Test

058 A2 Butterfly Safety Seat Leakage A Refueling Outage Non-safety portion Isolation Leak Test

036 A2 return Safety Seat Leakage A

Table 3.9-14 Valve Inservice Test Requirements (Sheet 71 of 112)

Valve Tag Number	Description	Valve/ Actuator Type	Safety Seat Leakage	Safety Functions(2)	ASME IST Category	Inservice Testing Type and Frequency	IST Notes
NCS-VLV-~~671~~A 037	~~Turbine building~~ component cooling water ~~supply~~ header check A2 return	Check	Maintain Close Transfer Close	Active	A ~~B~~C	Check Exercise/ Refueling Outage	3
NCS-AOV-~~661~~B 057	~~Turbine building~~ component cooling water supply header isolation C2	Remote AO ~~Globe~~ Butterfly	Maintain Close Transfer Close	Active to Failed Remote Position	A ~~B~~	Remote Position Indication, Exercise/2 Years Exercise Full Stroke/ ~~Cold Shutdown~~ Operability Test Refueling Outage	~~3~~
NCS-AOV-~~662~~B 058	~~Turbine building~~ component cooling water supply header isolation C2	Remote AO ~~Globe~~ Butterfly	Maintain Close Transfer Close	Active to Failed Remote Position	A ~~B~~	Remote Position Indication, Exercise/2 Years Exercise Full Stroke/ ~~Cold Shutdown~~ Operability Test Refueling Outage	~~3~~
NCS-VLV-~~670~~B 036	~~Turbine building~~ component cooling water ~~supply~~ header check C2 return	Check	Maintain Close Transfer Close	Active	A ~~B~~C	Check Exercise/ Refueling Outage	3
NCS-VLV-~~671~~B 037	~~Turbine building~~ component cooling water ~~supply~~ header check C2 return	Check	Maintain Close Transfer Close	Active	A ~~B~~C	Check Exercise/ Refueling Outage	3

Non-safety portion Isolation Leak Test

the surge tank accommodates the thermal expansion and contraction of the cooling water and potential leakage into or out of the CCWS.

Demineralized quality water with corrosion inhibitors is circulated in the CCWS. No outside impurities are expected to be infiltrated in the system, therefore, the CCW filter is not necessary. The impacts of non-safety related SSC failures in the CCW system will not adversely affect safety-related SSCs to perform their safety related function since the direct impact of a pipe break in the non-safety portion of the system can be accommodated. The CCW system's safety function will be maintained as a result of the nonsafety-related piping failure, and the indirect impact of the pipe break will not impact any SSC safety function.

9.2.2.2.1 Component Descriptions

The CCWS components are described below. Design parameters for major components of CCWS are provided in Table 9.2.2-2.

9.2.2.2.1.1 CCW HX

The CCW HXs transfer heat from the CCWS to the ESWS. The CCW HXs are plate type. The CCW HXs are designated quality group C as defined in Regulatory Guide 1.26 (Ref. 9.2.11-3), seismic category I, and are designed in accordance with the requirements of the ASME Section III, class 3.

9.2.2.2.1.2 CCWP

The CCWP circulates cooling water through the CCW HX and the components cooled by CCW

In the event that makeup water is not available, each CCWS surge tank compartment has a volume between the low-low level setpoint and the "0" instrument level of more than 800 gallons. This is more than adequate to accommodate potential system leakage from pump seals and valves over a seven-day period, as discussed in Subsection 9.2.2.3.2.

The moto

The pumps are designated quality group C as defined in Regulatory Guide 1.26, seismic category I, and are designed in accordance with the requirements of the ASME Section III, class 3.

The pumps are designed in consideration of head losses in the cooling water inlet piping based on ful mum pressure drop through the ss margin etc.

CCWS pumps. There are a total of two surge tanks, one for each of the two CCWS subsystems. Each surge tank is divided into two equal compartments by an internal partition plate; the partition plate extends above the high water level setpoint.

The surge ta ensure sufficient NPSH marg

9.2.2.2.1.3 CCW Surge Tank

The CCW surge tanks are connected to the suction side of the ~~CCWP~~. The surge tank accommodates the thermal expansion and contraction of the cooling water and potential leakage into or from the CCWS. Makeup water is supplied to the respective surge line.

Pipe rupture protection is addressed in Section 3.6, Protection against Dynamic Effects Associated with Postulated Rupture of Piping.

The CCWS continues to perform its safety function in the event of a fire. Subsection 9.5.1 addresses fire protection.

The R/B which contains safety-related portions of the CCWS is designed and constructed as a safety-related and seismic category I structure. The safety-related portions of the

The flow rate of make-up water to the surge tank is designed to be 75 gpm. This makeup capability is more than adequate to compensate for the worst case leakage through pump seals and valves if isolation of non-safety piping were required. In such a scenario, the total CCWS subsystem leak (two trains) rate is small; the potential total lost volume over a 7-day period is calculated to be less than 50 gallons per subsystem (including 25 gallons per 7 days associated with boundary isolation valving). This potential loss is also small in comparison to the available compartment water volume. Thus, the surge tank available water volume can compensate for potential leakage losses without makeup for at least 7 days. The makeup capability is also sufficient to compensate for failure of a CCWS pump seal. Such a leak could be terminated by isolation of the affected pump.

As indicated above, the potential tank water loss due to leakage over 7 days is small in comparison to the available surge tank water volume. The volume of water in each surge tank compartment between the low-low level setpoint and the instrument "0" level exceeds 800 gallons. This volume allows each tank compartment to accommodate leakage of more than 3 gallons per hour continuously for 7 days without affecting CCWS function, in the event that makeup were not available.

To provide additional capability for makeup after 7 days, if needed, each CCWS subsystem has a connection for water supply from the Fire Protection Water Supply System (FSS). Because the CCWS is designed to be isolated from non-safety piping with only a small system leakage rate, makeup through the FSS would not be required for at least 7 days, even in the event of a SSE.

9.2.2.3.2 Leakage from the CCWS

A decrease to the setpoint in the CCW surge tank water level initiates automatic makeup water to the surge tank and an alarm is transmitted to the main control room indicating a system leak. After the leak source is identified by visual inspection or by a change in individual CCW flow rate, the leak is isolated.

If the water level of the surge tank further decreases, the surge tank low-low water level signal is transmitted to the MCR and the header tie line isolation valves automatically close. Since the subsystem consists of two individual trains, the train with the leak can be isolated and the ~~other train~~ can be operated.

and return

In the event of a loss of system integrity in the non-seismic portion of the system, the CCWS is designed to maintain functionality by closing ~~both header tie line isolation valves and~~ the isolation valves in the supply lines to the non-seismic category I buildings. Automatic closure is activated upon the surge tank low-low water level signal. ~~Seismic Category I make-up to the component cooling surge tank is available from the refueling water storage pit.~~

9.2.2.3.3 Sharing of CCWS

The CCWS is not shared with multi-units.

SURVEILLANCE REQUIREMENTS

SURVEILLANCE		FREQUENCY
SR 3.7.7.1	----------NOTE---------- Isolation of CCW flow to individual components does not render the CCW System inoperable. ---------- Verify each CCW manual, power operated, and automatic valve in the flow path servicing safety related equipment, that is not locked, sealed, or otherwise secured in position, is in the correct position.	[31 days OR In accordance with the Surveillance Frequency Control Program]
SR 3.7.7.~~2~~ 4	Verify each CCW automatic valve in the flow path that is not locked, sealed, or otherwise secured in position, actuates to the correct position on an actual or simulated actuation signal.	[24 months OR In accordance with the Surveillance Frequency Control Program]
SR 3.7.7.~~3~~ 5	Verify each CCW pump starts automatically on an actual or simulated actuation signal.	[24 months OR In accordance with the Surveillance Frequency Control Program]

SR 3.7.7.2 Verify train leakage for each CCW train is less than 3 gallons per hour.

SR 3.7.7.3 Verify total subsystem leakage for CCW valving used to isolate non-safety piping is less than 25 gallons per 7 days.

[92 days
OR
In accordance with the Surveillance Frequency Control Program]

[24 months
OR
In accordance with the Surveillance Frequency Control Program]

BASES

SURVEILLANCE REQUIREMENTS (continued)

[The 31 day Frequency is based on engineering judgment, is consistent with the procedural controls governing valve operation, and ensures correct valve positions. OR The Surveillance Frequency is based on operating experience, equipment reliability, and plant risk and is controlled under the Surveillance Frequency Control Program.]

4

SR 3.7.7.2

This SR verifies proper automatic operation of the CCW valves on an actual or simulated actuation signal. The CCW System is a normally operating system that cannot be fully actuated as part of routine testing during normal operation. This Surveillance is not required for valves that are locked, sealed, or otherwise secured in the required position under administrative controls. [The 24 month Frequency is based on engineering judgment, taking into consideration the unit conditions required to perform the Surveillance, and is intended to be consistent with expected fuel cycle length. This equipment is not at risk of imminent damage as it is designed to remain functional and in good condition while in operation, thus significant degradation due to a longer surveillance interval should not be of major concern. The design reliability is, therefore, maintained by taking these considerations based on sound engineering judgment. OR The Surveillance Frequency is based on operating experience, equipment reliability, and plant risk and is controlled under the Surveillance Frequency Control Program.]

5

SR 3.7.7.3

SR 3.7.7.2

This SR verifies that CCW train leakage is within the limits necessary to assure that an adequate water volume is maintained in each CCW surge tank compartment for cooling required loads for 7 days after a postulated seismic event with no makeup water source. Successful completion of this test provides assurance that CCWS component leakage during the operating cycle would not prevent CCWS function without surge tank makeup for at least 7 days. [The 92 day Frequency is based on engineering judgment and was chosen to provide added assurance that a potential existing leak during power operation would not be so large as to prevent CCWS operation for 7 days if makeup were unavailable. OR The Surveillance Frequency is based on operating experience, equipment reliability, and plant risk and is controlled under the Surveillance Frequency Control Program.]

The leak rate of 3 gallons per hour is based on the water volume in each tank compartment between the low-low level setpoint and instrument zero; this volume is greater than 800 gallons. A train leak rate of 3 gallons per hour would require more than 7 days to deplete the compartment of this water volume. (The leak rate value is conservatively selected to account for measurement uncertainty and margin.) The low-low level setpoint is below the normal operating level of each compartment. The zero level is above the pump suction nozzle elevation used for CCWS pump NPSH calculations. Thus, surveillance of this leak rate assures that surge tank compartment water volume is adequate to support CCWS operation for a minimum of 7 days without makeup. During the surveillance, it is necessary to minimize fluctuations in CCWS heat load and potential temperature fluctuations that could affect level indication. If the surveillance result is not within allowable limits for a CCW train, that train will be declared inoperable and additional testing may be necessary to determine if the header tie line isolation valves (NCS-MOV-007A/B/C/D, NCS-MOV-020A/B/C/D) are degraded. If it is determined that train separation cannot be achieved due to abnormal leakage through a pair of the redundant header tie line isolation valves (e.g., NCS-MOV-007A and NCS-MOV-007B), then both of the affected trains will be declared inoperable.

The duration of SR 3.7.7.2 testing should be long enough for the installed instrumentation to accurately measure the system losses with considerations of environmental changes in temperatures affecting thermal contraction and expansion of water within the CCWS surge tanks.

SR 3.7.7.3

This SR verifies isolation valves between safety and non-safety portions of the CCWS that cannot be tested during power operation. Such valves, notably NCS-AOV-57A/B and NCS-AOV-58A/B, cannot be tested during power operation because closure of these valves would isolate important components associated with normal operation. However, these valves are not normally cycled during power operation; thus, their leak rate is not likely to significantly change after the test is performed and the valves are restored to the position required for power operation. The valves are tested using a local leak rate test method. The total calculated leakage from isolation valves for each subsystem shall not exceed 25 gallons per 7 days. Successful completion of this test provides assurance that leakage from these valves isolating will not prevent CCWS function without surge tank makeup for at least 7 days. [The 24 month Frequency is based on engineering judgment, taking into consideration the unit conditions required to perform the Surveillance, and is intended to be consistent with expected fuel cycle length. This equipment is not at risk of imminent damage as it is designed to remain functional and in good condition while in operation. OR The Surveillance Frequency is based on operating experience, equipment reliability, and plant risk and is controlled under the Surveillance Frequency Control Program.]

RESPONSE TO REQUEST FOR ADDITIONAL INFORMATION

7/29/2011

US-APWR Design Certification

Mitsubishi Heavy Industries

Docket No. 52-021

RAI NO.:	**NO. 571-4365 REVISION 0**
SRP SECTION:	**09.02.02 – REACTOR AUXILIARY COOLING WATER SYSTEM**
APPLICATION SECTION:	**9.2.2**
DATE OF RAI ISSUE:	**4/13/2010**

QUESTION NO.: 09.02.02-50
Follow-up to RAI 362-2278, question 09.02.02-26

Based on the staff's review of the applicant's response to RAI 09.02.02-26, the following items should be addressed:

1. All of the CCWS headers which penetrate containment were not addressed related to the possibility of two-phase flow; for example cooling lines to the excess letdown or letdown. This should be included in the RAI response and added to the DCD as required.
2. Procedures that direct operators to slowly open the valves (inching of valves) during an accident or post accident, related to the possibility of two-phase flow in headers inside containment, should be included in the DCD as a COL Information Item.
3. System voiding and water hammer mitigation were not addressed in the RAI response for a seismic event that drains down the CCWS surge tank due to a failure of the non safety related portion of the piping.

4. (New NRC question)
Need to address in the DCD fast closing of check valves (CCWS pump discharge) – potential pressure transients. Address if dampening devices are required. Need to address in the DCD potential pressure transients on the plate type heat exchangers (increase leakage).

Reference: MHI's Responses to US-APWR DCD RAI No. 362-2278; MHI Ref: UAP-HF-09388; dated July 16, 2009; ML092080393.

ANSWER:

1. The CCWS lines penetrate the containment at eight points: two cooling water supply lines and two cooling water return lines for the RCPs, one cooling water supply line and one cooling water return line for the Excess Letdown Hx, and one cooling water supply line and one cooling water return line for the Letdown Hx. Upon occurrence of a LOCA, these cooling water lines, with the exception of the line supplying cooling water to the RCP seal thermal barrier, are isolated in response to a containment isolation signal. Since the fluid flow is interrupted in the isolated piping, two-phase flow may occur when water flow resumes and is subjected to heat from non-cooled equipment.

   As for the RCP cooling water lines, the design has been modified such that flow is no

longer isolated to the thermal barriers after a containment isolation signal. Thus, this flow path is not subject to water hammer due to resumption of water flow.

As for the cooling water lines for the Excess Letdown Hx and Letdown Hx, water flow is not resumed after closure of the isolation valves as these lines are not used after containment isolation. Thus, the Excess Letdown Hx and Letdown Hx are not subject to water hammer due to resumption of water flow.

2. Due to the design change which removes automatic isolation to the RCP thermal barriers, there are no CCWS lines penetrating containment that are subject to two-phase conditions and must be reopened.

3. The CCWS is under pressure due to the static water head of the surge tank. In case of an earthquake, piping in non-seismic resistant buildings may break. However, voiding will not develop even if pressure is reduced in the broken section to atmospheric because the CCW water temperature is less than the saturation temperature at atmospheric pressure. Moreover, as isolation valves close to the non-earthquake resistant buildings because of low-low surge tank water level, the surge tank maintains a static water head. Thus, voiding is unlikely to occur in the event of pipe breaks. The DCD will be amended to provide this information.

4. The typical operating practice in Japan when starting and stopping the CCW pumps is as follows:

   - Pump discharge valves (NCS-VLV-018A/B/C/D) are first closed. The discharge valves are manually controlled by plant personnel at the valve location. Because of their large size (24"), the rate of closure of a manual discharge valve is not so fast as to cause a sudden increase in pressure or pressure differentials in the pump discharge piping. Thus, the potential for water hammer is minimized.
   - If the pump is required to be available for automatic start, the pump discharge valves are then reopened to ensure an open flow path.
   - If the pump is not required to be available for automatic start (e.g., it is out-of service for maintenance), the pump discharge valves are closed (which also isolates the associated heat exchanger from the other train). Based on operating experience in Japan, pressure relief vents are not used because the system design takes the pump head-flow curve into account. Similarly, there has been no indication that dampening devices are required to minimize pressure transients.

   However, the method of pump start/stop is an operational decision and is not discussed in the DCD. The method of pump start/stop assuming an open discharge valve is acceptable from a system design perspective. If the pump were stopped with the discharge valves remaining open, check valves (NCS-VLV-016A/B/C/D) close as flow decreases. System conditions and the potential impact forces are considered in the valve design. The heat exchanger remains exposed to pressure from the operating train; thus, the pressure-transient across the heat exchanger will be minimized and equalized based on check valve closure. Verification that there are not unacceptable water hammer or pressure waves detected with pump operation (start/stop) will also be added to Subsection 14.2.12.1.87.

   (Note: Discussions with the NRC staff indicate that closure of the discharge valve prior to pump start would require that the pump/train be declared "inoperable".)

Impact on DCD

DCD Tier 2 Subsection 9.2.2.2.2.6 will be revised as follows:

- Add explanation that voiding in piping will not occur even in the event of a break in non-seismic piping; thus, conditions for water hammer are not induced.

DCD Tier 2, Subsection 14.2.12.1.87 will be revised as follows:

- Add verification that there are not unacceptable water hammer or pressure waves detected when pumps are started or stopped.

Impact on R-COLA
There is no impact on the R-COLA.

Impact on S-COLA
There is no impact on the S-COLA.

Impact on PRA
There is no impact on the PRA.

valves can be manually reopened from the MCR to restore RCP seal and SFP HX cooling, if required.

As a minimum, two trains are required to operate during a LOCA.

9.2.2.2.2.5 Loss of Offsite Power (LOOP)

In the case of a LOOP, all CCWPs are automatically loaded onto their respective Class 1E power sources. The CCWS continues to provide cooling of the required components.

As a minimum, two trains are required to operate during a LOOP.

9.2.2.2.2.6 Water Hammer Prevention

The CCWS is designed in consideration of water hammer prevention and mitigation in accordance with the following as discussed in NUREG-0927.

- An elevated surge tank to keep the system filled.
- Vents for venting components and piping at all high points in the system.
- After any system drainage, venting is assured by personnel training and procedures.
- System valves are slow acting.

The COL Applicant is to develop a milestone schedule for implementation of the operating and maintenance procedures for water hammer prevention. The procedures should address the operating and maintenance procedures for adequate measures to avoid water hammer due to a voided line condition.

9.2.2.3 Safety Evaluation

The CCWS is designed to perform its safety function with only two out of four trains operating. As shown in Table 9.2.2-3, the CCWS is completely redundant and a single failur
for m

The s
interr
prote

The CCWS is under pressure due to the static water head of the surge tank. In case of an earthquake, piping in non-earthquake resistant buildings may break. However, voiding, and associated water hammer potential, will not develop even if pressure is reduced in the broken section to atmospheric because the CCW water temperature is less than the saturation temperature at atmospheric pressure. Moreover, as isolation valves to the non-earthquake resistant buildings close because of low-low surge tank water level, the surge tank maintains a static water head. Thus, voiding is unlikely to occur in the event of pipe breaks.

- Section 3.3, Wind and Tornado Loadings;
- Section 3.4, Water Level (Flood) Protection;
- Section 3.5, Missile Protection;
- Section 3.7, Seismic Design;

8. The CCW header tie line isolation valves' closure time is verified to be consistent with Subsection 9.2.2.2.1.5.

9. Demonstrate the ability to provide makeup water and verify flow to each pressurized CCW surge tank using DWS, PMWS and RWS supplies.

D. Acceptance Criteria

X. The CCWS SSCs design pressure is verified against unacceptable water hammer and pressure waves. The CCWS is potentially subject to water hammer and/or system pressure waves under plant conditions that will open/close the CCWS pump discharge check valve, for example, during CCWS pump swaps. The CCWS is verified to be adequately designed for these potential conditions when CCWS pumps are started and stopped.

1. The tank ala

2. The perform specification

3. Components that are supplied with CCW receive flows that are within the design specifications in each of the operating modes including the supply of coolant flow to the thermal barrier via cross-tie.

4. The pump control and interlocks operate as designed.

5. CCW system performance characteristics are within design specifications.

6. CCW surge tank vent valve high radiation logic operates as described in Subsection 9.2.2.5.2.

7. The thermal barrier heat exchanger cooling water return line isolation valve logic operates as described in Subsection 9.2.2.5.5.

8. The CCW header tie line isolation valves' closure logic and closure time are consistent with Subsection 9.2.2.2.1.5.

9. The ability to provide makeup water to each pressurized CCW surge tank using DWS, PMWS and RWS supplies is demonstrated.

14.2.12.1.88 Turbine Component Cooling Water System Preoperational Test

A. Objective

1. To verify that the systen cooling water to the des Subsection 9.2.8.

X. Verify that there is no evidence of unacceptable water hammer, excessive vibration, excessive noise, or unacceptable system pressure waves associated with pump discharge check valve functioning and that the CCWS SSCs (including the plate type heat exchanger gaskets) design values are not exceeded. The CCWS is verified to be adequately designed for these potential conditions during CCWS pump start and stop.

B. Prerequisites

1. Required construction testing is completed.

2. Component testing and instrument calibration is completed.

3. Test instrumentation is available and calibrated.

RESPONSE TO REQUEST FOR ADDITIONAL INFORMATION

7/29/2011

US-APWR Design Certification

Mitsubishi Heavy Industries

Docket No. 52-021

RAI NO.:	**NO. 571-4365 REVISION 0**
SRP SECTION:	**09.02.02 – REACTOR AUXILIARY COOLING WATER SYSTEM**
APPLICATION SECTION:	**9.2.2**
DATE OF RAI ISSUE:	**4/13/2010**

QUESTION NO.: 09.02.02-51
Follow-up to RAI 362-2278, question 09.02.02-27

Based on the staff's review of the applicant's response to RAI 09.02.02-27, the following items should be addressed related to items 2, 4 and 6:

Item 2: The design details should be provided such as system operating temperatures, pressures, and flow rates for all operating modes and alignments. Alternatively, bounding values could be provided.
Item 4: The Class 1E power supplies for the CCWS valves should be included in Tier 1 DCD Table 2.7.3.3-2. In addition, specific Class 1E power was not shown in Tier 1 for valves that are non-divisionalized, such as NCS-MOV-511, -517, and NCS-AOV 601, -602, -661A, -661B, -662A, and -662B etc.
Item 6: The surge tank water normal makeup and seismic category I makeup should be shown in Tier 1. Since each surge tank is shared between two divisions, the water makeup to the surge tank is necessary for the CCWS to perform its safety function, post seismic event.

Reference: MHI's Responses to US-APWR DCD RAI No. 362-2278; MHI Ref: UAP-HF-9388; dated July 16, 2009; ML092080393.

ANSWER:

Item 2: DCD Tier 2, Subsection 9.2.2.2.2 will be revised, and new DCD Tier 2, Figure 9.2.2-2 will be added, to provide detailed system parameters for all operating modes and alignments as summarized in DCD Tier 2, Tables 9.2.2-4 and 9.2.2-5. The new Figure 9.2.2-2 includes flow diagrams identifying system locations and a table listing the pressure, temperature, and flow rate conditions for each system location for each mode of operation, including Normal Power Operation, Cooldown by Containment Spray (CS)/Residual Heat Removal System (RHRS), Accident, Safe Shutdown, Startup and Refueling. The new Figure 9.2.2-2 (Sheets 5, 6) shows flows in the configuration that operators would be in after a header tie line isolation valve(s) (NCS-MOV-007, and 020) are manually closed to provide train separation. In addition, the 110°F in DCD Rev.2 Tier 2 Subsection 9.2.2.1.1 is incorrect. Therefore, DCD Tier 2 Subsection 9.2.2.1.1 will be revised to 125°F from 110°F.

Item 4: DCD Tier 1, Revision 3 has been submitted for NRC review [Ref. MHI letter UAP-HF-11078 dated 3/31/11]. Tier 1 Subsection 2.7.3.3.1 of DCD Revision 3 uses common wording for various systems to specify ITAAC requirements. In the case of CCW, an ITAAC requirement which specifies that Class 1E equipment will be powered from its respective division is referenced to Tier 1 Table 2.7.3.3-2. Similarly, Table 2.7.3.3-5, Item 6b, addresses a Design Commitment, ITA and Acceptance Criteria for Class 1E equipment on a division basis. A detailed listing of CCWS motor-operated valves vs. Class 1E division will be added to Tier 2 as a new Table 9.2.2-7. Note that Table 9.2.2-7 also reflects deletion of NCS-MOV-445A/B, 447A/B and 448A/B, consistent with the response to Q9.2.2-58.

Item 6: DCD Tier 1, Figure 2.7.3.3-1 will be revised to remove the surge tank makeup connection from the RWSP. The RWSP makeup pathway has been deleted. Makeup from the FSS could be used, if needed, in the event of a loss of system integrity in the non-seismic portion of the system after occurrence of a safe shutdown earthquake; however, makeup would not be required for more than seven days based on the leakage of the isolation boundaries to non-seismic piping. Thus, the FSS makeup line is not shown in Tier 1. (See response to Q9.2.2-69 for additional discussion regarding the potential use of FSS for surge tank makeup.) No makeup water source is necessary for ensuring that the safety function of the CCWS is met during normal operation or design basis accident conditions. Thus, the other non-seismic make-up water lines shown in DCD Tier 2, Figure 9.2.2-1 are also not shown in DCD Tier 1, Figure 2.7.3.3-1. The revision to Figure 2.7.3.3-1 provided in the response to Q9.2.2-49 includes deletion of the RWSP makeup source. As stated, several makeup pathways are shown in Tier 2. The revision to Figure 9.2.2-1 provided in the response to Q9.2.2-69 includes deletion of the RWSP surge tank makeup source and incorporation of the FSS source.

Impact on DCD

<u>DCD Tier 1, Figure 2.7.3.3-1 will be revised as follows</u>

- Delete the RWSP as source for surge tank makeup. See response to Q9.2.2-49 for revised figure.

<u>DCD Tier 2 Chapter 9 "Contents" will be revised consistent with other identified changes.</u>

<u>DCD Tier 2 Subsection 9.2.2.1.1, last bullet, will be revised as follows:</u>

- Correct maximum CCWS heat exchanger outlet temperature during design basis accident from 110 °F to 125 °F.

<u>DCD Tier 2 Subsection 9.2.2.2.1.5 will be revised as follows:</u>

- Add reference to new Table 9.2.2-7 which provides the electrical power division for CCWS motor and air operated valves.

<u>DCD Tier 2 Subsection 9.2.2.2.2 will be revised as follows:</u>

- Add the following to the end of the paragraph: "Figure 9.2.2-2 provides system operating parameters for various locations and operating modes."
- Add Figure 9.2.2-2 which provides pressure, temperature and flow rates for various CCWS configurations.

DCD Tier 2 Figure 9.2.2-1 will be revised as follows:

- Delete the RWSP as source for surge tank makeup and replace with FSS. See response to Q9.2.2-69 for revised figure.

Impact on R-COLA
There is no impact on the R-COLA.

Impact on S-COLA
There is no impact on the S-COLA.

Impact on PRA
There is no impact on the PRA.

TABLES

		Page
Table 9.1.2-1	Recommended Coupon Measurement Schedule	9.1-46
Table 9.1.2-2	Loads and Load Combinations for New and Spent Fuel Rack	9.1-47
Table 9.1.2-3	Light Load Drop Condition for New and Spent Fuel Rack	9.1-48
Table 9.1.3-1	Recommended Spent Fuel Pit Water Chemistry Speciation	9.1-48
Table 9.1.3-2	Spent Fuel Pit Design Parameters	9.1-48
Table 9.1.3-3	Spent Fuel Pit Cooling and Purification System Component Design Parameters	9.1-49
Table 9.1.5-1	Specification of the Spent Fuel Cask Handling Crane	9.1-51
Table 9.1.5-2	Specification of the Polar Crane	9.1-51
Table 9.1.5-3	Specification of the Equipment Hatch Hoist	9.1-52
Table 9.1.5-4	Cranes and Hoists Installed Over Safe Shutdown Equipment	9.1-53
Table 9.2.1-1	Essential Service Water System Component Design Data	9.2-62
Table 9.2.1-2	Essential Service Water System Failure Modes and Effects Analysis	9.2-63
Table 9.2.1-3	Essential Service Water System Heat Loads (in Btu/hr)	9.2-68
Table 9.2.1-4	Essential Service Water System Flow Balance (in gpm)	9.2-69
Table 9.2.2-1	Components Cooled by CCWS	9.2-70
Table 9.2.2-2	Component Cooling Water System Component Design Date	9.2-73
Table 9.2.2-3	Component Cooling Water System Failure Modes and Effects Analysis	9.2-74
Table 9.2.2-4	Component Cooling Water system Heat Load Unit of Heat Load [×106Btu/hr]	9.2-78
Table 9.2.2-5	Component Cooling Water system Flow Balance Unit of Flow Rate [gpm]	9.2-79
Table 9.2.4-1	Potable and Sanitary Water System Component Data	9.2-80
Table 9.2.2-7	Electrical Power Division of Remotely Operated Valves (Sheet 1 of 2)	9.2.2-79f
Table 9.2.2-7	Electrical Power Division of Remotely Operated Valves (Sheet 2 of 2)	9.2.2-79g
Table 9.2.5-2	UHS Heat Load for LOCA and Safe Shutdown with LOOP	9.2-82

FIGURES

		Page
Figure 9.1.1-1	New Fuel Storage Pit	9.1-54
Figure 9.1.1-2	Spent Fuel Pit	9.1-55
Figure 9.1.2-1	New Fuel Rack Array	9.1-56
Figure 9.1.2-2	Spent Fuel Rack Array	9.1-57
Figure 9.1.3-1	Schematic of Spent Fuel Pit Purification and Cooling System (Cooling Portion)	9.1-58
Figure 9.1.3-2	Schematic of Spent Fuel Pit Purification and Cooling System (Purification Portion)	9.1-59
Figure 9.1.4-1	Plan View of Light Load Handling System	9.1-60
Figure 9.1.4-2	Section View of Light Load Handling System	9.1-61
Figure 9.1.5-1	Traveling Route of Spent Fuel Cask	9.1-62
Figure 9.1.5-2	Traveling Route of Irradiation Sample Container	9.1-63
Figure 9.1.5-3	Traveling Route of Equipment Maintenance	9.1-64
Figure 9.1.5-4	Traveling Route of Heavy Load inside Containment	9.1-65
Figure 9.2.1-1	Essential Service Water System Piping and Instrumentation Diagram	9.2-94
Figure 9.2.2-1	Component Cooling Water System Piping and Instrumentation Diagram	9.2-97
Figure 9.2.4-1	Potable and Sanitary Water System Flow Diagram	9.2-106
Figure 9.2.2-2	Component Cooling Water System Mode Diagram (Sheet 1 of 6)	9.2.2-97a
Figure 9.2.2-2	Component Cooling Water System Mode Diagram (Sheet 2 of 6)	9.2.2-97b
Figure 9.2.2-2	Component Cooling Water System Mode Diagram (Sheet 3 of 6)	9.2.2-97c
Figure 9.2.2-2	Component Cooling Water System Mode Diagram (Sheet 4 of 6)	9.2.2-97d
Figure 9.2.2-2	Component Cooling Water System Mode Diagram (Sheet 5 of 6)	9.2.2-97e
Figure 9.2.2-2	Component Cooling Water System Mode Diagram (Sheet 6 of 6)	9.2.2-97f
Figure 9.2.7-1	Essential Chilled Water System Flow Diagram	9.2-112
Figure 9.2.7-2	Non-Essential Chilled Water System Flow Diagram	9.2-116
Figure 9.2.8-1	Turbine Component Cooling Water System Piping and Instrumentation Diagram	9.2-119
Figure 9.2.9-1	Non-Essential Service Water System Flow Diagram	9.2-120

- Applicable codes and standards for the CCWS are listed in Section 3.2. The containment isolation valves and the piping between the isolation valves are designed and constructed to the requirements of ASME section III, Class 2. The remainder of the system is designed and constructed to the requirements of ASME Section III, Class 3, except for the portion that is not required to perform safety functions.

- The CCWS, in conjunction with the Essential Service Water System (ESWS) and the Ultimate Heat Sink (UHS), is capable of removing sufficient heat from the essential heat exchangers to ensure a safe reactor shutdown and cooling following a postulated accident coincident with a loss of offsite power and assuming one train is unavailable due to maintenance and a single active failure in a second train.

- The CCWS, in conjunction with the ESWS, is capable of maintaining the outlet temperature of the CCW heat exchanger below the limits of ~~110~~ °F during a design basis accident with loss of offsite power.

125

9.2.2.1.2 Power Generation Design Bases

The CCWS is designed to:

- Serve as an intermediate system between components containing radioactive fluids, which are cooled by the system, and the ESWS so as to prevent direct leakage of radioactive fluid into the environment through the ESWS.

- Provide sufficient cooling capacity for the components required during normal operating conditions such as normal power operation, normal shutdown and refueling as described below.

- Detect leakage of radioactive material into the system and control leakage of radioactive material out of the system. The Component Cooling Water system is subjected to the design objectives of RG 4.21, "Minimization of Contamination and Radioactive Waste Generation: Life-Cycle Planning" as it contains radioactive liquid. A discussion of the design objectives and operational programs to address these radiological aspects of the system is contained in DCD Section 12.3.1. System and component design features addressing RG 4.21 (Ref. 9.2.11-9) are summarized in Table 12.3-8.

- Prevent long term corrosion that may degrade system performance.

9.2.2.1.2.1 Normal Operation

The CCWS is designed to transfer heat from the plant components required to support normal power operation with one train (pump and heat exchanger) unavailable due to online maintenance and a single active component failure. The CCWS is sized such that the component cooling water supply temperature to plant components is not more than 100°F. Normal operating heat loads are reactor coolant pump, charging pump, letdown heat exchanger, instrument air, spent fuel pool cooling heat exchanger, sample heat

The CCW surge tank is designated quality group C as defined in Regulatory Guide 1.26, seismic category I, and is designed to the requirements of the ASME Section III, class 3.

In case of a small leak out of the system, makeup water is supplied as necessary until the leak is isolated.

The makeup water can be supplied from the following systems:

- Demineralized water system (DWS) which supplies the demineralized water
- Primary makeup water system (PMWS) which supplies the deaerated water and primary makeup water
- Refueling water storage system (RWS) which supplies the refueling water

Deaerated water is used for initial filling of this system and demineralized water is used for automatic makeup when the tank water level reaches a low level setpoint.

If necessary, primary makeup water and refueling water may be used during an emergency. Refueling water storage pit is water source of seismic category I.

Water chemistry control of CCWS is performed by adding chemicals to the CCW surge tank to prevent long term corrosion that may degrade system performance. The CCW in the surge tank is covered with nitrogen gas to maintain water chemistry.

In order to provide redundancy for a passive failure (a loss of system integrity resulting in abnormal leakage), an internal partition plate is provided in the tank so that two separate surge tank volumes are maintained.

The CCW surge tank capacity of 50% is able to receive the amount of inleak from RCP thermal barrier Hx in consideration of isolation time. Regarding the makeup water source of the RWSP to be seismic category I, this makeup water source provides capacity to accommodate system leakage for seven days. Makeup water supply is performed by an operator by locally operating the manual valves. A vacuum breaker is installed on the surge tank to prevent damaging the tank in the event of a sudden decrease in water level.

9.2.2.2.1.4 Piping

Carbon steel is used for the piping of
welded, except where flanged connec

The following summarizes the major CCWS valves and their functions. Table 9.2.2-7 provides a listing of valves and the Class IE power source.

9.2.2.2.1.5 Valves

- **Header tie line isolation valve**

The function of this motor operated valve is to separate each subsystem into two independent trains during abnormal and accident conditions. This ensures each safety train is isolated from any potential passive failure in the non-safety portion or another safety train of the CCWS. This valve automatically closes at once upon the following signals:

9.2.2.2.2 System Operations

Table 9.2.2-4 and 9.2.2-5, respectively, provide heat loads and water flow balance for various operating modes.

Figure 9.2.2-2 provides system operating parameters for various locations and operating modes.

9.2.2.2.2.1 Normal Power Operation

During normal operation, at least one tr ce. A total of two CCWP and two CCW HXs a service is trains A or B and trains C or D.

During this operating condition, an operating CCWP in each subsystem supplies CCW to all loops in the particular subsystem with cooling water temperature not exceeding 100 °F maximum.

CCWPs which are not in service are placed in standby and automatically start upon a low pressure signal of CCW header pressure.

9.2.2.2.2.2 Normal Plant Shutdown

After approximately four hours of normal plant cool down, when the reactor coolant temperature and pressure are reduced to approximately 350 °F and 400 psig, the standby CCW HXs and pumps are placed in service resulting in four trains (i.e. four CCWPs and four CCW HXs) in operation. The CCWS isolation valve for each of the CS/RHR HXs is opened to supply cooling water to these HXs.

The failure of one cooling train (i.e. failure in one pump or one HX) increases the time for plant cool down, however, it does not affect the safe operation of the plant. The plant can be safely brought to the cold shutdown condition with a minimum of two trains.

During plant cool down by the residual heat removal system, the CCW supply temperature to the various components is permitted to increase to 110 °F.

9.2.2.2.2.3 Refueling

During refueling, the required number of CCW HXs and pumps is determined by the heat load. Normally, three trains operate in this mode. The remaining train may be taken out of service for maintenance. An operating CCWP in each subsystem supplies CCW to all loops in service in the particular subsystem with a maximum CCW supply water temperature not exceeding 100 °F.

9.2.2.2.2.4 Loss of Coolant Accident

All CCWP are automatically actuated by ECCS actuation signal. The start signal to the pumps is delayed. (Refer to Figure 8.3.1-2 Logic diagrams (Sheet 18 of 24)) The isolation valves for the CS/RHR HXs are automatically opened by the ECCS actuation signal and the same train CCWP start signal. The header tie line isolation valves are closed by an ECCS actuation signal in coincidence with an undervoltage signal, and the CCWS is separated into four individual trains (A, B, C and D). The header tie line isolation

Table 9.2.2-7 Electrical Power Division of Remotely Operated Valves (Sheet 1 of 2)

Valve Number	Operator Type	Electrical Power Division
MOV-007A-S	motor	A (Class 1E-station ac power source system)
MOV-007B-S	motor	B (Class 1E-station ac power source system)
MOV-007C-S	motor	C (Class 1E-station ac power source system)
MOV-007D-S	motor	D (Class 1E-station ac power source system)
MOV-020A-S	motor	A (Class 1E-station ac power source system)
MOV-020B-S	motor	B (Class 1E-station ac power source system)
MOV-020C-S	motor	C (Class 1E-station ac power source system)
MOV-020D-S	motor	D (Class 1E-station ac power source system)
MOV-145A-S	motor	A' (Class 1E-480V ac inverter supply system)
MOV-145B-S	motor	B' (Class 1E-480V ac inverter supply system)
MOV-145C-S	motor	C' (Class 1E-480V ac inverter supply system)
MOV-145D-S	motor	D' (Class 1E-480V ac inverter supply system)
MOV-232A-S	motor	B' (Class 1E-480V ac inverter supply system)
MOV-232B-S	motor	C' (Class 1E-480V ac inverter supply system)
MOV-233A-S	motor	B' (Class 1E-480V ac inverter supply system)
MOV-233B-S	motor	C' (Class 1E-480V ac inverter supply system)
MOV-234A-S	motor	B' (Class 1E-480V ac inverter supply system)
MOV-234B-S	motor	C' (Class 1E-480V ac inverter supply system)
MOV-316A-S	motor	A1 (Class 1E-station ac power source system (for 2 trains))
MOV-316B-S	motor	D1 (Class 1E-station ac power source system (for 2 trains))
MOV-321A-S	motor	A1 (Class 1E-station ac power source system (for 2 trains))
MOV-321B-S	motor	D1 (Class 1E-station ac power source system (for 2 trains))
MOV-322A-S	motor	A1 (Class 1E-station ac power source system (for 2 trains))
MOV-322B-S	motor	D1 (Class 1E-station ac power source system (for 2 trains))
MOV-323A-S	motor	A1 (Class 1E-station ac power source system (for 2 trains))
MOV-323B-S	motor	D1 (Class 1E-station ac power source system (for 2 trains))
MOV-324A-S	motor	A1 (Class 1E-station ac power source system (for 2 trains))
MOV-324B-S	motor	D1 (Class 1E-station ac power source system (for 2 trains))
MOV-325A-S	motor	A1 (Class 1E-station ac power source system (for 2 trains))
MOV-325B-S	motor	D1 (Class 1E-station ac power source system (for 2 trains))

Table 9.2.2-7 Electrical Power Division of Remotely Operated Valves (Sheet 2 of 2)

Valve Number	Operator Type	Electrical Power Division
MOV-326A-S	motor	A1 (Class 1E-station ac power source system (for 2 trains))
MOV-326B-S	motor	D1 (Class 1E-station ac power source system (for 2 trains))
MOV-401A-S	motor	C' (Class 1E-480V ac inverter supply system)
MOV-401B-S	motor	C' (Class 1E-480V ac inverter supply system)
MOV-402A-S	motor	B' (Class 1E-480V ac inverter supply system)
MOV-402B-S	motor	B' (Class 1E-480V ac inverter supply system)
MOV-436A-S	motor	C' (Class 1E-480V ac inverter supply system)
MOV-436B-S	motor	C' (Class 1E-480V ac inverter supply system)
MOV-438A-S	motor	B' (Class 1E-480V ac inverter supply system)
MOV-438B-S	motor	B' (Class 1E-480V ac inverter supply system)
MOV-446A-S	motor	A' (Class 1E-480V ac inverter supply system)
MOV-446B-S	motor	A' (Class 1E-480V ac inverter supply system)
MOV-446C-S	motor	D' (Class 1E-480V ac inverter supply system)
MOV-446D-S	motor	D' (Class 1E-480V ac inverter supply system)
FCV-129A-S	motor	B' (Class 1E-480V ac inverter supply system)
FCV-129B-S	motor	C' (Class 1E-480V ac inverter supply system)
FCV-130A-S	motor	B' (Class 1E-480V ac inverter supply system)
FCV-130B-S	motor	C' (Class 1E-480V ac inverter supply system)
FCV-131A-S	motor	B' (Class 1E-480V ac inverter supply system)
FCV-131B-S	motor	C' (Class 1E-480V ac inverter supply system)
FCV-132A-S	motor	B' (Class 1E-480V ac inverter supply system)
FCV-132B-S	motor	C' (Class 1E-480V ac inverter supply system)
MOV-511-S	motor	A' (Class 1E-480V ac inverter supply system)
MOV-517-S	motor	D' (Class 1E-480V ac inverter supply system)
MOV-531-S	motor	A' (Class 1E-480V ac inverter supply system)
MOV-537-S	motor	D' (Class 1E-480V ac inverter supply system)
AOV-057A-S	air	DA (Class 1E-125V dc power source supply system)
AOV-057B-S	air	DA (Class 1E-125V dc power source supply system)
AOV-058A-S	air	DD (Class 1E-125V dc power source supply system)
AOV-058B-S	air	DD (Class 1E-125V dc power source supply system)

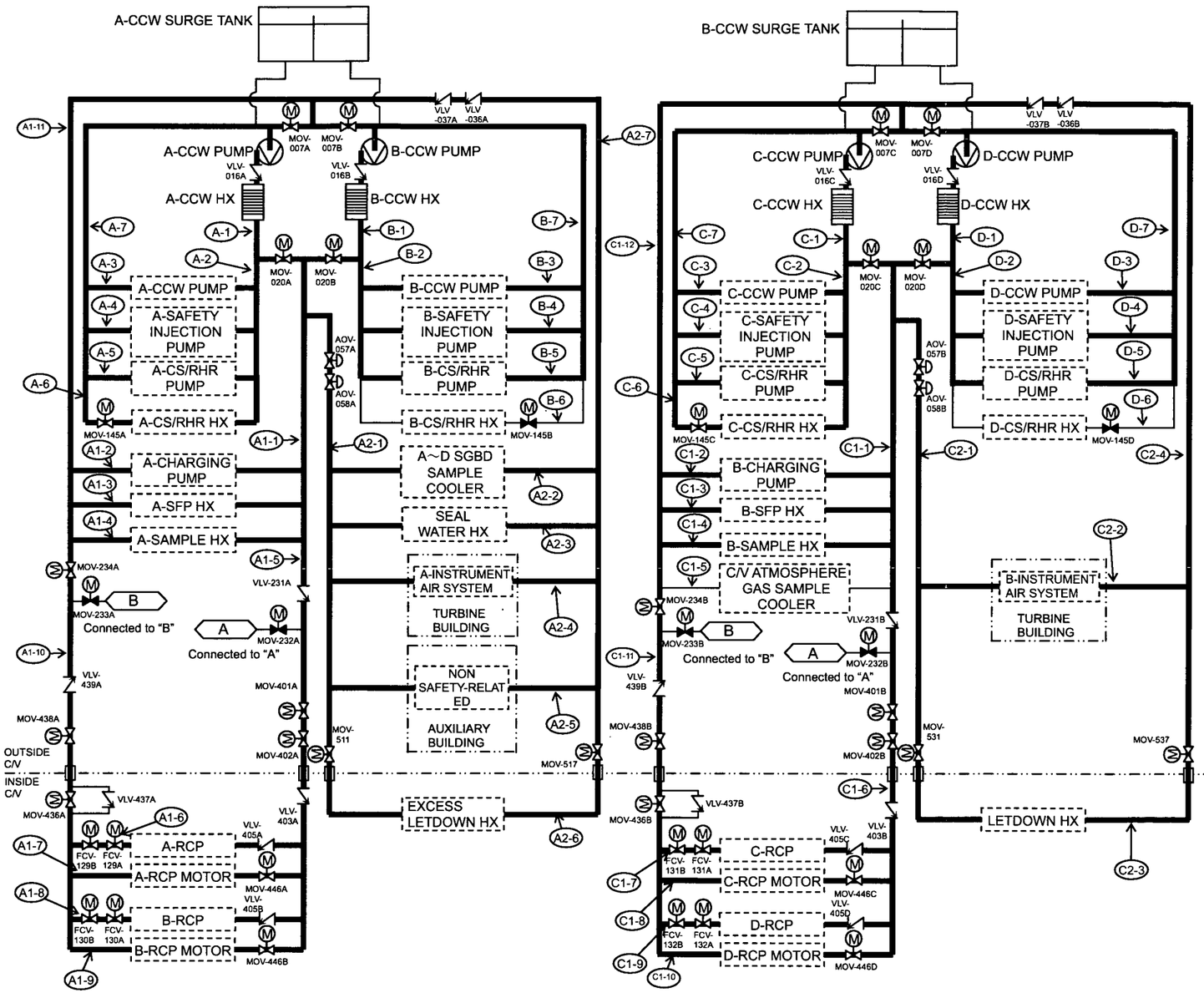

Location	Pressure (psig)	Temperature (deg F)	Flow Rate (gpm)	Location	Pressure (psig)	Temperature (deg F)	Flow Rate (gpm)
A-1	121	100	5918.5	C-1	121	100	5532.5
A-2	121	100	4700	C-2	121	100	4700
A-3	57	~200	40	C-3	57	~200	40
A-4	57	~200	180	C-4	57	~200	180
A-5	57	~200	80	C-5	57	~200	80
A-6	57	~200	4400	C-6	57	~200	4400
A-7	57	~200	4700	C-7	57	~200	4700
B-1	121	100	5918.5	D-1	121	100	5532.5
B-2	121	100	300	D-2	121	100	300
B-3	57	~200	40	D-3	57	~200	40
B-4	57	~200	180	D-4	57	~200	180
B-5	57	~200	80	D-5	57	~200	80
B-6	-	-	0	D-6	-	-	0
B-7	57	~200	300	D-7	57	~200	300
A1-1	121	100	4575	C1-1	121	100	4575
A1-2	57	~200	180	C1-2	57	~200	180
A1-3	57	~200	3600	C1-3	57	~200	3600
A1-4	57	~200	14.1	C1-4	57	~200	14.1
A1-5	121	100	780	C1-5	-	-	0
A1-6	57	~200	40	C1-6	121	100	780
A1-7	57	~200	350	C1-7	57	~200	40
A1-8	57	~200	40	C1-8	57	~200	350
A1-9	57	~200	350	C1-9	57	~200	40
A1-10	57	~200	780	C1-10	57	~200	350
A1-11	57	~200	4575	C1-11	57	~200	780
A2-1	121	100	2262	C1-12	57	~200	4575
A2-2	57	~200	60	C2-1	121	100	1490
A2-3	57	~200	250	C2-2	57	~200	190
A2-4	57	~200	190	C2-3	57	~200	1300
A2-5	57	~200	1488	C2-4	57	~200	1490
A2-6	57	~200	273.7				
A2-7	57	~200	2262				

Figure 9.2.2-2 Component Cooling Water System Mode Diagram (Sheet 1 of 6) Design-Startup

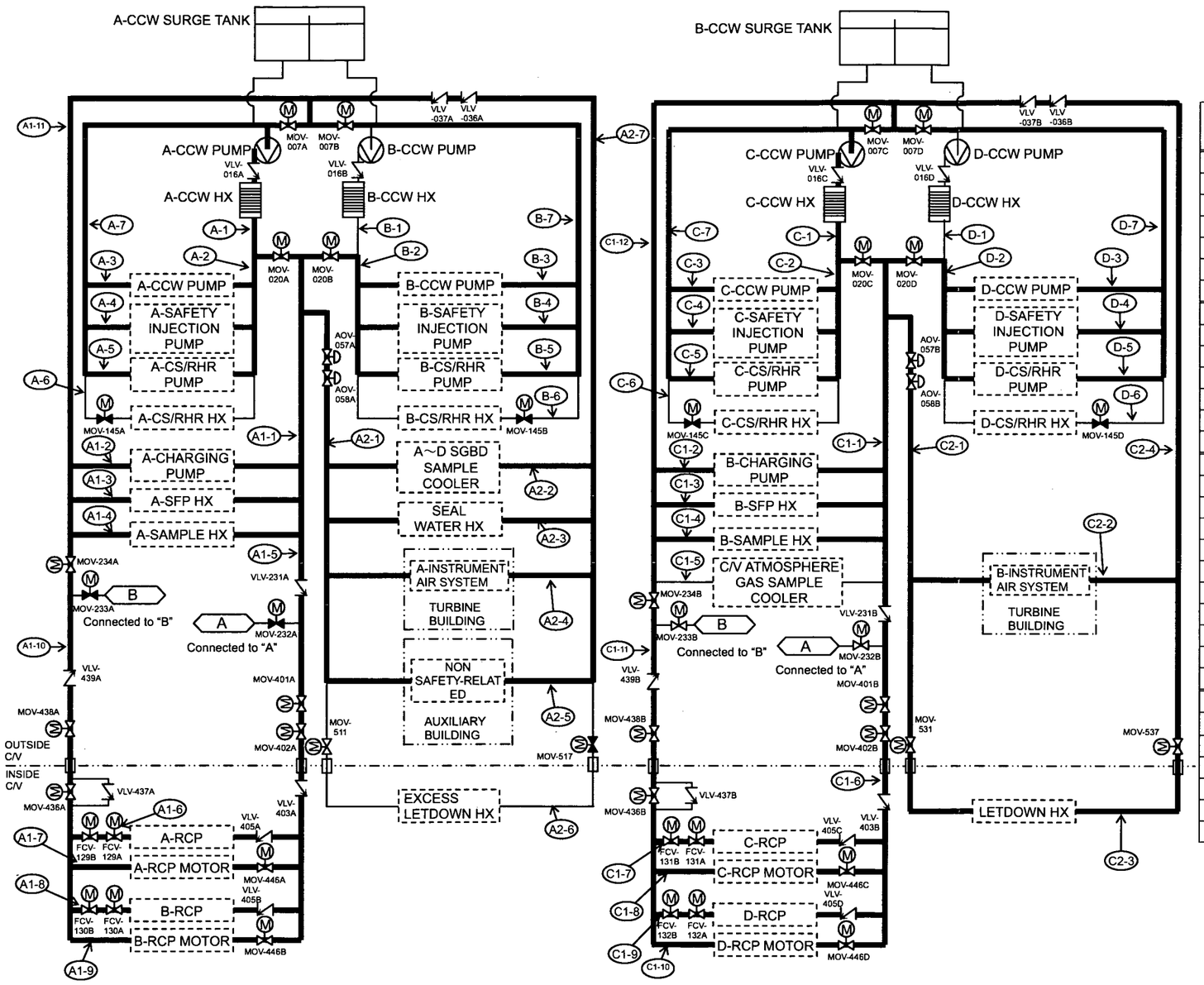

Location	Pressure (psig)	Temperature (deg F)	Flow Rate (gpm)	Location	Pressure (psig)	Temperature (deg F)	Flow Rate (gpm)
A-1	121	100	7163	C-1	121	100	6100
A-2	121	100	300	C-2	121	100	300
A-3	57	~200	40	C-3	57	~200	40
A-4	57	~200	180	C-4	57	~200	180
A-5	57	~200	80	C-5	57	~200	80
A-6	-	-	0	C-6	-	-	0
A-7	57	~200	300	C-7	57	~200	300
B-1	-	-	0	D-1	-	-	0
B-2	121	100	300	D-2	121	100	300
B-3	57	~200	40	D-3	57	~200	40
B-4	57	~200	180	D-4	57	~200	180
B-5	57	~200	80	D-5	57	~200	80
B-6	-	-	0	D-6	-	-	0
B-7	57	~200	300	D-7	57	~200	300
A1-1	121	100	4575	C1-1	121	100	4575
A1-2	57	~200	180	C1-2	57	~200	180
A1-3	57	~200	3600	C1-3	57	~200	3600
A1-4	57	~200	14.1	C1-4	57	~200	14.1
A1-5	121	100	780	C1-5	-	-	0
A1-6	57	~200	40	C1-6	121	100	780
A1-7	57	~200	350	C1-7	57	~200	40
A1-8	57	~200	40	C1-8	57	~200	350
A1-9	57	~200	350	C1-9	57	~200	40
A1-10	57	~200	780	C1-10	57	~200	350
A1-11	57	~200	4575	C1-11	57	~200	780
A2-1	121	100	1988	C1-12	57	~200	4575
A2-2	57	~200	60	C2-1	121	100	925
A2-3	57	~200	250	C2-2	57	~200	190
A2-4	57	~200	190	C2-3	57	~200	734.4
A2-5	57	~200	1488	C2-4	57	~200	925
A2-6	-	-	0				
A2-7	57	~200	1988				

Figure 9.2.2-2 Component Cooling Water System Mode Diagram (Sheet 2 of 6) Design-Power Operation

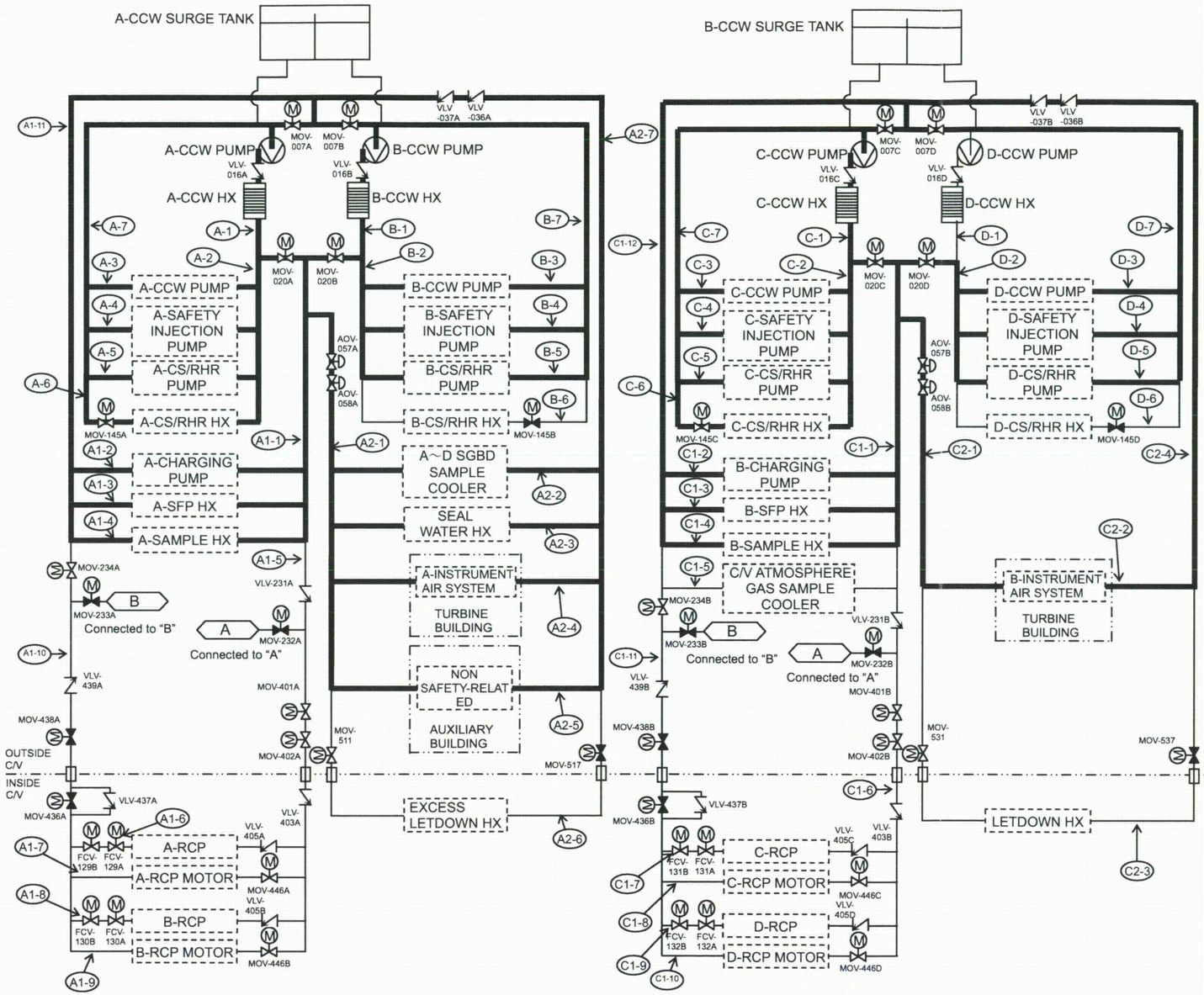

Location	Pressure (psig)	Temperature (deg F)	Flow Rate (gpm)	Location	Pressure (psig)	Temperature (deg F)	Flow Rate (gpm)
A-1	121	100	5391.5	C-1	121	100	8985
A-2	121	100	4700	C-2	121	100	4700
A-3	57	~200	40	C-3	57	~200	40
A-4	57	~200	180	C-4	57	~200	180
A-5	57	~200	80	C-5	57	~200	80
A-6	57	~200	4400	C-6	57	~200	4400
A-7	57	~200	4700	C-7	57	~200	4700
B-1	121	100	5391.5	D-1	-	-	0
B-2	121	100	300	D-2	121	100	300
B-3	57	~200	40	D-3	57	~200	40
B-4	57	~200	180	D-4	57	~200	180
B-5	57	~200	80	D-5	57	~200	80
B-6	-	-	0	D-6	-	-	0
B-7	57	~200	300	D-7	57	~200	300
A1-1	121	100	3795	C1-1	121	100	3795
A1-2	57	~200	180	C1-2	57	~200	180
A1-3	57	~200	3600	C1-3	57	~200	3600
A1-4	57	~200	14.1	C1-4	57	~200	14.1
A1-5	-	-	0	C1-5	-	-	0
A1-6	-	-	0	C1-6	-	-	0
A1-7	-	-	0	C1-7	-	-	0
A1-8	-	-	0	C1-8	-	-	0
A1-9	-	-	0	C1-9	-	-	0
A1-10	-	-	0	C1-10	-	-	0
A1-11	57	~200	3795	C1-11	-	-	0
A2-1	121	100	1988	C1-12	57	~200	3795
A2-2	57	~200	60	C2-1	121	100	190
A2-3	57	~200	250	C2-2	57	~200	190
A2-4	57	~200	190	C2-3	-	-	0
A2-5	57	~200	1488	C2-4	57	~200	190
A2-6	-	-	0				
A2-7	57	~200	1988				

Figure 9.2.2-2 Component Cooling Water System Mode Diagram (Sheet 3 of 6) Design-Refueling

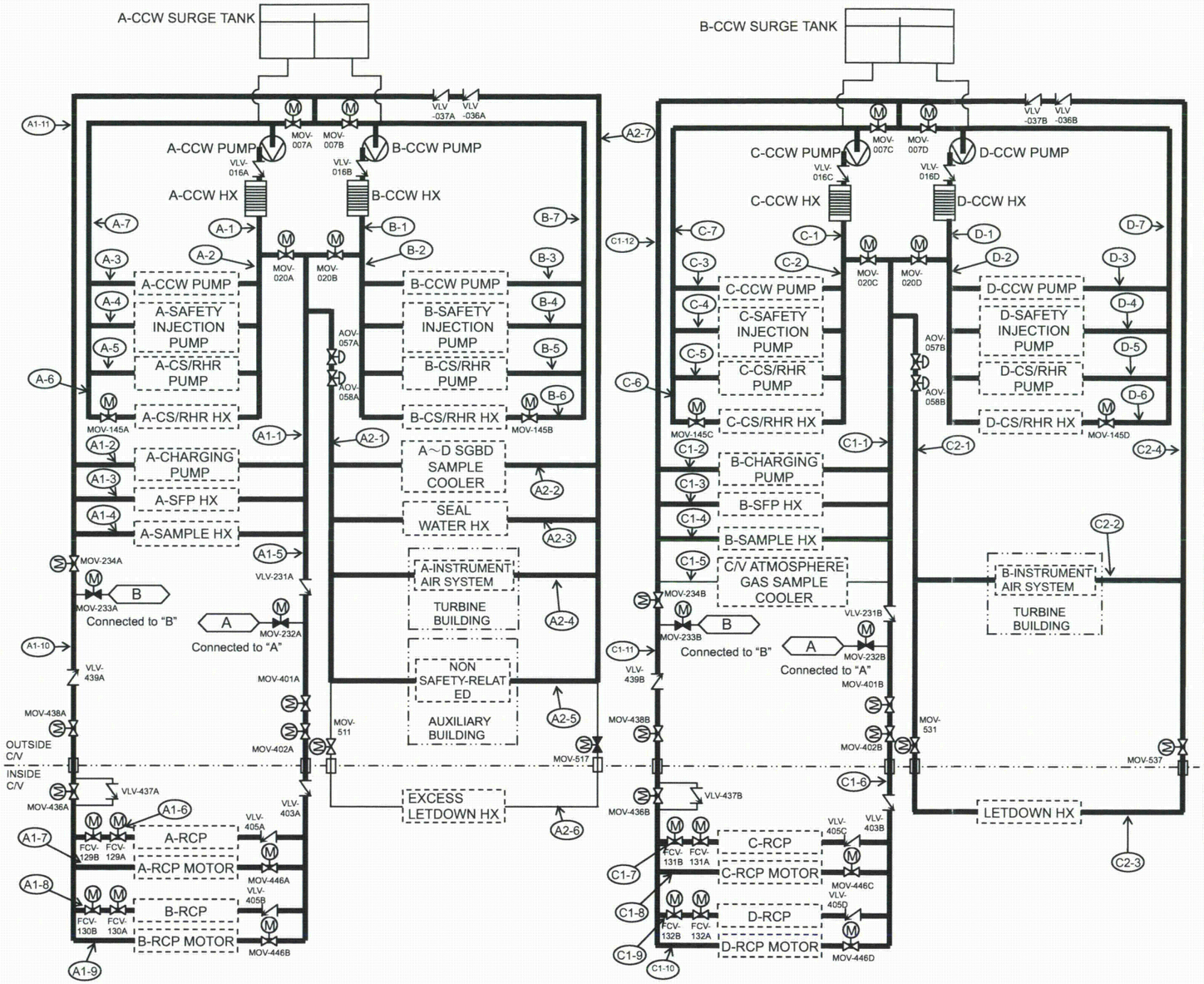

Location	Pressure (psig)	Temperature (deg F)	Flow Rate (gpm)	Location	Pressure (psig)	Temperature (deg F)	Flow Rate (gpm)
A-1	121	104	7981.5	C-1	121	104	7732.5
A-2	121	104	4700	C-2	121	104	4700
A-3	57	~200	40	C-3	57	~200	40
A-4	57	~200	180	C-4	57	~200	180
A-5	57	~200	80	C-5	57	~200	80
A-6	57	~200	4400	C-6	57	~200	4400
A-7	57	~200	4700	C-7	57	~200	4700
B-1	121	104	7981.5	D-1	121	104	7732.5
B-2	121	104	4700	D-2	121	104	4700
B-3	57	~200	40	D-3	57	~200	40
B-4	57	~200	180	D-4	57	~200	180
B-5	57	~200	80	D-5	57	~200	80
B-6	57	~200	4400	D-6	57	~200	4400
B-7	57	~200	4700	D-7	57	~200	4700
A1-1	121	104	4575	C1-1	121	104	4575
A1-2	57	~200	180	C1-2	57	~200	180
A1-3	57	~200	3600	C1-3	57	~200	3600
A1-4	57	~200	14.1	C1-4	57	~200	14.1
A1-5	121	104	780	C1-5	-	-	0
A1-6	57	~200	40	C1-6	121	104	780
A1-7	57	~200	350	C1-7	57	~200	40
A1-8	57	~200	40	C1-8	57	~200	350
A1-9	57	~200	350	C1-9	57	~200	40
A1-10	57	~200	780	C1-10	57	~200	350
A1-11	57	~200	4575	C1-11	57	~200	780
A2-1	121	104	1988	C1-12	57	~200	4575
A2-2	57	~200	60	C2-1	121	100	1490
A2-3	57	~200	250	C2-2	57	~200	190
A2-4	57	~200	190	C2-3	57	~200	1300
A2-5	57	~200	1488	C2-4	57	~200	1490
A2-6	-	-	0				
A2-7	57	~200	1988				

Figure 9.2.2-2 Component Cooling Water System Mode Diagram (Sheet 4 of 6) Design-Cooldown by CS/RHRS

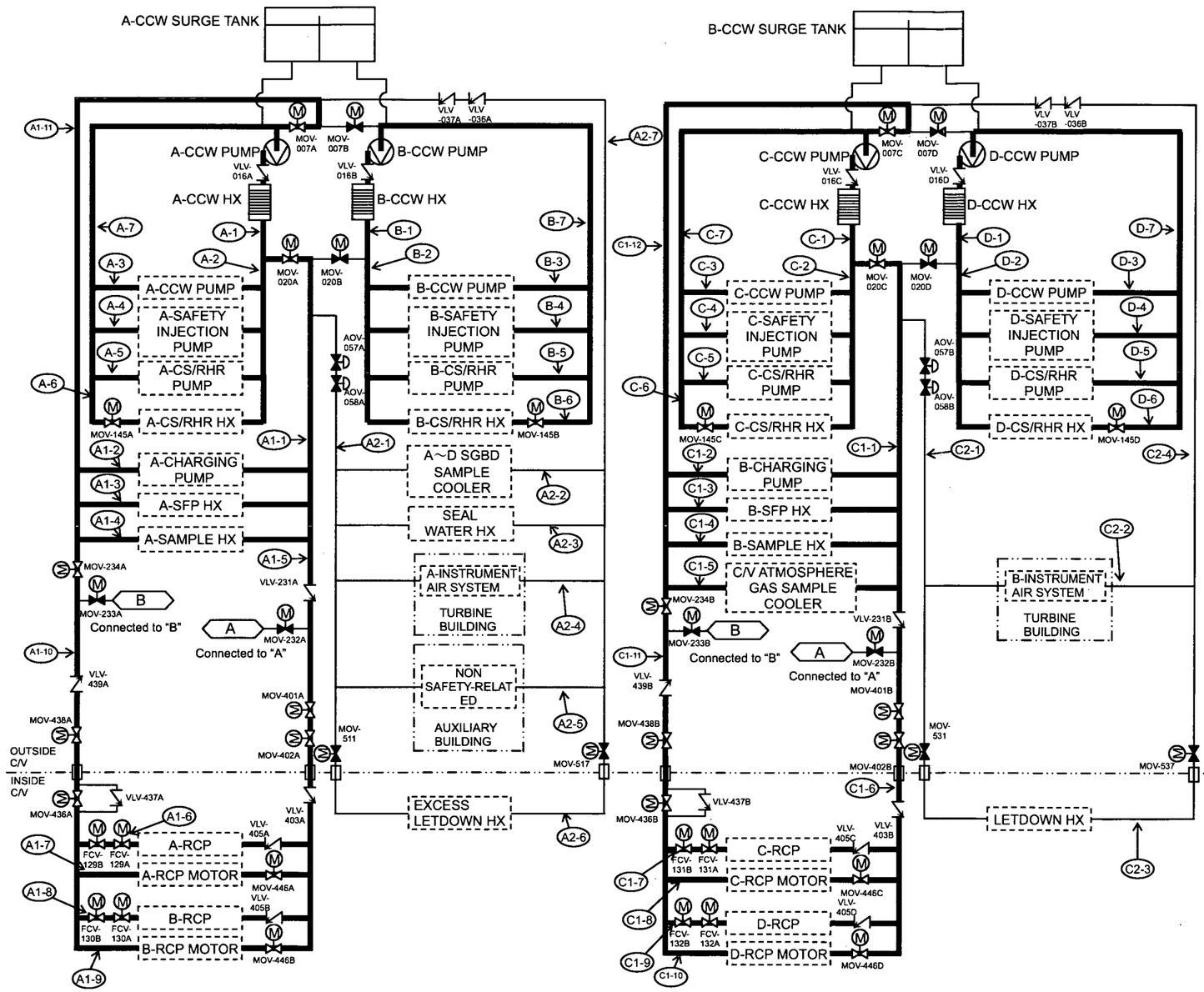

Location	Pressure (psig)	Temperature (deg F)	Flow Rate (gpm)	Location	Pressure (psig)	Temperature (deg F)	Flow Rate (gpm)
A-1	121	125	9275	C-1	121	125	9292
A-2	121	125	4700	C-2	121	125	4700
A-3	57	~200	40	C-3	57	~200	40
A-4	57	~200	180	C-4	57	~200	180
A-5	57	~200	80	C-5	57	~200	80
A-6	57	~200	4400	C-6	57	~200	4400
A-7	57	~200	4700	C-7	57	~200	4700
B-1	121	125	4700	D-1	121	125	4700
B-2	121	125	4700	D-2	121	125	4700
B-3	57	~200	40	D-3	57	~200	40
B-4	57	~200	180	D-4	57	~200	180
B-5	57	~200	80	D-5	57	~200	80
B-6	57	~200	4400	D-6	57	~200	4400
B-7	57	~200	4700	D-7	57	~200	4700
A1-1	121	125	4575	C1-1	121	125	4592
A1-2	57	~200	180	C1-2	57	~200	180
A1-3	57	~200	3600	C1-3	57	~200	3600
A1-4	57	~200	14.1	C1-4	57	~200	14.1
A1-5	121	125	780	C1-5	57	~200	17.7
A1-6	57	~200	40	C1-6	121	125	780
A1-7	57	~200	350	C1-7	57	~200	40
A1-8	57	~200	40	C1-8	57	~200	350
A1-9	57	~200	350	C1-9	57	~200	40
A1-10	57	~200	780	C1-10	57	~200	350
A1-11	57	~200	4575	C1-11	57	~200	780
A2-1	-	-	0	C1-12	57	~200	4592
A2-2	-	-	0	C2-1	-	-	0
A2-3	-	-	0	C2-2	-	-	0
A2-4	-	-	0	C2-3	-	-	0
A2-5	-	-	0	C2-4	-	-	0
A2-6	-	-	0				
A2-7	-	-	0				

Note1: The figure illustrates configuration after a pair of header tie line isolation valve(s) (NCS-MOV-007, NCS-MOV-020) are manually closed to provide train separation.

Figure 9.2.2-2 Component Cooling Water System Mode Diagram (Sheet 5 of 6) Design-Accident

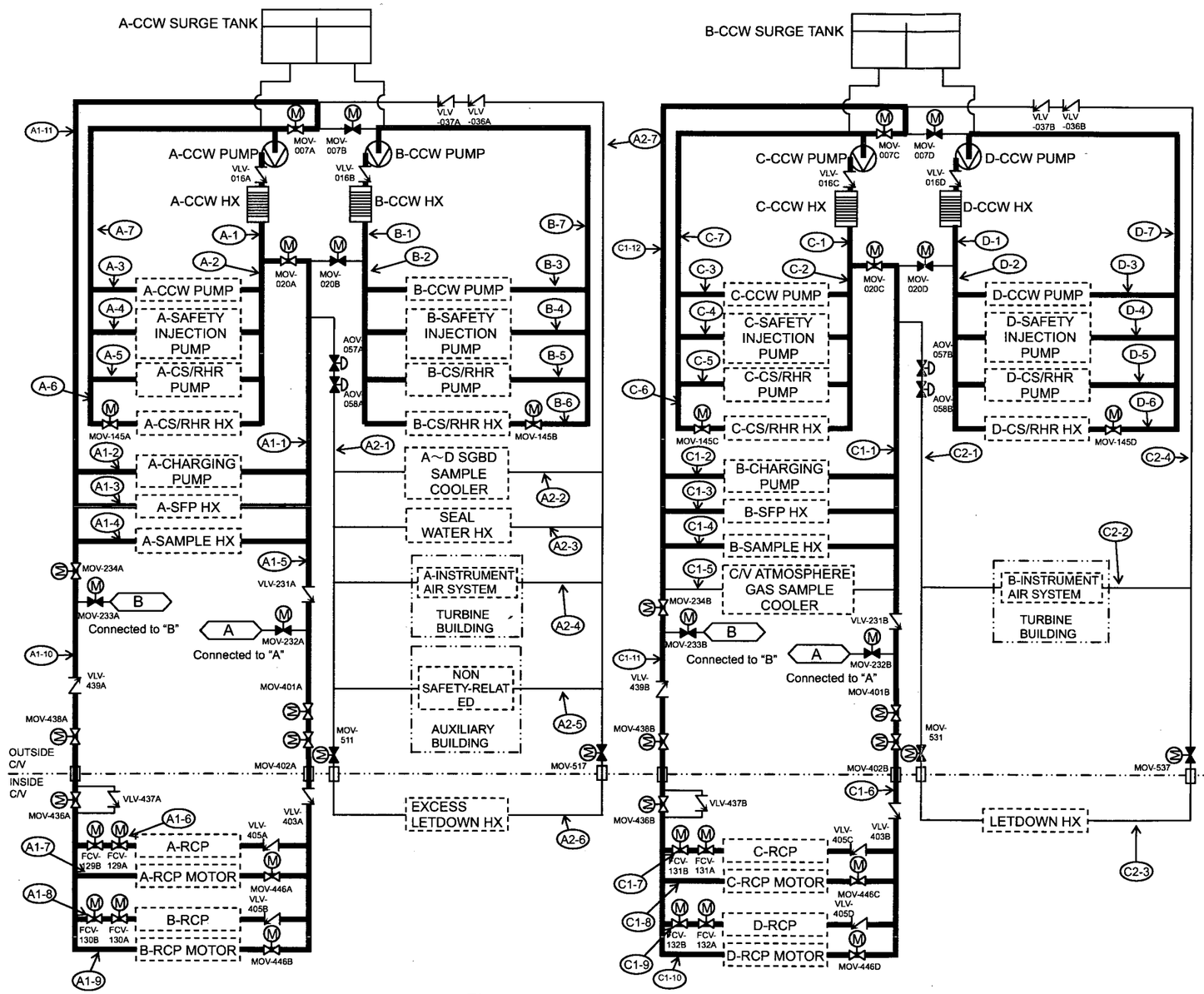

Location	Pressure (psig)	Temperature (deg F)	Flow Rate (gpm)	Location	Pressure (psig)	Temperature (deg F)	Flow Rate (gpm)
A-1	121	125	9275	C-1	121	125	9275
A-2	121	125	4700	C-2	121	125	4700
A-3	57	~200	40	C-3	57	~200	40
A-4	57	~200	180	C-4	57	~200	180
A-5	57	~200	80	C-5	57	~200	80
A-6	57	~200	4400	C-6	57	~200	4400
A-7	57	~200	4700	C-7	57	~200	4700
B-1	121	125	4700	D-1	121	125	4700
B-2	121	125	4700	D-2	121	125	4700
B-3	57	~200	40	D-3	57	~200	40
B-4	57	~200	180	D-4	57	~200	180
B-5	57	~200	80	D-5	57	~200	80
B-6	57	~200	4400	D-6	57	~200	4400
B-7	57	~200	4700	D-7	57	~200	4700
A1-1	121	125	4575	C1-1	121	125	4575
A1-2	57	~200	180	C1-2	57	~200	180
A1-3	57	~200	3600	C1-3	57	~200	3600
A1-4	57	~200	14.1	C1-4	57	~200	14.1
A1-5	121	125	780	C1-5	-	-	0
A1-6	57	~200	40	C1-6	121	125	780
A1-7	57	~200	350	C1-7	57	~200	40
A1-8	57	~200	40	C1-8	57	~200	350
A1-9	57	~200	350	C1-9	57	~200	40
A1-10	57	~200	780	C1-10	57	~200	350
A1-11	57	~200	4575	C1-11	57	~200	780
A2-1	-	-	0	C1-12	57	~200	4575
A2-2	-	-	0	C2-1	-	-	0
A2-3	-	-	0	C2-2	-	-	0
A2-4	-	-	0	C2-3	-	-	0
A2-5	-	-	0	C2-4	-	-	0
A2-6	-	-	0				
A2-7	-	-	0				

Note1: The figure illustrates configuration after a pair of header tie line isolation valve(s) (NCS-MOV-007, NCS-MOV-020) are manually closed to provide train separation.

Figure 9.2.2-2 Component Cooling Water System Mode Diagram (Sheet 6 of 6) Design-Safe Shutdown

RESPONSE TO REQUEST FOR ADDITIONAL INFORMATION

7/29/2011

US-APWR Design Certification

Mitsubishi Heavy Industries

Docket No. 52-021

RAI NO.:	**NO. 571-4365 REVISION 0**
SRP SECTION:	**09.02.02 – REACTOR AUXILIARY COOLING WATER SYSTEM**
APPLICATION SECTION:	**9.2.2**
DATE OF RAI ISSUE:	**4/13/2010**

QUESTION NO.: 09.02.02-52
Follow-up to RAI 362-2278, question 09.02.02-28

Based on the staff's review of the applicant's response to RAI 09.02.02-28, the following items should be addressed:

- The proposed revisions to the DCD did not sufficiently address the original RAI. Section 9.2.2 should fully describe and explain what the minimum system heat transfer and flow requirements are for normal operating, refueling, and accident conditions, the bases for these requirements including limiting assumptions that apply (such as temperature considerations), how much excess margin is available and how this was determined, and what limiting system temperatures and pressures are assumed with supporting basis. In addition, there were no supporting bases for the design. The RAI response should re-address these items and clearly address excess margin that is available.
- The response indicated that DCD Tier 2 Subsection 9.2.2.2.2.1, "Normal Power Operation," would be revised per an attached markup to clarify CCWS temperature control; however, this attachment did not appear in the response, nor did DCD revision 2 indicate any changes.

Reference: MHI's Responses to US-APWR DCD RAI No. 362-2278; MHI Ref: UAP-HF-09388; dated July 16, 2009; ML092080393.

ANSWER:

- The CCWS plate-type heat exchangers have a "design" capacity of 50 x 10^6 BTU/hr to allow removal of the normal operating heat load using two heat exchangers. The design heat load is determined by summing the individual user requirements, which are listed in DCD Tier 2 Table 9.2.2-6. (Table 9.2.2-6 is provided in the response to Question 9.2.2-54.) Note that the SFP heat exchanger load is based on ANSI/ANS 5.1 decay heat modeling, which predicts about 30% larger decay heat than ORIGEN 2.2 output. That is, the heat load shown in Table 9.2.2-6 for the SFP heat exchanger is 20.3 x10^6 Btu/hr, based on the design SFP loading described in Section 9.1.3.1; this heat load exceeds the ORIGEN 2.2 output by about 6 x10^6 Btu/hr. The design CCWS heat exchanger capacity is 50 x10^6 Btu/hr; therefore, in practice there is about a 10% margin (6/50) in the CCWS design heat removal capacity. The DCD markup has been revised to clarify the basis for the 10% margin. Additionally, vendor design

margin for the heat exchanger area is a minimum of 20% over the design heat exchanger area of 11068 ft^2 provided in the attached Table 9.2.2.52-1. Actual heat exchanger performance based on these design considerations will reflect the temperature differential across the heat exchange surface (ΔT) and the product of overall heat exchange coefficient and area (UA). The heat exchange area, A, does not change for the required condition; however U and ΔT will change due to changes in flow rate or temperature differential in each heat exchange condition. The attached Table 9.2.2.52-1 summarizes heat exchanger performance for the key operating conditions. As indicated in the table, the "design" condition of 50×10^6 Btu/hr is associated with CCW and ESW flow rates of 11000 gpm, consistent with DCD Table 9.2.2-2. The maximum CCWS design outlet temperature is 100°F and maximum cooling water inlet temperature from ESWS is 95°F. These are the design conditions which are used for normal operation. The table indicates the UA value for the design condition, which will be added to DCD Table 9.2.2-2. Other operating conditions and the resultant heat transfer rates are shown in the attached Table 9.2.2.52-1. DCD Subsection 9.2.2.2.1.1 and DCD Tables 9.2.2-2, 9.2.2-4 and 9.2.2-5 will be revised to summarize the design information and show the heat transfer and flow rates at other operating conditions. Heat exchanger design calculations are documented as MHI calculations, which are available for audit.

- The response to Question 09.02.02-28 provided in UAP-HF-09388 stated that "DCD Tier 2 section 9.2.2.2.2.1 Normal Power Operation will be revised per the attached markup to clarify CCWS temperature control". The response incorrectly referred to a change in Subsection 9.2.2.2.2.1 and an attachment; this attachment does not exist. In DCD Revision 2, Subsection 9.2.2.1.2.1 "Normal Operation" was added, but did not explicitly address temperature control. The changes proposed in the response to Q9.2.2-67 address CCWS temperature control (i.e., flow rate is regulated using manual flow control valves to achieve desired temperature) and supersede the response provided in UAP-HF-09388.

Impact on DCD

<u>DCD Tier 2 Subsection 9.2.2.1.2 will be revised as follows:</u>

- Change title of Subsection 9.2.2.1.2.1 from "Normal Operation" to "Power Operation"
- Change title of Subsection 9.2.2.1.2.2 from "Normal Plant Cooldown" to "Cooldown by CS/RHRS"
- Add Subsection 9.2.2.1.2.4, "Startup"
- Add Subsection 9.2.2.1.2.5, "Accident"
- Add Subsection 9.2.2.1.2.6, "Safe Shutdown"
- Editorial changes

<u>DCD Tier 2 Subsection 9.2.2.2.1.1 will be revised as follows:</u>

- Add description of CCWS heat exchanger "design" condition,
- Add allowable CCWS heat exchanger supply temperatures to loads for all operating modes
- Margin and the bases for margin determination

<u>DCD Tier 2 Table 9.2.2-2 will be revised as follows:</u>

- Add "UA" value for design condition
- Editorial changes

<u>DCD Tier 2 Table 9.2.2-4 will be revised as follows:</u>

- Add heat loads for Startup and Refueling operating conditions

- Add note addressing effect of opening RCP cross-tie valves
- Editorial changes

DCD Tier 2 Table 9.2.2-5 will be revised as follows:

- Add flow rates for Startup and Refueling operating conditions
- Add note addressing effect of opening RCP cross-tie valves
- Editorial changes

Impact on R-COLA
There is no impact on the R-COLA.

Impact on S-COLA
There is no impact on the S-COLA.

Impact on PRA
There is no impact on the PRA.

Table 9.2.2.52-1: CCWS Heat Exchanger Performance

		CCWS Flow Rate	CCWS Specific Heat	ESWS Flow rate	ESW Specific Heat	Heat Transfer	CCW Inlet Temperature	CCWS Outlet Temperature	ESWS Inlet Temperature	ESWS Outlet Temperature	Key Values				
		(1)	(2)	(3)	(4)	(5)	(6)=(5)／〔(1) x (2)〕+(7)	(7)	(8)	(9)=(5)／〔(3) x (4)〕+(8)	(10)=(6) - (9)	(11)=(7) - (8)	(12)=[(11) - (10)] / ln [(11)/(10)] 〔 if (10)=(11), (12)=(10)=(11) 〕	(13)=(5) / (12)	(14) [Design Area]
Symbol		W_{CCW}	Cp	W_{ESW}	Cp	Q	T1	T2	t1	t2	ΔT1	ΔT2	ΔTL	UA	A
Unit		gpm	Btu/ lbm・°F	gpm	Btu/ lbm・°F	Btu/hr	°F	°F	°F	°F	°F	°F	°F	BTU/ (°F・h)	ft^2
Design		**11000**	**1**	**11000**	**1**	**50.0E+06**	**109.1**	**100**	**95**	**104.1**	**5**	**5**	**5.0**	**1.0E+07**	**11068**
Operating Condition	Startup	5919	1	11000	1	32.8E+06	111.1	100	95	101	10.1	5	7.2	4.6E+06	11068
	Normal	7163	1	11000	1	50.0E+06	114	100	95	104.1	9.9	5	7.1	7.1E+06	11068
	Cooldown	7982	1	11000	1	110.2E+06	137.6	110	95	115.1	22.5	15	18.4	6.0E+06	11068
	Refueling	8985	1	11000	1	41.9E+06	109.4	100	95	102.7	6.7	5	5.8	7.2E+06	11068
	Accident	9585	1	11000	1	161.7E+06	158.7	125	95	124.4	34.3	30	32.1	5.0E+06	11068
	Safe shutdown	9585	1	11000	1	190.9E+06	164.8	125	95	129.7	35.1	30	32.4	5.9E+06	11068

Note: Vendor specification requires a minimum of 20% additional area over "Design Area".

- Applicable codes and standards for the CCWS are listed in Section 3.2. The containment isolation valves and the piping between the isolation valves are designed and constructed to the requirements of ASME section III, Class 2. The remainder of the system is designed and constructed to the requirements of ASME Section III, Class 3, except for the portion that is not required to perform safety functions.

- The CCWS, in conjunction with the Essential Service Water System (ESWS) and the Ultimate Heat Sink (UHS), is capable of removing sufficient heat from the essential heat exchangers to ensure a safe reactor shutdown and cooling following a postulated accident coincident with a loss of offsite power and assuming one train is unavailable due to maintenance and a single active failure in a second train.

- The CCWS, in conjunction with the ESWS, is capable of maintaining the outlet temperature of the CCW heat exchanger below the limits of 110 °F during a design basis accident with loss of offsite power.

9.2.2.1.2 Power Generation Design Bases

The CCWS is designed to:

- Serve as an intermediate system between components containing radioactive fluids, which are cooled by the system, and the ESWS so as to prevent direct leakage of radioactive fluid into the environment through the ESWS.

- Provide sufficient cooling capacity for the components required during normal operating conditions such as normal power operation, normal shutdown and refueling as described below.

- Detect leakage of radioactive material into the system and control leakage of radioactive material out of the system. The Component Cooling Water system is subjected to the design objectives of RG 4.21, "Minimization of Contamination and Radioactive Waste Generation: Life-Cycle Planning" as it contains radioactive liquid. A discussion of the design objectives and operational programs to address these radiological aspects of the system is contained in DCD Section 12.3.1. System and component design features addressing RG 4.21 (Ref. 9.2.11-9) are summarized in Table 12.3-8.

- Prevent long term corrosion that may degrade system performance.

9.2.2.1.2.1 ~~Normal~~ Operation

Power

The CCWS is designed to transfer heat from the plant components required to support normal power operation with one train (pump and heat exchanger) unavailable due to online maintenance and a single active component failure. The CCWS is sized such that the component cooling water supply temperature to plant components is not more than 100°F. Normal operating heat loads are reactor coolant pump, charging pump, letdown heat exchanger, instrument air, spent fuel pool cooling heat exchanger, sample heat

As indicated in Table 9.2.2-6,

exchanger, seal water heat exchanger, blowdown sample cooler, B.A. evaporator, waste gas compressor, and so on. The CCWS provides sufficient surge tank capacity below the low level alarm to allow for operators to take action.

9.2.2.1.2.2 ~~Normal Plant Cooldown~~ Cooldown by CS/RHRS

The CCWS is designed to remove ~~both~~ decay and sensible heat from the core and the reactor coolant system in addition to some normal operating heat loads during the latter stages of plant cooldown~~.~~ , as indicated in Table 9.2.2-6, ~~The~~ component cooling water system is sized to reduce the temperature of the reactor coolant system from 350°F at approximately 4 hours after reactor shutdown to 140°F using 4 trains while maintaining the component cooling water supply below 110°F. Failure of one train of CCW with another train unavailable due to maintenance will not prevent achieving cold shutdown conditions. The CCWS continues to provide cooling water to the residual heat removal system throughout the shutdown after cooldown is complete.

9.2.2.1.2.3 Refueling

During refueling, cooling water flow is provided to spent fuel pool heat exchangers to cool the spent fuel pool~~.~~ , as indicated in Table 9.2.2-6, For a full core off-load cooling water is also supplied to a normal residual heat removal heat exchanger as part of spent fuel pool cooling. The CCWS maintains the spent fuel pit water temperature below 120°F. System operation is with both CCWS ~~divisions~~ subsystems available. The component cooling water supply temperature to plant components in the refueling mode is not more than 100°F

9.2.2.2 System Description

The system flow diagram is shown in Figure 9.2.2-1.

The CCWS is the closed loop system that functions as an intermediate system between the various components cooled by CCWS and the ESWS, (Subsection 9.2.1). The CCWS transfers heat and prevents direct leakage of the radioactive fluid from the components to the ESWS.

The CCWS consists of two independent subsystems. One subsystem consists of trains A & B, and the other subsystem consists of trains C & D, for a total of four trains. Each train has one CCWP and one CCW HX and provides 50% of the cooling capacity required for safety function.

Electrical power to the CCWS is supplied from Class 1E buses that are backed up by Class 1E power supply so that the system is capable to operate during a loss of off site power.

There is the header tie line between trains A and B, and between trains C and D. The header tie line in each subsystem branches into two loops. See Table 9.2.2-1 for the components supplied by each loop.

Each subsystem is served by one CCW surge tank. The CCW surge tank is installed at the highest point of the system to facilitate system air venting to ensure a water solid closed loop and to provide the net positive suction head at the CCWP suction. In addition,

exchanger, seal water heat exchanger, blowdown sample cooler, B.A. evaporator, waste gas compressor, and so on. The CCWS provides sufficient surge tank capacity below the low level alarm to allow for operators to take action.

9.2.2.1.2.2 Normal Plant Cooldown

The CCWS is designed to remove both decay and sensible heat from the core and the reactor coolant system in addition to some normal operating heat loads during the latter stages of plant cooldown. The component cooling water system is sized to reduce the temperature of the reactor coolant system from 350°F at approximately 4 hours after reactor shutdown to 140°F using 4 trains while maintaining the component cooling water supply below 110°F. Failure of one train of CCW with another train unavailable due to maintenance will not prevent achieving cold shutdown conditions. The CCWS continues to provide cooling water to the residual heat removal system throughout the shutdown after cooldown is complete.

9.2.2.1.2.3 Refueling

During refueling, cooling water flow is provided to spent fuel pool heat exchangers to cool the spent fuel pool. For a full core off-load cooling water is also supplied to a normal

9.2.2.1.2.4 Startup

The CCWS is designed to transfer heat from the plant components required to support plant startup with two trains in each subsystem in operation at the time of maximum heat load. The number of active CCWS trains is determined by the operating states of the components to be cooled and the temperature of the ESW supplied to the CCW heat exchangers. Potential CCWS users in this configuration are identified in Table 9.2.2-6. Heat loads for CCWS in the startup configuration reflect higher Excess Letdown and CS/RHR heat exchanger requirements; in addition, Letdown load is higher than power operation. The CCWS is sized such that the component cooling water supply temperature to plant components is not more than 100°F.

9.2.2.1.2.5 Accident

The CCWS is designed to transfer heat from the plant components required to support safety-related loads during accident conditions with one train in each subsystem in operation. The CCWS can operate two trains to remove the heat load during an accident condition even if a single failure occurs with one of four trains inoperable due to maintenance. As indicated in Table 9.2.2-6, changes to potential CCWS users in this configuration compared to power operation include the CS/RHR heat exchangers and shedding of some normal operation loads, The CCWS is sized such that the component cooling water supply temperature to plant components is not more than 125°F.

9.2.2.1.2.6 Safe Shutdown

The CCWS is designed to transfer heat from the plant components required to support safe shutdown with one train in each subsystem in operation. The CCWS can operate two trains to put the plant into safe shutdown even if a single failure occurs with one of four trains inoperable due to maintenance. As indicated in Table 9.2.2-6, potential users of CCWS in this configuration are the same as the accident configuration except that C/V atmosphere gas sample cooler is not required. The CCWS is sized such that the component cooling water supply temperature to plant components is not more than 125°F.

the highest point of the system to facilitate system air venting to ensure a water solid closed loop and to provide the net positive suction head at the CCWP suction. In addition,

the surge tank accommodates the thermal expansion and contraction of the cooling water and potential leakage into or out of the CCWS.

Demineralized quality water with corrosion inhibitors is circulated in the CCWS. No outside impurities are expected to be infiltrated in the system, therefore, the CCW filter is not necessary. The impacts of non-safety related SSC failures in the CCW system will not adversely affect safety-related SSCs to perform their safety related function since the direct impact of a pipe break in the non-safety portion of the system can be accommodated. The CCW system's safety function will be maintained as a result of the nonsafety-related piping failure, and the indirect impact of the pipe break will not impact any SSC safety function.

9.2.2.2.1 Component Descriptions

The CCWS components are described below. Design parameters for major components of CCWS are provided in Table 9.2.2-2.

9.2.2.2.1.1 CCW HX

The CCW HXs transfer heat from the CCWS to the ESWS. The CCW HXs are plate type. The CCW HXs are designated quality group C as defined in Regulatory Guide 1.26 (Ref. 9.2.11-3), seismic category I, and are designed in accordance with the requirements of the ASME Section III, class 3.

9.2.2.2.1.2 CCWP

Th
C
Th
m
Th
ca
III,
Th
ba
th
Th
NF
9.
Th
ac
lea

Heat exchangers are designed to remove heat loads associated with all modes of operation. The "design" condition is associated with CCW and ESW flow rates of 11000 gpm, a maximum CCWS design outlet temperature is 100°F and maximum cooling water inlet temperature from ESWS is 95°F. At the design condition, the heat removal capacity of each CCWS heat exchanger is 50 x 10^6 Btu/hr.

The heat exchangers are sized to provide cooling water no greater than 100°F during normal operation, no greater than 110°F during shutdown operation and no greater than 125°F during accident and safe shutdown conditions. The assumed ESWS temperature is 95°F for all operating condtions. Heat exchanger fouling factors are in accordance with manufacturer's standards and the system water chemistry.

The CCWS plate-type heat exchanger "design" heat removal capacity of 50 x 10^6 BTU/hr allows removal of the normal operating heat load using two heat exchangers. The design heat load is determined by summing individual user requirements, which are listed in Table 9.2.2-6. The heat load from the SFP is based on the decay heat for the design SFP loading as described in Section 9.1.3.1, calculated by ANSI/ANS 5.1; the decay heat predicted by ANSI/ANS 5.1 is larger than ORIGEN 2.2 output. Thus, the SFP heat exchanger heat load shown in Table 9.2.2-6 used for CCWS design is conservative by about 6x10^6 Btu/hr in comparison to ORIGEN 2.2 predictions. As a result, there is a net 10% margin in the CCWS design heat removal capacity due to the conservatism in the SFP heat exchanger load. In addition, vendor design margin for the heat exchanger area is a minimum of 20% over the area associated with the design heat removal capacity.

Actual heat exchanger performance based on these design considerations will reflect the temperature differential across the heat exchange surface (ΔT) and the product of the overall heat exchange coefficient and heat exchange area (UA). The heat exchange area, A, is not dependent on the CCWS operating mode; however, U and ΔT will change due to changes in flow rate or temperature conditions in each heat exchange configuration. Tables 9.2.2-4 and 9.2.2-5 provide heat loads and flow rates, respectively, for various CCWS operating modes.

Data

Table 9.2.2-2 Component Cooling Water System Component Design ~~Date~~

Component Cooling Water Pump		
Quantity	4	
Type	horizontal centrifugal	
Design flow rate	12,000 gpm	
Design head	180 ft	
Design pressure	200 psig	
Design temperature	200 ^{0} F	
Component Cooling Water Heat Exchanger		
Quantity	4	
Type	Plate type	
Plate Material	Ti	
Heat transfer rate	50.0x 10^6 Btu/hr	
	CCW side	ESW side
Design flow rate	11,000 gpm	11,000 gpm
Design pressure	200 psig	150 psig
Design Temperature	200 ^{0} F	140 ^{0} F
Design Inlet temperature	-	95 ^{0}F
Design outlet temperature	100 ^{0}F	-
Component Cooling Water Surge Tank		
Quantity	2	
Type	Horizontal	
Capacity	283 ft ^{3}	
Design pressure	50 psig	
Design temperature	200 ^{0} F	

UA

$10.0x10^6$ Btu/°F-hr

Table 9.2.2-4 Component Cooling Water system Heat Load Unit of Heat Load [×106Btu/hr]

Train	Normal Power Operation	Cooldown by CS/ RHRS	Accident	Safe Shutdown
A & B	0.2	181.8	138.7	167.9
A1	25.6	14.3	23.0	23.0
A2	24.2	24.2	0.0	0.0
Subtotal	50.0	220.3	161.7	190.9
C & D	0.2	181.8	138.7	167.9
C1	25.6	14.3	23.0	23.0
C2	15.5	25.1	0.0	0.0
Subtotal	41.3	221.2	161.7	190.9
The total number of operating CCW HXs	2	4	2	2

Table 9.2.2-5 Component Cooling Water system Flow Balance Unit of Flow Rate [gpm]

Train	Normal Power Operation	Cooldown by CS/ RHRS	Accident	Safe Shutdown
A & B	600	9400	4700	4700
A1	4575	4575	4575	4575
A2	1988	1988	310	310
Subtotal	7163	15963	9585	9585
C & D	600	9400	4700	4700
C1	4575	4575	4592	4575
C2	925	1490	0.0	0.0
Subtotal	6100	15465	9292	9275
The total number of operating CCW pumps	2	4	2	2

Table 9.2.2-4 Component Cooling Water System Heat Load [×10^{6}Btu/hr]

Header		Startup		Power Operation		Refueling		Cooldown by CS/RHRS		Accident		Safe Shutdown	
A or B		10.5		0.2		15.7		181.8		138.7		167.9	
A1		25.6		25.6		25.4		14.3		23.0		23.0	
A2		29.4		24.2		21.6		24.2		0.0		0.0	
Number of operating CCW HXs	Total heat load	2	65.5	1	50.0	2	62.7	2	220.3	1	161.7	1	190.9
C or D		10.5		0.2		15.6		181.8		138.7		167.9	
C1		25.6		25.6		25.4		14.3		23.0		23.0	
C2		25.1		15.5		0.9		25.1		0.0		0.0	
Number of operating CCW HXs	Total heat load	2	61.2	1	41.3	1	41.9	2	221.2	1	161.7	1	190.9

Note 1: If one subsystem is unavailable, (e.g., one train is unavailable due to on-line maintenance and a single failure occurs in the other train of that subsystem), the operator will open the RCP header tie line isolation valves to provide cooling from the operating subsystem to the RCP thermal barriers of the unavailable subsystem. The additional heat load from the two RCP thermal barriers is 2.5 x 10^6 Btu/h placed on the operating subsystem.

Table 9.2.2-5 Component Cooling Water System Flow Balance [gpm]

Header		Startup		Power Operation		Refueling		Cooldown by CS/RHRS		Accident		Safe Shutdown	
A or B		5000		600		5000		9400		4700		4700	
A1		4575		4575		3795		4575		4575		4575	
A2		2262		1988		1988		1988		310		310	
Number of operating CCW pumps	Total flow rate	2	11837	1	7163	2	10783	2	15963	1	9585	1	9585
C or D		5000		600		5000		9400		4700		4700	
C1		4575		4575		3795		4575		4592		4575	
C2		1490		925		190		1490		0.0		0.0	
Number of operating CCW pumps	Total flow rate	2	11065	1	6100	1	8985	2	15465	1	9292	1	9275

Note 1: If one subsystem is unavailable, (e.g., one train is unavailable due to on-line maintenance and a single failure occurs in the other train of that subsystem), the operator will open the RCP header tie line isolation valves to provide cooling from the operating subsystem to the RCP thermal barriers of the unavailable subsystem. The flow rate required to the two RCP thermal barriers is 80 gpm from the operating subsystem.

RESPONSE TO REQUEST FOR ADDITIONAL INFORMATION

7/29/2011

US-APWR Design Certification

Mitsubishi Heavy Industries

Docket No. 52-021

RAI NO.:	**NO. 571-4365 REVISION 0**
SRP SECTION:	**09.02.02 – REACTOR AUXILIARY COOLING WATER SYSTEM**
APPLICATION SECTION:	**9.2.2**
DATE OF RAI ISSUE:	**4/13/2010**

QUESTION NO.: 09.02.02-53
Follow-up to RAI 362-2278, question 09.02.02-29

Original question
The component cooling water system (CCWS) must be capable of removing heat from systems, structures and components (SSCs) important to safety during normal operating and accident conditions over the life of the plant in accordance with General Design Criterion (GDC) 44 requirements. The Design Control Document (DCD) system description does not adequately explain the basis for sizing the CCWS pumps. Considerations that need to be addressed include head losses in the cooling water inlet piping based on full power flow conditions, fluctuations in the supplied electrical frequency, increased pipe roughness due to aging and fouling, fouled filters (if added), maximum pressure drop through the system heat exchangers, and the actual amount of excess margin that is provided by the CCWS pump design including the basis for this determination. In order for the staff to confirm that the CCWS pumps have been adequately sized, the applicant needs to include additional information in Tier 2, DCD Section 9.2.2 to address these considerations.

Follow-up question
Based on the staff's review of the applicant's response to RAI 09.02.02-29, the following item should be addressed:

The intent of the RAI was to solicit a full presentation of the details of the design process and parameters. The brief addition provided in the response has insufficient detail and did not proved the amount of excess margin for the CCWS pump design or state that the full power flow condition were bounding. The applicant is asked to include a description of the design process and quantitative design parameters.

Reference: MHI's Responses to US-APWR DCD RAI No. 362-2278; MHI Ref: UAP-HF-09333; dated June 19, 2009; ML091760624.

ANSWER:

The design head and flow rate of the CCWS pumps are provided in DCD Table 9.2.2-2. The design head is calculated based on supplying cooling water to the RCP thermal barriers, which is the line having the severest pressure loss. The pumps have a design head of 180 ft which ensures a minimum of 5% margin over the head required to account for the pressure loss in this line at the design flow rate. The design flow rate of 12,000 gpm is larger than that required for any CCWS operational mode, as indicated in Table 9.2.2-5. The attached head-flow curve illustrates the CCWS operating points with respect to the pump design values. The 12,000 gpm design flow rate for the CCWS pumps is based on a 20% margin above the highest required flow rate (accident condition = 9,585 gpm) rounded upwards. Additional description of CCWS pump margins will be added to the DCD.

Impact on DCD

DCD Tier 2 Subsection 9.2.2.2.1.2 will be revised as follows:

- Add summary description of CCWS head, flow margin.

Impact on R-COLA
There is no impact on the R-COLA.

Impact on S-COLA
There is no impact on the S-COLA.

Impact on PRA
There is no impact on the PRA.

Attachment Q9.2.2-53 Response

US-APWR CCWP
Spec. 12000gpm×180ft

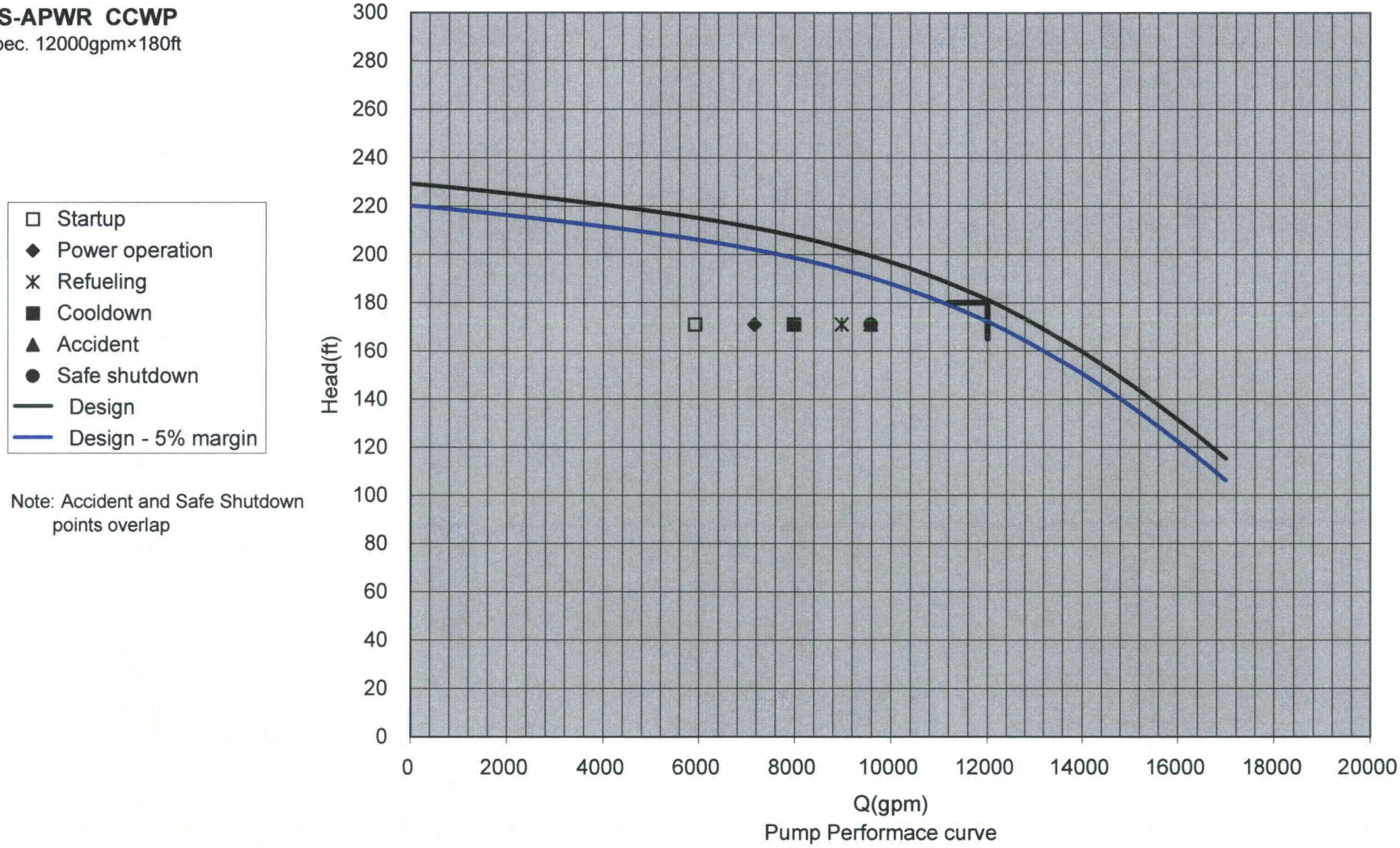

Note: Accident and Safe Shutdown points overlap

Pump Performace curve

the surge tank accommodates the thermal expansion and contraction of the cooling water and potential leakage into or out of the CCWS.

Demineralized quality water with corrosion inhibitors is circulated in the CCWS. No outside impurities are expected to be infiltrated in the system, therefore, the CCW filter is not necessary. The impacts of non-safety related SSC failures in the CCW system will not adversely affect safety-related SSCs to perform their safety related function since the direct impact of a pipe break in the non-safety portion of the system can be accommodated. The CCW system's safety function will be maintained as a result of the nonsafety-related piping failure, and the indirect impact of the pipe break will not impact any SSC safety function.

9.2.2.2.1 Component Descriptions

The CCWS components are described below. Design parameters for major components of CCWS are provided in Table 9.2.2-2.

9.2.2.2.1.1 CCW HX

The CCW HXs transfer heat from the CCWS to the ESWS. The CCW HXs are plate type. The CCW HXs are designated quality group C as defined in Regulatory Guide 1.26 (Ref. 9.2.11-3), seismic category I, and are designed in accordance with the requirements of the ASME Section III, class 3.

9.2.2.2.1.2 CCWP

The CCWP circulates cooling water through the CCW HX and the components cooled by CCWS.

The pumps are horizontal centrifugal pumps and driven by an ac powered induction motor.

The pumps are designated quality group C as defined in Regulatory Guide 1.26, seismic category I, and are designed in accordance with the requirements of the ASME Section III, class 3.

The pumps are designed in consideration of head losses in the cooling water inlet piping based on full power flow conditions, increased pipe roughness, maximum pressure drop through the system heat exchangers, and the actual amount of excess margin etc.

The surge tanks are located at a higher elevation than the pumps to ensure sufficient

The design head and flow rate of the CCWS pumps are provided in Table 9.2.2-2. The design head is calculated based on supplying cooling water to the RCP thermal barriers, which is the line having the most severe pressure loss. The pumps have a design head of 180 ft which ensures a minimum of 5% margin over the head required to account for the pressure loss of this line at the design flow rate. The design flow rate of 12,000 gpm is at least 20% larger than that required for any CCWS operational mode, as indicated in Table 9.2.2-5.

he surge tank
ter and potential
tive surge line.

RESPONSE TO REQUEST FOR ADDITIONAL INFORMATION

7/29/2011

US-APWR Design Certification

Mitsubishi Heavy Industries

Docket No. 52-021

RAI NO.:	**NO. 571-4365 REVISION 0**
SRP SECTION:	**09.02.02 – REACTOR AUXILIARY COOLING WATER SYSTEM**
APPLICATION SECTION:	**9.2.2**
DATE OF RAI ISSUE:	**4/13/2010**

QUESTION NO.: 09.02.02-54
Follow-up to RAI 362-2278, question 09.02.02-30

Based on the staff's review of the applicant's response to RAI 09.02.02-30, the following items should be addressed for items 1 through 4:

Describe the heat loads for individual components (only header heat loads were provided). Describe key assumptions for heat exchanger heat loads. Alternatively, bounding headloads could be provided or calculations could be made available for staff audit.

Describe the flow rates for all safety related or major loads. Describe key assumptions for flow rates or as an alternative, bounding flow rates could be provided or calculations could be made available for staff audit. The flows to these systems are directly relevant to the issue of the design of the CCWS and the data should be compiled in Section 9.2.2. Address the adequacy of two 50 x 106 BTU/Hr CCWS heat exchangers which can remove 190.0 x 106 BTU/Hr during safe shutdown conditions.

Provide a description of the heat load and flow rate differences between accident and safe shutdown.

Explain how the minimum required CCWS flow to the CCWS heat exchanger was determined.

Provide flow rates for the CCWS motor cooler or alternatively, provide bounding flow rates.

There is a possible flow rate error for header A2 on Table 9.2.2-5. Under accident conditions, heat loads for header A2 (Table 9.2.2-4) is zero but A2 flow rates is 310 GPM (Table 9.2.2-5). Provide an explanation for this flow rate of 310 GPM or provide a correction to Table 9.2.2-5.

Item 5: For the containment spray heat exchanger outlet valve, explain the basis for why the valves have to be closed initially while in system standby and explain if this valve provides CCWS pump minimum flow protection with the cross connect valves closed. In addition, the text added as part of Revision 2 of the Tier 2 DCD was slightly different from the text provided as a DCD markup to Section 9.2.2.2.1.5 and the words "at once" were added by the RAI response to RAI 09.02.02-36. Determine which DCD markup is correct (between RAI 09.02.02-36 and RAI 09.02.02-30 responses).

Reference: MHI's Responses to US-APWR DCD RAI No. 362-2278; MHI Ref: UAP-HF-09333; dated June 19, 2009; ML091760624.

ANSWER:
Items 1 through 4:

As indicated in the RAI question, DCD Tables 9.2.2-4 and 9.2.2-5 provide information on header heat loads. In response to Q9.2.2-52, DCD Tables 9.2.2-4 and 9.2.2-5 will be updated to reflect header flow rates and heat loads for all CCWS operating configurations. In response to Q9.2.2-51, new Figure 9.2.2-2 (Sheets 1 through 6) will be added to the DCD; the figures provide detailed pressure, temperature and flow information. New Table 9.2.2-6 will be added to provide loads for each CCWS user (including the CCWS motor cooler) and for each plant operating configuration that is shown in Figure 9.2.2-2. The flow rates provided in Tier 2 Figure 9.2.2-2 are the minimum flow rates required for heat removal from each CCWS user.

The response to Q9.2.2-52 discusses the adequacy of the heat exchanger "design" capacity of 50 x 10^6 Btu/hr to accomplish the necessary heat removal for all CCWS operating configurations.

The difference between the flow rates at the time of accident and safe shutdown is due to water flow for the C/V atmosphere gas sample cooler. The C/V atmosphere gas sample cooler is used for sampling the atmosphere inside the containment during an accident and is not required for safe shutdown. On the other hand, the difference between accident and safe shutdown heat loads is due to the difference in heat load both from the C/V atmosphere gas sample cooler and CS/RHR Hx. Under accident conditions (e.g., LOCA), significant sensible heat is removed by the RHRS through the CCW System as well as other operating safety systems (Safety Injection and Containment Spray). For safe shutdown as described in Tier 2 DCD Subsection 5.4.7.2.3.4, all heat removal is through the RHRS to the CCWS. The response to Question 9.2.2-51 provided new Figure 9.2.2-2, which includes detailed flow information. CCWS user loads are provided with this response as a new Table 9.2.2-6.

Item 5:
Circulation through the CS/RHR heat exchanger while they are in the standby mode is undesirable in that it would significantly increases the flow and hence the power drawn by the CCW pumps and would be an overall plant inefficiency. Therefore, the containment spray heat exchanger outlet valves are closed while the RHR System is in standby. These valves play no role in CCW pump minimum flow protection.

The phrase "at once" is inexact and will be deleted from Tier 2 DCD Subsection 9.2.2.2.1.5. However, as indicated in the response to Question 9.2.2-48, the automatic isolation signals to the header tie line valves (NCS-MOV-020A/B/C/D and NCS-MOV-007A/B/C/D) will be removed. Thus, this change is superseded by the markup provided with Question 9.2.2-48.

Impact on DCD

DCD Tier 2 Subsection 9.2.2.2.2 will be revised as follows:

- Add description that Tables 9.2.2-4 and 9.2.2-5 provide header information.
- Add reference to new Table 9.2.2-6 for specific CCWS loads.
- Add new Table 9.2.2-6

Impact on R-COLA
There is no impact on the R-COLA.

Impact on S-COLA
There is no impact on the S-COLA.

Impact on PRA
There is no impact on the PRA.

9.2.2.2.2 System Operations

Table 9.2.2-4 and 9.2.2-5, respectively, provide heat loads and water flow balance for various operating modes~~.~~ **; the tables provide CCWS headers values as well as the number of operating trains. Table 9.2.2-6 provides heat loads for specific CCWS users for the various operating modes. Figure 9.2.2-2 provides system operating parameters for various locations and operating modes.**

9.2.2.2.2.1 Normal Power Operati

During normal operation, at least one train total of two CCWP and two CCW HXs are is trains A or B and trains C or D.

During this operating condition, an operating CCWP in each subsystem supplies CCW to all loops in the particular subsystem with cooling water temperature not exceeding 100 °F maximum.

CCWPs which are not in service are placed in standby and automatically start upon a low pressure signal of CCW header pressure.

9.2.2.2.2.2 Normal Plant Shutdown

After approximately four hours of normal plant cool down, when the reactor coolant temperature and pressure are reduced to approximately 350 °F and 400 psig, the standby CCW HXs and pumps are placed in service resulting in four trains (i.e. four CCWPs and four CCW HXs) in operation. The CCWS isolation valve for each of the CS/RHR HXs is opened to supply cooling water to these HXs.

The failure of one cooling train (i.e. failure in one pump or one HX) increases the time for plant cool down, however, it does not affect the safe operation of the plant. The plant can be safely brought to the cold shutdown condition with a minimum of two trains.

During plant cool down by the residual heat removal system, the CCW supply temperature to the various components is permitted to increase to 110 °F.

9.2.2.2.2.3 Refueling

During refueling, the required number of CCW HXs and pumps is determined by the heat load. Normally, three trains operate in this mode. The remaining train may be taken out of service for maintenance. An operating CCWP in each subsystem supplies CCW to all loops in service in the particular subsystem with a maximum CCW supply water temperature not exceeding 100 °F.

9.2.2.2.2.4 Loss of Coolant Accident

All CCWP are automatically actuated by ECCS actuation signal. The start signal to the pumps is delayed. (Refer to Figure 8.3.1-2 Logic diagrams (Sheet 18 of 24)) The isolation valves for the CS/RHR HXs are automatically opened by the ECCS actuation signal and the same train CCWP start signal. The header tie line isolation valves are closed by an ECCS actuation signal in coincidence with an undervoltage signal, and the CCWS is separated into four individual trains (A, B, C and D). The header tie line isolation

Table 9.2.2-6 Component Cooling Water System User Loads (1 of 5)

Header	Component	Heat Load ($x10^6$ BTU/Hr) (total for the number of operating components)	Number of Operating Components	Operating Mode
	CCW pump motor	0.3	2	Startup Refueling Cooldown by CS/RHRS
		0.2	1	Power operation Accident Safe shutdown
	CS/RHR heat exchanger	9.7	1	Startup
		0.0	0	Power operation
		14.9	1	Refueling
		180.5	2	Cooldown by CS/RHRS
		137.2	1	Accident
		166.4	1	Safe shutdown
	CS/RHR pump	0.0	0	Power operation
		0.5	1	Startup Refueling Accident Safe shutdown
		1.0	2	Cooldown by CS/RHRS
	SI pump	0.0	0	Startup Power operation Refueling Cooldown by CS/RHRS
A or B		0.8	1	Accident Safe shutdown

Table 9.2.2-6 Component Cooling Water System User Loads (2 of 5)

Header	Component	Heat Load ($x10^6$ BTU/Hr) (total for the number of operating components)	Number of Operating Components	Operating Mode
	CCW pump motor	0.3	2	Startup Cooldown by CS/RHRS
		0.2	1	Power operation Refueling Accident Safe shutdown
	CS/RHR heat exchanger	9.7	1	Startup
		0.0	0	Power operation
		14.9	1	Refueling
		180.5	2	Cooldown by CS/RHRS
		137.2	1	Accident
		166.4	1	Safe shutdown
	CS/RHR pump	0.0	0	Power operation
		0.5	1	Startup Refueling Accident Safe shutdown
		1.0	2	Cooldown by CS/RHRS
	SI pump	0.0	0	Startup Power operation Refueling Cooldown by CS/RHRS
C or D		0.8	1	Accident Safe shutdown

Table 9.2.2-6 Component Cooling Water System User Loads (3 of 5)

Header	Component	Heat Load ($x10^6$ BTU/Hr) (total for the number of operating components)	Number of Operating Components	Operating Mode
	SFP Heat Exchanger	20.3	1	Startup Power operation Accident Safe shutdown
		25.4	1	Refueling
		10.6	1	Cooldown by CS/RHRS
	Sample heat exchanger	0.2	1	Startup Power operation Cooldown by CS/RHRS Accident Safe shutdown
		0.0	0	Refueling
	RCP thermal barrier	1.2	2	Startup Power operation Cooldown by CS/RHRS
		0.0	0	Refueling
		2.5	2	Accident Safe shutdown
	RCP motor	3.2	2	Startup Power operation
		1.6	1	Cooldown by CS/RHRS
		0.0	0	Refueling Accident Safe shutdown
	Charging pump	0.7	1	Startup Power operation Cooldown by CS/RHRS
A1		0.0	0	Refueling Accident Safe shutdown

Table 9.2.2-6 Component Cooling Water System User Loads (4 of 5)

Header	Component	Heat Load ($x10^6$ BTU/Hr) (total for the number of operating components)	Number of Operating Components	Operating Mode
	SFP heat exchanger	20.3	1	Startup Power operation Accident Safe shutdown
		25.4	1	Refueling
		10.6	1	Cooldown by CS/RHRS
	Sample heat exchanger	0.2	1	Startup Power operation Cooldown by CS/RHRS Accident Safe shutdown
		0.0	0	Refueling
	C/V atmosphere gas sample cooler	0.012	1	Accident
		0.0	0	Startup Power operation Refueling Cooldown by CS/RHRS Safe shutdown
	RCP thermal barrier	1.2	2	Startup Power operation Cooldown by CS/RHRS
		0.0	0	Refueling
		2.5	2	Accident Safe shutdown
	RCP motor	3.2	2	Startup Power operation
		1.6	1	Cooldown by CS/RHRS
		0.0	0	Refueling Accident Safe shutdown
C1	Charging pump	0.7	1	Startup Power operation Cooldown by CS/RHRS
		0.0	0	Refueling Accident Safe shutdown

Table 9.2.2-6 Component Cooling Water System User Loads (5 of 5)

Header	Component	Heat Load ($x10^6$ BTU/Hr) (total for the number of operating components)	Number of Operating Components	Operating Mode
A2	IA compressor	0.9	1	Startup Power operation Refueling Cooldown by CS/RHRS
		0.0	0	Accident Safe shutdown
	Seal water heat exchanger	1.8	1	Startup Power operation Cooldown by CS/RHRS
		0.0	0	Refueling Accident Safe shutdown
	BD sample cooler	0.8	4	Startup Power operation Cooldown by CS/RHRS
		0.0	0	Refueling Accident Safe shutdown
	Excess Letdown heat exchanger	5.2	1	Startup
		0.0	0	Power operation Refueling Cooldown by CS/RHRS Accident Safe shutdown
	Non safety-related components in Auxiliary Building	20.7	-	Startup Power operation Refueling Cooldown by CS/RHRS
		0.0	-	Accident Safe shutdown
C2	IA compressor	0.9	1	Startup Power operation Refueling Cooldown by CS/RHRS
		0.0	0	Accident Safe shutdown
	Letdown heat exchanger	14.6	1	Power operation
		24.2	1	Startup Cooldown by CS/RHRS
		0.0	0	Refueling Accident Safe shutdown

Note: "Non safety-related components in Auxiliary Building" is a summary of several loads; the largest is the Boric Acid Evaporator

RESPONSE TO REQUEST FOR ADDITIONAL INFORMATION

7/29/2011

US-APWR Design Certification

Mitsubishi Heavy Industries

Docket No. 52-021

RAI NO.:	**NO. 571-4365 REVISION 0**
SRP SECTION:	**09.02.02 – REACTOR AUXILIARY COOLING WATER SYSTEM**
APPLICATION SECTION:	**9.2.2**
DATE OF RAI ISSUE:	**4/13/2010**

QUESTION NO.: 09.02.02-55
Follow-up to RAI 362-2278, question 09.02.02-31

Based on the staff's review of the applicant's response to RAI 09.02.02-31, the following items should be addressed for items 1, 3 and 4:

Item 1: The text provided by the applicant is not well written and is confusing; therefore, should be corrected in the DCD.

- Describe in the DCD detailed discussion of the MCR controls, permissives and interlocks associated with the header isolation.
- Describe in the DCD a COL Information Item related to the development of procedures (including time durations) for conditions that allow the operator to override an automatic action to reopen the closed the header valves post S+UV or P.
- Section 9.2.2.2.2.6, "Water Hammer Prevention," states that system valves are slow acting; however, Section 9.2.2.2.1.5, "Valves" indicates the header tie line isolation valves will automatically close in about 10 seconds. Provide clarification in the DCD for these two sections (slow acting valves verses 10 second valve closure).

Item 3: Describe in the DCD that the 24" diameter valves which close in less than 10 seconds have been adequately reviewed against water hammer.

Item 4: Valve seat leakage should be discussed in Section 9.2.2 of the Tier 2 DCD and the seat leakage should be limited to a specific maximum amount in the closed position for fulfillment of their required function (ASME OM Code – IST Category A).

Reference: MHI's Responses to US-APWR DCD RAI No. 362-2278; MHI Ref: UAP-HF-09388; dated July 16, 2009; ML092080393.

ANSWER:

Items 1 and 3: Tier 2 Subsection 9.2.2.2.1.5 will be revised for clarity. The closure time editorial error has been corrected in DCD Revision 3 (submitted to the NRC on 31 March 2011 via UAP-HF-11078) to "within 30 seconds". The longer, maximum 30-second closure time of the cross-connect valves reduces the probability of water hammer occurrence. MHI will add a

discussion to DCD Tier 2 Subsection 9.2.2.2.1.5 that water hammer is prevented by the relatively slow valve closure time. This discussion will be provided in the response to Question 9.2.2-48, which includes additional Subsection 9.2.2.2.1.5 markups. To correspond with these changes, Subsection 14.2.12.1.87 was expanded in DCD Revision 3 to specify the testing of the cross-connect valve closure time consistent with Subsection 9.2.2.2.1.5; verification that no water hammer effects are detected will also be added to Subsection 14.2.12.1.87.

Item 1: As indicated in the response to Question 9.2.2-48, the automatic isolation of the header tie line isolation valves has been removed. The interlocks associated with this isolation have been deleted. Thus, additional changes associated with this question are not required.

Item 4: Section 9.2.2 will be revised to address valve leakage assumptions and bases. Section 9.2.2 will also be revised to address makeup capacity, which is large in comparison to valve leakage. Please see the response to Question 9.2.2-49 for this discussion.

Impact on DCD

DCD Tier 2, Subsection 14.2.12.1.87 will be revised as follows with regard to CCWS header tie line isolation valves:

- Add testing and verification that no water hammer effects are detected.
- Delete actuation logic testing

DCD Tier 2, Subsection 14.2.12.1.87 will be revised as follows:

- Replace "RWS" with "FSS"

Impact on R-COLA
There is no impact on the R-COLA.

Impact on S-COLA
There is no impact on the S-COLA.

Impact on PRA
There is no impact on the PRA.

2. To demonstrate the capability of the CCW system to provide cooling water during normal operation, normal cooldown, and postulated loss-of-coolant accident (LOCA) modes of operation.

3. To verify operation of system valves and control circuitry.

4. To demonstrate the operation and verify the operating characteristics of the CCW pumps.

B. Prerequisites

1. Required construction testing is completed.

2. Component testing and instrument calibration is completed.

3. Test instrumentation is available and calibrated.

4. Required support systems are available.

5. Demineralized water is available for system makeup.

6. The CCW is aligned to cool the CCW motors.

7. The ESWS is available to CCW heat exchangers.

8. CCWS is filled and vented.
9. Temporary test instrumentation is installed.

C. Test Method

1. The control circuitry of the CCW pumps, surge tanks, and valves is verified.

2. The CCW system pumps are operated, and performance characteristics verified.

3. System flows are balanced, as required, and then verified in each mode of operation. Cavitation is not present in the area of butterfly throttle valves. Testing includes verification of coolant flow to the thermal barrier via cross-tie.

4. The cooling ability of the CCW system is verified during RCS heatup and cooldown in conjunction with the RHRS during the hot functional test.

5. CCW surge tank vent valve closure logic is verified using a simulated high CCW radiation monitor condition.

6. The thermal barrier heat exchanger cooling water return line isolation valve logic is verified using a simulated reactor coolant pump thermal barrier heat exchanger cooling water high flow condition.

Not used

7. ~~The CCW header tie line isolation valves' closure logic is verified to be consistent with Subsection 9.2.2.2.1.5 using simulated signals. Valve response to ESF actuation signals may be verified via other tests (e.g., Subsection 14.2.12.1.55, ECCS Actuation and Containment Isolation Logic Preoperational Test).~~

9. When a CCW header tie line isolation valve is manually closed from the MCR, monitor for the occurrence of water hammer, vibration and noise.

8. The CCW header tie line isolation valv
with Subsection 9.2.2.2.1.5.

~~9~~. Demonstrate the ability to provide makeup water and verify flow to each pressurized CCW surge tank using DWS, PMWS and ~~RWS~~ supplies.

10.

FSS

D. Acceptance Criteria

1. The tank alarms and interlocks operate as designed.

2. The performance characteristics of the CCW pumps are within design specifications (Subsection 9.2.2)

3. Components that are supplied with CCW receive flows that are within the design specifications in each of the operating modes including the supply of coolant flow to the thermal barrier via cross-tie.

4. The pump control and interlocks operate as designed.

5. CCW system performance characteristics are within design specifications.

9. Water hammer does not affect CCW piping when a CCW header tie line isolation valve is closed.

6. CCW surge ates as described in Subsection

7. The thermal barrier heat exchanger cooling water return line isolation valve logic operates as described in Subsection 9.2.2.5.5.

8. The CCW header tie line isolation valves' ~~closure logic and~~ closure time are consistent with Subsection 9.2.2.2.1.5.

~~9~~. The ability to provide makeup water to each pressurized CCW surge tank using DWS, PMWS and ~~RWS~~ supplies is demonstrated.

10.

FSS

14.2.12.1.88 Turbine Component Cooling Water System Preoperational Test

A. Objective

1. To verify that the system components perform their function of supplying adequate cooling water to the designated turbine building components, as described in Subsection 9.2.8.

B. Prerequisites

1. Required construction testing is completed.

2. Component testing and instrument calibration is completed.

3. Test instrumentation is available and calibrated.

RESPONSE TO REQUEST FOR ADDITIONAL INFORMATION

7/29/2011

US-APWR Design Certification

Mitsubishi Heavy Industries

Docket No. 52-021

RAI NO.:	**NO. 571-4365 REVISION 0**
SRP SECTION:	**09.02.02 – REACTOR AUXILIARY COOLING WATER SYSTEM**
APPLICATION SECTION:	**9.2.2**
DATE OF RAI ISSUE:	**4/13/2010**

QUESTION NO.: 09.02.02-56
Follow-up to RAI 362-2278, question 09.02.02-32

Based on the staff's review of the applicant's response to RAI 09.02.02-32, the following items should be addressed.

- Describe the bases for the design arrangement and any operator time restraints for getting this cross-tie aligned.
- Describe any COL information items related to procedures and controls for this abnormal lineup which ties together four safety trains.
- Describe how quickly this line up would be made available since the four locked closed valves would have to be unlocked (locked closed tags would have to be cleared and then four breakers need to be reclosed in the field).
- Describe the main control room controls for the valves.
- Describe the conditions or Technical Specification Modes for when these cross tie valves would be allowed to be opened.
- Describe the Technical Specification LCO when in this lineup and describe the consequences to the operating CCWS divisions.
- Describe the relevant failure modes and effects analysis for this operation.
- Describe any special valve leakage requirements for MOV-234A/B and VLV-231A/B to ensure system flow requirements are maintained to the RCPs.

Reference: MHI's Responses to US-APWR DCD RAI No. 362-2278; MHI Ref: UAP-HF-09333; dated June 19, 2009; ML091760624.

ANSWER:

The RCP cross ties are required to be opened within 10 minutes only when one of the four trains of CCW are isolated for maintenance and there is a failure in the operating train of that subsystem. If CCW flow is lost and cannot be restored within 10 minutes, the RCPs will be tripped following a reactor trip. (Note: If loss of CCW should occur, seal injection flow continues to be provided to the RCP. Seal injection flow is sufficient to prevent seal damage even with a loss of thermal barrier cooling. However, loss of CCW to a RCP motor bearing oil cooler will result in a high temperature trip of the RCP motor cooler. Ref. Tier 2 DCD Subsection 5.4.1.3.4). The RCP cross tie valves (NCS-MOV-232A/B, 233A/B, and 234A/B), are motor-operated and can be

remotely operated from the MCR. Because these valves are slow open and close (greater 30 seconds), potential water hammer can be avoided. The open/close positions of the valves are displayed in the MCR. Isolation for maintenance is a planned evolution to be conducted in accordance with the procedure required above. Because LCO 3.7.7 requires that three trains of CCW be operable, system maintenance in this alignment must be completed in accordance with the Technical Specification. (Note: Opening the RCP cross tie valves occurs only if two trains of a subsystem are unavailable. Thus, LCO 3.7.7 is applicable under this configuration.) There are no special leakage requirements or controls. Because there are two isolation valves on the RCP CCW tie line which are normally closed, "Locked Closed" is not required. Therefore, MHI will delete the "LC" designation of the RCP cross-tie line isolation valves in Figure 9.2.2-1. The revised Figure 9.2.2-1 provided in response to Question 9.2.2-69 includes this change.

Tier 2 DCD Subsections 9.2.2.2.2.1 will be revised to provide additional detail regarding RCP cross-tie operation and add a statement that procedures for operation with one CCW train isolated for maintenance is within the scope of Operating and Maintenance procedures addressed in Subsection 13.5.2. In addition, MHI will describe (through text and/or figure) valve number and valve position of RCP cross-tie line isolation valves.

Tier 2 DCD Table 9.2.2-3 will be revised to provide the relevant failure modes and effects analysis for the RCP cross-tied operation. The revised Table 9.2.2-3 provided in response to Question 9.2.2-58 includes this change.

Tier 2 DCD Tables 9.2.2-4 and 9.2.2-5 will be revised to provide information on the operational configuration involving use of an RCP cross-tie line. The revised tables will be provided in the response to Question 9.2.2-54.

Check valves will be added to the In-service testing (IST) program. (Valves NCS-MOV-232A/B, 233A/B, and 234A/B are already included.)

Impact on DCD

<u>DCD Tier 2 Table 3.9-14 will be revised as follows:</u>

- Add check valves NCS-VLV-231A and B

<u>DCD Tier 2 Subsection 9.2.2.2.1.5 will be revised as follows:</u>

- Add RCP CCW tie line isolation valve numbers to heading.
- Add additional description regarding supply and return path.
- Add RCP CCW supply and return line isolation valve numbers to heading.
- Modify description regarding effect of opening RCP CCW tie line isolation valves.
- Modify description of "RCP CCW supply line isolation valve" to delete "P" signal isolation.
- Modify description of "RCP CCW return line isolation valve" to clarify use in conjunction with RCP CCW tie line isolation valves for RCP cooling from alternate subsystem.
- Add RCP motor CCW supply line isolation valve numbers to heading.
- Modify description of "RCP motor CCW supply line isolation valve" to clarify valve usage.

<u>DCD Tier 2 Subsection 9.2.2.2.2.1 will be revised as follows:</u>

- Add discussion of the use of the cross-tie valves.
- Add reference to DCD Subsection 13.5.2 for development of Operating and Maintenance procedures applicable to use of cross-tie valves.

Impact on R-COLA
There is no impact on the R-COLA.

Impact on S-COLA
There is no impact on the S-COLA.

Impact on PRA
There is no impact on the PRA.

Table 3.9-14 Valve Inservice Test Requirements (Sheet 62 of 112)

Valve Tag Number	Description	Valve/ Actuator Type	Safety-Related Missions	Safety Functions(2)	ASME IST Category	Inservice Testing Type and Frequency	IST Notes
NCS-MOV-537	Letdown heat exchanger component cooling water return containment isolation	Remote MO Gate	Maintain Close Transfer Close	Active Containment Isolation Safety Seat Leakage Remote Position	A	Remote Position Indication, Exercise/2 Years Containment Isolation Leak Test Exercise Full Stroke/ Cold Shutdown Operability Test	4 5
NCS-MOV-232A	Cross-connection between A,B-reactor coolant pump and C,D-	Remote MO Gate	Maintain Close Transfer Open	Active Remote Position	B	Remote Position Indication, Exercise/2 Years Exercise Full Stroke/	7
NCS-VLV-231A	A,B-reactor coolant pump supply line check	Check	Maintain Open Transfer Close	Active	BC	Check Exercise/ Refueling Outage	3
NCS-VLV-231B	A,B-reactor coolant pump supply line check	Check	Maintain Open Transfer Close	Active	BC	Check Exercise/ Refueling Outage	3
232B	between A,B-reactor coolant pump and C,D-reactor coolant pump component cooling water return line isolation		Transfer Open	Remote Position		Indication, Exercise/2 Years Exercise Full Stroke/ Cold Shutdown Operability Test	

and C2) has two in-series air operated isolation valves. These valves close automatically to isolate the non-seismic Category I portion of the CCW system upon receipt of a S+UV signal, P signal or surge tank low-low level signal.

In-series check valves are provided on the CCW return lines from the non-seismic Category I portion of the CCW system (See Figure 9.2.2-1, Sheet 9 of 9).

The CCW supply header (A2 and C2) isolation valves close automatically when one of the following occurs (See Figure 9.2.2-1, Sheet 9 of 9).

a single failure of one train while the second train in the same subsystem is undergoing on-line maintenance. Valve opening allows CCW flow to the affected RCP thermal barriers and motor bearing oil coolers from the alternative subsystem. The supply valves connecting to the alternative CCW subsystem are NCS-MOV-232A/B; the return valves are NCS-MOV-233A/B. The valves are operated in conjunction with an RCP CCW return line isolation valve (NCS-MOV-234A/B) to establish the alternative flow path.

ply line

nent cooling water surge tank

b) The isolation valves on turbine building supply line

- Low- low water level signal of the component cooling water surge tank

d under voltage signal

is manually opened from the MCR in the event that CCW flow is interrupted to the RCP motors and thermal barriers.

- **RCP CCW tie line isolation valve** **(NCS-MOV-232A/B, NCS-MOV-233A/B)**

This normally closed motor operated valve ~~opens when it becomes impossible to supply cooling water to the RCP of A1 (or C1) header~~ due to ~~the single failure of the CCW pump and ensures the thermal barrier cooling water~~.

is manually closed from the MCR in the event that CCW is interrupted to the RCP motors and thermal barriers. Closure of the valve allows one CCWS pump to provide adequate flow to four thermal barrier heat exchangers.

pply line isolation valve **(NCS-MOV-446A/B/C/D)**

r operated valve ~~closes when it becomes impossible to supply of A1 (or C1) header due to the single failure of the CCW pump and on-line maintenance, and ensures the thermal barrier cooling water.~~

- **RCP CCW supply line isolation valve** **(NCS-MOV-401A/B)**

can be closed manually from the MCR

This normally open motor operated valve ~~closes automatically upon P signal~~ to shutoff the component cooling water flow to the containment vessel.

- **RCP CCW return line isolation valve** **(NCS-MOV-234A/B)**

~~This normally open motor operated valve closes to establish the return line of the thermal barrier cooling water in the case it becomes impossible to supply cooling water to the RCP of A1 (or C1) header due to the single failure of the CCW pump and on-line maintenance. The cooling water for the thermal barrier is ensured by opening NCS-MOV-232A and B and NCS-MOV-233A and B and closing NCS-MOV-234A (or 234B).~~

This valve is normally open, but must be closed to configure the flow path to the RCPs in one subsytem (A1 or C1 header) from the other subsystem using the RCP CCW tie line isolation valves (NCS-MOV-232A/B, NCS-MOV-233A/B).

9.2.2.2.2 System Operations

Table 9.2.2-4 and 9.2.2-5, respectively, provide heat loads and water flow balance for various operating modes.

9.2.2.2.2.1 Normal Power Operation

During normal operation, at least one train from each subsystem is placed in service. A total of two CCWP and two CCW HXs are in operation. A combination of trains in service is trains A or B and trains C or D.

During this operating condition, an operating CCWP in each subsystem supplies CCW to all loops in the particular subsystem with cooling water temperature not exceeding 100 °F maximum.

CCWPs which are not in service are placed in standby and automatically start upon a low pressure signal of CCW header pressure.

During normal power operation, one of the two standby trains of CCW may be isolated for maintenance. If the operating train in the same subsystem with the train out for maintenance were to become unavailable, then CCW would be unavailable for two RCP motor coolers and thermal barrier heat exchangers. The RCP cross-tie isolation valves NCS-MOV-232A/B and 233A/B can be manually opened from the MCR (in conjunction with closing the appropriate NCS-MOV-234A or B valve from the MCR) to compensate for the CCW loss. The operator should align this alternative flow path to the RCP motor within 10 minutes to preclude motor overheating. This alternative flow path also provides CCW flow to the RCP thermal barriers, which ensures RCP seal cooling in the event that CVCS were unavailable for RCP seal injection. Because these valves can be slowly opened and closed, potential water hammer can be avoided. The open/close positions of the valves are displayed in the MCR. Subsection 5.4.1.3.4 discusses the effect of loss of component cooling water on reactor coolant pump operation.

A milestone schedule for implementation of the operating and maintenance procedures is defined in Subsection 13.5.2. Such procedures must include isolating one train of CCW for maintenance, and the use of the RCP cross-tie valves to provide RCP thermal barrier cooling in the case of a CCW failure in the subsystem that already has one train isolated.

9.2.2.2

After a
tempe
CCW
four C
opene

The fa
plant c
be saf

During
tempe

9.2.2.2

During refueling, the required number of CCW HXs and pumps is determined by the heat load. Normally, three trains operate in this mode. The remaining train may be taken out of service for maintenance. An operating CCWP in each subsystem supplies CCW to all loops in service in the particular subsystem with a maximum CCW supply water temperature not exceeding 100 °F.

9.2.2.2.2.4 Loss of Coolant Accident

All CCWP are automatically actuated by ECCS actuation signal. The start signal to the pumps is delayed. (Refer to Figure 8.3.1-2 Logic diagrams (Sheet 18 of 24)) The isolation valves for the CS/RHR HXs are automatically opened by the ECCS actuation signal and the same train CCWP start signal. The header tie line isolation valves are closed by an ECCS actuation signal in coincidence with an undervoltage signal, and the CCWS is separated into four individual trains (A, B, C and D). The header tie line isolation

RESPONSE TO REQUEST FOR ADDITIONAL INFORMATION

07/29/2011

US-APWR Design Certification

Mitsubishi Heavy Industries

Docket No. 52-021

RAI NO.:	**NO. 571-4365 REVISION 0**
SRP SECTION:	**09.02.02 – REACTOR AUXILIARY COOLING WATER SYSTEM**
APPLICATION SECTION:	**9.2.2**
DATE OF RAI ISSUE:	**4/13/2010**

QUESTION NO.: 09.02.02-57

Follow-up to RAI 362-2278, question 09.02.02-33

Based on the staff's review of the applicant's response to RAI 09.02.02-33, the following items should be addressed.

Item 1: The applicant should address the following concerns:

- The minimum NPSH that is needed for CCWS operation needs to be specified and explained.
- How the required minimum NPSH is satisfied by the system design when taking vortex formation into consideration is not discussed.
- How much excess margin is available for the most limiting case is not included.
- Insufficient information to enable the staff to independently confirm the adequacy of the design with regard to NPSH, including limiting assumptions and supporting justification is not included.
- The proposed DCD text is confusing. The DCD text states, since the difference of installation elevation between the surge tanks and the pumps is large enough, as NPSH available, there is sufficient margin. The applicant should consider revising this statement.
- Describe if the CCWS pumps trip based on sensed low water level in the surge tank.

Item 2: The applicant should address the following concerns:

- Describe in the DCD the bases for the surge tank setpoints water level.
- Describe in the DCD the surge tank design details such as system internal volume, temperature extremes that are accommodated by the design.
- The surge tank volume should be listed in both DCD Tier 1 and Tier 2 sections/tables.
- Describe in the DCD the maximum leakage rate that is assumed including justification.
- Describe in the DCD the key assumptions and conclusions from the design calculations for sizing the component cooling water system surge tanks.
- Since one surge tank services two safety-related CCWS trains, describe in the DCD possible surge tank level instrument interactions.
- Describe in the DCD if the surge tank internal partition plates can be internally inspected (manways provided).

Item 3:

- Gas accumulation in safety-related system needs to be addressed by the applicant. Gas accumulation is addressed in INPO Significant Event Report (SER) 2-05, "Gas Intrusion in Safety Systems," San Onofre event and information in Generic Letter(GL) 2008-01, "Managing as Accumulation in Emergency Core Cooling, Decay Heat Removal and Containment Spray Systems. Describe in the DCD that nitrogen accumulation has been adequately evaluated.

Item 4: The following concerns should be addressed in the response:

- Describe in the DCD the surge tank makeup water flow rates requirements.
- Describe in the DCD the makeup water flow paths and their safety related status.
- Describe in Tier 1, DCD Section 2.7.3.3, any safety related makeup water source to the surge tanks. In addition, appropriate Tier 1 requirements should be established for the makeup function.

Item 5: In accordance with Figure 9.2.2-1, vacuum breakers are installed on top of the surge tank. The applicant states in this RAI response that the vacuum breakers are installed 'in the' surge tank. The applicant should consider correcting this to "on the" surge tank. Also, note 6 on Figure 9.2.2-1 should be modified to indicate this is a vacuum breaker. In addition, the surge tank vacuum breakers are an important design feature to ensure the surge tanks remain operable under all design conditions and should be shown in the Tier 1 Figures.

Item 6: Provide a discussion in Tier 2, DCD Section 9.2.2 related to the 'protection functions' statement in the Technical Specifications Basis, Section B3.7.7 which state that surge tanks in the system provide pump trip protection functions to ensure that sufficient net positive suction head is available. Describe the protection functions in the DCD since the low-low water level alarm on the surge tank is not considered a pump trip protection function.

Reference: MHI's Responses to US-APWR DCD RAI No. 362-2278; MHI Ref: UAP-HF-09388; dated July 16, 2009; ML092080393.

ANSWER:

- Item 1 Bullet 1
  The NPSH available ($NPSH_A$) for each CCWS operating mode is designed to be 70 ft, which is based on NPSH required at the rated flow rate of 12,000 gpm plus 50% margin. The CCWS pumps are designed to have a required NPSH ($NPSH_R$) of 70 ft or less.

- Item 1 Bullet 2
  The static water head used in the calculation of NPSH available as CCWS is based on an elevation difference of 125 ft from the surge tank outlet nozzle (which is lower than the low-low tank water level pump trip setpoint), to the pump suction nozzle; thus, this is conservative with respect to the actual elevation difference between the water level and pump suction. The available NPSH obtained by this elevation difference further includes a margin of 50% in the pump design (that is, NPSH available is reduced by 50%). Thus, the CCWS has adequate margin to avoid vortex suction at the pumps due to decrease in the surge tank water level.

- Item 1 Bullet 3 and 4
  Available CCW pump NPSH is determined by the pressure loss in piping, static water head and saturated steam pressure in the CCW surge tank. Conservative values are used for each of these factors in the determination of available NPSH. Specifically, the

suction piping pressure loss is based on the CCW pump rated flow of 12,000 gpm, which exceeds the required flow rate for any system operating mode. The assumed static water head is based on an elevation difference of 125 ft from the tank outlet nozzle to the pump suction, rather than the more realistic tank low-low water level. Saturated steam pressure is taken at the maximum water temperature of 150°F. In addition to these conservative assumptions, the available NPSH for pump design is assumed to be 50% less to provide additional margin, as stated earlier. DCD Subsection 9.2.2.2.1.2 will be revised to summarize this design approach.

- Item 1 Bullet 5
  The description of the installation height between the surge tank and the pump in DCD Subsection 9.2.2.2.1.2 will be revised to clarify that the key assumptions and basis for assuring that there is adequate NPSH for CCWS pumps.

- Item 1 Bullet 6
  The CCWS pumps do not trip on surge tank low-low level. Because of the conservatism in the NPSH calculations, the CCWS continue to have adequate NPSH even at the low-low level setpoint. Thus, the CCWS pumps are not automatically tripped. There are three causes for a substantial decrease in the surge tank water level:

  i) Leakage from valve glands or pump seals
  ii) Leakage from components in non-safety piping during earthquake
  iii) Leakage across header tie line valves (NCS-MOV-007A/B, NCS-MOV-020A/B), if closed.

  Upon occurrence of leakage at valve glands or pump seals, a surge tank low level will result in opening of valves to normal water makeup with a design capacity of 75 gpm; the makeup capacity exceeds the potential leakage rate, from valve glands or pump seals as discussed in the response to Question 9.2.2-49. If leakage occurs in non-safety piping, the surge tank low-low water level actuates isolation valves to non-safety piping, so that tank compartment water level can be maintained.

- Item 2 Bullet 1, 2, 4 and 5
  The capacity of the surge tanks is determined by taking into account the following factors:

  i) Absorption of volume variations due to temperature changes caused by changes in heat load of the CCW System
  ii) Sufficient volume to accommodate the in-leakage of cooling water or inflow from the RCP thermal barrier prior to isolation of the leakage.

  DCD Tier 2 Table 9.2.2-2 will be changed to reflect a design change which increases the volume of each surge tank to 420 ft^3. The larger tank volume has been included in the DCD Tier 1 Table 2.7.3.3-5 update provided in response to Question 9.2.2-68.

  For volume variations due to CCW temperature changes, a temperature variation of 7°F associated with the start and stop of the BA evaporator is taken into consideration. Assuming that the water volume of the CCW System is about 8,750 ft^3, the compartment volume will change by about 10% due to a temperature change of ±7°F.

  In-leakage from the RCP thermal barrier is assumed to be 300 gpm continuing for thirty seconds. To accommodate this inflow, the capacity of the gas phase section of the surge tank must be at least 120 ft^3, which is less than 50% of the tank capacity. In case of leakage from the thermal barrier, the thermal barrier outlet valve closes in 10 seconds to isolate the in-leakage in less than thirty seconds.

  A potential in-leakage rate of 50 gpm from sources other than the RCP thermal barrier is

assumed to occur due to static failures (leakage at valve glands or pump seals). The surge tank water level is maintained to ensure a gas volume that provides a sufficient time margin for isolation of the in-leakage.

- Item 2 Bullet 3
  Description on the surge tank capacity was added to DCD Revision 3 Tier 1 Table 2.7.3.3-5 (Item 7.iii); it is listed in DCD Tier 2 Table 9.2.2-2. These tables will be updated to reflect the larger tank capacity, as discussed earlier.

- Item 2 Bullet 6 and 7
  The surge tanks are normally maintained at a slight positive in pressure with a nitrogen gas atmosphere and are free of significant temperature transients or variations in flow rate. Thus, the possibility of a large scale static failure in the tank is very low. If out-leakage were to occur, water would be supplied from the make-up water system. In-leakage would be detected by surge tank compartment water level and each header flow rate and isolated manually. If one CCW train were to be isolated, a failure in the operating train might adversely affect the operating train. To prevent this, an internal partition plate is installed in each tank effectively creating a functionally separate volume for each CCW train. The partition plate also serves to separate the train suction points; the partition extends from the tank bottom to a height above the high water level setpoint. The surge tanks are provided with manholes to allow visual inspection of the partition plates in the tanks. Redundant surge tank compartment water level indicators are installed on both sides of each CCWS tank. There is no potential conflict between the level instruments because only one provides input to the level control valve. Please see the response to Question 9.2.2-49, which provides DCD Figure 2.7.3.3-1 illustrating the functional arrangement of the CCWS surge tank partition plate.

- Item 3:
  Tier 2, DCD Subsection 9.2.2.2.1.3 will be revised to add physical characteristics that minimize the potential for gas accumulation at locations other than the surge tank.

- Item 4
  Please see the responses to Questions 9.2.2- 51, 55, 67 and 69 for discussion of makeup capacity, requirements and sources.

- Item 5
  DCD Tier 1 Figure 2.7.3.3-1 was revised in DCD Revision 3 to add the vacuum breaker. The symbol for vacuum breakers is shown in DCD Tier 2 Figure 1.7-3. Therefore, Note 6 on Tier 2 Figure 9.2.2-1 does not need to be revised to indicate this is a vacuum breaker.

- Item 6
  Tier 2 DCD Subsection 9.2.2.2.1.2 will be revised to address "protection function" as indicated in B3.7.7 from the approved PWR Standard Technical Specification Bases, i.e., the surge tank elevation with respect to the pump provides a protection function to assure adequate NPSH.

Impact on DCD

<u>DCD Tier 2 Subsection 9.2.2.2.1.2 will be revised as follows:</u>

- Add description of design approach used to assure adequate NPSH and avoidance of potential vortexing.

DCD Tier 2 Subsection 9.2.2.2.1.3 will be revised as follows:

- Add statement regarding physical location of the CCWS surge tanks
- Add statement regarding surge tank elevation and piping arrangement for avoidance of gas accumulation.
- Address inspection accessibility.
- Clarify free volume capacity
- Add surge tank capability to accommodate inleakage
- Add effect of surge tank water volume change due to system temperature change

DCD Tier 2 Subsection 9.2.2.5.4 will be revised as follows:

- Additional description of level indication and level control function
- Add basis for normal level setpoint and variation of level with temperature.
- Add discussion regarding surge tank leakage monitoring

DCD Tier 2 Table 9.2.2-2 will be revised as follows:

- Revise surge tank volume consistent with design change.

Impact on R-COLA
There is no impact on the R-COLA.

Impact on S-COLA
There is no impact on the S-COLA.

Impact on PRA
There is no impact on the PRA.

the surge tank accommodates the thermal expansion and contraction of the cooling water and potential leakage into or out of the CCWS.

Demineralized quality water with corrosion inhibitors is circulated in the CCWS. No outside impurities are expected to be infiltrated in the system, therefore, the CCW filter is not necessary. The impacts of non-safety related SSC failures in the CCW system will not adversely affect safety-related SSCs to perform their safety related function since the direct impact of a pipe break in the non-safety portion of the system can be accommodated. The CCW system's safety function will be maintained as a result of the nonsafety-related piping failure, and the indirect impact of the pipe break will not impact any SSC safety function.

9.2.2.2.1 Component Descriptions

The CCWS components are described below. Design parameters for major components of CCWS are provided in Table 9.2.2-2.

9.2.2.2.1.1 CCW HX

The CCW HXs transfer heat from the CCWS to the ESWS. The CCW HXs are plate type. The CCW HXs are designated quality group C as defined in Regulatory Guide 1.26 (Ref. 9.2.11-3), seismic category I, and are designed in accordance with the requirements of the ASME Section III, class 3.

9.2.2.2.1.2 CCWP

The CCWP circulates cooling water through the CCW HX and the components cooled by CCWS.

The CCWS surge tank is located at a higher elevation (upper level of the Reactor Building) than the CCWS pumps (lower level of the Reactor Building). Calculations of available NPSH is based on conservative assumptions such as highest CCWS flow rate, highest surge tank temperature and lowest surge tank level. Using these conservative assumptions, the calculated NPSH is further reduced to define the design specification for the required NPSH of the CCWS pumps. This approach ensures that the CCWS pumps have flooded suction during all operating conditions and vortexing can be avoided.

The pumps a
motor.

The pumps a
category I, ar
III, class 3.

The pumps are designed in consideration of head losses in the cooling water inlet piping based on full power flow conditions, increased pipe roughness, maximum pressure drop through the system heat exchangers, and the actual amount of excess margin etc.

~~The surge tanks are located at a higher elevation than the pumps to ensure sufficient NPSH margin is available.~~

9.2.2.2.1.3 CCW Surge Tank

~~The CCW surge tanks~~ are connected to the suction side of the CCWP. The surge tank accommodates the thermal expansion and contraction of the cooling water and potential leakage into or from the CCWS. Makeup water is supplied to the respective surge line.

The CCW surge tanks are constructed of carbon steel and located in the upper level of the Reactor Building. They

The CCW surge tank is designated quality group C as defined in Regulatory Guide 1.26, seismic category I, and is designed to the requirements of the ASME Section III, class 3.

In case of a small leak out of the system, makeup water is supplied as necessary until the leak is isolated.

The makeup water can be supplied from the following systems:

- Demineralized water system (DWS) which supplies the demineralized water
- Primary makeup water system (PMWS) which supplies the deaerated water and primary makeup water
- Refueling water storage system (RWS) which supplies the refueling

The elevation of the surge tank and piping arrangement minimize the potential for nitrogen accumulation in places other than the surge tank.

Deaerated water is used for initial filling of this system and demineralized w for automatic makeup when the tank water level reaches a low level setpoi

If necessary, primary makeup water and refueling water may be used durin emergency. Refueling water storage pit is water source of seismic category

Water chemistry control of CCWS is performed by adding chemicals to the CCW surge tank to prevent long term corrosion that may degrade system performance. The CCW in the surge tank is covered with nitrogen gas to maintain water chemistry.

Accessibility is provided for inspection of the partition plate.

In order to provide redundancy for a passive failure (a loss of system integrity resulting in abnormal leakage), an internal partition plate is provided in the tank so that two separate surge tank volumes are maintained.

The CCW surge tank ~~capacity of 50% is able to receive the amount of inleak from RCP thermal barrier Hx in consideration of isolation time.~~ Regarding the makeup water source of the RWSP to be seismic category I, this makeup water source provides capacity to accommodate system leakage for seven days. Makeup water supply is performed by an operator by locally operating the manual valves. A vacuum breaker is installed on the surge tank to prevent damaging the tank in the event of a sudden decrease in water level.

9.2.2.2.1.4 Piping

Carbon steel is used f
welded, except where

normal free volume of 20% can accommodate 300 gpm potential inleakage from an RCP thermal barrier heat exchanger for thirty seconds. The most significant volume change due to system temperature change is associated with start/stop of the Boric Acid Evaporator; the effect of such a change is about 10% of surge tank compartment volume, based on a potential temperature variation of ±7°F. Relief valves provide overpressure protection and discharge to the Reactor Building sump.

9.2.2.2.1.5 Val

- **Header tie line is**

The function of this motor operated valve is to separate each subsystem into two independent trains during abnormal and accident conditions. This ensures each safety train is isolated from any potential passive failure in the non-safety portion or another safety train of the CCWS. This valve automatically closes at once upon the following signals:

The CCWS is designed with redundant MCR level indication for each surge tank compartment. The normal demineralized water makeup line for each CCWS surge tank compartment contains a flow indication device that can also be read in the MCR. The combination of continuously monitored compartment level and demineralized water makeup flow provides the ability to trend compartment level data and normal makeup flow. The capability to trend this data allows operators to ensure that the compartment water volume does not decrease below that necessary to ensure CCWS function for 7 days without makeup for post-seismic operation, if necessary.

Surge tank water level considerations include:

- **Potential inleakage from an RCP thermal barrier heat exchanger, as discussed in Subsection 9.2.2.2.1.3.**
- **Volume variations due to CCW temperature change, as discussed in Subsection 9.2.2.2.1.3.**
- **Adequate volume in each compartment to accommodate potential leakage for 7 days without makeup, as discussed in Subsection 9.2.2.3.2.**

9.2.2

9.2.2

CCW
failur
trans

9.2.2

Radi
indic
the C

9.2.2

The CCW supply header flow rates are indicated in the MCR.

9.2.2.5.4 CCW surge tank water level

~~The CCW surge tank water level is indicated in the MCR. If CCWS in-leakage or out-leakage occurs, a high or low water level alarm is transmitted to the MCR.~~

~~A low-low water level signal~~ isolates the components located in the non-seismic category I buildings. ~~In addition, the isolation valves on the header tie line are closed by a low-low water level signal and the subsystem, where the low-low water level signal is actuated, is divided into two independent trains for each train to supply the respective loop.~~

9.2.2.5.5 RCP thermal barrier HX and RCP motor cooling water flow rate

arrier HX and motor cooling water flow rate is indicated in
o its low flow setpoint, a low flow alarm is transmitted to
lting from the in-leakage of reactor coolant to CCWS due
mal barrier HX tube leak, is transmitted to the MCR when
times as large as the normal flow rate, and the isolation
eturn line are closed.

The normal water makeup valves (LCV-010A/B/C/D) are automatically closed when the surge tank reaches the normal level. A high water level signal provides an alarm in the MCR. A low water level signal provides an alarm in the MCR and opens the normal water makeup valves. Only one of the two instruments for each compartment is used to provide automatic control of the associated surge tank makeup valve. A low-low water level signal also provides a MCR alarm and

Level indication that is on-scale (i.e., at or above the 0% instrument level) is indicative of adequate CCWS pump net positive suction head.

pressure

The CCW surge tank pressure is locally indicated. The surge tank nitrogen cover gas supply valve and tank vent valve are controlled with open-closed control so that the tank pressures are maintained within a pre-set range. High and low surge tank pressures are alarmed in the MCR.

9.2.2.5.7 CCWP discharge and suction pressure

The CCW pump discharge and suction pressures are locally indicated and are used for CCW pump performance testing.

Table 9.2.2-2 Component Cooling Water System Component Design Date

Component Cooling Water Pump		
Quantity	4	
Type	horizontal centrifugal	
Design flow rate	12,000 gpm	
Design head	180 ft	
Design pressure	200 psig	
Design temperature	200 ^{0} F	
Component Cooling Water Heat Exchanger		
Quantity	4	
Type	Plate type	
Plate Material	Ti	
Heat transfer rate	50.0x 10^6 Btu/hr	
	CCW side	ESW side
Design flow rate	11,000 gpm	11,000 gpm
Design pressure	200 psig	150 psig
Design Temperature	200 ^{0} F	140 ^{0} F
Design Inlet temperature	-	95 ^{0}F
Design outlet temperature	100 ^{0}F	-
Component Cooling Water Surge Tank		
Quantity	2	
Type	Horizontal	
Capacity	~~283~~ ft ^{3}	
Design pressure	50 psig	
Design temperature	200 ^{0} F	

420

(partitioned into two compartments)

RESPONSE TO REQUEST FOR ADDITIONAL INFORMATION

7/29/2011

US-APWR Design Certification

Mitsubishi Heavy Industries

Docket No. 52-021

RAI NO.:	**NO. 571-4365 REVISION 0**
SRP SECTION:	**09.02.02 – REACTOR AUXILIARY COOLING WATER SYSTEM**
APPLICATION SECTION:	**9.2.2**
DATE OF RAI ISSUE:	**4/13/2010**

QUESTION NO.: 09.02.02-58
Follow-up to RAI 362-2278, question 09.02.02-34

Based on the staff's review of the applicant's response to RAI 09.02.02-34, the following items should be addressed.

Item 2: The discussion in response to RAI 09.02.02-34, item 2 should be added to the DCD.

Item 3: Although the additional text explained the re-supply water function and operation of the associated valves (NCS-MOV-445A/B, MOV-447A/B, and MOV-448A/B), it does not discuss the bases for the 4 diameter bypass lines. The discussion should be added to the DCD.

The US-APWR design related to the CCWS supply to the RCPs isolates on a containment isolation signal (MOV-401A and B, MOV-402A and B, MOV-436A and B, and MOV 438A and B) which is counter to the guidance of SRP 9.2.2, Section II. "Acceptance Criteria", Item 4. D which states: "Remote manual isolation of the RCP seal coolant water by the main control room operator for continued long-term pump operation in an actual event".

In addition, SRP 9.2.2. Section III, "Review Procedure," Item 4.F. states:

"Design provisions are made for isolation of component cooling water supply and return lines to the RCP by remote manual means only".

In accordance with 10 CFR 52.47 (a) (9), an evaluation shall discuss how the proposed alternative provides an acceptable method of complying with the Commission's regulations. The applicant should revise Table 1.9.2-9, "US-APWR Conformance with Standard Review Plan Chapter 9 Auxiliary Systems," stating the bases for an exception or departure related to GDC 44 and the guidance of SRP Section 9.2.2.

Reference: MHI's Responses to US-APWR DCD RAI No. 362-2278; MHI Ref: UAP-HF-09333; dated June 19, 2009; ML091760624.

ANSWER:
Item 2: Tier 2, DCD Subsection 9.2.2.3.2 will be revised to describe why there is low potential for leakage into the RCS, as stated in the response to Question 09.02.02-34, Item 2.

Item 3: The 8-inch lines and valves are sized for all plant operating conditions. The isolation signals that were described in DCD Revision 3 for the header tie line isolation valves (NCS-MOV-020A/B and 007A/B), RCP CCW supply line isolation valves (NCS-MOV-401A/B) and RCP CCW supply line containment isolation valves (NCS-MOV-402A/B), RCP CCW return line containment isolation valves (NCS-MOV-436A/B and NCS-MOV-438A/B) will be removed. Thus, RCP thermal barrier cooling is not automatically isolated, consistent with SRP 9.2.2. As a result, the 4-inch bypass lines and valves (NCS-MOV-445A/B, MOV-447A/B, and MOV-448A/B), which were intended only to provide sufficient cooling for the RCP thermal barrier under the conditions associated with containment isolation, are not necessary. Thus, this alternate flow path and associated valves will be deleted. The additional description discussed in Question 09.02.02-34 will also be removed.

Removal of automatic closure of the header tie line isolation valves (NCS-MOV-020A/B and 007A/B) during an accident condition introduces the potential for additional loading on one train of a subsystem if a single failure is postulated in the other train. (Note, the response to Question 09.02.02-48 describes the design change to the automatic isolation of the A2 header heat loads.) The potential exists only for the period in which the header tie line valves are open. For example, if the B-CCW pump fails to actuate upon the receipt of an ECCS actuation signal, the heat load on the A-CCW heat exchanger will be increased as follows:

<u>Additional load from B header</u>

- B-CCW pump: Pump fails to start: 0.0 Btu/hr
- B-SI pump: Pump actuated by ECCS signal: 0.84×10^6 BTU/hr
- B-CS/RHR pump: Pump actuated by containment spray signal: 0.48×10^6 BTU/hr
- B-CS/RHR heat exchanger: CCW will not be provided to the heat exchanger because the outlet isolation valve (NCS-MOV-145B) opens only on receipt of both B-CCW pump actuation and ECCS actuation signal: 0.0 Btu/hr

Thus, the total additional A-CCW heat exchanger heat load is 1.32×10^6 BTU/hr.

<u>Additional load from A1 header</u>

The heat load from A1 header is already included in DCD Revision 3 Table 9.2.2-4. Therefore, removal of the auto closure for the header tie line will not affect the A-CCW heat exchanger heat load.

<u>Additional load from A2 header</u>

- The heat load from the A-instrument air system in the Turbine Building and non-safety related components in the Auxiliary Building (no CCWS supporting components for C2 header) will be isolated by ECCS actuation, containment spray signal or low-low surge tank level: 0.0 Btu/hr
- The heat load from excess letdown heat exchanger (letdown heat exchanger for C2 header) will also be isolated by containment isolation signal: 0.0 Btu/hr

Revised Table 9.2.2-4 provided in the response to Question 9.2.2-52 lists the total "A or B header" heat load as 161.7×10^6 BTU/hr for the accident condition. Adding 1.32×10^6 BTU/hr to account for open header tie line isolation valves and a single failure would increase this value to 163.02×10^6 BTU/hr. This value would increase the required heat exchanger UA value for accident condition; Table 9.2.2.52-1 in the response to Question 9.2.2-52 lists this value as 5.0×10^6 Btu/°F-hr. However,

such a change would not affect the design basis of the CCW heat exchanger as it is small in comparison to the required UA value of 7.2 x 10^6 BTU/hr for the refueling condition. Thus, the system would not overheat in this configuration as the available heat exchanger could accommodate the increased heat load.

For the case of all B-train failure due to the failure of B-Class 1E GTG during the accident condition concurrent with a LOOP, the non-safety components and all the B-train safety components powered from the B-Class 1E will stop. Thus, the heat load from B and A2 header will be zero and this situation is bounded by the case of B-CCW pump failure.

For the case of A, C and D-train failure, an analogous approach results in similar conclusions. In summary, removal of auto closure for the header tie line isolation valves (NCS-MOV-020A/B and 007A/B) does not affect the CCWS design.

Closure of the header tie line valves is required to achieve separation of trains within each subsystem. In the event of a design basis accident, train separation prevents drainage of the subsystem in the event of a subsequent passive component failure such as pipe break. Based on the discussion in SECY-77-439 (§2.D, "Passive Failure in a Fluid System"), leakage is typically assumed during the long-term post-accident response, but not additional gross failure of passive components. SECY-77-439 refers to long-term cooling as "24 hours or greater after the event". Thus, it is assumed that the operator will close the header tie line isolation valves within 24 hours to configure the CCWS for long-term operation after a design basis accident. The DCD will be modified to identify that operators must close the header tie line isolation valves to achieve train separation.

Impact on DCD

DCD Tier 1 Subsection 2.7.3.3.1 will be revised to delete references to NCS-MOV-445A/B, MOV-447A/B, MOV-448A/B; and update information for NCS-MOV-401A/B, MOV-402A/B, MOV-436A/B and MOV-438A/B as follows:

- Table 2.7.3.3-1
- Table 2.7.3.3-2
- Table 2.7.3.3-3
- Table 2.7.3.3-4
- Figure 2.7.3.3-1 (Revised figure provided in Question 9.2.2-49 response reflects deletion of NCS-MOV-445A/B, MOV-447A/B, and MOV-448A/B)

DCD Tier 1 Subsection 2.11.2.1 will be revised to delete references to NCS-MOV-445A/B, MOV-447A/B, MOV-448A/B and update information for NCS-MOV-401A/B, MOV-402A/B, MOV-436A/B and MOV-438A/B, as follows:

- Table 2.11.2-1
- Table 2.11.2-2

DCD Tier 2 Table 3.2-2 will be revised as follows:

- Delete reference to NCS-MOV-445A/B, 447A/B, 448A/B

DCD Tier 2 Table 3.9-14 will be revised as follows:

- Delete reference to NCS-MOV-445A/B, 447A/B, 448A/B

DCD Tier 2 Table 3D-2 will be revised as follows:

- Delete reference to NCS-MOV-445A/B, 447A/B, 448A/B

DCD Tier 2 Subsections 6.2.4.2 and 6.2.4.3.2 will be revised as follows:

- Clarify isolation function and actuation of CCW supply and return line to the RCPs valves.

DCD Tier 2 Table 6.2.4-3 will be revised as follows:

- Delete reference to NCS-MOV-445A/B, 447A/B, 448A/B
- Change "Valve Position, Post-Accident" from "C" to "O" for NCS-MOV-402A/B, 436A/B, 438A/B

DCD Tier 2 Subsection 9.2.2.2.2.4 will be revised as follows:

- Delete automatic closure discussion for header tie line isolation valves
- Add header tie line isolation valve closure time discussion
- Reference COL item for closure header tie line isolation valve closure.

DCD Tier 2 Subsection 9.2.2.3.2 will be revised as follows:

- Revise discussion of closure of header tie line isolation valves to eliminate reference to automatic closure.
- Add discussion provided in the response to RAI Question 09.02.02-34, Item 2, to the DCD.

DCD Tier 2 Subsection 9.2.2.3.5 will be revised as follows:

- Revise discussion to reflect that thermal barrier cooling will not be automatically isolated and that 4-inch bypass valves have been removed from the design.

DCD Tier 2 Table 9.2.2-3 will be revised as follows:

- Delete reference to NCS-MOV-445A/B, 447A/B, 448A/B and update the FMEA.
- Update to reflect that automatic closure of NCS-MOV-020A/B and 007A/B has been deleted; see the response to Question 9.2.2-48 for this change.
- Reflect RCP cross tie operation in Item 1.
- Add a note to provide additional information for "Effect on System Safety Function" with regard to header tie line isolation valves.

Impact on R-COLA
There is no impact on the R-COLA.

Impact on S-COLA
There is no impact on the S-COLA.

Impact on PRA
There is no impact on the PRA.