5.0 REACTOR COOLANT SYSTEM AND CONNECTED SYSTEMS
TABLE OF CONTENTS

				Page
5.0	REACTOR COOLANT SYSTEM AND CONNECTED SYSTEMS			5.1-1
	5.1	SUMMARY DESCRIPTION		5.1-1
		5.1.1	Schematic Flow Diagram	5.1-2
		5.1.2	Piping and Instrumentation Diagrams	5.1-2
		5.1.3	Elevation Drawings	5.1-2
	5.2	INTEGRITY OF REACTOR COOLANT PRESSURE BOUNDARY		5.2-1
		5.2.1	Compliance with Codes and Code Cases	5.2-1
		5.2.2	Overpressure Protection	5.2-1
			5.2.2.1 Design Basis	5.2-2
			5.2.2.2 Design Evaluation	5.2-2
			5.2.2.3 Piping and Instrumentation Diagrams	5.2-5
			5.2.2.4 Equipment and Component Description	5.2-5
			5.2.2.5 Mounting of Pressure Relief Devices	5.2-6
			5.2.2.6 Applicable Codes to Maintain Reactor Coolant Pressure Boundary Structural Integrity	5.2-6
			5.2.2.7 Material Specification	5.2-7
			5.2.2.8 Process Instrumentation	5.2-7
			5.2.2.9 System Reliability	5.2-7
			5.2.2.10 Environmental Equipment Qualification	5.2-7
			5.2.2.11 Inspection and Testing	5.2-7
		5.2.3	Reactor Coolant Pressure Boundary Materials	5.2-8
			5.2.3.1 Material Specifications	5.2-8
			5.2.3.2 Compatibility with Reactor Coolant	5.2-8
			5.2.3.3 Fabrication and Processing of Ferritic Materials	5.2-12
			5.2.3.4 Fabrication and Processing of Austenitic Stainless Steels	5.2-13
			5.2.3.5 Intergranular Stress Corrosion Cracking	5.2-14
		5.2.4	Inservice Inspection of Reactor Coolant Pressure Boundary	5.2-15
			5.2.4.1 System Boundaries Subject to Inspection	5.2-16
			5.2.4.2 Initial Testing and Examination	5.2-16
			5.2.4.3 Arrangement and Accessibility	5.2-18
			5.2.4.4 Examination Technique and Procedure	5.2-18
			5.2.4.5 Inspection Intervals	5.2-18
			5.2.4.6 Examination Categories and Requirements	5.2-18
			5.2.4.7 Evaluation of Examination Results	5.2-18
			5.2.4.8 System Leakage and Hydrostatic Pressure Tests	5.2-18a
		5.2.5	Detection of Leakage Through Reactor Coolant Pressure Boundary	5.2-19
			5.2.5.1 Drywell Sumps	5.2-20
			5.2.5.2 Continuous Air Monitor	5.2-20
			5.2.5.3 Thermocouple Leak Detection	5.2-20
			5.2.5.4 Flow and Pressure Switches	5.2-21
			5.2.5.5 Floor and Equipment Drains	5.2-21
			5.2.5.6 Location of Leakage in the Drywell	5.2-21
			5.2.5.7 Acoustic Monitors	5.2-23a

5.0 REACTOR COOLANT SYSTEM AND CONNECTED SYSTEMS
TABLE OF CONTENTS

Page

		5.2.5.8	Leakage Rate Limits	5.2-24
		5.2.5.9	High/Low Pressure Interface	5.2-24
		5.2.5.10	Compliance with Regulatory Guide 1.45	5.2-24
	5.2.6	Detection of Leakage Beyond the Reactor Coolant Pressure Boundary		5.2-24
		5.2.6.1	Floor Drain Sumps	5.2-25
		5.2.6.2	Area Radiation Monitoring	5.2-25
		5.2.6.3	Area Temperature Monitoring	5.2-26
		5.2.6.4	Visual Inspection of Equipment and Operating Areas	5.2-26
	5.2.7	References		5.2-27
5.3	REACTOR VESSELS			5.3-1
	5.3.1	Reactor Vessel Materials		5.3-1
		5.3.1.1	Reactor Vessel Materials Specification	5.3-1
		5.3.1.2	Special Processes Used for Manufacturing and Fabrication	5.3-1
		5.3.1.3	Special Methods for Nondestructive Examination	5.3-2
		5.3.1.4	Special Controls for Ferritic and Austenitic Stainless Steels	5.3-2
		5.3.1.5	Fracture Toughness	5.3-3
		5.3.1.6	Material Surveillance	5.3-4
		5.3.1.7	Reactor Vessel Fasteners	5.3-5
		5.3.1.8	Reactor Vessel Nozzle Safe Ends	5.3-5
	5.3.2	Pressure-Temperature Limits		5.3-7
		5.3.2.1	Limit Curves	5.3-8
		5.3.2.2	Operating Procedures	5.3-10
	5.3.3	Reactor Vessel Integrity		5.3-10
		5.3.3.1	Design	5.3-10
		5.3.3.2	Materials of Construction	5.3-12
		5.3.3.3	Fabrication Methods	5.3-12
		5.3.3.4	Inspection and Testing Requirements	5.3-12
		5.3.3.5	Shipment and Installation	5.3-13
		5.3.3.6	Operating Conditions	5.3-13
		5.3.3.7	Inservice Surveillance	5.3-14
	5.3.4	References		5.3-15
5.4	COMPONENT AND SUBSYSTEM DESIGN			5.4-1
	5.4.1	Reactor Recirculation System		5.4-1
		5.4.1.1	Design Bases	5.4-1
		5.4.1.2	Description	5.4-2
		5.4.1.3	System Operation	5.4-5
		5.4.1.4	Performance Evaluation	5.4-9
		5.4.1.5	Tests and Inspections	5.4-18
	5.4.2	Steam Generators		5.4-18a
	5.4.3	Hydrogen Water Chemistry System		5.4-19

5.0 REACTOR COOLANT SYSTEM AND CONNECTED SYSTEMS
TABLE OF CONTENTS

			Page
	5.4.3.1	Hydrogen Injection System	5.4-20
	5.4.3.2	Oxygen Injection System	5.4-20
	5.4.3.3	Control and Instrumentation	5.4-21
	5.4.3.4	Performance Analysis	5.4-22
	5.4.3.5	Safety Analysis	5.4-22
	5.4.3.6	Tests and Inspections	5.4-22
	5.4.3.7	Zinc Injection Process System	5.4-23
5.4.4	Main Steam Line Flow Restrictors		5.4-23a
	5.4.4.1	Design Bases	5.4-23a
	5.4.4.2	System Description	5.4-23a
	5.4.4.3	Design Evaluation	5.4-23a
	5.4.4.4	Tests and Inspections	5.4-25
5.4.5	Main Steam Line Isolation System		5.4-25
5.4.6	Isolation Condenser		5.4-26
	5.4.6.1	Design Bases	5.4-26
	5.4.6.2	Description	5.4-26
	5.4.6.3	Design Evaluation	5.4-28
	5.4.6.4	Tests and Inspections	5.4-29a
5.4.7	Reactor Shutdown Cooling System		5.4-30
	5.4.7.1	Design Bases	5.4-30
	5.4.7.2	System Design	5.4-31
	5.4.7.3	Performance Evaluation	5.4-32
	5.4.7.4	Tests and Inspections	5.4-32
5.4.8	Reactor Water Cleanup System		5.4-33
	5.4.8.1	Design Bases	5.4-33
	5.4.8.2	System Description	5.4-33
	5.4.8.3	System Evaluation	5.4-35
	5.4.8.4	Tests and Inspections	5.4-36a
5.4.9	Main Steam Line and Feedwater Piping		5.4-37
	5.4.9.1	Description	5.4-37
	5.4.9.2	Performance Evaluation	5.4-37
	5.4.9.3	Inspection and Testing	5.4-37
5.4.10	Pressurizer		5.4-37
5.4.11	Pressurizer Relief Discharge System		5.4-37
5.4.12	Valves		5.4-38
	5.4.12.1	Design Bases	5.4-38
	5.4.12.2	Description	5.4-38
5.4.13	Safety and Relief Valves		5.4-39
	5.4.13.1	Design Description	5.4-39a
	5.4.13.2	Performance Evaluation	5.4-39a
	5.4.13.3	Tests and Inspections	5.4-39a
5.4.14	Component Supports		5.4-39a
5.4.15	Reactor Vessel Head Cooling System		5.4-40
	5.4.15.1	Design Bases	5.4-40
	5.4.15.2	System Design	5.4-40
	5.4.15.3	Performance Evaluation	5.4-41
5.4.16	References		5.4-42

5.0 REACTOR COOLANT SYSTEM AND CONNECTED SYSTEMS
LIST OF TABLES

Table

5.1-1 Reactor Coolant System Data
5.1-2 Applicable Reactor Coolant System P&Ids
5.1-3 Coolant Volumes (Ft^3)
5.2-1 Safety and Relief Valves Setpoints and Capacity
5.2-2 Typical Reactor Coolant Pressure Boundary Material Specifications
5.2-3 Furnace-Sensitized Stainless Steel Originally in Unit 2 and 3 Vessels
5.2-4 Furnace-Sensitized Stainless Steel Safe Ends Replaced on Unit 2 Vessel
5.2-5 Furnace-Sensitized Stainless Steel Remaining Unit 2 Vessel
5.2-6 Modification Program for Unit 3 Vessel Prior to Operation
5.2-7 Recirculation Pipe Replacement for Unit 3
5.2-8 Typical Water Requirements for the Condensate Storage Tanks
5.2-9 Reactor Coolant System Chemistry Limits

5.3-1 Neutron Flux Monitor and Base Metal Sample Withdrawal Schedule

5.4-1 Reactor System Performance Data Used to Define Jet Pump Hydraulic Boundary Conditions
5.4-2 Jet Pump System Description and Performance Predictions

5.0 REACTOR COOLANT SYSTEM AND CONNECTED SYSTEMS
LIST OF FIGURES

Figure	
5.1-1	Typical Boiling Water Reactor Coolant System
5.2-1	Reliability of Vessel Pressure Protection vs. Number of Safety Valves Installed
5.2-2	Dresden Station Units 2 and 3 Turbine Trip No Bypass Transient Analysis
5.2-3	Dresden Station Units 2 and 3 MSIV Closure, Flux Scram Transient Analysis
5.2-4	Deleted
5.2-5	Deleted
5.2-6	Deleted
5.2-7	Deleted
5.2-8	Deleted
5.2-9	Deleted
5.3-1	Reactor Vessel General Outline
5.3-2	Reactor Vessel Interior Outline Sections
5.3-3	Press-Temp Limits for Pressure Testing
5.3-4	Press-Temp Limits for Pressure Testing
5.3-5	Press-Temp Limits for Pressure Testing
5.3-6	Press-Temp Limits for Non-Nuclear Heatup/Cooldown
5.3-7	Press-Temp Limits for Critical Operations
5.4-1 through 5.4-4	Deleted
5.4-5	Reactor Vessel Isometric
5.4-6	Jet Pump Isometric
5.4-7	NPSH Available vs. Pump Inlet Temperature at Various Pump Inlet Pressures
5.4-8	Jet Pump Efficiency vs. Flow Ratio
5.4-9	Jet Pump Characteristic Curve
5.4-10	Jet Pump Head Ratio vs. Area Ratio
5.4-11	Jet Pump Flow Ration vs. Area Ratio
5.4-12	Subcooling Effect on Jet Pump Performance
5.4-13	Jet Pump Full Scale Performance Under Cavitating Environment Conditions
5.4-14	Pressure Rise in Jet Pump Mixing Chamber During LOCA
5.4-15 through 15.4-21	Deleted
5.4-22	Shutdown Reactor Cooling Piping — Simplified Diagram
5.4-23 and 15.4-24	Deleted
5.4-25	Reactor Water Cleanup Piping — Simplified Diagram
5.4.26 and 15.4-27	Deleted
5.4-28	Reactor Head Cooling System
5.4-29	Head Cooling Spray Nozzle

5.0 REACTOR COOLANT SYSTEM AND CONNECTED SYSTEMS DRAWINGS CITED IN THIS CHAPTER*

* The listed drawings are included as "General References" only; i.e., refer to the drawings to obtain additional detail or to obtain background information. These drawings are not part of the UFSAR. They are controlled by the Controlled Documents Program.

DRAWING*	SUBJECT
M-2	General Arrangement, Main Floor Plan
M-2A	General Arrangement, Off-Gas Recombiner Rooms
M-3	General Arrangement, Mezzanine Floor Plan
M-4	General Arrangement, Ground Floor Plan
M-5	General Arrangement, Basement Floor Plan
M-6	General Arrangement, Reactor Floor Plans
M-7	General Arrangement, Sections "A-A" and "B-B"
M-8	General Arrangement, Sections "C-C" and "D-D"
M-9	General Arrangement, Sections "E-E" and "F-F"
M-10	General Arrangement, Crib House
M-10A	General Arrangement, Off-Gas Filter Building
M-10B	General Arrangement, Maximum Recycle Radwaste Building
M-10C	General Arrangement, Radwaste Solidification Building
M-10D	General Arrangement, Modified Off-Gas System Turbine Building
M-10E	General Arrangement, Makeup Demineralizer Facility
M-12	Diagram of Main Steam Piping Unit 2
M-14	Diagram of Reactor Feed Piping Unit 2
M-15	Diagram of Condensate Piping Unit 2
M-16	Diagram of Condensate Booster Piping Unit 2
M-25	Diagram of Pressure Suppression Piping Unit 2
M-26	Diagram of Nuclear Boiler and Reactor Recirculation Piping Unit 2
M-27	Diagram of Core Spray Piping Unit 2
M-28	Diagram of Isolation Condenser Piping Unit 2
M-30	Diagram of Reactor Water Cleanup Piping Unit 2
M-32	Diagram of Shutdown Reactor Cooling Piping Unit 2
M-33	Diagram of Standby Liquid Control Piping Unit 2
M-48	Diagram of Reactor Water Cleanup Piping Unit 2
M-345	Diagram of Main Steam Piping Unit 3
M-347	Diagram of Reactor Feed Piping Unit 3
M-348	Diagram of Condensate Piping Unit 3
M-349	Diagram of Condensate Booster Piping Unit 3
M-356	Diagram of Pressure Suppression Piping Unit 3
M-357	Diagram of Nuclear Boiler and Reactor Recirculation Piping Unit 3
M-358	Diagram of Core Spray Piping Unit 3
M-359	Diagram of Isolation Condenser Piping Unit 3
M-361	Diagram of Reactor Water Cleanup Piping Unit 3
M-363	Diagram of Shutdown Reactor Cooling Piping Unit 3
M-364	Diagram of Standby Liquid Control Piping Unit 3
M-372	Diagram of Reactor Water Cleanup Piping Unit 3
M-3658-1	Hydrogen Addition System, Hydrogen Injection Subsystem
M-2658-2	Hydrogen Addition System, Oxygen Injection Subsystem
M-3670-3	Diagram of Hydrogen Addition Piping Hydrogen Area Leak Detection Subsystem

5.0 REACTOR COOLANT SYSTEM AND CONNECTED SYSTEMS

5.1 SUMMARY DESCRIPTION

The equipment and evaluations presented in this chapter are applicable to either unit. When the data presented apply only to one unit, the applicable unit is identified.

The purpose of the boiling water reactor is to generate steam from the light water moderator and coolant to drive the main turbine and generator to produce electricity. The topics of the reactor coolant system (RCS) and connected systems discussed in this chapter include the reactor coolant system pressure boundary (RCPB) integrity, the reactor pressure vessel (RPV) and appurtenances, and the major RCPB allied systems. Pertinent design information for some of the major RCS components is presented in Table 5.1-1.

The reactor coolant system includes those systems and components which contain or transport reactor coolant, in the form of water or steam, to and from the reactor pressure vessel. These systems form a major portion of the reactor coolant pressure boundary. Chapter 5 provides information regarding the RCS and pressure-containing appendages out to and including the outermost isolation valve in the main steam and feedwater piping. The major components within the RCS are the reactor vessel; the reactor coolant recirculation system with its pumps, piping, and valves; the relief valves (RVs); the safety valves (SVs); the safety relief valve (SRV); the feedwater and steam piping; the feedwater and steam piping isolation valves; and portions of reactor auxiliary systems piping (see Figure 5.1-1). In addition, the isolation condenser, the reactor water cleanup system, the hydrogen water chemistry system, and the shutdown cooling system are included and addressed in Section 5.4.

The RCPB, as defined in 10 CFR 50.2, includes all those pressure-containing components (such as the RPV, piping, pumps, and valves) which are part of the RCS or are connected to the RCS up to and including any and all of the following:

A. The outermost containment isolation valve in system piping which penetrates the primary containment;

B. The second of the two valves normally closed during normal reactor operation in system piping (such as vent and drain lines on the reactor recirculation system) which does not penetrate the primary containment; and

C. The RCS safety relief valve, relief valves, and safety valves.

The RCPB extends to and includes the outermost containment isolation valve in the main steam and feedwater piping.

The integrity of the RCPB is addressed in Section 5.2. Items of discussion include the overpressurization protection system, the RCPB materials, and the reactor water chemistry including the hydrogen water chemistry program. Inservice inspection and inservice testing programs are also addressed. Numerous leakage detection methods are also addressed.

The reactor vessel and its appurtenances are addressed in Section 5.3. Items of discussion include the vessel materials of construction, compliance with fabrication codes and regulatory guides, and methods of fabrication. Sensitized stainless steel and intergranular stress corrosion cracking (IGSCC) associated with the safe ends and vessel internal brackets are addressed in Section 5.3; the reactor vessel materials surveillance program for the shift in the nil ductility transition (NDT) temperature is also covered in Section 5.3. The NDT temperature effect on the pressure-temperature operating curves is also addressed. Compliance with the intent of 10 CFR 50, Appendices G and H is also addressed.

The associated systems interfacing with or acting as a part of the RCS are addressed in Section 5.4. The systems and/or components discussed are the reactor recirculation system, the hydrogen water chemistry system, the isolation condenser, the main steam line isolation system and flow restrictors, the reactor shutdown cooling system, the reactor water cleanup system, and the main steam line and feedwater piping up to and including the outermost isolation valves. The main steam system, feedwater system, and condensate system are addressed in more detail in Chapter 10.

5.1.1 Schematic Flow Diagram

The typical reactor coolant system is shown in Figure 5.1-1. Nominal flowrates, temperatures, and pressures for both units are listed. Coolant volumes are listed in Table 5.1-3.

5.1.2 Piping and Instrumentation Diagrams

The P&IDs applicable to the RCS and connected systems are identified in Table 5.1-2. This table is organized according to the drawing topic first and then the applicable unit.

5.1.3 Elevation Drawings

The elevation drawings and plan view section drawings for the RCS and other associated equipment are addressed in Drawings M-2 through M-10, M-2A, and M-10A through M-10E.

Table 5.1-1

REACTOR COOLANT SYSTEM DATA

Reactor Vessel	
Internal height	68 ft, 7⅝ in.
Internal diameter	20 ft, 11 in.
Design pressure and temperature	1250 psig at 575°F
Maximum heatup/cooldown rate	100°F in 1-hour period.
Maximum uncontrolled cooldown rate (based on one-time transient)	240°F/hr
Base metal material	SA-302 Grade B, modified with Code Case 1339
Wall thickness	6⅛ in. minimum
Design lifetime	40 years
Base metal initial NDT temperature	40°F maximum
Cladding material	Weld-deposited E-308L electrode
Cladding thickness	⅛-in. minimum
Design code	ASME Section III, Class A
Recirculation Loops	
Number	2
Material	
Unit 2	304 stainless steel
Unit 3	316NG stainless steel
Design pressure and temperature	
Suction	1175 psig at 565°F
Discharge	1325 psig at 580°F
Design code	ASME Section I and USAS B 31.1.0
Recirculation Pumps	
Number	2
Type	Vertical, centrifugal, single-stage
Power rating	6000 hp

Table 5.1-1 (Continued)
REACTOR COOLANT SYSTEM DATA

Speed	Variable
Flowrate	45,000 gal/min
Design pressure and temperature	1450 psig at 575°F
Developed head	570 ft
Design code	ASME Section III, Class C
<u>Recirculation Valves</u>	
Number	
Unit 2	8
Unit 3	4
Type	Motor-operated gate
Design code	ASME Section I and USAS B 31.1.0
<u>Jet Pumps</u>	
Number	20
Material	Stainless steel
Overall height (top of nozzle to diffuser discharge)	18 ft, 7 in.
Diffuser diameter	20¾ in.
Design	APED-5460 (General Electric)
<u>Main Steam Lines</u>	
Number	4
Diameter	20 in.
Material	Carbon steel
Design code	ASME Section I and USAS B 31.1.0

Table 5.1-1 (Continued)
REACTOR COOLANT SYSTEM DATA

Electromatic Relief Valves	
Number	4
Capacity (each)	540,000 lb/hr
Pressure setting	≤ 1112 or ≤1135 psig
Design code	USAS B 31.1.0
Target Rock Safety Relief Valve	
Number	1
Capacity	622,000 lb/hr
Pressure setting, relief	≤1135 psig
Pressure setting, safety	1135 psig
Design code	ASME Section III, 1968
Safety Valves	
Number	8
Capacity (each)	Varies with setpoint - see Table 5.2-1
Pressure setting	Varies 1240 to 1260 psig
Design code	ASME Section III and USAS B 31.1.0
ISOLATION CONDENSER	
Number	1
Number of tube bundles	2
Design pressure	
Shell	25 psig at 300°F
Tubing	1250 psig at 575°F
Design code	
Shell	ASME Section VIII
Tubing	ASME Section III, Class A

*See Table 5.2-1 for specific value setpoint information

Table 5.1-2

APPLICABLE REACTOR COOLANT SYSTEM P&IDs

Topic	Unit 2 P&ID No.	Unit 3 P&ID No.
Main steam piping	M-12	M-345
Standby liquid control piping	M-33	M-364
Condensate piping	M-15	M-348
Condensate booster piping	M-16	M-349
Reactor feed piping	M-14	M-347
Pressure suppression piping	M-25	M-356
Reactor recirculation piping	M-26	M-357
Core spray piping	M-27	M-358
Isolation condenser piping	M-28	M-359

Table 5.1-3

Coolant Volumes (ft^3)

	Unit 2	Unit 3
Lower Plenum	2196	2196
Upper Plenum	1216	1216
Steam Dome	6672	6672
Steam Line Piping (up to MSIVs)	1759	1759

5.2 INTEGRITY OF REACTOR COOLANT PRESSURE BOUNDARY

This section addresses measures employed to provide and maintain the integrity of the reactor coolant pressure boundary (RCPB) for the plant design lifetime as given in and required by the Technical Specifications.

5.2.1 Compliance with Codes and Code Cases

The applicable ASME Code edition, addenda, and code cases and other applicable codes and standards editions used in the manufacture, fabrication, and installation of the reactor vessels, piping, valves, and pumps of the RCPB components are addressed in Section 3.2.

The reactor vessels and the tube sheets of the isolation condensers are designated as ASME Section III, Class A.

The degree of compliance to the 34 supplementary criteria in "Tentative Regulatory Supplementary Criteria for ASME Code Constructed Nuclear Pressure Vessels," issued by the NRC in Press Release No. IN-817, dated August 25, 1967, is covered in a document submitted to Harold L. Price, USAEC on March 13, 1968, by George Stathakis, GE. The title of this document is "GE Comments on the Tentative Regulatory Supplementary Criteria for ASME Code Constructed Nuclear Pressure Vessels."

5.2.2 Overpressure Protection

The Dresden Extended Power Uprate Project included re-evaluating a broad set of most limiting transient events at the power uprated conditions. The Limiting Transient Overpressure Events which are reanalyzed at 2957 MWt included the MSIV Closure with direct scram, the single MSIV closure, the Load Rejection with Bypass, the Slow Recirculation Increase and the Fast Recirculation Increase. In addition, a Turbine Trip without Bypass with a high flux scram was performed to reconfirm that the MSIV closure with flux scram was the limiting event for the ASME overpressure analysis. Specific diagrams showing the results of these transients are contained in GE-NE-A22-00103-10-01 Revision 0 “Dresden and Quad Cities Extended Power Uprate Task T0900: Transient Analysis.”

Overpressurization of the reactor coolant system due to high reactor power is prevented by the design of the reactor control systems and the reactor safety systems. These include the following:

A. High-pressure reactor scram;

B. High-neutron flux scram;

C. Turbine-generator load rejection scram;

D. Operation of the isolation condenser;

E. Operation of the turbine bypass system;

F. Operation of the relief valves;

G. Operation of the safety valves;

H. Operation of the high pressure coolant injection (HPCI) system;

I. Main steam isolation valve (MSIV) closure scram; and

J. Operation of the dual-function safety relief valve (SRV).

5.2.2.1 Design Basis

The performance objective of the relief and safety valves is to prevent overpressurizing the reactor vessel. The relief valves are also designed to rapidly depressurize the reactor vessel so that the core spray and low pressure coolant injection (LPCI) systems can function to mitigate small line break events. To achieve these objectives, the relief and safety valves have the capacities and setpoints given in Table 5.2-1.

The relief valves are sized to remove the generated steam flow rapidly upon closure of the turbine stop valves or turbine control valves coincident with failure of the turbine bypass system.

The safety valves are sized to protect the pressure vessel against overpressure during a MSIV closure without direct scram on valve position event, a turbine trip with a failure of the turbine bypass system and without direct scram on turbine stop valve position event, or a load reject with a failure of the turbine bypass system and without direct scram on turbine control valve fast closure event. The ASME Code requires that each vessel designed to meet ASME Section III be protected from the consequence of pressure and temperature in excess of design conditions. The United States of America Standard (USAS) B-31.1.0 Code for Pressure Piping also requires overpressure protection, as well as ASME Section I. Both the USAS B-31.1.0 Code and ASME Section I apply to the RCPB steam and feedwater piping up to the first containment isolation valve.

5.2.2.2 Design Evaluation

Upon closure of the MSIVs, while the reactor is at 100% power, the isolation condenser system cannot remove energy rapidly enough to prevent a large pressure rise. See Section 5.4 for details of the design of the isolation condenser system. The relief valves are provided to remove sufficient energy from the reactor to prevent the safety valves from lifting.

In compliance with ASME Code Section III, the safety valves must be set to open at no higher pressure than 105% of design pressure, and at least one safety valve pressure setting shall not be greater than the design pressure of the vessel. The setpoints of the safety valves comply with the ASME Code, taking into account static heads and dynamic losses.

NUREG 0737, Item II.D.1, required additional evaluation of relief and safety valves. Valve testing performed in response to Item II.D.1 provided additional assurance that the relief and safety valves will perform their intended function. Further, the testing and associated analyses indicate that significantly lower dynamic loads occur during water discharge events than during high pressure steam discharge cases. Therefore, sufficient margin is available to accommodate the dead weight of water-filled lines as would be present during alternate shutdown cooling mode.

The overpressure protection system must accommodate the peak transient pressure during the most severe licensing basis pressurization transient. Westinghouse methodology determines the most limiting pressurization transient each cycle. Westinghouse considers the MSIV closure without direct scram on valve position event, a turbine trip with a failure of the turbine bypass system and without direct scram on turbine stop valve position event, and a load reject with a failure of the turbine bypass system and without direct scram on turbine control valve fast closure event. Also, for the turbine bypass valves equipment out of service option, a feedwater controller failure event with the failure of turbine bypass valves and without direct scram off turbine stop valve closure is analyzed. Historically, the most severe transient is the closure of all the main steam line isolation valves followed by a reactor scram on high neutron flux. GNF methodology considers only the main steam line isolation valve (MSIV) closure followed by a reactor scram on high neutron flux. Transient analyses at Extended Power Uprate operating conditions using GE methodology were performed to reconfirm that the set of limiting events has not changed

(Reference 7). The analysis results demonstrate that the design safety valve capacity is capable of maintaining reactor pressure below the ASME Code limit of 110% of the reactor pressure vessel design pressure.

5.2.2.2.1 Determination of the Number of Safety Valves

In determining the minimum safety valve capacity to conform to the ASME Code limits, no credit was allowed for turbine trip scram or for power-operated, pressure-relieving devices. Credit was taken for subsequent protection action such as neutron flux scram or high reactor pressure scram. Sizing was based on a full power turbine trip with bypass system failure, starting from turbine design conditions of operation. Based on historical analysis, the minimum number of safety valves needed for conformance to the above criteria was three. An additional design margin was allowed in choosing eight safety valves. A ninth was essentially added when one of

the five original electromatic relief valves was replaced with a Target Rock dual-purpose safety relief valve.

Using the valve minimum capacities, a reliability analysis was conducted. Figure 5.2-1 shows some of the results of this analysis. Plotted on the figure are curves showing the probability of exceeding the ASME Code limits versus the number of safety valves installed. The curves are the mean values between the best and worst reliability data for the different scram or no-scram conditions, where 10^{-6} means exceeding code once in a million incidents. The 10^{-5} threshold value is an IEEE-recommended scram reliability figure applied to the nuclear industry.

As stated previously, based on historical analysis only three valves were required to meet ASME Code requirements. Eight valves provide relief of 44% of turbine design steam flow. (The Target Rock safety relief valve is not included, therefore, considering this valve results in additional conservatism.) The additional valves provide further pressure relief margin and increase the reliability of the safety valve system. The GE engineering design is well within the ASME pressure protection requirements when only the slower pressure scram rather than neutron flux scram is operative, thus adding conservatism to the design. In addition, the eight safety valves assure that the probability of the safety valve system (with scram credit) exceeding the code limits is less than the recommended value of 10^{-5}.

A cycle specific ASME overpressurization evaluation is performed each reload. The cycle specific reload documents should be reviewed for the applicable assumptions and results.

5.2.2.2.2 Relief Valve Sizing

The relief valves were sized by assuming a turbine trip with trip scram but with a failure of the turbine bypass system. The results for this transient are shown in Figure 5.2-2 and Reference 7. The sudden closure of the stop valves with no initial bypass flow effectively doubles the initial rate of increase of primary system pressure. Scram is initiated immediately from the stop valve closure.

The vessel pressure would peak at 1292 psig. Peak pressure in the steam line at the safety valve location would be approximately 1253 psig and is 13 psi above the lowest safety valve setpoint of 1240 psig; therefore,

at an uprated power level of 2957 MWt[7] safety valve actuation would occur for this very severe reactor isolation. Long-term core cooling would be provided by the isolation condenser system.

5.2.2.2.3 Safety Valve Steam Flow Capacity

For power uprate, the safety valves steam flow capacity was determined based on the following assumptions:

A. The reactor is at 2957 MWt when MSIV closure occurs;

B. The relief valves fail to open;

C. Direct reactor scram (based on MSIV position switches) fails; and

D. The backup scram due to high neutron flux or high vessel pressure shuts down the reactor.

E. The Target Rock Safety Mode is out of service.

Pressure increases following reactor isolation until limited by the opening of the safety valves. The peak allowable pressure is 1375 psig (according to ASME Section III, equal to 110% of the vessel design pressure of 1250 psig). The safety valve setpoints are spread in 10-psi increments between 1240 and 1260 psig. The Target Rock safety function is set at 1135 psig. These setpoints satisfy the ASME Code specifications that the lowest safety valve be set at or below vessel design pressure and that the highest safety valve be set to open at or below 105% of vessel design pressure.

The valves have a nameplate combined capacity equal to 44% of turbine design flow.

The resulting transient for the MSIV Closure, Flux Scram are shown on Figure 5.2-3 at 102% of 2957 MWt and 108% core flow. Figure 5.2-3 shows the resulting transients for neutron flux, average surface heat flux, core inlet flow, core inlet subcooling, reactor vessel steam flow, turbine flow, feedwater flow, reactor vessel pressure changes, safety valve flow, reactor vessel coolant level and reactivity. The rapid pressurization caused by the reactor vessel isolation (about 100 psi/s) would reduce the moderator void content of the core and would produce the sharp neutron flux spike before the scram shuts down the reactor. Peak fuel surface heat flux would be significantly slower, reaching a peak of 129% at about 3 seconds. Vessel dome pressure would reach about 1336 psig with the peak at the bottom of the vessel near 1358 psig. Therefore, the 44% capacity safety valves provide adequate margin below the peak allowable vessel pressure of 1375 psig in the lower plenum.

5.2.2.2.4 Loadings and Analyses

The four electromatic relief valves and the Target Rock combined safety relief valve for each unit have separate discharge lines from the valve to the torus where the lines discharge through a T-quencher under the water surface. The discharge loadings and reactions of the relief valves and the subsequent analyses are addressed in Section 3.9 which also includes the relief valve discharge line transient analyses.

5.2.2.2.5 Safety Relief Valve Discharge Line Vacuum Relief Devices

There are two vacuum relief devices on each of the five relief valve discharge lines. These devices relieve the vacuum created upon steam condensation in the line so that the column of water at the line outlet is minimized.

5.2.2.3 Piping and Instrumentation Diagrams

The piping and instrumentation diagrams are presented in Drawings M-12, Sheet 1, M-25, and M-345, Sheet 1.

5.2.2.4 Equipment and Component Description

Four of the five reactor relief valves are electromatic and are actuated automatically on a high reactor vessel pressure (two at a less than or equal to 1112 psig and two at less than or equal to 1135 psig). They can also be operated manually from the control room. The fifth relief valve is a Target Rock safety relief valve which also actuates automatically on a high reactor vessel pressure or upon a manual signal from the control room. This valve has a relief setpoint of less than or equal to 1135 psig and a safety setpoint of 1135 psig. The blowdown from each relief valve is routed through a separate line to the torus and discharge below the surface of the water through a T-quencher. For protection against small line breaks, actuation of the relief valves also occurs from coincident signals of low-low water level, high drywell pressure, and LPCI or core spray pump discharge pressure of at least 100 psig. See Section 7.3.1.4 for more details on the control logic. Actuation of the relief valves by the ADS is governed by a 120-second delay timer. This protection, redundant to the HPCI system, is discussed more fully in Section 6.3.

The reactor relief valves are located on the steam lines upstream of the first isolation valves. There are two independent sensor systems supplying the signals to all valves to operate, and all valves are powered by the same power source, which is separate from the HPCI power source.

Each of the four relief valves and the dual-function safety relief valve discharge to the torus via dedicated (one per valve) relief valve discharge lines (RVDLs). Analyses have shown that upon valve closure, steam remaining in the RVDL can condense, thereby creating a vacuum which draws suppression pool water up into the discharge line. This "elevated water leg" condition is quickly alleviated by operation of the vacuum breakers on the RVDLs; however, the condition is of concern since a subsequent actuation in the presence of an elevated water leg can result in unacceptably high thrust loads on the discharge piping.

To prevent these unacceptable loads, the setpoints, control logic, and administrative controls for the relief and the safety relief valves have been designed to ensure that each valve which closes remains closed until the normal water level in the RVDL is restored. Prevention of these unacceptable loads is accomplished by first establishing opening and closing setpoints such that all pressure-induced subsequent actuations (after the first actuation) are limited to the two lowest set valves (203-3B and 203-3C). These two valves which are on separate steam lines are equipped with additional logic which functions in conjunction with the setpoints to inhibit valve reopening (via reactor repressurization or the automatic depressurization system) for at least 8 seconds following each closure. (This time delay compares with a calculated worst-case elevated water leg duration time of 6.3 seconds.) Administrative controls ensure an operator does not operate the valve manually. This combination of setpoint selection, control logic design, and administrative controls is sufficient to ensure that no credible scenario can result in actuation of a relief or safety relief valve in the presence of an elevated water leg.

The reactor safety valves are located on the steam lines inside the primary containment. They are balanced, spring-loaded-type safety valves which discharge directly to the drywell atmosphere. The safety valves are the final protection against overpressurizing the vessel and are sized to prevent the reactor pressure from exceeding the pressure limitations specified in the ASME Code. Sizing of the safety valves (see Section 5.2.2.2.3) assumed credit for either a flux or pressure scram of the reactor from full power but took no credit for the electromatic relief valves following closure of the MSIVs. The number of valves with their setpoints and capacities are listed in Table 5.2-1.

5.2.2.5 Mounting of Pressure Relief Devices

The relief valves, the safety valves, and the safety relief valve are mounted on the steam lines upstream of the isolation valves inside containment. These valves are flange mounted for ease of compliance with the testing requirements specified in the Technical Specifications. Distribution of these valves among the four steam lines on each unit is shown in Drawings M-12, Sheet 1 and M-345, Sheet 1.

5.2.2.6 Applicable Codes to Maintain Reactor Coolant Pressure Boundary Structural Integrity

The structural integrity of the RCPB is maintained at the level required by ASME Section XI. The component inservice inspection (ISI) program, updated every 120 months, is performed in accordance with ASME Section XI rules as required by 10

CFR 50.55a(g), except where specific written relief is approved by the NRC pursuant to 10 CFR 50.55a(g)(6)(i).

5.2.2.7 Material Specification

Reactor coolant pressure boundary materials, including materials for the overpressurization protection system, are addressed in Subsection 5.2.3.

5.2.2.8 Process Instrumentation

The process instrumentation for the safety valves, the relief valves, and the safety relief valve is shown in Drawings M-12 and M-345. Acoustic monitors provide position indication and leakage detection (see Section 5.2.5.7) for all relief and safety valves. Temperature monitors with a range of 0 to 600°F provide additional backup information on all relief and safety valves.

5.2.2.9 System Reliability

Safety valve and relief valve sizing uses very conservative assumptions. The safety valve sizing relies on relief valve availability, turbine bypass valves, and the method of reactor scram. Further discussion about failures and their effects are addressed in Section 15.2.

5.2.2.10 Environmental Equipment Qualification

Environmental equipment qualification (EQ) testing was performed to verify the operability of the electromatic main steam relief valves actuators under accident conditions. See Section 3.11 for additional details on equipment qualification.

5.2.2.11 Inspection and Testing

Dresden Station has a preventive maintenance program for the relief valves. The requirements are such that one-half of the safety valves shall be bench-checked each refueling outage, and all relief valves shall be checked for set pressure each refueling outage. In addition; the pressure switches that actuate the Electromatic Relief Valves, including Target Rock Valve, are calibrated periodically to ensure drift errors are held within specified limits. Inservice inspection is performed as required by ASME Section XI and the station's inservice inspection program. Additional details of the station's inservice inspection program is discussed in Section 5.2.4.

5.2.3 Reactor Coolant Pressure Boundary Materials

5.2.3.1 Material Specifications

The principal pressure-retaining materials and the appropriate material specifications for the reactor coolant pressure boundary components are defined in GE design and purchase specifications or in the specifications of other suppliers of RCPB components. Typical ASME or ASTM material specifications for some components are given in Table 5.2-2.

Stainless steel material in the reactor vessels which were subjected to stress-relieving heat treatment are given in Table 5.2-3. The Unit 2 reactor vessel entered service with the safe ends in this furnace-sensitized condition. Some of the furnace-sensitized stainless steel in the Unit 2 reactor vessel (see Table 5.2-4) has since been replaced. The material remaining is shown in Table 5.2-5. Material failure reports were received that led to a decision to change the material condition for the Unit 3 reactor vessel. As a result of the extensive modifications listed in Table 5.2-6, the Unit 3 reactor vessel entered service without much of the sensitized stainless steel exposed to the reactor coolant, liquid or steam. The two vessel 28-inch recirculation outlet safe ends were replaced during the time that the recirculation loops were replaced (see Table 5.2-7).

Replacement of stainless steel recirculation piping material at Unit 3 was accomplished using Type 316 NG with maximum contents of 0.02 wt.% carbon and 0.10 wt.% nitrogen (0.06 wt.% nitrogen minimum). This material meets the ASME Code strength requirements for regular grades of Type 316 stainless steel and the guidelines set forth in NUREG-0313, Revision 1. Some reactor vessel safe ends as shown in Table 5.2-7 were replaced in Unit 3 (see Reference 11).

5.2.3.2 Compatibility with Reactor Coolant

The importance of providing and maintaining appropriate water chemistry conditions in the reactor coolant of BWR nuclear power plants is well established and have been emphasized by the NRC in Generic Letter 88-01 and approval of BWR Vessel and Internals Project, Technical Basis for Revisions to Generic Letter 88-01 Inspection Schedules (BWRVIP-75). During the 1980's, most operating BWRs experienced pipe cracking problems that resulted in significant loss of availability and increased the total personnel radiation exposure associated with inspection and repair. The cause of these problems has been intergranular stress corrosion cracking (IGSCC) which results from the simultaneous occurrence of an aggressive environment, particular materials, and stress conditions. A contributing cause of these problems has been the formation of locally corrosive environments as the result of the ingress of impurities during operation. EGC has implemented a water chemistry program at Dresden to help control IGSCC.

During normal reactor operation at power the reactor coolant conductivity is less than or equal to 5 μmho/cm and the chloride ion concentration is maintained at less than or equal to 0.5 ppm. Other parameters for the reactor coolant are included in the Technical Requirements Manual. The reactor coolant makeup water supply is from the contaminated condensate storage tanks. The typical water quality in the condensate storage tanks is listed in Table 5.2-8.

5.2.3.2.1 Boiling Water Reactor Water Chemistry

The BWR water chemistry control program establishes achievable ranges for water chemistry parameters where initiation and growth of IGSCC is mitigated. Compliance with the program's impurity concentrations has been shown to reduce the rate of IGSCC and reduce the probability of initiating new cracks. The initial data indicated that IGSCC in the reactor recirculation piping was mitigated by controlling the impurity concentrations within achievable ranges combined with injection of hydrogen into the feedwater to reduce free oxygen. This approach to the prevention of cracking is called hydrogen water chemistry (HWC).

In addition to reducing IGSCC, the appropriate control of water chemistry also assists in controlling radiation buildup, minimizing fuel failure, and minimizing damage to the turbine caused by water chemistry.

Specific corporate water chemistry control requirements have been implemented at Dresden. These requirements reflect the current understanding of the role of chemical transport, impurity concentration, materials of construction, corrosion behavior, chemical analytical methods, and industry practice regarding the operation and integrity of the reactor coolant system. The specific requirements were primarily taken from the BWR Owners Group and Electric Power Research Institute Water Chemistry Guidelines,[1,2] existing GE chemistry guidelines, and addressed the known or suspected contaminant concerns at EGC's BWRs.

The HWC program (see Section 5.4.3 for details concerning the hydrogen addition system) has been in use at Dresden Unit 2 since 1983. The HWC Program was implemented on Dresden Unit 3 in 1996. Hydrogen water chemistry has been demonstrated in industry programs to effectively mitigate IGSCC.

Noble Metal Chemical Addition (NMCA) has been developed by General Electric as a method to enhance the effectiveness of the Hydrogen Water Chemistry (HWC) in mitigating Intergrannular Stress Corrosion Cracking (IGSCC) in vessel components. Additionally, use of the NMCA will lower injection rates of the HWC, which in turn reduces plant radiation exposure over the life of the plant. The NMCA process deposits a very thin layer of noble metals onto all wetted surfaces of the vessel during the injection process. The treated surfaces will behave catalytically and promote oxidant-hydrogen recombination. This results in low corrosion potential of components at low hydrogen injection rates. Higher reactor water conductivity is anticipated during application due to the effect of non-corrosive noble metals.

The Reactor Coolant System chemistry limits are listed in Table 5.2-9.

The long term effects of the NMCA will be monitored utilizing a Durability Monitoring System (DMS) and Data Acquisition System (DAS). A recirculation sample line flow is obtained from the Reactor Water Cleanup System and passes through the DMS. The DAS collects data from the DMS and plant operational parameters.

5.2.3.2.1.1 Training

A training program for personnel involved in water chemistry control is required in order to implement the corporate policy. The goal of this program is to improve the overall awareness among station personnel regarding the need for chemistry control. Personnel required to be trained include all chemistry staff, chemistry technicians, licensed operators, and selected technical staff and maintenance personnel.

5.2.3.2.2 Compatibility of Construction Materials with Reactor Coolant

The materials of construction exposed to the reactor coolant consist of the following:

A. Solution-annealed wrought, forged, and cast austenitic stainless steels Types 304, 304L, 316, 316L, and 315NG;

B. Furnace-sensitized and heat-affected wrought and forged austenitic stainless steels Types 304, 304L, 316, 316L, and 316NG;

C. Nickel base alloys - Inconel 600 and Inconel 750X;

D. Carbon steel and low-alloy steel (forged, wrought, and cast);

E. Some 400-series martensitic stainless steel (all tempered at a minimum of 1100°F);

F. Colmonoy and Stellite hardfacing material;

G. Type 308, 308L, 309, and 309L stainless steel, Inconel 82 and Inconel 182, and ENiCrFe-3 weld filler metal;

H. Type 308 and 308L weld overlay material or corrosion resistant cladding material; and

I. Inconel 82 or Inconel 182 weld filler metal.

These materials of construction, with the exception of the furnace-sensitized and heat-affected wrought and forged austenitic stainless steel Types 304, 316, 304L, 316L, and 316NG; Inconel 600; and Inconel 182, are generally resistant to stress corrosion cracking when exposed to the reactor coolant. The as deposited weld and cast materials with at least 5% delta ferrite content are considered to be resistant to IGSCC. General corrosion of these materials, except carbon and low-alloy steel, is negligible. Conservative corrosion allowances are provided for all exposed

surfaces of carbon and low-alloy steels. An aggressive program has been implemented to account for the IGSCC susceptible materials within the RCPB.

Contaminants in the reactor coolant are controlled to very low limits set by the reactor water quality specifications. No detrimental effects occur on any of these materials from allowable contaminant levels in high-purity reactor coolant. Radiolytic products generally have no adverse effects on these materials except that the nickel in nickel-containing alloys may be leached from the alloy by the radiolytic H_2O_2 formed in the reactor coolant.

The furnace-sensitized stainless steels and the heat-affected zones parallel to the welds in Type 304 stainless steels are susceptible to IGSCC. This has been observed especially with the Type 300 series stainless steels containing between 0.04% and 0.08% carbon content. The presence of oxygen (may be from radiolytic sources) and stress at the susceptible location contribute to the IGSCC. Control of these variables mitigate the effect of IGSCC.

5.2.3.2.3 Compatibility of Construction Materials with External Insulation and Reactor Coolant

The materials of construction exposed to external insulation are primarily as follows:

A. Solution-annealed austenitic stainless steels Types 304, 304L, 316, 316L, and 316NG;

B. Furnace-sensitized austenitic stainless steels Types 304, 304L, 316, and 316L;

C. Sensitized and solution-annealed stainless steel weld joints (heat-affected zones parallel to the weld and on both sides); and

D. Carbon and low-alloy steel.

Two types of external insulation are generally employed in nuclear power facilities. The first, reflective metal insulation, does not contribute to any surface contamination and has no effect on construction materials. The second, nonmetallic insulation, is used on stainless steel piping and components. The nonmetallic insulation, including asbestos in some areas, is also used on carbon and low-alloy steels. The nonmetallic insulation materials comply with the requirements of the following industry standards:

A. ASTM C692-71, "Standard Methods for Evaluating Stress Corrosion Effects of Wicking Type Thermal Insulation on Stainless Steel" (Dana Test); and

B. RDT-M12-1T, "Test Requirements for Thermal Insulating Materials for Use on Austenitic Stainless Steel," Section 5 (KAPL Test).

Chemical analyses are required to verify that the leachable sodium, silicate, and chloride in this insulation are within acceptable levels. The insulation is packaged in waterproof containers to avoid damage or contamination during shipment and storage.

Reactor coolant is high-purity, demineralized water without additives. As such, it is compatible with insulation materials and is not known to cause detrimental effects on materials of construction during leakage.

5.2.3.3 Fabrication and Processing of Ferritic Materials

This subsection describes the fabrication and processing of ferritic materials. The control of welding processes and material fracture toughness are addressed.

5.2.3.3.1 Fracture Toughness - Reactor Pressure Vessel

Fracture toughness data for the plate steel used in fabricating the reactor vessel shell and closure heads were obtained as required by the General Electric Specifications (Reference 9). Since fabrication of the vessel, different acceptance criteria have been issued, as well as 10 CFR 50, Appendix G, which require that pressure-temperature limits be established for reactor coolant system heatup and cooldown operations, inservice leak and hydrostatic tests, and normal reactor operation. These limits are required to ensure that the stresses in the reactor pressure vessel (RPV) remain within acceptable limits. They are intended to provide adequate margins of safety during any condition of normal operation, including anticipated operational transients.

Specific pressure-temperature limits, which indicate EGC's commitments regarding Generic Letter 88-11 and Regulatory Guide 1.99, Revision 2, are presented and discussed in Section 5.3.2.

5.2.3.3.2 Fracture Toughness - Reactor Coolant Pressure Boundary Components Exclusive of Reactor Pressure Vessel

Fracture toughness requirements were not generally required by the piping and component codes unless the purchase specifications stated the requirement. The systematic evaluation program for Dresden Unit 2 examined the requirements for some of these components.

The relief valves (electromatic and Target Rock) and the safety valves were exempted from fracture toughness requirements because ASME Section III, 1965 Edition, did not require impact testing on valves with inlet connections of 6 inches or less nominal pipe size.

Main steam isolation valves were also exempted from fracture toughness requirements because ASME Section III, 1965 Edition with Summer 1965 Addenda, did not require brittle fracture testing on ferritic pressure boundary components

when the system temperature was in excess of 250°F at 20% of the design pressure.

The recirculation pumps were exempted from the ASME Code and the USAS Code for pressure piping because of their classification as machinery. This is more completely discussed in Section 5.4.1.1.

5.2.3.3.3 Control of Welding

Fabrication welding is controlled through the use of approved and qualified welding procedures as required by the applicable fabrication codes. Certain welding processes require additional controls.

5.2.3.3.3.1 Control of Electroslag Weld Properties

Electroslag welding of longitudinal seams of the RPV was performed in accordance with ASME Section III, Code Case 1355. This code case and other code cases applying to materials and fabrication are identified in the vessel manufacturer's fabrication report and on the manufacturer's data report, Form N-1A. A detailed description of the electroslag welding process used on the reactor vessels is contained in Reference 10.

5.2.3.4 Fabrication and Processing of Austenitic Stainless Steels

This subsection provides information relative to fabrication and processing of austenitic stainless steel for components in the RCPB.

5.2.3.4.1 Avoidance of Stress Corrosion Cracking

Stress corrosion cracking in the austenitic stainless steels is avoided or mitigated as far as possible. Replacement material for piping, fittings, safe ends, thermal sleeves, and weld metal is of a type or grade that has demonstrated high resistance to oxygen-assisted stress corrosion in the as-installed condition. Such materials are the low-carbon (0.03% maximum) wrought austenitic stainless steels such as Types 304L and 316L, the cast grades CF-3, CF-8, CF-3M, and CF-8M (both 0.03% and 0.08% maximum carbon content), and stainless steel weld metal, usually Type 308-L. The weld and cast materials require at least 5% delta ferrite content. Use of Types 304 or 316 stainless steel in the solution-annealed condition is considered provided that solution annealing is done subsequent to welding or that, for field installation, the assembly weld is overlayed on the inner diameter with a corrosion-resistant cladding. This also applies to corrosion-resistant safe ends and thermal sleeves.

Methods which minimize tensile stresses to provide mitigation of IGSCC in austenitic stainless steel weldments include induction heating stress improvement, mechanical stress improvement, and heat sink welding.

5.2.3.4.1.1 Avoidance of Significant Sensitization

Solution-annealing of stainless steel, whether the low carbon grades of Type 304L or normal Type 304, eliminates sensitization. Solution annealing of assembly welds or the use of Type 308L corrosion resistant cladding on the interior weld and heat-affected zone surface minimizes the effects observed from sensitization.

5.2.3.4.1.2 Electroslag Welds

The reactor vessel fabrication report on electroslag welding (compared to Regulatory Guide 1.34) is contained in Reference 10.

5.2.3.5 Intergranular Stress Corrosion Cracking

The Unit 2 reactor vessel entered service with furnace-sensitized material exposed to the reactor coolant (see Table 5.2-3). The Unit 3 reactor vessel underwent several modifications to the furnace-sensitized material such as replacement of the safe ends (see Table 5.2-6) to mitigate IGSCC before entering service. Generic Letter 88-01, "NRC Position on IGSCC in BWR Austenitic Steel Piping," dated January 25, 1988, provides the NRC staff position and guidelines concerning the piping materials used for the RCPB such as the Unit 3 reactor recirculation system piping which was replaced in the 1980's.

5.2.3.5.1 Program to Mitigate Intergranular Stress Corrosion Cracking

EGC is pursuing an integrated program to mitigate IGSCC. This program is in compliance with the requirements of Generic Letter 88-01; Generic Letter 88-01, Supplement 1; NUREG-0313, Revision 2; and BWRVIP-75. Additionally, Dresden Station has committed to replacing IGSCC susceptible piping in the non-safety related portion of the RWCU system. The Unit 2 replacement was completed during D2R14. The Unit 3 replacement was completed during D3R14.

5.2.3.5.2 Augmented Inspection Programs

EGC's augmented inspection program for IGSCC conforms basically to the NRC positions on inspection schedules, methods, personnel, and sample expansion delineated in Generic Letter 88-01, and BWRVIP-75. Any variances from the NRC staff positions are reviewed and approved by the NRC.

EGC has an inspection program in place to monitor carbon steel piping systems for wall thinning in response to the NRC Generic Letter 89-08, "Erosion/Corrosion - Induced Pipe Wall Thinning."[3,4] The feedwater system piping is examined in accordance with NSAC-202L. See Section 10.4 for further coverage of the feedwater system. The main steam line is exempted because it operates with dry or saturated steam and has little to no susceptibility to erosion/corrosion.

5.2.3.5.3 Technical Specification Amendment

The inservice inspection (ISI) program, in lieu of the Technical Specifications, contains a statement of EGC's conformance with Generic Letter 88-01, NUREG-0313, Revision 2[5], and BWRVIP-75.

5.2.3.5.4 Improved Leak Detection

Leakage detection limits and time periods were changed to reflect that the reactor coolant system leakage shall be within the Technical Specification Requirements. The leakage shall be monitored and recorded at least once per shift, not to exceed 12 hours. If this leakage limit is exceeded, the unit shall comply with the applicable Technical Specification LCO. At least one primary containment sump collection and flow monitoring system shall be operable. With the primary sump collection and flow monitoring system inoperable, comply with the applicable Technical Specification LCO.

5.2.3.5.5 NRC Notification

The NRC will be notified of the following conditions identified during examinations in accordance with Generic Letter 88-01 and BWRVIP-75:

A. Flaw indications exceeding the acceptance criteria of applicable ASME Section XI, Subsection IWB-3500;

B. A change found in the condition of the welds previously known to have flaw indications; and

C. The evaluation by the EGC Engineering Department for the above conditions for continued operation and/or the necessary corrective action to be taken.

5.2.4 Inservice Inspection of Reactor Coolant Pressure Boundary

The inservice inspection program delineates and implements the requirements of 10 CFR 50.55a, and the ASME Code, Section XI, 1995 Edition with the 1996 Addenda. Certain requirements are impractical to perform because of the design, component geometry, and materials of construction. Relief from such requirements is granted in accordance with 10 CFR 50.55a(g)(6)(i) following an NRC review of the request.

5.2.4.1 System Boundaries Subject to Inspection

The construction permits for Dresden Units 2 and 3 were issued on January 10, 1966, and October 14, 1966, respectively. At that time, ASME Section III covered only nuclear pressure vessels. Associated piping up to and including the first isolation or check valve was designed, fabricated, and installed in accordance with ASME Section I and USAS B31.1. The other piping, pumps, and valves were built primarily to the rules of USAS B31.1-1967. Consequently, the Dresden Station ISI program does not contain any ASME Section III, Code Class 1, 2, or 3 systems.

The system classifications used for the ISI program are based on the requirements of 10 CFR 50 and Regulatory Guide 1.26, Revision 3. These classifications were developed for the sole purpose of assigning appropriate inservice inspection requirements for components containing water, steam, and radioactive waste.

Components within the reactor coolant pressure boundary, as defined in 10 CFR 50.2, are designated Inservice Inspection Class 1 as determined by 10CFR 50.55a, with the exceptions allowed by 10CFR50.55a(c). Other safety related components are designated as Inservice Inspection Class 2 or 3 in accordance with the guidelines of Regulatory Guide 1.26, Revision 3. Pursuant to 10 CFR 50.55a(a)(1), the inservice inspection requirements of ASME Section XI are assigned to these components, within the constraints of existing plant design.[6]

5.2.4.2 Initial Testing and Examination

The initial component and system fabrication and installation volumetric and surface examinations were performed in accordance with the specification requirements and applicable codes (See Reference 9 for the reactor vessel). These inspections formed the baseline results prior to operation for comparison with results of future examinations for any trends. Any component or system replacement requires the establishment of a new preservice baseline examination for future comparison of results.

5.2.4.2.1 Initial Testing and Examination - Reactor Pressure Vessel

The initial testing and examination of the reactor pressure vessel is addressed in Reference 9. Due to the vessel design and installation, some vertical and horizontal beltline welds were exempted from inservice inspection during the first and second intervals.

5.2.4.2.2 Initial Testing and Examination - Reactor Coolant Pressure Boundary Piping

The measures listed below were taken on all piping and components within the primary coolant boundary (not including the safety and relief valves which are discussed later). For the most part, design, fabrication, inspection, and installation of piping outside the drywell was the same as inside the drywell.

Inspection and testing of the piping were completed according to the following:

A. The circumferential butt welds were radiographed in accordance with Paragraph UW-51 of ASME Section VIII;

B. The castings were radiographed to assure compliance with the requirements set forth in ASTM E-71, or ASTM E-186, or ASTM E-280, for Class II as applicable; and

C. After installation, a hydrostatic field test was performed in accordance with USAS B-31.1.0 to assure the integrity of the installed system.

During the hydrostatic testing of the reactor coolant system, the total flow required to maintain reactor pressure was monitored. This total flow could not exceed the capacity of one control rod hydraulic pump.

In addition, the following measures beyond applicable code requirements were taken:

A. The piping received 100% radiography of all welded joints in plate, pipe, and butt weld fittings with techniques and standards of acceptances complying to ASME Section VIII, Paragraph UW-51. All circumferential butt welds made during shop fabrication or field fabrication were similarly radiographed.

B. Stainless steel pipe was cleaned by shot-blasting using alumina grit. Carbon steel pipe was grit-blasted. Piping was shipped to the plant site with open ends metal capped and taped with silica-gel placed inside the pipe for absorption of moisture to ensure against corrosion. Metal protectors were reinstalled on the open ends of all piping during erection at the end of each working day.

C. Carbon steel piping in sizes 6 inches and larger in Schedule 160, X strong, and XX strong had supplementary tests S-5 and S-6 performed as described in ASTM A106. The check analysis required in the supplementary tests was made for each heat of piping involved and is essentially an etching test to ensure the integrity of material.

D. Stainless steel welding electrodes had the ferrite content controlled by chemistry and checked by measurement with Magna or Severn gauges.

E. The carbon steel material of dissimilar metal welds was clad with E-309 electrode on the root pass and E-308 electrode on subsequent passes to obtain a minimum thickness of 3/8 inches with radiography of the final weld preparation and a liquid penetrant check.

F. 100% radiography was performed on all valve castings in sizes 4 inches and larger for 900-pound class valves. Radiography on lower pressure class valves was performed on the weld ends and at critical casting locations.

G. A liquid penetrant test on all stainless steel socket welds was performed in accordance with ASTM E-165.

H. A seismic analysis was performed on those portions of piping within the containment.

I. Third party inspection was provided for all piping between the vessel and the first isolation valve to assure code compliance.

5.2.4.3 Arrangement and Accessibility

Accessibility and radiation exposure are two of the factors studied on all of the equipment in both units subject to inservice inspection.

In so far as possible, the ISI program complies with the ASME Code Section XI, (as allowed by the NRC), and 10 CFR 50.55a. Due to the early design of these units, certain requirements cannot be met; therefore, relief requests have been submitted to the NRC for evaluation and acceptance.

5.2.4.4 Examination Technique and Procedure

The examination technique, procedure, and the evaluation criteria for ISI are governed by ASME Section XI and the station's ISI program.[5]

5.2.4.5 Inspection Intervals

The ISI program consists of the examination and inspection of Class 1, 2, and 3 components and systems on a 10-year program. The current 10-year interval is from January 20, 2003, through January 19, 2013.

5.2.4.6 Examination Categories and Requirements

The performance of ISI is in accordance with ASME Section XI as required by 10 CFR 50.55a(g).

5.2.4.7 Evaluation of Examination Results

The standards for evaluation of the examination are as required by the ISI program and the requirements of ASME Section XI and include any other requirements as imposed by Generic Letters 88-01 not related to Section XI.

5.2.4.8 System Leakage and Hydrostatic Pressure Tests

System leakage and hydrostatic pressure tests are conducted in accordance with ASME Section XI and the relief requests granted as a part of the ISI program.

5.2.5 Detection of Leakage Through Reactor Coolant Pressure Boundary

In the operation of any power plant, fossil fuel or nuclear, the ability to detect leaks and mitigate possible serious incidents is necessary for safe power plant operation. For a nuclear fuel plant, the detection and location of leakage is important due to the possible consequences to the public. However, there is a major difference between the "detection" of a leak and the "location" of a leak. The ability to detect a very small leak, e.g., in the cubic centimeters per minute range, is of no value unless the source of leakage can be found.

Ideally, frequent visual inspection by operating personnel of the main steam and feedwater lines would provide the means for detection of small leaks. Due to the steam lines being high sources of radiation and the proximity of the feedwater lines to the steam lines, visual inspection is possible only at low reactor power for those lines outside the drywell and with the reactor subcritical for those lines inside the drywell.

With the use of an unmanned containment for both units, remote means of leak location must be employed. However, at some point in the sequence of locating a leak, the visual inspection is necessary. For this visual inspection to be meaningful, the primary system has to be at or near operating conditions of pressure and temperature.

Once a leak has been determined to exist in the primary system within the primary containment, the magnitude of the leakage has to be determined.

If the leakage is within the allowable limit set by Technical Specifications, unit operation can continue unless the leakage is determined to be due to a through-wall RCPB pipe crack.

Since the primary containments for both units are unmanned systems, it is necessary that the operator be provided with remote means for the detection of leakage from the primary system. A number of systems are provided for the purpose of leak detection. Through the use of instrumentation on other operating systems and the systems to be discussed below, it is possible to determine the source and magnitude of the leakage.

The description of the systems contained in this section would be used by the operator to determine that leakage does exist within the drywell. These various systems operating together or singly provide information to the operator that a possible problem has developed within the drywell.

5.2.5.1 Drywell Sumps

The drywell floor drain sump (with a volume of 1000 gallons) and the equipment drain sump (with a volume of 1000 gallons) systems provide a reliable means of determining leakage trends in the drywell. These sumps are periodically pumped and leakage rates are determined and compared. The sump isolation valves are normally closed and are opened manually (after receiving a high-level alarm) prior to pumping either the drywell floor drain sump or the equipment drain sump. The sump pumps then start automatically on high sump levels. Sudden increases in leakage causing a high sump level are alarmed in the control room and are evaluated. The leakage collected in the drywell equipment drain sump is identified leakage and the leakage collected in the drywell floor drain sump is unidentified leakage.

Technical Specifications impose the following limits for reactor coolant leakeage:

1. No Pressure Boundary Leakage

2. ≤ 25 gpm total leakage averaged over the previous 24 hour period

3. ≤ 5 gpm unidentified leakage

4. ≤ 2 gpm increase in unidentified leakage within the previous 24 hour period in Mode 1.

The leakage limits addressed here do not conflict with those addressed in Sections 5.2.5.6.4 and 5.2.5.8.

5.2.5.2 Continuous Air Monitor

Each drywell is equipped with one continuous air monitor (CAM) sampling point which takes an air sample from a selected point within the drywell. The air sample is drawn through the tubing, out through a drywell penetration and auto-isolation valves (Group II), and then to a continuous air monitor. This air monitor will count gross activity which is recorded and alarm on an increase. The alarm provides an indication that a radioactive leak has occurred. A charcoal and particulate sample cartridge is also provided in the CAM. The air sample is returned to the drywell via Group II auto-isolation valves.

5.2.5.3 Thermocouple Leak Detection

Thermocouples are located throughout the drywell. Selected points are provided to indicate, record, and alarm containment temperatures in the control room. Additional drywell temperature information is available to the operators locally at a instrument rack in the reactor building.

The main steam safety and electromatic relief valves are equipped with leak-off lines. Leakage is vented off through a closed piping system. The leakage from each main steam safety valve is routed past its own thermocouple and then to the

drywell equipment drain sump. The leakage from each electromatic relief valve is routed past its thermocouple and then to its discharge line to the torus. The leakage from the Target Rock safety relief valve is monitored by a thermocouple in the valve discharge line to the torus. An increase in temperature on any of the thermocouples will sound an alarm in the control room.

5.2.5.4 Flow and Pressure Switches

Each of the reactor recirculating pumps is equipped with flow switches which will actuate an alarm in the control room on excessive seal leakage.

A pressure switch will alarm if failure of the inner O-ring takes place on the reactor vessel Both the flow switch alarms and the pressure switch alarm are leak location systems.

5.2.5.5 Floor and Equipment Drains

In the case of a steam leak, essentially all of the leak will be routed to the floor drain sump as condensate from the drywell coolers. In the case of a liquid leak, about 60% will leak directly into the floor drain, and 40% will flash to steam and be routed to the floor drain sump as described above for steam leaks. Any significant increase can be detected in a few hours.

5.2.5.6 Location of Leakage in the Drywell

Once a leak is detected within the drywell by any of the methods covered above, it becomes necessary to determine its magnitude and rate of change with time. The smaller the leak, the more difficult it becomes to locate its source. However, through the use of the continuous air monitoring system, it is possible to detect changes in radioactive nuclides from one 24-hour period to the next. Very small leaks are thus possible to detect.

The systems described below would be used to find the source of leakage. The systems are remote in nature and provide a method of cross checking to locate the source of leakage or the area in the drywell in which the leak has developed. Chemical analysis of the reactor building sump contents aids in determining whether the leakage is from the reactor, the reactor building closed cooling water system, or the feedwater system.

5.2.5.6.1 Air Sample Manifold System

There are 24 air sampling points for the drywell and one for the torus which provide a means of taking air samples from specific areas of the drywell. Four of these sample points (three drywell, one torus) have automatic Group II containment isolation valves upstream. The remaining 21 drywell sample points have their inboard manual isolation valves locked closed. One of the three drywell sample points which have automatic containment isolation capability is equipped for a portable air sampler to obtain routine drywell atmosphere samples. A charcoal cartridge and particulate sample cartridge are included in the sampling system. Samples may not be taken from the 21 manual isolation points unless a person is in continuous communication with the control room and in attendance to manually close the isolation valves from the drywell in the event of a Group II isolation condition. If sampling from these points is necessary, only one sample point may be open at a time. Refer to Section 9.3.2.7 for additional system details. The points sampled are as follows:

A. Air return from reactor head area;

B. Airspace around reactor vessel;

C. Area over each recirculation system valve;

D. Drywell cooler outlet;

E. Area of recirculation pump seal (each pump)

F. Area of main steam and feedwater line penetrations;

G. Area under reactor vessel control rods;

H. Openings to control rod area; and

I. Torus sample.

The area between the two reactor vessel head O-rings is initially drained and vented. Then the area is continuously monitored to provide an indication of leakage from the inner O-ring seal.

5.2.5.6.2 Deleted.

5.2.5.6.3 Flow or Pressure Switches

Each of the reactor recirculation system pumps is equipped with flow switches which actuate an alarm in the control room on excessive pump seal leakage. A

pressure switch alarms if failure of the inner O-ring occurs on the reactor vessel. Actuation of these systems will locate the source of leakage.

5.2.5.6.4 Floor and Equipment Drains

The floor drain collects unidentified leakage and the equipment drain collects identified leakage.

Once a primary system leak is suspected, a visual inspection of the primary system is performed at the earliest opportunity. If unidentified leakage exceeds a specified quantity, Technical Specifications govern actions that are required. This requirement is designed to ensure that leaks will be detected before cracks can grow to a critical length.

Identified leakage is composed of the normal seal and valve-packing leakage and does not represent a safety consideration as long as the leakage is small compared to the reactor coolant makeup capacity available. A total leakage to the floor drain and equipment drain sumps (i.e., identified plus unidentified) of 25 gal/min is allowed before plant shutdown is required. This limit is only 0.5% of the capacity of the HPCI system, which is the makeup system available in the event of a loss of normal feedwater. Therefore, an equipment drain tank flow of less than 20 gal/min (25 gal/min total minus 5 gal/min unidentified) does not adversely affect plant safety.

Even though this identified leakage does not represent a safety consideration, in the interest of proper equipment maintenance, an effort is made to identify the exact source of all the identified leakage. Visual inspection may not be of help in this case since all of the leakage would be contained in drain pipes to the equipment drain tank. However, thermocouples located on or near key equipment such as the recirculation pump seals may help in establishing the source of the leakage.

If it is not possible to pinpoint the leakage to a valve or piece of equipment, it is then necessary to find the leak by visual means. Visual inspection to locate the leak requires reducing reactor power and entering the drywell. The reactor should be as near as possible to operating conditions of pressure and temperature. Once personnel are in the drywell, leaks would be located by sound, running water, or blowing steam. In the case where a drywell entry has been made to identify an unidentified source of leakage and this source can be quantified, then this unidentified leak can be classified as identified leakage and could drain to the floor drain system.

If the equipment drain sump leak detection is unavailable, it is possible to monitor total leakage with floor drain sump leakage detection alone. In this case the equipment drain sump will overflow and leakage will be collected in the floor drain sump. Under this scenario, all leakage will be conservatively treated as unidentified leakage, thus subject to the more restrictive unidentified leakage limits in the Technical Specifications, until the equipment drain sump leakage detection can be restored.

If the floor drain sump leak detection is unavailable, it is possible to monitor total leakage with equipment drain sump leakage detection alone. In this case the floor drain sump will overflow and leakage will be collected in the equipment drain sump. Under this scenario, all leakage will be conservatively treated as unidentified leakage, thus subject to the more restrictive unidentified leakage limits in the Technical Specifications, until the floor drain sump leakage detection can be restored.

Piping and equipment insulation have been designed for ease of removal which should aid in finding the source of leakage.

For any leak detection and location system, it is still necessary for a person to verify the location or, in some cases, find the leak.

5.2.5.7 Acoustic Monitors

An acoustic monitor is mounted on each safety, relief, and Target Rock valve in the drywell, 13 in all, on each unit. Leaks from these valves cause vibrations to be picked up by the acoustic monitors and result in sounding an alarm in the control room. Each monitor has its own set of indicating lights in the control room.

5.2.5.8 Leakage Rate Limits

The limiting leakage rates are presented in the Technical Specifications. With irradiated fuel in the reactor and coolant temperature greater than 212°F, the maximum unidentified leakage is less than or equal to 5 gal/min and the total leakage is restricted to less than or equal to 25 gal/min. If either of these leakage rates is exceeded, the operational action to be followed is stated in the Technical Specifications. These identified and unidentified leakages do not conflict with the leakage addressed in Section 5.2.5.1.

5.2.5.9 High/Low Pressure Interface

The core spray system and low pressure coolant injection system are monitored for reactor coolant system leakage into the system by pressure switches located in the pumps discharge lines. These switches activate a high-pressure alarm in the main control room when the line pressure exceeds the alarm setpoint. The shutdown reactor cooling system has pressure indication in the main control room of the pump discharge lines to alert the operators of reactor coolant system leakage. The core spray system and low pressure coolant injection system lines are protected by relief valves which are tested in accordance with ASME Section XI. The Shutdown reactor cooling system lines beyond the double isolation valves are protected by relief valves (tubeside of the heat exchangers) which are tested in accordance with the state of Illinois pressure vessel inspections.

5.2.5.10 Compliance with Regulatory Guide 1.45

The various leak detection systems and capabilities, as described herein, detect RCPB leakage, both identified and unidentified. These sensitive and diverse systems meet the acceptance criteria of Regulatory Guide 1.45.

5.2.6 Detection of Leakage Beyond the Reactor Coolant Pressure Boundary

This section addresses only those portions of the steam and feedwater lines external to the drywell.

The area of concern for the steam lines is between the drywell penetration and the turbine stop valves and for feedwater lines between the drywell penetration and the outlet valve of the D feedwater heaters. This piping of concern is contained in a compartment called the steam tunnel and other portions are located in the turbine building.

Various remote leak detection and leak location systems have been provided so the operator has the necessary information to determine that a leak has developed and its possible source. A backup system is also provided which automatically takes action if a serious leak were to occur.

Three temperature monitoring systems are employed in the steam tunnel. First, there are four thermocouples located in the vicinity of the main steam isolation pilot valves; any one of the four will alarm in the main control room on high temperature. Second, there are four temperature elements in general areas of the steam tunnel. If any one of the temperature elements senses high temperature, an alarm in the main control room is initiated.

Third, as an automatic backup system to handle larger steam and feedwater leaks, a system is employed which will send a trip signal to Group I isolation valves. These valves are the main steam isolation valves, main steam line drain, isolation condenser steam vent line, and recirculation sample line valves. Closure of the main steam isolation valves will scram the reactor when reactor pressure approaches or exceeds the analytical limit of 600 psig.

The system consists of 16 temperature switches (four per steam line) located within the steam tunnel. Four switches are used in each instrumentation subchannel. Two subchannels form one trip channel. The logic is one-out-of-two-taken-twice.

Air sampling is performed by means of a remote leak detection manifold sampling system. Various sample points in the turbine and radwaste buildings are provided for air sampling, many of which are in areas containing steam lines. See Section 9.3.2 for description of process sampling systems.

For both units, the use of various temperature monitoring and air sampling systems provide an effective means for the detection of small leaks for all steam and feedwater piping external to the drywell. Once a leak has been detected, increased surveillance of the affected area would be initiated to monitor the rate of leakage change. With electrical distribution system conditions permitting, a load reduction would be made so that personnel could enter into the area to locate the leak. Once the leak is located, an assessment can be made for the next course of action: repair the leak, isolate the affected section, or shut the unit down if the source of leakage presents a problem to plant safety.

5.2.6.1 Floor Drain Sumps

Floor drain sumps (with a volume of 1000 gallons each) and pumps are provided within the secondary containment (reactor building). Leakage from fluid-carrying systems is detected by an increased frequency of sump pump operation, increased input to the radwaste floor drain collector system (see Section 11.2), or high water level in the sump with ultimate annunciation in the control room. Floor drain sumps and pumps are also provided in the turbine building.

5.2.6.2 Area Radiation Monitoring

Area and ventilation radiation monitors are provided throughout the plant equipment and operating areas. Activity levels are indicated in the control room. These monitors can detect leakage from radioactive sources. Leakage is detected by an increased level of activity beyond normal operating background with ultimate high activity annunciation in the control room. Further details on area radiation monitoring such as monitor location are presented in Section 12.3.4.

5.2.6.3 Area Temperature Monitoring

Area temperature monitors are provided in appropriate areas and equipment spaces of the plant. These monitors will detect leakage from high-temperature, fluid-carrying systems. Temperature indication is provided in the control room. Leakage would be detected by an increase in the normal operating temperature of the area with ultimate high-temperature annunciation in the control room and, in some cases, automatic isolation of the system. Systems provided with automatic isolation on detection of high area temperatures are HPCI, RWCU and the MSIVs.

5.2.6.4 Visual Inspection of Equipment and Operating Areas

Access to equipment spaces to permit normal routine visual inspection is provided to those areas of controlled occupancy, radiation levels permitting, as well as those of continuous occupancy (see Sections 12.1 and 12.5 for more details).

5.2.7 References

1. Electric Power Research Institute, NP-4947-SR, BWR Hydrogen Water Density Guidelines, 1987 Revision, dated December 1988.

2. Electric Power Research Institute, NP-4946-SR, BWR Normal Water Chemistry Guidelines, 1986 Revision, dated September 1988.

3. NRC Generic Letter 89-08, Erosion/Corrosion-Induced Pipe Wall Thinning, May 4, 1989.

4. NRC Information Notice No. 91-18, High Energy Piping Failure Caused by Wall Thinning, March 12, 1991.

6. S. Ranganath and T.L. Chapman, "Inservice Inspection Experience in Boiling Water Reactors," G.E. Nuclear Energy, Nuclear Plant Journal, pp. 77 - 80, November-December 1992.

7. GE-NE-A22-00103-10-01, "Dresden and Quad Cities Extended Power Uprate, Task T0900: Transient Analysis, Revision 0, Class 3, October 2000."

8. Deleted.

9. "Dresden 2 Reactor Pressure Vessel Design Exhibits."

10 "Dresden Station Units 2 and 3 Reactor Vessel Electroslag Weld Report."

11 "Dresden Station Unit 3 Recirculation Pipe Replacement (RPR) Project Completion Report."

Table 5.2-1

SAFETY AND RELIEF VALVE SETPOINTS AND CAPACITY

Relief valves:

A. Capacity (total) = 2.7×10^6 lb/hr

B. Pressure settings:

Relief Valve Number	Setpoint (psig)
203-3B	$\leq$ 1112
203-3C	$\leq$ 1112
203-3D	$\leq$ 1135
203-3E	$\leq$ 1135

Safety valves:

A. Capacity (total) = 5.2×10^6 lb/hr

B. Pressure settings:

Number of Safety Valves	Setpoint (psig)	Capacity (lb/hr)
2	1240	644,501
2	1250	649,638
4	1260	654,774

Safety relief valve (Target Rock):

A. Capacity = 6.22×10^5 lb/hr at 1125 psig

B. Setpoint as relief valve = $\leq$ 1135 psig

C. Setpoint as safety valve = 1135 psig

Table 5.2-2

TYPICAL REACTOR COOLANT PRESSURE BOUNDARY
MATERIAL SPECIFICATIONS

Reactor vessel	A 302 B Modified (Code Case 1335)
Reactor vessel closure head studs (6-inch diameter, 65-inch length)	SA 320 Gr L43 (Code Case 1335) (Material similar to 4340)
Reactor vessel bottom head	SA 302 B Modified (Code Case 1335)
Control rod housing material penetrating bottom head	SA 376 Type 304 or SA 312 Type 304
Stub material welded to reactor vessel and to housing	SB 167 Inconel 600 or SB 166
Weld filler metal	
Shop weld	ASTM B-295 (ENiCrFe-3 Group F-45)
Field weld	Inconel 182 or Inconel 82
Main steam	
Piping	A 106 Gr B
Fittings	A 105
Feedwater piping	A 106 Gr B
HPCI	
Piping	A 106 Gr B
Fittings	A 105
Pumps	A 216 Gr WCB
LPCI	
Heat exchanger shell	A 212 Gr B
Pumps	A 216 Gr WCB
Core spray pumps	A 216 Gr WCB
Recirculation pumps	AISI Type 304 and 316 stainless steel

Notes;

1. For piping 2" and under, ASTM A335 Grade P11 or P22 may be substituted for ASTM A106 Grade B material for the same schedule. For fittings and valves 2" and under, ASTM A182 Grade F11 or F22 may be substituted for ASTM A105 for the same rating. Substitutions are allowed up to a maximum temperature of 450°F (operating or design) and apply to non-safety related piping and fittings only. No generic substitution of safety related piping/fittings is allowed.

Table 5.2-3

FURNACE-SENSITIZED STAINLESS STEEL ORIGINALLY IN UNIT 2 AND 3 VESSELS

Description	Quantity per Unit	Type	Vendor[1]
Safe End – 2-in. Instrument Nozzle	4	ASME SA-336, CL-F8	1
Safe End – Jet Pump Instrument Nozzle	2	ASME SA-336, CL-F8	2
Safe End – Recirculation Outlet Nozzle	2	ASME SA-376, TP-316	3
Safe End – Recirculation Inlet Nozzle	10	ASME SA-376, TP-316	3
Safe End – Isolation Condenser Nozzle	2	ASME SA-376, TP-316	3
Safe End – Core Spray Nozzle	2	ASME SA-376, TP-316	3
Safe End – Core Differential Pressure Nozzle	1	ASME SA-336, CL-F8	1
Safe End – CRD Hydraulic Return Line Nozzle	1	ASME SA-336, CL-F8	1
Steam Dryer Support Bracket	4	ASME SA-182, GRF-304	2
Core Spray Bracket	8	ASTM A-276, TP-304	4
Steam Dryer Guide Bracket, upper	2	ASME SA-182, GRF-304	2
Steam Dryer Guide Bracket, lower	2	ASME SA-182, GRF-304	2
Feedwater Sparger Bracket	8	ASME SA-182, GRF-304	2
Flange, Vent Nozzle (top head)	1	ASME SA-182, GRF-304	5
Flange, 6-in. Instrument Nozzle (top head)	2	ASME SA-182, GRF-304	5
Safe End, Vent Nozzle (top head)	1	ASME SA-336, CL-F8	6

Table 5.2-3 (Continued)

FURNACE-SENSITIZED STAINLESS STEEL ORIGINALLY IN UNIT 2 AND 3 VESSELS

Description	Quantity per Unit	Type	Vendor[1]
Safe End, 6-in. Instrument Nozzle (top head)	2	ASME SA-336, CL-F8	6
Specimen Holder Bracket		ASME SA-240, TP-304	4
Specimen Holder Bracket		ASME SA-240, TP-304	4
Specimen Holder Bracket		ASME SA-240, TP-304	4
Internal Cladding[2]		ASTM A-371, ER-308	

Notes:

1. 1 McInnes Steel 4 Allegheny Ludlum
   2 Davidson 5 Alloy Flange & Fitting
   3 B & W 6 Cann & Saule
2. Applied by the sumerged arc process using Arcosite S-4 flux.

Table 5.2-4

FURNACE-SENSITIZED STAINLESS STEEL SAFE ENDS
REPLACED ON UNIT 2 VESSEL

Safe end – 2-inch instrument nozzle
Safe end – Isolation condenser nozzle
Safe end – Core spray nozzle
Safe end – Core dP nozzle
Safe end – CRD hydraulic return nozzle
Safe end and flange – Vent nozzle
Safe end and flange – 6-inch instrument nozzle (top head)

Table 5.2-5

FURNACE SENSITIZED STAINLESS STEEL REMAINING IN UNIT 2 VESSEL

Description	Quantity per Unit	Type	Vendor[1]
Safe End – Jet Pump Instrument Nozzle	2	ASME SA-336, CL-F8	1
Safe End – Recirculation Out Nozzle	2	ASME SA-376, TP-316	2
Safe End – Recirculation Inlet Nozzle	10	ASME SA-376, TP-316	2
Steam Dryer Support Bracket	4	ASME SA-182, GRF-304	1
Core Spray Bracket	8	ASTM A-276, TP-304	3
Steam Dryer Guide Bracket	2	ASME SA-182, GRF-304	1
Steam Dryer Guide Bracket	2	ASME SA-182, GRF-304	1
Feedwater Sparger Bracket	8	ASME SA-182, GRF-304	1
Specimen Holder Bracket		ASME SA-240, TP-304	3
Specimen Holder Bracket		ASME SA-240, TP-304	3
Specimen Holder Bracket		ASME SA-240, TP-304	3
Internal Cladding[2]		ASTM A-371, ER-308	

Notes:

1. 1 Davidson
   2 B & W
   3 Allegheny Ludlum

2. Applied by the submerged arc process using Arcosite S-4 flux.

Table 5.2-6

MODIFICATION PROGRAM FOR UNIT 3 VESSEL PRIOR TO OPERATION

				As-Furnished Conditions			Modification	
					Furnace Sensitized			
Nozzle	Size	Quanity	Safe End Material	Nozzle Attachment Weld	Safe End	Attachment Weld	Safe End	Nozzle Attachment Weld
Recirculation Inlet	12 in.	10	ASME SA 376 Type 316	308 weld	Yes	Yes	Replace	Overlay on i.d.
Recirculation Outlet	28 in.	2	ASME SA 376 Type 316	308 weld	Yes	Yes	Overlay on i.d.	Overlay on i.d.
Steam Outlet for Isolation Condenser and HPCI	14 in.	2	ASME SA 376 Type 316	308 weld	Yes	Yes	Overlay on i.d.	Overlay on i.d.
Core Spray	10 in.	2	ASME SA 376 Type 316	308 weld	Yes	Yes	Replace	Overlay on i.d.
Jet Pump Instrument	4 in.	2	ASME SA 336 CLF 8	308 weld	Yes	Yes	Replace	Overlay on i.d.
CRD Return Line	3 in.	1	ASME SA 336 CLF 8	308 weld	Yes	Yes	Replace	Overlay on i.d..and replace support on vessel i.d.
Instrument	2 in.	4	ASME SA 336 CLF 8	Inconel	Yes	Yes	Replace	Replace (weld to Inconel nozzle)
Core Differential Pressure	2 in.	1	ASME SA 336 CLF 8	308 weld	Yes	Yes	Replace	Overlay on i.d. and replace weld socket on vessel

Table 5.2-6 (Continued)

MODIFICATION PROGRAM FOR UNIT 3 VESSEL PRIOR TO OPERATION

				As-Furnished Conditions			Modification	
					Furnace Sensitized			
Nozzle	Size	Quanity	Safe End Material	Nozzle Attachment Weld	Safe End	Attachment Weld	Safe End	Nozzle Attachment Weld
Head Vent	4 in.	1	ASME SA 336 CLF 8 (Flange ASME SA 182-304)	308 weld	Yes (flange yes)	Yes	Replace safe end and flange	Overlay on i.d.
Head Instrument	6 in.	2	ASME SA 336 CLF 8 (Flange ASME SA 82-304)	308 weld	Yes (flange yes)	Yes	Replace safe end and flange	Overlay on i.d.

Table 5.2-6 (Continued)

MODIFICATION PROGRAM FOR UNIT 3 VESSEL PRIOR TO OPERATION

				As-Furnished Condition		Modification	
				Furnace Sensitized			
Bracket	Quantity	Bracket Material	Pad Material	Bracket	Pad	Bracket	Pad
Jet Pump Riser	20	Type 304	308 clad	No-field install	Yes	-	Overlay pad area around bracket
Lower Surveillance Specimen Holder	6	ASME SA 182 F-304	308 clad	Yes	Yes	Replace	Overlay pad area
Upper Surveillance Specimen Holder	6	ASME SA 182 F-304	308 clad	No	Yes	None	Overlay pad area
Core Spray Sparger	8	ASME SA 182 F-304	308 clad	No	Yes	None	Overlay pad area
Feedwater Sprager	8	ASME SA 182 F-304	308 clad	No	Yes	None	Overlay pad area
Lower Steam Dryer Guide	2	ASME SA 182 F-304	308 clad	No	Yes	None	Overlay pad area
Upper Steam Dryer Guide	2	ASME SA 182 F-304	308 clad	Yes	No	Replace	Overlay pad area
Shroud Head Guide	2	Type 304	308 clad	No-field	Yes	-	Overlay pad area
Steam Dryer Support	4	ASME SA 182 F-304	308 clad	No	Yes	None	Overlay pad area

Table 5.2-7

RECIRCULATION PIPE REPLACEMENT FOR UNIT 3

Nozzle	Size (in.)	Quantity	Safe End Material	Nozzle Attachment Weld	Safe End	Furnace Sensitized Attachment Weld	Safe End
Recirculation inlet	12	10	ASME SA 376 Type 316	308 weld	Yes	Yes	Replaced with Type 316-NG stainless steel, passivated and electropolished
Recirculation outlet	28	2	ASME SA 376 Type 316	308 weld	Yes	Yes	Same as above
Core spray	10	2	ASME SA 376 Type 316	308 weld	Yes	Yes	Same as above
Jet pump instrument	4	2	ASME SA 336 CLF 8	308 weld	Yes	Yes	Same as above
Control rod drive return line	3	1	ASME SA 336 CLF 8	308 weld	Yes	Yes	Same as above

Table 5.2-8

TYPICAL WATER REQUIREMENTS FOR THE CONTAMINATED CONDENSATE STORAGE TANKS

Parameter	Limits
pH	5.6 to 8.6
Conductivity	<1.0 μmho/cm
Silicon dioxide (SiO_{2})	≤100 ppb
Chloride (Cl^-)	≤20 ppb
Radioactivity	≤8.0 x 10^{-4} μCi/cc
Turbidity	≤10 nephelometric turbidity units (NTU) (1, 2)
Sulfate	≤20 ppb
Total organic carbon (TOC)	≤0.40 ppm

Notes:

1. If the NTU is 10 or less and all other chemistry criteria are met, the water is acceptable for storage.

2. If the NTU is greater than 10, the tank should be reprocessed. The water will not be returned to storage without prior specific approval from the shift engineer, after consulting with a chemist.

TABLE 5.2-9

REACTOR COOLANT SYSTEM CHEMISTRY LIMITS

OPERATIONAL MODE(s)	Chlorides	Conductivity (μmhos/cm @25°C)	pH
1	≤ 0.2 ppm	≤ 1.0	5.6 ≤ pH ≤ 8.6
2 and 3	≤ 0.1 ppm	≤ 2.0 **	5.6 ≤ pH ≤ 8.6***

** During Noble Metal Chemical Addition the limit for conductivity is ≤ 20.0 μmhos/cm @25°C.

*** During Noble Metal Chemical Addition the limits for pH are 4.3 ≤ pH ≤ 9.9.

5.3 REACTOR VESSELS

This section presents pertinent data on the reactor vessels. Unless otherwise noted, the information applies to both vessels.

The reactor vessel is a vertical cylindrical pressure vessel as shown in Figures 5.3-1 and 5.3-2.

The control rod drive housings and the incore instrumentation housings are welded to the bottom head of the reactor vessel.

The reactor vessel is supported by a steel skirt. The top of the skirt is welded to the bottom head of the vessel. The base of the skirt is continuously supported by a ring girder fastened to a concrete foundation, which carries the load through the drywell to the reactor building foundation slab (see Figure 6.2-1).

The reactor vessel head is flanged to the vessel and sealed with two concentric O-rings. The steam outlet lines are from the vessel body, below the reactor vessel flange.

The structural integrity of the reactor system is maintained at the level required by the ASME Section XI. The Systematic Evaluation Program (SEP) Topic V-6 reviewed aspects such as fracture toughness, surveillance programs, and neutron irradiation against ASME Section III, 1977 Edition including addenda through Summer 1978; 10 CFR 50, Appendices G and H; and Regulatory Guide 1.99-implemented 10 CFR 50.55a(g) requirements to assure reactor vessel integrity.

5.3.1 Reactor Vessel Materials

The reactor pressure vessel (RPV) materials and fabrication methods conform to ASME Section III, Class A, 1963 Edition including Summer 1964 Addenda and including code case interpretations pertaining to primary nuclear reactor vessels applicable on the date of the purchase contract (see Reference 15). Inservice inspection (ISI) techniques conform to ASME Section XI with approved exceptions as noted in Section 5.2.4.

5.3.1.1 Reactor Vessel Materials Specification

The reactor vessel material supplied was ASME SA-302 Grade B, modified in accordance with ASME Code Case 1339, Paragraph 1. The nozzles and other attachments are as specified in the purchase specification in Reference 15.

5.3.1.2 Special Processes Used for Manufacturing and Fabrication

The longitudinal weld joints were accomplished using the electroslag welding process. Details of this fabrication method are contained in Reference 16. Other welding processes, as applicable, were used in the fabrication of the reactor vessels.

Such processes as forging, extruding, and casting were applied to the fabrication of items used in the assembly of the reactor vessels.

5.3.1.3 Special Methods for Nondestructive Examination

The reactor vessel plate was 100% ultrasonically examined before fabrication of the vessel but after forming and heat treatment. The plate areas where attachments are welded were ultrasonically inspected prior to joining the attachments.

The closure studs, nuts, bushings, and washers were ultrasonically inspected. Longitudinal and shear wave techniques were used. The longitudinal wave examination was performed on 100% of the stud cylindrical surface and from both ends of each stud.

Liquid penetrant examinations and magnetic particle examinations were utilized on the forgings and on the cladding and flange sealing surfaces. The cladding was ultrasonically inspected per the General Electric specification.

All full penetration welds on the vessels received 100% radiographic examination. Either magnetic particle or liquid penetrant examination was performed on the final pass of structural welds.

5.3.1.4 Special Controls for Ferritic and Austenitic Stainless Steels

Regulatory Guides, as such, did not exist at the time when these reactor vessels were fabricated. Information related to specific Regulatory Guides (as requested in Regulatory Guide 1.70, Revision 3) is provided below to correlate actual past practice with current requirements. Unless otherwise stated, there has been no commitment to the Regulatory Guides.

5.3.1.4.1 Regulatory Guide 1.31

Application of Regulatory Guide 1.31 was not a consideration in fabrication of the reactor vessels. The stainless steel cladding is ER-308L weld deposit using arcosite S-4 flux with the submerged arc welding process.

5.3.1.4.2 Regulatory Guide 1.34

Electroslag welding of longitudinal seams was performed in accordance with ASME Section III, Class A and Code Case 1355 as discussed in Reference 16.

5.3.1.4.3 Regulatory Guide 1.43

Control of undercladding cracking was achieved by use of a base material, chosen for its fine grain properties, which was not susceptible to the undercladding cracking observed on other materials with a coarse grain structure.

5.3.1.4.4 Regulatory Guide 1.44

Control of sensitized stainless steel usage was not considered in the fabrication of these vessels. As a result of several incidents elsewhere, the Unit 3 vessel underwent major modification and/or replacement of nozzle safe ends prior to installation and entering service. These modifications are addressed further in Sections 5.2.3.4 and 5.2.3.5. The Unit 3 safe end to the vessel nozzle weld received a weld overlay on the internal surface for the two recirculation outlet nozzles and the two steam outlet nozzles for the isolation condenser and high pressure coolant injection system.

5.3.1.4.5 Regulatory Guide 1.50

Preheat temperatures used when welding low-allow steel components (shell plates, flanges, nozzles) met applicable requirements or had contract variations approved by General Electric, the vendor responsible for supplying the reactor vessels.

5.3.1.4.6 Regulatory Guide 1.71

Welders were qualified as required by ASME Section III, Class A, and ASME Section IX. Any special requirements per the General Electric specification were also used in qualifying the welders and welding procedures.

5.3.1.4.7 Regulatory Guide 1.99

Regulatory Guide 1.99 states the regulatory position and discusses the methods used by the NRC staff in evaluating all predictions of radiation embrittlement of the reactor vessel beltline materials for implementation of 10 CFR 50, Appendices G and H. Section 5.3.2 addresses further compliance with the methodology in Regulatory Guide 1.99, Revision 2.

5.3.1.4.8 Regulatory Guide 1.190

Regulatory Guide (RG) 1.190 provides state of the art calculation and measurement procedures that are acceptable to the NRC for determining Reactor Pressure Vessel (RPV) neutron fluence. RPV fluence has been evaluated using a method in accordance with the recommendations of RG 1.190. Future evaluations of RPV fluence will be completed using a method in accordance with the recommendation of RG 1.190 (as noted in Reference 15).

5.3.1.5 Fracture Toughness

These reactor vessels were designed before specific rules for brittle fracture control in nuclear components were developed and before the material fracture properties in pressurized systems, other than the reactor vessel, were generally measured or

controlled. The applicable industry codes and standards for the station, at that time, did not contain these rules for brittle fracture.

A report describing the ductile yielding analysis of the reactor vessel, including a discussion of the assumptions, methods of analysis, and conclusions, has been prepared. The report also addresses thermal shock and brittle fracture.[1]

A comprehensive tabulation of fracture toughness results on the reactor vessel plate material and welds is contained in Reference 15. Details of the qualification results for the electroslag welds are given in Reference 16. Section 5.3.2 presents additional details on the provisions for fracture toughness evaluations during the operating life of the reactor vessels. Section 5.3.1.6 addresses the reactor vessel material surveillance program.

5.3.1.6 Material Surveillance

Vessel material surveillance samples are located within the reactor vessel to enable periodic monitoring of material properties with exposure. The program includes specimens of the base metal, weld metal, and heat-affected zone metal. These specimens receive higher neutron fluxes than the vessel wall ¼ T location and, therefore, lead it in integrated neutron flux. About 400 samples were initially inserted in the vessel; samples are periodically removed for Charpy V-notch and tensile strength tests.

The reactor vessel is a primary barrier against the release of fission products to the environment. In order to provide assurance that this barrier is maintained with a high degree of integrity, a materials surveillance program was developed and initiated at the beginning of nuclear operation of the reactors. This surveillance program was designed to be in conformance with the requirements of ASTM E185-62 with one exception. The base metal specimens of the vessels were made with their longitudinal axes parallel to the principal rolling direction of the vessel plate. Two material specimens were removed and tested under this original program.

In 2003, the NRC approved Dresden's participation in the BWR Vessel and Internals Project (BWRVIP) Integrated Surveillance Program (ISP) as described in BWRVIP-78 and BWRVIP-86 (Reference 14). The NRC approved the ISP for the industry in Reference 14 and approved Dresden's participation in Reference 15. The ISP meets the requirements of 10 CFR 50 Appendix H and provides several advantages over the original program. The surveillance materials in many plant-specific programs do not represent the best match with the limiting vessel beltline materials since some were established prior to 10 CFR 50 Appendix H requirements. Also, the ISP allows for better comparison to unirradiated material data to determine actual shifts in toughness. Finally, for many plants, ISP data will be available sooner to factor into plant operations since there are more sources of data.

The withdrawal schedules for both units are shown in Table 5.3-1. The original withdrawal schedule was based on the three capsule surveillance programs as defined in Section 11.C.3.a of 10 CFR 50, Appendix H. The accelerated capsule (near core top guide) is not required by Appendix H but was tested to provide additional information on the vessel material. The results of the tests and examinations of these samples are used to generate the information addressed in Section 5.3.2. The current withdrawal schedule for both units is based on the NRC approved revision of BWRVIP-86 (Reference 14). Any changes to the withdrawal schedule must be approved by the NRC. All capsules placed in storage mst be retained for future insertion.

In the SEP Topic V-6, reactor vessel integrity was evaluated and the material surveillance program was found acceptable.

5.3.1.7 Reactor Vessel Fasteners

The reactor vessel head closure studs are 6 inches in outside diameter and approximately 65 inches long with a 1.0-inch diameter bore hole. There are 92 closure studs for each reactor vessel. The stud material is specified as ASTM A 320 Grade L43 (ASME Code Case 1335, Paragraph 4, was also applied) which is a quench and tempered low-alloy steel that is similar to AISI Grade 4340.[2]

General Electric performed an ASME Section III, Appendix E, code margin assessment for these units. For the vessel design pressure, the minimum calculated number of studs is 79, whereas, the actual number is 92. Therefore, there is a significant margin.[3]

5.3.1.8 Reactor Vessel Nozzle Safe Ends

The safe ends originally ordered for the vessel were Type 304 and 316 stainless steel with 0.08% maximum carbon. These stainless steel safe ends were furnace-sensitized as a result of the furnace heat treatment of the reactor vessel. The circumferential welds in the Type 304 stainless steel pipe were not solution heat treated.

A list of stainless steel materials in the Unit 2 vessel (and attachments) which were subjected to heat treatment for stress relief is given in Table 5.2-3. A list of items which have not subsequently been replaced is given in Table 5.2-5. The safe ends which have been replaced are given in Table 5.2-4. Most of the safe ends on Unit 3 and internal attachments were modified as described in Section 5.2.3 and as stated in Tables 5.2-6 and 5.2-7.

Intergranular stress corrosion cracking (IGSCC) can occur when a special combination of materials, environment, and stress exist. If any of these conditions is not present, IGSCC will not occur. The susceptibility of austenitic stainless steels to IGSCC is high for furnace-sensitized, cold-worked material, and weld-sensitized material. Solution-annealed material, high-ferrite weld metal, or castings are low in susceptibility.[4]

After reports were received of cracking in furnace-sensitized 300-series stainless steel safe ends on the nozzles of the Elk River and LaCrosse units, it was decided that, to the extent possible, considering time and material limitations, the furnace-sensitized safe ends on the Unit 3 vessel should be replaced (see Table 5.2-6 for initial modifications). Only four safe ends were not replaced: the two 28-inch diameter recirculation outlet nozzles and the two 14-inch diameter steam outlet nozzles for the isolation condenser and the high pressure coolant injection (HPCI) systems. The safe ends were examined carefully and no evidence of intergranular attack was found. Additionally, the internal surfaces of the safe ends were clad with Type 308 stainless steel laid down as axial stringer beads after the piping was welded on. Table 5.2-6 provides the details of the changes that were made.

In making these changes on Unit 3, the area of sensitized metal exposed to the hostile environments was only reduced, not eliminated, since the base metal in the heat-affected zones adjacent to the welds was sensitized. Subsequently, some of

these safe ends and welds have been replaced (see Tables 5.2-6 and 5.2-7). The inservice inspection program is in accordance with ASME Section XI and includes the additional requirements of Generic Letter 88-01 (see Section 5.2.4) and BWR Vessel and Internals Project, Technical Basis for Revisions to Generic Letter 88-01 Inspection Schedules (BWRVIP-75).

Experience indicates that in the event of IGSCC, detectable leakage will occur before the crack grows to a critical size. Leaks can be detected by noting an increase in flow from the drywell equipment drain or floor drain sumps, high-temperature indication in some equipment drain lines, or unusual radioactivity buildup in filters and charcoal canisters in the drywell air sampling manifold system which are routinely monitored for increases in radioactivity. These particulate filters and charcoal canisters are taken daily through one of the three drywell sample lines with automatic isolation valves.

The reactor vessels are designed and fabricated in accordance with ASME Section III. Paragraph N151 of ASME Section III defines the boundary between the vessel and the piping as the first circumferential joint, exclusive of the connecting weld in welded connections. This means that the nozzles are part of the vessel and they must be designed, manufactured, and attached in the vessel wall in accordance with ASME Section III; however, the safe ends and the welds attaching them to the nozzle are not a part of the vessel but a part of the piping system.

The Illinois Board of Boiler Rules recognized that, at the time the Dresden units were purchased, there was no code for nuclear piping applicable in their jurisdiction. Therefore, the board required that the piping attached to the vessel and extending out to and including the first shutoff valve should be designed, fabricated, and installed in accordance with ASME Section I, as well as USAS B31.1. The board also required that the hydrostatic test pressure should be 125% of design pressure for the system comprising the boiler rather than the 150% specified in ASME Section I.

The furnace-sensitized safe ends were carefully removed from the Unit 3 vessel nozzles and the new safe ends were welded to the nozzles using welders and procedures qualified in accordance with ASME Section IX. The Illinois Board of Boiler Rules had agreed that since no nuclear piping code was available to their jurisdiction, stamping would not be required. Instead, the board decided that modified P4A forms or letter certificates of compliance signed by a qualified inspector would be acceptable evidence that the piping contained approved materials, that it had been installed by an ASME Code qualified contractor using qualified welders working in accordance with a qualified procedure, and that the work had been inspected by a qualified inspector.

Since inservice inspections on Unit 3 revealed indications of IGSCC, piping replacement was performed. IGSCC-susceptible piping and the associated safe ends were replaced during the 1985-86 recirculation pipe replacement (RPR) outage (Reference 17 and Table 5.2-6). The material employed was Type 316 Nuclear Grade stainless steel whose chemical properties provide more resistance to weld sensitization than the old material. Solution heat treatment was performed on all shop welds (completed at Mannesmann Manufacturing located in Germany), and mechanical stress improvement (MSIP) was performed on a number of core spray and isolation condenser system welds (not replaced during the outage). Table 5.2-6 provides the details of those safe ends replaced.

Some safe ends have been replaced on Unit 2. These were not replaced prior to unit operation, as on Unit 3; rather, the Unit 2 safe ends were replaced during subsequent outages. A list of material in the Unit 2 vessel which was originally furnace-sensitized stainless steel (see Table 5.2-3) but which has not been replaced is given in Table 5.2-5. The Unit 2 safe ends which have been replaced are given in Table 5.2-4.

The core spray piping out to the second isolation valve, the core spray nozzle safe ends, and the core spray thermal sleeves were replaced (see further the discussion in Section 5.2.3).

Feedwater nozzle cladding cracks were observed during vessel nozzle inspections. The observed cracks were caused by thermal cycling which occurred in the annulus between the nozzle and sparger thermal sleeve. The stainless steel cladding flaws were ground out and interference fit thermal sleeves were installed. The final modification to the feedwater nozzle sparger thermal sleeves resulted in the removal of the stainless steel cladding from the feedwater nozzle and installation of the dual-seal, triple-sleeve sparger configuration supplied by General Electric and recommended by NUREG-0619.

Routine inspections of the feedwater nozzles and spargers are performed in accordance with Table 2 of the NRC SER (TAC M94090) of the BWR Owners Group proposed alternate inspections to NUREG-0619 (General Electric report GE-NE-523-A71-0594).

5.3.2 Pressure-Temperature Limits

The design temperature for various system components varies according to the specific operating condition. The design temperature for the reactor vessel is based on the saturation temperature corresponding to the design pressure. Therefore, no specific system temperatures are designated as safety or operating limits.

Neutron radiation exposure above 10^{17} n/cm^2 (greater than 1 MeV) begins to affect the mechanical properties of ferritic steel. The most important consideration is that of the change in the temperature below which ferritic steel breaks in a brittle rather than a ductile mode (referred to as the NDT temperature). The NDT temperature increases with increasing neutron exposure. ASME Section III, N-446 specifies that, for neutron irradiated areas of the vessel, there should be no nozzle or other structural discontinuities. The design conditions for determination of the NDT temperature is specified in ASME Section III, N-330. Extensive tests have established the magnitude of changes in the NDT temperature as a function of the integrated neutron dosage.

The present pressure temperature operating curves shown in Figure 5.3-3 through 5.3-7 are calculated using the methodology and data from Regulatory Guide 1.99, Revision 2.

5.3.2.1 Limit Curves

The reactor is a primary barrier against the release of fission products to the environment. In order to provide assurance that this barrier is maintained at a high degree of integrity, pressure and temperature limits have been established for the operating conditions to which the reactor vessel may be subjected. Figure 5.3-3 through 5.3-7 presents the pressure-versus-temperature curves for the operating conditions: Pressure testing (5.3-3 through 5.3-5), nonnuclear heatup and cooldown (5.3-6), and core critical operation (5.3-7). These curves have been established to be in conformance with 10 CFR 50, Appendix G, and Regulatory Guide 1.99, Revision 2. The curves take into account the change in the reference nil-ductility transition temperature (RT_{NDT}) as a result of neutron embrittlement. The adjusted reference temperature (ART) of the limiting vessel material is used to account for irradiation effects.[5]

5.3.2.1.1 Beltline, Nonbeltline, Closure Flange Regions, and Bottom Head regions

Four vessel regions are considered for the development of the pressure and temperature curves: the core beltline region, the nonbeltline region (other than the closure flange region and the bottom head region), the closure flange region, and the bottom head region. The beltline region is defined as that region of the reactor vessel that directly surrounds the effective height of the reactor core (between the bottom and top of active fuel) and is subject to a RT_{NDT} adjustment to account for irradiation embrittlement. The nonbeltline, closure flange regions, and bottom head region receive insufficient fluence to necessitate a RT_{NDT} adjustment. These regions contain components which include: the reactor vessel nozzles, closure flanges, top and bottom head plates, control rod drive penetrations, and shell plates that do not directly surround the reactor core. The closure flange region, and bottom head region, although not a nonbeltline regions, are treated separately from the nonbeltline region for the development of the pressure-temperature curves to address 10 CFR 50, Appendix G requirements.

5.3.2.1.1.1 Boltup Temperature

The limiting initial RT_{NDT} of the main closure flanges, the shell and head materials connecting to these flanges, connecting welds and the vertical electroslag welds which terminate immediately below the vessel flange is 23°F. Therefore, the minimum allowable boltup temperature is established as 83°F (RT_{NDT} + 60°F) which includes a 60°F conservatism required by the original ASME Code.

5.3.2.1.1.2 Figures 5.3-3 through 5.3-5 - Pressure Testing

As indicated in figures 5.3-3 through 5.3-5 for pressure testing, the minimum metal temperature of the rector vessel shell is 83°F for reactor pressures less than 312 psig. This 83°F minimum boltup temperature is based on a RT_{NDT} of 23°F for the electroslag weld immediately below the vessel flange and a 60°F conservatism required by the original ASME Code. The bottom head region limit is established as 68 °F based on moderator temperature assumptions for shutdown margin analysis.

At reactor pressures greater than 312 psig, the minimum vessel metal temperature is established as 113°F. The 113°F minimum temperature is based on a closure flange region RT_{NDT} of 40°F and 90°F conservatism required by 10 CFR 50, Appendix G.

5.3.2.1.1.3 Figure 5.3-6 - Nonnuclear Heatup and Cooldown

Figure 5.3-6 applies during heatups with nonnuclear heat (e.g., recirculation pump heat) and during cooldowns when the reactor is not critical (e.g., following a scram). The curve provides the minimum reactor vessel metal temperatures based on the most limiting vessel stress.

5.3.2.1.1.4 Figure 5.3-7 - Core Critical Operation

The core critical operation curve shown in Figure 5.3-7, is generated in accordance with 10 CFR 50, Appendix G which requires core critical pressure and temperature limits to be 40°F above any Pressure Testing or Non Nuclear Heatup/Cooldown limits. Since Figure 5.3-6 is more limiting, Figure 5.3-7 is equal to Figure 5.3-6 plus 40°F.

5.3.2.1.2 Procedure for Updating Limit Curves

When credible surveillance data from the reactor vessel are not available, calculation of the neutron radiation embrittlement of the beltline materials should be based on the requirements outlined in Regulatory Guide 1.99.[6] When two or

more credible surveillance data sets are available for the reactor vessel, they may be used to determine the ART and the Charpy upper shelf energy for the beltline materials. The application of the methods described in Regulatory Guide 1.99[6] and used in the General Electric report[5] must also consider the chemistry factor as applied in the Regulatory Guide. In such applications the controlling factor for the pressure-versus-temperature curves may not be the beltline materials, as is evidenced for Dresden where the electroslag weld metal below the closure flange was found to be the controlling point.

5.3.2.2 Operating Procedures

Reactor operating procedures are utilized to implement the operating criteria and limitations specified in the Technical Specifications. The heatup and cooldown rates and pressure changes are coordinated so as to remain within the specified limitations. The water chemistry control and hydrogen addition are implemented in accordance with operating procedures specific for each unit.

5.3.3 Reactor Vessel Integrity

The structural integrity of the primary system boundary shall be maintained at the level required by ASME Section XI.

The Babcock and Wilcox Company (B&W) designed and fabricated the reactor vessels purchased by GE, who supplied the vessels to CECo for the Dresden Station. The Hartford Company had the responsibility for third party inspection at B&W and signed both the data reports and the ASME Code N-1A forms (Reference 15).

This section and the following subsections summarize the reactor vessel's purpose and the factors that contribute to its integrity.

5.3.3.1 Design

5.3.3.1.1 General Parameters

The performance objectives of the reactor vessel are to contain the reactor core, the reactor internals, and the reactor core coolant-moderator and to serve as a high-integrity barrier against leakage of radioactive materials to the drywell. To achieve these objectives, the reactor vessel was designed using the following bases:

A.	Design pressure	1250 psig
B.	Base metal	ASME SA-302 Grade B, Modified (Code Case 1339)
C.	Cladding material	Weld deposited E-308 electrode
D.	Design code	ASME Section III-A

The nominal operating pressure of 1005 psig has been chosen on the basis of economic analyses for boiling water reactors. The reactor vessel design pressure of 1250 psig was determined by an analysis of margins required to provide a reasonable range for maneuvering during operation (with additional allowances to accommodate transients above the operating pressure without causing actuation of the safety valves).

The strength required to withstand external and internal loadings, while maintaining a high degree of corrosion resistance, dictated the use of a high-strength carbon alloy steel, SA-302 Grade B, Modified (Code Case 1339) with an internal cladding of Type 308 stainless steel applied by weld overlay.

The reactor vessel was designed for a 40-year life. It will not be exposed to more than 10^{19} n/cm^2 of neutrons with energies exceeding 1 MeV.

The ASME Section III, Class A design criteria provides assurance that a vessel designed, built, and operated within its design limits has an extremely low probability of failure due to any known failure mechanism.

The reactor vessel was designed and built in accordance with ASME Section III, Class A. General Electric specified additional requirements. Records of material properties were developed and retained for later evaluation of the reactor vessel during all operating conditions.

5.3.3.1.2 Specific Criteria

The design stress (general membrane) permitted by ASME Section III (1965) for design purposes is the lesser of one-third of the minimum ultimate strength (S_{ult}) or two-thirds of the minimum yield strength (S_y). For the pressure vessel material, SA 302 Grade B, Modified (Code Case 1339), at a temperature of 550°F, the design stress is found to be ⅓ S_{ult} or ⅓ x 80,000 psi = 26,700 psi. Therefore, the maximum allowable pressure stress that can be tolerated without failure is estimated to be 80,000 psi (i.e., the ultimate strength of the material).

A vessel stress report was prepared by B&W. An independent review of this report was conducted by GE as each section was received, and a certified report was issued upon completion of the analysis.

Bell-mouthing of the reactor vessel is applicable only to vessels with breech closure, or a closure made by screwing the reactor vessel head into the reactor vessel. Since the reactor vessel head is flanged to the vessel bell-mouthing is not applicable.

5.3.3.1.3 Temperature and Pressure Cycles

The reactor vessel design cycles are presented in Section 3.9.

5.3.3.1.4 Static and Dynamic Loadings

Stabilizer brackets, located below the vessel flange, are connected with flexible couplings to tension bars mounted on the top of the reactor shield wall. The reactor shield wall is laterally supported by stabilizers which are attached to gibs passing through the drywell wall and embedded in the concrete structure outside the drywell. The lateral supports limit horizontal vibration and resist seismic and jet reaction forces, yet the tension bars will permit radial and axial expansion.

Vertical loads from the reactor vessel are transmitted to the foundation through the vessel skirt, support girder, and support pedestal. Lateral loads are transmitted to the building through vessel stabilizers. The vessel stabilizers are attached near the top third of the vessel and are connected to the top of the concrete and steel reactor shield wall. The reactor shield wall in turn is anchored at the base to the top of the vessel pedestal and restrained at the top by a horizontal tubular truss system. The lateral loads are transmitted through the truss system to the drywell shear lug mechanism. This shear lug mechanism permits vertical movement of the steel drywell, but restricts rotational movement. However, lateral loads are transmitted through the shear lug mechanism to the heavy concrete envelope around the drywell which is part of the reactor building. A portion of the lateral loads are transmitted from the reactor vessel to the vessel pedestal and then to the foundation. Additional details of the loadings and supports are addressed in Section 3.9.

5.3.3.2 Materials of Construction

The materials of construction for the reactor vessels are addressed in Sections 5.2.3.1 and 5.3.1.1 and in the purchase order and vessel design report contained in Reference 15.

5.3.3.3 Fabrication Methods

The methods used in fabricating the reactor vessels are addressed in Sections 5.2.3.3 and 5.2.3.4, Section 5.3.1, and Appendices 5A and 5B. The major fabrication processes involved are electroslag welding, submerged arc welding, hot rolling of thick vessel plate, forging of nozzles and vessel closure flanges, and stress-relieving heat treatments. A summary of the reactor vessel fabrication history is presented for both units in References 7 through 9.

5.3.3.4 Inspection and Testing Requirements

The reactor vessel was stamped with an ASME Code N-symbol verifying that a hydrostatic test was satisfactorily made and all other required inspection and testing was satisfactorily completed. Such application of the ASME Code N-symbol together with final certification confirms that all applicable ASME Code requirements have been complied with.

The reactor coolant system was given a system hydrostatic test in accordance with code requirements prior to initial reactor startup. Before pressurization, the system was heated to 60°F above the NDT temperature. Piping and support

hangers were checked while thermal expansion was in progress. Recirculation pump operation was also checked.

A system leakage test at operating pressure is made on the primary system following each removal and replacement of the reactor vessel head. The system is checked for leaks and abnormal conditions which are corrected before reactor startup. The minimum vessel temperature during system hydrostatic testing and system leakage testing is governed by the Technical Specifications in accordance with the curves shown in Figure 5.3-3.

System hydrostatic tests are performed after repair or replacement to the system. The hydrostatic test pressure and testing conditions are detailed in ASME Section XI and Figure 5.3-3.

Periodic examinations and tests to ensure system integrity[10, 11] are carried out as part of an ongoing ISI program as required by ASME Section XI. See Section 5.2.4 for a more detailed description.

5.3.3.5 Shipment and Installation

The reactor vessels, closure heads, closure head studs, and the nuts were packaged and shipped in accordance with the purchase specification. The reactor vessels were shipped on skids which were an aid in uprighting the vessels in preparation for setting them in place. Hoisting slings were provided for lifting both the reactor vessels and the closure heads. General Electric Quality Assurance personnel assured that all shipments and installation met the appropriate regulations and requirements.

5.3.3.6 Operating Conditions

The reactor vessel is designed for the anticipated transients which are expected to occur or could occur during the designed 40-year life.

5.3.3.6.1 Original Design Basis Transients and Cycles

The original design basis transients and estimated cycles are presented in Table 3.9-1 and are addressed in Section 3.9.1.1.

5.3.3.6.2 Revised Design Basis Transients and Cycles

The revised design basis transients and cycles[12] are presented in Table 3.9-1 and are addressed further in Section 3.9.1.1 along with the fatigue analysis of the reactor vessels.

5.3.3.7 Inservice Surveillance

The ISI program delineates and implements the requirements of 10 CFR 50.55a and the ASME Code Section XI.

In the ISI plan, certain examination requirements as stated cannot be performed. Therefore, relief requests are filed in accordance with 10 CFR 50.55a(g)(6)(i).

The ISI and augmented inspection programs are addressed further in Section 5.2.4.

Section 5.3.1.6 addresses the material surveillance program and the withdrawal schedule for internal samples exposed at the beltline region of the reactor vessels.

The reactor material surveillance programs is addressed in Section 5.3.1.6.

5.3.4 References

1. L.C. Hsu, A Comprehensive Analysis of the Structural Integrity of GE-BWR Vessels Subject to the Design Basis Accident, November 1968.

2. Letter from M.H. Richter (CECo) to T.E. Murley (NRC), dated July 3, 1991, Reactor Vessel Head Closure Studs.

3. H.G. Mehta (GE), Fracture Mechanics Based Structural Margin Evaluation for Commonwealth Edison BWR Reactor Pressure Vessel Head Studs, GE-NE-523-93-0991, DRF 137-0010, September 1991.

4. H.H. Klepfer, et al., Investigation of Cause of Cracking in Austenitic Stainless Steel Piping, Volume 1, NEDO-21000, General Electric, July 1975, p. 8-1.

5. T.A. Caine (GE), Pressure-Temperature Curves per Regulatory Guide 1.99, Revision 2 for the Dresden and Quad Cities Nuclear Power Stations, SASR 89-54, DRF 137-0010, Revision 1, August 1989.

6. NRC Regulatory Guide 1.99, Revision 2, May 1988, Radiation Embrittlement of Reactor Vessel Materials.

7. Letter from R. Stols (CECo) to T.E. Murley (NRC), dated July 2, 1990, Reactor Vessel Fabrication History Summary (Transmitting Document 508-9006, Dresden II Upper Vessel Contract Variation Review by General Electric Company, June 29, 1990).

8. Letter from M.H. Richter (CECo) to T.E. Murley (NRC), dated September 4, 1990, Summary of Fabrication History for the Unit 3 Upper Reactor Vessel.

9. Letter from R. Stols (CECo) to T.E. Murley (NRC), dated January 3, 1991, Reactor Vessel Fabrication History Summary.

10. S.P. Selby and W.E. Brooks, "CRDM Nozzle Inspection," Nuclear Plant Journal, November/December 1992, pp. 56ff.

11. S. Ranganath and T.L. Chapman, "Inservice Inspection Experience in Boiling Water Reactors," Nuclear Plant Journal, November/December 1992, pp. 77ff.

12. T.A. Caine (GE), Tabulation of Thermal Cycles for Dresden Nuclear Power Station Units 2 and 3, SASR 89-111, Revision 2, November 1990.

13. BWRVIP-86-A: "BWR Vessel and Internals Project, Updated BWR Integrated Surveillance Program (ISP)," Final Report, October 2002.

14. Letter from M. Banerjee (U.S. NRC) to J. L. Skolds, dated September 29, 2003.

15. "Dresden 2 Reactor Pressure Vessel Design Exhibits."

16. "Dresden Station Units 2 and 3 Reactor Vessel Electroslag Weld Report."

17. Dresden Station Unit 3 Recirculation Pipe Replacement (RPR) Project Completion Report.

Table 5.3-1

NEUTRON FLUX MONITOR AND BASE METAL SAMPLE WITHDRAWAL SCHEDULE

	Withdrawal Schedule[1]	Part Number	Location	Comments
Unit 2	1977	6	Near core top guide - 180°	Accelerated sample
	1980	8	Wall - 215°	
	2003	7	Wall - 95°	
	2003	9	Wall - 245°	
		10	Wall - 275°	Standby
Unit 3	1978	16	Near core top guide - 180°	Accelerated Sample
	1981	18	Wall - 215°	
	30 EFPY	19	Wall - 245°	
		15	Wall - 65°	Standby
		20	Wall - 275°	Standby

Note:

1. Withdrawals completed are listed by year withdrawn. Future withdrawals are listed by the effective full power years (EFPY) anticipated at withdrawal.

5.4 COMPONENT AND SUBSYSTEM DESIGN

5.4.1 Reactor Recirculation System

5.4.1.1 Design Bases

The performance objective of the recirculation system is to provide forced convection cooling of the reactor core to permit operation at rated power. This forced convection increases the power output of the core above the capability of a natural convection system. To achieve this objective, the recirculation system was designed using the following bases:

A. The reactor recirculation system provides adequate fuel barrier thermal margin during postulated transients. That is, all transients due to normal operation and to single operator error or equipment malfunction result in a minimum critical power ratio (MCPR) greater than the safety limit MCPR.

B. The design suction pressure is 1175 psig. The suction pressure was selected relative to the reactor vessel design pressure.

C. The design discharge pressure is 1325 psig. The discharge pressure was established at a nominal 150 psi above the suction pressure to accommodate the pressure output of the recirculation pumps.

D. The recirculation piping system (pipes and valves) design codes are ASME Section I (1965 Edition with Winter 1966 Addenda) and USAS B31.1 (1967). In addition, nuclear code cases N-1, N-2, N-3, N-4, N-7, N-8, N-9, N-10, and N-11 apply. ASME Section I also permits an increase of 20% in allowable stress. The intent of using USAS B31.1 and ASME Section I for the recirculation piping system is to provide a piping system of such quality as to be equivalent to the reactor vessel to which it is attached.

   Stresses for replacement piping in the Unit 3 recirculation system have been analyzed to show compliance with the original design codes (see Section 3.9.3.1.3.4).

   Recirculation system valve sizes were selected to match piping sizes, which were determined based upon flowrate and velocity requirements. The recirculation loop flowrates through the suction and discharge valves were determined based upon heat balance and jet pump hydraulic requirements. The maximum differential pressures for opening the discharge valves were based on the assumption that the recirculation pumps are running at the speed required for minimum flow when the valves are opened. The maximum differential pressure ratings for closing valves were based upon low pressure coolant injection (LPCI) requirements under loss-of-coolant accident (LOCA) conditions for the discharge and upon maintenance considerations for the suction valves.

E. The recirculation pump casing design code is ASME Section III, Class C. The recirculation pumps are classified as machinery and as such are specifically exempt from the jurisdiction of any section of the ASME Code or of the USASI Code for pressure piping. The Standards of the Hydraulic Institute are the only applicable standards; however, they are more cogent to the testing and performance of the pump and consequently provide little or no guidance in the areas of casing quality and structural integrity. Therefore, to assure that the pump casing will contain pressure which is at least equivalent to the reactor vessel pressure, the pump casing was designed in accordance with ASME Section III, Class C. This class is used because the pump casings do not experience the pressure and temperature transients that the reactor vessel and certain piping connections experience and so do not need the cyclic analysis required by Class A of ASME Section III.

5.4.1.2 Description

5.4.1.2.1 General System Description

The reactor recirculation system consists of 2 external recirculation pump loops and 20 jet pumps internal to the reactor vessel. Each external loop consists of a 28-inch diameter line, a motor-driven recirculation pump, two motor-operated gate valves for pump isolation, and required recirculation flow measurement devices.

The recirculation system piping is shown in Drawing M-26 for Unit 2 and Drawing M-357 for Unit 3.

The recirculated fluid consists of saturated water, rejected from the dryers and steam separators, which has been mixed with subcooled feedwater. This flow mixture passes down the annulus area between the vessel and the core shroud. About 35% of this flow exits the vessel and goes through the two outside driving loops. The other 65% of the flow is the driven flow of the jet pumps. This flow enters the jet pumps at the suction inlet and is accelerated by the driving flow from the jet pump nozzles.

Each external recirculation loop discharges high-pressure flow into an external manifold from which connections lead to the jet pump nozzles. The driving and driven flows are mixed in the pump throat section, resulting in partial pressure recovery. The balance of pressure recovery occurs in the jet pump diffusing section.

The operating instrumentation on the recirculation system includes:

A. Recirculation pump differential pressure and flow instruments;

B. Dual pressure taps located along the diffuser for measuring pressure differentials on 4 of the 20 jet pumps;

C. Single pressure taps located in the diffuser section, indicating the pressure differential between the diffuser and the core inlet plenum, on 16 jet pumps; and

D. Core plate differential pressure instrumentation.

The recirculation flow is measured by summing the flows on individual jet pumps using pressure sensors which give an indication of core flow. Pressure taps are located on the diffuser section of each of the 20 jet pumps. Four of these pumps, located approximately 90° apart, were calibrated prior to installation. The correlations obtained from these 4 pumps are applied to the pressures measured in the remaining 16 jet pumps. In this manner, a representative flowrate in the reactor can be obtained at an estimated accuracy of 2.5% and a confidence level of 95%. The differential pressure data are monitored and trended for any long-term changes from the datum level. Such changes may be an indication of nozzle erosion or other long-term flow effects.

5.4.1.2.2 Reactor Recirculation Pumps, Valves, and Piping

The reactor recirculation pumps are single-stage, centrifugal units with dual mechanical shaft seals. Each is rated to deliver 45,000 gal/min at 56 Hz.

The 2A, 2B, and 3B recirculation pump shaft, impeller, and covers have been replaced. The replacement items are designed to improve the lifetime, maintainability, and inspectability of the pump and to minimize shaft and cover cracking. The replacement design added a 1-inch hole along the axis of the shaft to accommodate ultrasonic inspection of the shaft without removing the rotating element from the pump.

The replacement cover/heat exchanger design for the 2A pump relocates and shortens the internal heat exchanger holes to maximize the ligament thickness between the bore and the holes and to increase the margin against possible thermal cracking in the cover bore. The replacement cover has three 1-inch diameter inspection ports drilled into the cover to allow the use of inspection probes to inspect some of the pump internal parts during an outage. The case-to-cover gasket has been upgraded to a dual gasket to provide added margin against case-to-cover joint leakage. The original heat exchanger drain hole which was identified as a potential contributor to the cracking problem has been eliminated.

The diameter of the impellers on the 2A, 2B, and 3A reactor recirculation pumps are 28-9/16 inches in diameter. The diameter of the impeller on the 3B reactor recirculation pump is 29 inches in diameter. Testing has shown no significant difference in flows on Unit 3 because of the different sized impellers.

The revised design for the 2A, 2B and 3B pump covers meet the requirements of ASME Section III, Class C. With the exception of the studs and nuts, the materials for the pressure boundary parts remain the same as the original materials. However, these materials have a carbon content not to exceed 0.03% to reduce susceptibility to sensitization.

The 4th generation rotating assembly installed on the 2B and 3B pumps replace the original two heat exchangers with a single cooler. The new cooler is designed to be a combined cooler/heater assembly. The replacement cooler remains sufficient to prevent overheating of the mechanical seal. The newly

incorporated heater gradually increases purge water temperature as the water leaves the cooler, flowing downward along the shaft toward the hot process water. The heater is designed to control heat-up of purge water to limit temperature fluctuations under normal conditions to less than 50 degrees F, maintaining fluctuating stresses below the endurance limit of the shaft material. The heater also serves to separate the cover, which is a primary pressure boundary component, from the CRD purge water flow. The replacement cover is therefore not subjected to the lowered purge water flow temperature fluctuations.

Both recirculation pumps are driven by variable speed induction motors, which receive electrical power from variable frequency motor-generator sets. Recirculation flow control is described in Section 5.4.1.2.4.

The recirculation pumps are vertical and are arranged within the drywell to facilitate inspection, maintenance, and/or removal during unit shutdown conditions. The recirculation pumps and motors are located below the reactor vessel in order to take advantage of the elevation head for net positive suction head (NPSH) requirements.

The Unit 2 equalizer line connecting the two recirculation loops is a stainless steel pipe with two manual main isolation valves. A 2-inch line with a manual operated valve is provided to bypass each of the equalizer line main isolation valves. During operation, one bypass valve is normally open to prevent hydrostatic pressurization of the section of equalizer line between the isolation valves due to heatup. In the event that one recirculation pump fails or is shut off, the discharge valve in the inoperative driving loop is closed. In this case, the original plant design required the equalizer line valves to be opened, which would provide positive pressure to all jet pumps thus preventing backflow through any jet pump. This equalizer line usage was found to lead to unstable flow, causing the operative recirculation pump to overspeed and trip. Currently, licensing conditions prohibit use of the equalizer line during reactor power operation. The Unit 3 equalizer line and associated valves were removed. The Unit 2 equalizer line is used for system decontamination only. Single loop operation is discussed in Section 4.4.

The recirculation lines have been provided with a system of pipe restraints to limit pipe motion so that any reaction forces associated with a pipe split or circumferential break will not jeopardize containment integrity. These restraints allow for unrestricted movement of the piping due to pressure and temperature expansion. Design pressures range from 0 psig to 1250 psig. Design temperatures range from 70°F to 575°F. Positioning of the restraints assumes that the strength of the pipe is maintained on both sides of the circumferential break and over the entire length of the split pipe.

5.4.1.2.3 Jet Pumps

The jet pumps, which have no moving parts, are located between the core shroud and the reactor vessel wall, as shown in Figure 5.4-5. Each pair of jet pumps is supplied driving flow from a single riser pipe. The risers have individual vessel penetrations and receive flow from one of two external manifolds.

Each jet pump consists of a diffuser, a throat section, and a nozzle section as illustrated in Figure 5.4-6. The jet pump diffuser is a gradual conical section terminating in a straight cylindrical section at the lower end which is rigidly attached to the shroud support. The throat section is a straight section of tubing with a short diffuser entrance section at the lower end. The throat section and the nozzle section are clamped together and are attached to the riser and diffuser with brackets. These brackets provide structural rigidity and yet permit differential expansion between the carbon steel vessel and the stainless steel jet pump.

The overall height from the top of the inlet nozzle to the diffuser discharge is 18 feet, 7 inches; each diffuser has an outside diameter of 20.75 inches. Replacement of the throat and nozzle sections of the jet pump is possible.

5.4.1.2.4 Recirculation Flow Control

A typical power-flow map is shown schematically in Figure 4.4-1. This figure illustrates the concept of recirculation flow control, but may not be accurate for the current cycle.

Recirculation pump speed is controlled by varying the frequency (speed) of the recirculation pump motor power supply. Frequency variation is accomplished with a synchronous motor-generator set coupled by a variable slip hydraulic coupling. A scoop tube and positioner control the oil level in the hydraulic coupling. The more oil in the hydraulic coupling, the higher the motor-generator set output frequency. The scoop tube is capable of removing (scooping out) oil from the hydraulic coupler impeller casing at a greater rate than can be supplied, thereby reducing (i.e., controlling) the motor-generator set output frequency. The hydraulic coupling limits the generator output frequency to a range of approximately 20% to 100% of rated frequency. The minimum pump speed is limited to 29% of rated speed when in master control. When feedwater flow is below 20% of rated, the recirculation flow controller is limited to a maximum pump speed of 30% as specified by operating procedures. This speed typically results in a core flow of about 30% rated flow at zero power or about 40% rated flow at the average power range monitor (APRM) rod block power of about 68% (exact values are cycle dependent).

The recirculation flow controllers normally limit pump speed to 99% of rated. In addition, the motor-generator set scoop tube mechanical and electrical stops are verified to ensure the overspeed setpoints are within the limits specified in the Core Operating Limits Report (COLR) for Minimum Critical Power Ratio (MCPR).

An interlock in the reactor recirculation flow controller circuit will quickly reduce recirculation pump speed to the equivalent of a nominal 70% core flow on loss of a feedwater or condensate/booster pump. The recirculation runback interlock is intended to reduce the potential of a reactor scram on low reactor water level, in the event of a sudden loss of a condensate or feedwater pump.

In the event of a loss of power to both driving loops, the inertia of the motor-generator sets sustains reactor recirculation sufficiently to prevent exceeding reactor thermal limits. Proper design of the power connection from the motor-generator sets makes simultaneous faulting of these buses unlikely.

For testing and maintenance, the motor-generator set scoop tube positioner can be locked out and controlled manually using appropriate operating procedures.

5.4.1.3 System Operation

Steady-state operation of the BWR unit with jet pumps has been investigated; the conclusion of this study was that unit operation is highly satisfactory. The operational characteristics are presented in Sections 5.4.1.3.1 through 5.4.1.3.3.

5.4.1.3.1 Principles of Jet Pump Operation

The principle of operation of the jet pump is the conversion of momentum to pressure. The fluid emerging from the driving nozzle, called the driving or motive flow, has a high velocity and a high momentum. By a process of momentum exchange, suction fluid is entrained. The combined flow enters the mixing section or throat where the velocity profile is converted by mixing such that the momentum decreases with a resultant pressure increase. For optimum operation, the velocity profile at the exit of the throat should be as flat as possible; i.e., the boundary layer should be as thin as possible. The flat velocity profile gives the minimum momentum with the resultant highest pressure increase in the throat. In the diffuser, the relatively high velocity of the combined stream is converted to a still higher pressure. The combined stream flows out of the diffuser at the pressure required to provide the necessary recirculation flow for the core.

The performance of jet pumps is described by the following terms:

A. Area ratio - R

The area ratio, R, is the ratio of the cross-sectional area of the nozzle to the cross-sectional area of the throat. The mathematical formula defining R is as follows:

$$R = \left(\frac{A_n}{A_t}\right) = \left(\frac{D_n}{D_t}\right)^2 \qquad (1)$$

where A_n and D_n are the area and diameter of the driving nozzle, respectively, and A_t and D_t are the area and diameter of the jet pump throat, respectively.

B. Flow ratio - M

The flow ratio, M, is the ratio of the driven mass flow (induced from the suction chamber) to the driving mass flow through the nozzle. The mathematical formula defining M is as follows:

$$M = \frac{w_2}{w_1} \qquad (2)$$

where w_1 and w_2 are the driving and driven mass flows, respectively.

C. Head ratio - N

The head ratio, N, is the ratio of the specific energy increase of the suction stream to the specific energy decrease of the driving stream. The mathematical formula defining N is as follows:

$$N = \frac{P_d - P_2}{P_1 - P_d} \qquad (3)$$

where P_1, P_2, and P_d are the specific energies of the driving flow, suction flow, and discharge flow, respectively. Specific energy, P, is the sum of the pressure energy and the kinetic energy of the stream per unit mass (since the internal energy is constant), as expressed in the following equation:

$$P = \frac{p_s}{\rho} + \frac{V^2}{2g_c} \qquad (4)$$

where:

p_s = static pressure at point of interest

V = velocity

g_c = dimensional constant, 32.2 lb_m-ft/lb_f-s^2

ρ = density

Pressure gain due to physical length is not credited to the jet pump since it would be realized whether the pump was present or not.

D. Efficiency - η

The efficiency, η, is the ratio of the total energy increase of the driven stream to the total energy decrease of the driving stream, multiplied by 100 (to give the percentage). The mathematical formula defining η is as follows:

$$\eta = \left(\frac{w2}{w1}\right)\left(\frac{Pd - P2}{P1 - Pd}\right) x\,100 \qquad (5)$$

Comparison with the above definitions shows the following relationship:

$$\eta = MN \times 100 \qquad (6)$$

Hence η is often called the "MN efficiency."

Although η is referred to as an efficiency, it is actually only a figure-of-merit of performance. This term is more useful for developing jet pumps than for designing jet pump systems. It does not correspond to the usual definition of efficiency, i.e., the ratio of the outlet energy to the inlet energy. The true mechanical efficiency, e, is related to the figure-of-merit efficiency, η, by the following relationship (assuming $P_2 = 0$):

$$e = \frac{M + 1}{M + \left(\frac{\eta}{100}\right)} \qquad (7)$$

The true mechanical efficiency, e, (multiplied by 100) is always greater than the jet pump figure-of-merit efficiency, η.

The head-flow characteristic of a jet pump system has less slope at the design point than that of a non-jet-pump system because of the higher head required on the driving flow. Hence, the total recirculation flow may be more sensitive to any difference between design and actual core pressure drops. This increased sensitivity can be adequately handled in the design since there is considerable design and operational experience in the determination of pressure drop through the core and internal flow loop.

5.4.1.3.2 Recirculation Pump Startup

The recirculation pumps are located approximately 60 feet below the normal water level. This static head alone does not provide sufficient NPSH during power operation with recirculation pump speeds greater than minimum speed (specified in Section 5.4.1.2.4). However, during normal operation, the feedwater subcools the inlet flow to the recirculation pumps more than enough to prevent cavitation.

During plant startup, when the reactor is being pressurized, there is no feedwater flow. Under these conditions, the recirculation pumps are started in the following manner:

1. First, establish recirculation pump operation at minimum speed as described below.

   The recirculation pumps are started and brought up to minimum speed with the discharge valves closed. When minimum speed is established, the discharge valves are jogged open. (An automatic jogging circuit with a separate control switch provides discrete ½-second and 1-second OPEN signals to the valve to facilitate pump startup.)

2. With the pumps at minimum speed, control rods are withdrawn to heat the system, establish steam production, and increase system pressure. As soon as steam flow is established, feedwater flow begins and the downcomer flow is subcooled. When the feedwater flow reaches a minimum value (and the recirculation pump discharge valves are fully open), the recirculation flow limiters (see Section 7.7) are bypassed for the respective loops. The recirculation pumps may then be safely operated at speeds up to rated speed.

3. For a return to two recirculation pump operation from single loop operation, the operating pump speed is run back to 30% (minimum speed) while warming the idle loop to be within the Technical Specification temperature requirements. After starting the idle recirculation pump, the recirculation pump speed mismatch must be within 10% or after a 20 second time delay, the recirculation pump speed interlock will lock the recirculation pump speeds. This ensures symmetric speed operation of the recirculation pumps during idle loop startup which prevents levels of jet pump riser vibration that are higher than normal.

5.4.1.3.3 Special Operating Cases

There may be special situations when it is desired to operate the recirculation loops with available NPSH from static head only but without adequate available NPSH for full speed operation. For instance, it may be desired to run the pumps with the vessel head removed to inspect the water flow. In these circumstances, the recirculation pumps may be operated at reduced speed.

Static head alone provides adequate NPSH for the recirculation pumps to be operated at about half speed with the vessel head removed if the system water temperature is not too high. Figure 5.4-7 shows the NPSH available as a function of temperature at various pressures. Note that the NPSH given applies to the location near the recirculation pump inlet where the temperature and pressure are measured. Besides recirculation pump NPSH, consideration is given to the effects of NPSH on jet pumps and recirculation pump seals.

During such operation, the recirculation pump energy is converted into sensible heat in the system water. For prolonged operation, this energy may be removed by the reactor shutdown cooling system (see Section 5.4.7).

5.4.1.4 Performance Evaluation

The reactor recirculation system circulates coolant past the fuel with high system reliability. Even when the recirculation pumps are not operating, a high natural circulation rate provides fuel cooling. Malfunctions of the recirculation system and its control systems have been evaluated for a jet-pump system relative to a non-jet-pump system as follows:

A. Use of a jet pump recirculation system contributes to the safety of the reactor system. The risk of accidents associated with the recirculation system is reduced because the number of recirculation loops is minimized.

B. The consequences of a postulated LOCA are rendered less severe because the higher natural circulation potential of the jet pump system tends to improve the heat-flux-to-coolant-flow recirculation relationship.

Extensive tests and analyses were conducted to evaluate the performance characteristics of jet pumps, particularly with respect to pump design requirements and effects of the pumping system on hydraulic and nuclear stability. A summary of these tests is presented in Sections 5.4.1.4.1 through 5.4.1.4.6. The analyses are presented in Chapter 15.

Sufficient investigations have been conducted and documented to show that the design of the jet pump is sound and that it will operate in a stable and predictable manner.

5.4.1.4.1 Jet Pump Efficiency

Tests were conducted to study jet pump performance under varying conditions of flow and other design parameters, to extend the range of flow ratios studied, and to improve the efficiency of the jet pump. In addition to providing more design information, this program yielded a better understanding of how the theory applies to actual jet pump operation. The original jet pump was used in this program with nozzles designed for three flow ratios (M = 1, 1¼, and 2½). The following effects were studied: throat nozzles, transient behavior, and simulated erosion of the driving nozzles.

Figures 5.4-8 and 5.4-9 show the test results for the nozzle with the design flow ratio of 2½. In Figure 5.4-8, three curves show the jet pump efficiency as a function of the flow ratio. The upper curve shows the calculated jet pump performance with only mixing losses (no friction losses) and represents a maximum attainable efficiency for a simple jet pump. The second curve shows the calculated jet pump performance assuming a reasonable friction loss. The third curve shows the observed performance, which is reasonably close to predictions. On Figure 5.4-9, the same curves are plotted as head ratio, N, versus flow ratio, M. The purpose of this plot is to demonstrate the value of the N-M curves for design purposes, i.e., that the N-M curves are straight at least over a central range of flow ratio values.

Maximum efficiencies that were obtained during the second test phase using cold water are shown below:

Design Flow Ratio	Efficiency (%)
1	38½
1¼	36½
2½	33½

These data are plotted on Figures 5.4-10 and 5.4-11, which show calculated curves of peak-efficiency flow ratio, M_p, and head ratio, N_p, as functions of the area ratio, R. The solid curves are calculated values. (These are the same curves as those shown on Figures 5.4-8 and 5.4-9 for reasonable friction.) The dashed curves through the data points show the experimental performance.

To demonstrate the performance of a jet pump system, a multiple jet pump test unit consisting of four jet pumps operating in parallel was built and tested at reactor conditions in the test facility at the Moss Landing Power Station. These pumps were similar to the original jet pump in having a flow ratio, M, of 1, but had a longer throat length-to-diameter ratio (about 8 compared to 6 for the original jet pump) and an 8° diffuser (the original jet pump had an 11° diffuser in which separation occurred near the outlet). This test demonstrated the definite stability of the system, in spite of rather large intentional disturbances in flow to or from individual jet pumps. In addition, the modified design resulted in an efficiency of 38% for a flow ratio of 1.1, both at reactor conditions and at cold water conditions.

5.4.1.4.2 Partial Flow

Studies have been performed on partial recirculation flow during natural circulation and during single recirculation pump operation.

Natural circulation will produce approximately 30% of rated flow. Currently, licensing conditions prohibit use of the equalizer line during reactor power operation (see Section 5.4.1.2.2). For single recirculation pump operation without an equalizer line, the jet pumps in the active loop are driven while those in the idle loop experience considerable backflow (the active loop pump speed above which backflow occurs is about 20 to 40% of rated speed). The resulting flow through the core is approximately 55% (70% of rated power).

Single loop operation is subject to the restrictions listed in the Technical Specifications. Administrative limits may also be imposed on individual loops to prevent flow-induced jet pump vibration problems.

Running the recirculation pumps at different speeds may cause flow-induced vibrations in the jet pumps. An interlock on the recirculation pump speed control prevents the speed mismatch from approaching a magnitude where jet pump vibration would lead to jet pump failure. The recirculation pump speed mismatch interlock primarily serves to ensure that the LPCI loop selection logic (see Section 7.3) is not confused. The LPCI loop selection logic compares recirculation loop riser ΔPs on the two loops to determine which loop is broken so that injection may be made into the intact loop. The mismatch interlock ensures that misleading ΔPs are not generated by large differences in pump speed. When the recirculation pump speed differential reaches a limit, the mismatch circuit prevents the slower pump from decreasing speed and the faster pump from increasing speed.

5.4.1.4.3 Effects of Two-Phase Flow on Jet Pump Performance

The carryunder and saturated circulated flow from the steam separators is normally quenched and subcooled at the entrance of the downcomer by mixing with the feedwater flow. There has been considerable investigation of the effects of carryunder on jet pump system performance because of the potential for reducing the feedwater flow to the point where a jet pump system must operate with saturated coolant or possible carryunder and thus begin to cavitate. (Also, for certain breaks the jet pumps will experience a two-phase environment.)

A feedwater flow of at least 12.6% of rated flow, with the reactor at full recirculation flow conditions, will provide sufficient subcooling to prevent cavitation in the jet pumps. Further increases in the temperature (i.e., further decreases in subcooling) of the jet pump suction flow, up to the point of cavitation, produces no appreciable effect on flow.

At the point of cavitation, the suction flow can no longer be increased by pushing the driving pumps harder. Driving flow itself can be increased under cavitating conditions within the limited capacity of the recirculation pumps.

The design of the reactor internals, including the downcomer region and the feedwater sparger, is such that substantial mixing is accomplished between the feedwater and the recirculation water before reaching the jet pump inlets.

Jet pump performance has been shown experimentally to be relatively insensitive to a two-phase environment. Some performance deterioration can be expected but not the dramatic decrease typical of low-pressure centrifugal pumps. Instead, jet pump performance gradually decreases as vessel pressure decreases below the saturation pressure. The reasons are as follows:

A. For a given pressure decrease, the enthalpy change is less at a high vessel pressure than at a low vessel pressure. Therefore, the increase in quality as pressure decreases below saturation pressure is relatively small.

B. For a given quality change, the volumetric change at a high vessel pressure is small compared to the volumetric change at a low vessel pressure. Therefore, a given quality increase at high pressure reduces the fluid density by a relatively small amount.

C. It has been demonstrated in many tests that the jet pump process is essentially a volumetric pumping process. Therefore, since the fluid density decreases gradually, the mass flowrate also decreases gradually.

D. With two-phase flow, some slippage occurs, so mixing is not as good as with liquid flow and the velocity profiles shift. Therefore, jet pump mixing section efficiency gradually decreases, causing the pump performance to gradually decrease.

Thus the effect of cavitation is a slight reduction of flow ratio as the subcooling of the suction stream is gradually decreased. There is no reduction in driving flow, so the result is a gradual reduction in total flow.

The gradual deterioration of jet pump performance as fluid subcooling is reduced has been demonstrated experimentally. The postulated loss of subcooling could be the result of a decrease in vessel pressure, such as the decrease that would occur following a postulated line break. It was shown that even when suction subcooling was reduced to zero, the jet pumps were operating at 95% of rated flow. Figure 5.4-12 shows the effect of two-phase flow on jet pump performance.

When considering two-phase effects on jet pumps, the system head must also be considered. When the lower plenum saturates, the system head increases because of the increased two-phase flow losses. As the system head increases, the jet pump flow decreases, which shifts the jet pump operating point to a lower M value on the M-N performance curve. (The jet pump M-N curve is similar to a centrifugal pump Q-H performance curve.) Experiments show that as jet pump flow decreases (lower M), two-phase effects are eliminated for values of M below 1.5 when suction flow is saturated. This phenomenon is shown in Figure 5.4-13. The terms in the figure are defined below:

M = suction flowrate/primary flowrate

N = head ratio = $(p_d - p_2)/(p_1 - p_2)$

where:

p_d = jet pump diffuser discharge static pressure

p_2 = suction flow inlet static pressure

p_1 = primary flow upstream static pressure

The jet pump performance analytical model during postulated loss-of-coolant transients is based on a conservation of momentum model. The pressure rise in the mixing chamber is calculated by performing a momentum balance from input to output of the chamber. The basic assumptions used are as follows:

A. The net momentum vector has no transverse component;

B. The static pressure in the jet and suction (primary and secondary flow) streams are equal;

C. The drive and suction flows are totally mixed at the diffuser inlet; and

D. The fluid transient time through the mixing chamber is small compared to the change times of the jet pump inlet flow.

Figure 5.4-14 shows the comparison between the analytical model predictions and experimental data near the normal operating point. The analytical model is in excellent agreement with the experimental data for the entire range of the jet pump M-N curve.

In the air-water tests of the jet pump apparatus, it was determined that for a constant discharge pressure, the total flow was reduced less than 1% for a volumetric carryunder equivalent to 0.2 wt% steam at reactor conditions. With a carryunder of 1¼ wt%, the total flow was reduced by about 6% while discharge pressure was reduced by about 14%. From these and other tests, it has been concluded that jet pump performance would not be compromised by a carryunder bubble content equivalent to 0.3 wt% steam in the suction flow stream, which is a reasonably expected upper limit.

In the multiple-unit tests which were conducted at reactor service conditions, carryunder at the entrance of the jet pumps was simulated by introducing superheated steam to the slightly subcooled suction stream. In the evaluation of these tests, it was deduced that some of the superheated bubbles might possibly have passed entirely through the jet pump apparatus. Nevertheless, the jet pump discharge pressures remained surprisingly high.

Superheated bubbles represent an unrealistic condition. It is most probable that any bubbles formed due to cavitation will be collapsed well before they pass completely through the diffuser section of the jet pumps. It is extremely unlikely that bubbles could be injected into the core via the jet pumps at reactor conditions.

Loss of feedwater would cause a degradation of the flow ratio and thus a reduction of recirculation flow. This in turn would reduce the reactor power without safety implications. The loss of subcooling would further reduce the reactor power level.

5.4.1.4.4 System Stability

Loop tests of a jet pump recirculation system were conducted at the General Electric Steam Separation Test Facility at Moss Landing Power Station. Simulation of reactor hydraulic conditions can be accomplished at this facility. One series of tests was made on a multiple-unit assembly of four one-quarter linear scale jet pumps in combination with a recirculation loop, operating as a system under nominal reactor service conditions. The major objective was to determine, within required operating ranges, whether this hydraulic system would exhibit manifold instability. The tests assessed the operational hydraulic stability of the system as constructed and provided data for evaluating the behavior of reactor-installed jet pump recirculation systems.

No evidence of manifold instability or other form of system instability was ever observed, even under conditions where efforts were made to drive the system into poorly damped or unstable situations. It was also observed that a member jet pump on a common connected system gave steadier instrument readings than when operating alone and that the efficiency of a member jet pump remained relatively constant regardless of performance distortions imposed upon companion units.

It is believed that the complete jet pump reactor system is more stable than the system which was tested. The main reasons for this conclusion are as follows:

A. The design of the hydraulic loop of the system tested is such that the recirculation pump flow is artificially supplied from the jet pump discharge plenum. This results in a positive feedback influence on drive flow. In contrast, the actual reactor design is such that the recirculation flow is supplied from the common jet pump suction flow sump which presents no such positive feedback effect.

B. With the reduced number of jet pumps used in this test, disturbances presented to one member unit had a greater effect on the manifold pressure and, thus, on the total system. The tested system used jet pumps with suction-flow-to-drive-flow ratios of 1; whereas, those of reactor design have ratios of approximately 2. Pressure differential between manifold and suction sump in the former case is considerably smaller than for the latter case. Manifold instabilities are expected to be sensitive to the extent of this differential. Increased pressure differentials result in increased stability.

Thus, the test conditions were closer to any potential instability threshold than actual reactor system conditions, and the demonstration of total absence of any such instability during these tests provides high assurance that instability will also be absent from the reactor jet pump recirculation system.

The fact that jet pumps arranged in parallel operate in a stable manner is expected from analysis of the loop characteristics. Over 75% of the head loss in the recirculation pump loop occurs at the jet pump nozzles. Therefore, it is difficult for changes or disturbances in other portions of the loop or in the lines feeding the nozzles to affect the flow through or among the various nozzles. If a malfunction or disturbance occurs which affects one of the injection nozzles, the others in parallel

will have a tendency to compensate due to the negative slope of the recirculation pump head-flow characteristic.

At conditions of rated flow, and below the flow control range as well, the jet pumps are tightly coupled hydraulically to their respective injection nozzles. That is, if one injection nozzle partially malfunctions due to an arbitrarily imposed flow restriction, the jet pump will continue to function with reduced flow. For example, the injection flow in a nozzle could be reduced to 40% of rated flow (when pumping against rated core pressure drop) before flow through the diffuser would stop.

Thus, the entire system is resistant to perturbations; it has a strong tendency to remain at equilibrium over a wide range of conditions, resulting in stable parallel operation of jet pumps.

5.4.1.4.5 Cavitation Margins During Operation

Wide margins exist between normal operating conditions and those which cause cavitation in either the jet pumps or the recirculation pumps.

Normally, subcooling is about 20 Btu/lb. Tests on jet pumps indicate that incipient cavitation does not occur down to a subcooling of 3 to 4 Btu/lb. The recirculation pumps can operate at approximately the same conditions without cavitation.

The pressure existing at both the jet pumps and recirculation pumps is about 100 psi above that required to cause cavitation. Pressure changes during maneuvering do not exceed ± 10 psi maximum and, hence, are not of concern from the standpoint of cavitation.

It is difficult for large pressure reductions to occur. For example, a sudden 15% steam bypass results in only an approximate 7-psi transient reduction since the pressure regulator rapidly adjusts. An arbitrary 90-psi pressure reduction would reduce power to approximately 85% of rated power due to increased steam voids within the core. Since the pumps would continue to function, they do not contribute to the power reduction.

If pressure were decreased arbitrarily to values which would bring about cavitation in the pumps, flow through the core would decrease. This would result in a reduction in power along the power-flow characteristic of the core. An additional power decrease would result from increased steam voids due to the pressure reduction. However, there would be no safety implications because of the nature of the cavitation process itself, as discussed in the following paragraph.

It is highly unlikely that bubbles formed by cavitation within the jet pump would be injected into the reactor since they would collapse before leaving the diffuser. If bubbles were to enter the core, moderator void volume would increase and consequently power would decrease. Experience and tests with both centrifugal and jet pumps operating at high temperature and pressure indicate that cavitation is a gradual process and is not of a chugging or oscillatory nature. In addition, these tests have shown the absence of a sudden decrease in flow as cavitation is increased. Flow decreases gradually and in a continuous, orderly manner as cavitation is increased, in contrast to the more common experience involving pumps operating at low pressures of a few atmospheres. (For low-pressure pumps, the

large volume change associated with a phase change of the fluid results in a much sharper flow decrease as cavitation proceeds, since both centrifugal and jet pumps are basically volume flow devices.)

Therefore, even if cavitation were to occur, it would not become a driving function with respect to stability. Core power would gradually drop along the power-flow characteristic curve and stabilize at the new flow.

5.4.1.4.6 System Performance

A series of tests performed at the General Electric Moss Landing Test Facility verified previous system performance predictions. Throughout these tests, basic performance data were collected under conditions duplicating, in all important respects, the temperatures, pressures, and flowrates normally encountered by application jet pumps.

System performance predictions based on information which was verified in these tests are presented in Tables 5.4-1 and 5.4-2.

Concurrent with performing the tests at Moss Landing Power Plant, the loop in which the tests were being performed was analytically simulated using an impulse momentum model to describe the jet pump. Agreement between the analytical model results and actual test data was quite good, justifying the use of the impulse momentum model for the jet pump for transient analysis of nuclear reactors.

These transient tests were conducted in May of 1967 on a single quarter-scale jet pump and included pump trips and drive flow oscillations at frequencies from 0.1 Hz to 6.8 Hz. Tests of a quarter-scale dual-unit jet pump were conducted in October of 1967. Test results indicate that the jet pump impulse momentum model is quite satisfactory for predicting the transient behavior of the jet pumps as used in the BWR.

Tests were also conducted on a production model jet pump for Dresden Units 2 and 3 to verify design adequacy with respect to thermal expansion effects, vibration, and manifold instabilities, for both normal and accident conditions. A topical report, APED-5460,[1] which documented the testing and evaluation was submitted to the NRC.

Except the analysis of mixer-diffuser joint disengagement, APED-5460[1] included not only the testing of the production model jet pumps but also the design calculations showing the effects of thermal stresses during both normal operation and accident conditions.

Analysis of the mixer-diffuser joint engagement for the worst case under both normal installation and accident conditions showed a positive engagement (minimum of 0.28 inches) for all conditions. These results are summarized below:

A. Normal installation:

1. Minimum cold engagement - 0.72 inches and

2. Minimum hot engagement - 0.88 inches.

B. Accident conditions:

1. LPCI operation (vessel at 550°F, internals at 300°F) - about 0.25 inches,

2. Additional engagement change (stilts and diffuser at 70°F, vessel at 550°F) - about 0.19 inches, and

3. Minimum engagement - (0.72 - 0.25 - 0.19) inches = 0.28 inches.

5.4.1.4.7 Jet Pump Leakage

Leakage from the jet pump-shroud assembly has been evaluated for safety considerations. Based on LPCI and core spray capacities after a design basis accident, the maximum expected leakage in the jet pumps-shroud region is not considered to be a significant safety problem. A detailed discussion of jet pump leakage is contained in Section 6.3.2.2.3.1.

5.4.1.4.8 Equipment Malfunctions and System Transients

Abnormal operating conditions have been analyzed. The most significant equipment malfunctions and system transients are discussed in the following sections:

Malfunction/Transient	UFSAR Section
Jet pump malfunction	15.3.5
Flow control malfunctions	
Zero coupling demand	15.3.2
Full coupling demand	15.4.5
Recirculation pump trips	
Trip of both drive motors	15.3.1.1
Trip of one drive motor	15.3.1.2
Trip of one pump motor	15.3.1.3
Trip of two pump motors	15.3.1.4
Recirculation pump seizure	15.3.3
Cold recirculation loop startup	15.4.4
Inadvertent injection of HPCI	15.5.1

Section 15.8 describes anticipated transients without scram (ATWS) which cause both recirculation pumps to trip.

5.4.1.5 Tests and Inspections

5.4.1.5.1 Radiography Requirements

According to GE Specification 21A1208, radiography was required for the recirculation system pump casing in accordance with ASME Section III, Paragraph N323, 1965 Edition. The technique for radiography was to be in accordance with Paragraphs N624.2 through N624.7 of the ASME Code. Final radiography of the pressure containing casings was to be performed after at least one solution heat treatment.[2]

5.4.1.5.2 Performance Tests

Prior to installation, the following equipment data were obtained by performance tests:

A. Head-flow characteristics at both hot and cold flow conditions of the 4 jet pumps with dual pressure taps,and

B. The degree to which head-flow characteristics can be determined for the other 16 jet pumps with single pressure taps.

Following installation, detailed system performance tests were made.

Tests were performed at the following operating conditions:

A. Cold,

B. Hot standby,

C. 25% rated power,

D. 50% rated power,

E. 75% rated power, and

F. 100% rated power.

The tests consisted of determining the flow control range, coastdown characteristics following a recirculation pump trip, and single loop operation with and without the loop bypass line in operation. During all tests, the head-flow characteristics of the system were recorded.

Tests have been performed to determine the consequences of a loss of cooling water to the recirculation pump seal coolers. NUREG-0737 Item II.k.3.25 requires that the pump seals be designed to withstand a complete loss of ac power for at least 2 hours; loss of ac power in this case is assumed to be loss of offsite power. Seal leakage data for tested pumps made by Byron Jackson, which are bounding for the Dresden recirculation pumps made by this manufacturer, show that leakage rates are acceptable following loss of cooling to the pump seals.

5.4.1.5.3 Inspections

Inspection of the recirculation system is governed by the ASME Code Section XI.

The recirculation system's piping and components external to the reactor vessel comprise a portion of the reactor coolant primary system pressure boundary. As such, inspection of this equipment is governed by the ASME Code Section XI.

Recirculation system equipment internal to the reactor vessel is subject to inspection meeting the recommendations of BWR Vessel and Internal Project (BWRVIP) document "BWR Jet Pump Assembly Inspection and Flaw Evaluation Guidelines (BWRVIP-18)". This includes inspection of jet pump beams.

Daily operating rounds (procedures) are performed which include checks of recirculation system flow parameters and an evaluation of jet pump performance. The procedures utilize established operating databases, which in conjunction with the daily surveillance program, provide an early indication of an impending jet pump failure. Based on the established procedures and surveillance program, significant cracking of a jet pump beam will be detected at least seven days prior to beam failure and jet pump disassembly.

During the In-Vessel Visual Inspection of D2R15, a flaw was identified on the jet pump riser between jet pumps 15 and 16 at the reactor vessel nozzle thermal sleeve to elbow weld. An evaluation was performed that concluded that this piping is safe and acceptable for two additional fuel cycles. Monitoring of the condition of this equipment will be as required by the applicable ASME Section XI flaw evaluation and as recommended by BWRVIP document, "BWR Jet Pump Assembly Inspection and Flaw Evaluation Guidelines (BWRVIP-41)".

5.4.2. Steam Generators

This section is not applicable to Dresden Station.

5.4.3 Hydrogen Water Chemistry System

The hydrogen water chemistry (HWC) system was installed in Unit 2 as part of a pilot program to demonstrate that intergranular stress corrosion cracking (IGSCC) in sensitized austenitic stainless steel BWR recirculation piping can be controlled by injection of hydrogen into the reactor feedwater system. In the reactor coolant, hydrogen combines with the oxygen that is produced from the radiolytic decomposition of water. Reducing oxygen concentration in the recirculation system drops the electrochemical potential of the stainless steel recirculation piping to a level which arrests the growth of IGSCC and prevents initiation of new IGSCC. A general discussion of the HWC control program is contained in Section 5.2.3.2.1.

The HWC system consists of a hydrogen injection system for adding hydrogen to the condensate system and an oxygen injection system for controlling excess hydrogen in the off-gas stream. The following subsections address the HWC system. The hydrogen water chemistry verification system is addressed in Section 5.2.3.2.1.

5.4.3.1 Hydrogen Injection System

5.4.3.1.1 Design Basis

The hydrogen injection system piping was fabricated, installed, and tested in accordance with ANSI B31.1, 1967 Edition. Storage containers were designed, constructed, and tested in accordance with the appropriate requirements of ASME Section VIII.

5.4.3.1.2 Description

The hydrogen injection system is shown in Drawing M-3658, Sheet 1 and Drawing M-3670 Sheet 3.

A 20,000 gallon cryogenic tank is used to store liquid hydrogen. The tank consists of an inner vessel supported within an outer vessel with insulation provided by the intervening high-vacuum space. Vaporization of the liquid hydrogen is achieved by the use of ambient air vaporizers. A hydrogen injection line is routed from the liquid hydrogen storage tank to the condensate system. The hydrogen is injected into the suction of the condensate booster pumps.

Injection rate is controlled by Dresden Operating Procedures and is commensurate with industry practice.

5.4.3.1.3 Feedwater Oxygen Injection

To maintain the Feedwater dissolved oxygen concentration within specifications, Oxygen may be injected into the Feedwater through the Turbine Sample Panel Drainline. This evolution is procedurally controlled under a Dresden Chemistry Procedure which provides for the controlled addition of small amounts of oxygen via the drain panel as needed to maintain the Feedwater Oxygen Concentration within procedural specification.

5.4.3.2 Off Gas Oxygen Injection System

5.4.3.2.1 Design Basis

The oxygen injection system is designed to add oxygen to the off-gas system to ensure that the excess hydrogen in the off-gas stream is recombined so as to prevent a fire in the charcoal adsorbers due to a combustible mixture of hydrogen and oxygen.

The inner vessel of the liquid oxygen tank (see Section 5.4.3.2.2) is designed, fabricated, tested, and stamped in accordance with ASME Section VIII, Division 1. The outer vessel is constructed of carbon steel and does not require ASME certification.

The oxygen injection piping (see Section 5.4.3.2.2) is fabricated, installed, and tested in accordance with ANSI B31.1.

5.4.3.2.2 Description

The oxygen injection system is shown in Drawing M-3658, Sheet 2.

A 11,000-gallon cryogenic tank is used to store liquid oxygen. The tank consists of an inner vessel supported within an outer vessel with insulation provided by the intervening high-vacuum space. Vaporization of the liquid oxygen is achieved by the use of ambient air vaporizers. An oxygen injection line is routed from the liquid oxygen storage tank to the off-gas system. The oxygen injection line is equipped with an oxygen flow control station. Oxygen is injected upstream of the first stage steam jet air ejector on Unit 2 and downstream of the Booster Steam Jet Air Ejector on Unit 3.

5.4.3.3 Control and Instrumentation

The hydrogen injection and oxygen injection systems are controlled from a main control panel in the control room. There are local controls for shutdown of the systems.

One hydrogen injection valve in the hydrogen injection line to each condensate booster pump allows hydrogen injection to that pump when the following conditions are met:

A. The condensate booster pump is running and

B. All conditions are satisfied for operation of the system.

The recombiner bed temperature is indicated on the recombiner temperature recorder. A high temperature recorded in this panel recorder may be an indication of excess hydrogen injection flow.

The excess-flow check valve in the hydrogen and oxygen supply lines will close if flow exceeds the setpoint.

Any one of the following conditions will trip the hydrogen injection system:

A. Area hydrogen concentrations exceed the setpoint as indicated by the environmental explosion meters (hydrogen area monitors);

B. Reactor trip;

C. Low Feedwater flow 10^6 lb/hr or less; or

D. Manual trip at the hydrogen injection control panel.

E. Hydrogen Flow High

F. Oxygen Flow Low

G. Off-gas System Trip

H. Lo-Lo Oxygen Concentration downstream of the Off-gas recombiner

I. Hi-Hi Oxygen Concentration downstream of the Off-gas recombiner

5.4.3.4 Performance Analysis

The performance/operation of the hydrogen injection system on the Unit 2 Reactor Recirculation Water System is determined by measured levels of dissolved oxygen. These dissolve oxygen levels are obtained from instrumentation located on Loop B of the reactor recirculation system and on the Reactor Water Cleanup filter inlet.

5.4.3.5 Safety Analysis

The HWC system is nonsafety-related. This system will not operate during an accident and is not needed to mitigate the consequences of an accident. Therefore, there are no environmental qualification requirements for the system equipment. However, it is recognized that the equipment should be qualified for hydrogen use and that special precautions should be taken when dealing with the storage, control, and injection of hydrogen gas.

The hydrogen injection system is designed to reduce the potential hazard to safety-related systems. Central storage of hydrogen containers is located outside of the plant buildings so that fire or explosion will not adversely affect any safety-related systems or components. Where hydrogen piping is routed through safety-related areas, excess-flow check valves are provided upstream of these areas to prevent the accumulation of a hydrogen concentration greater than 2% in the event of a line break. In addition, each of the areas containing hydrogen piping is provided with a hydrogen monitor which will annunciate an alarm to alert the operator and will isolate the hydrogen injection system if significant hydrogen concentration in the area is detected.

Without hydrogen addition to the reactor coolant, the bulk of the N^{16} formed from the O^{16} (n, p) reaction is quickly converted to relatively nonvolatile anionic species, primarily NO_2^- and NO_3^-; only a small amount of the N^{16} goes into the steam. With hydrogen addition, the oxidizing potential of the reactor coolant is reduced by oxygen suppression. Thus the proportion of the N^{16} converted to more volatile species such as NH_3, N_2, or NO_2 markedly increases, and the fraction of N^{16} released to the steam rises commensurately. Consequently, higher radiation levels from N^{16} concentrations in the steam will occur in the main steam line when hydrogen is added to the feedwater.

5.4.3.6 Tests and Inspections

The hydrogen piping system was leak tested with helium at 1000 psig.

Testing and inspection of the HWC system are performed in accordance with the requirements of ANSI B31.1. The liquid oxygen storage tank was tested in accordance with ASME Section VIII, Division 1, 1977.

5.4.3.7 Zinc Injection Process System

The zinc injection process (ZIP) system was installed to passively inject depleted zinc oxide to the feedwater to limit and control drywell dose rates. The technique was adapted from the observation that plants with naturally occurring zinc in the reactor water (about 10 ppb) had low shutdown dose rates. Subsequent laboratory tests showed that ionic zinc provided a thinner, more stable corrosion film on stainless steels, thus allowing less incorporation of Co-60. Zinc ions have the additional benefit of lowering the overall Co-60 concentration of the reactor water, as shown in most plants which have observed from 30 -50 % in dose rates on reactor coolant system piping surfaces.

5.4.3.7.1 Design Basis

The ZIP system has been fabricated, installed, and tested in accordance with ANSI B31.1, 1967 Edition. The zinc vessel has been designed, constructed, and tested in accordance with the appropriate requirements of ASME Section VIII.

5.4.3.7.2 Description

The zinc system consists of a skid containing a vessel to hold the zinc oxide and a flow control valve and associated piping and instrumentation to monitor flow. The system will use the feedwater pump discharge to inject the zinc ion into the feedwater system. Two taps are located on the feedwater header to supply water at a pressure above the suction pressure of the feedwater pumps to the ZIP skid inlet nozzle. The return line from the zinc skid has been located on the condensate header so that its injection point will be in the flow stream when any of the three feedwater pumps are in service. Flow control through the zinc skid will be controlled at the zinc skid by using a manual flow control valve and a local flow indicator mounted on the skid.

The zinc skid shall be capable of providing from 4 gpm to 100 gpm through the skid into the feedwater system at the design pressure conditions. Normal flow conditions shall be about 50 gpm, with the 100 gpm reached when the zinc is about to be depleted.

5.4.3.7.3 Performance Analysis

The zinc water chemistry verification will be taken from the reactor water chemistry sample panel.

5.4.4 Main Steam Line Flow Restrictors

5.4.4.1 Design Bases

The performance objective of the steam flow restrictors is to limit the quantity of steam which would be discharged from the reactor vessel in the event of a steam line break.

To achieve the above objective, the design basis of the steam flow restrictors is to limit steam flow through a ruptured steam line to 130% of rated flow for Unit 2 and 145% of rated flow for Unit 3.

Limiting the steam flow in a severed steam line would:

A. Limit the loss of coolant inventory from the reactor vessel;

B. Minimize the amount of moisture carryover before the main steam isolation valves (MSIVs) are closed; and

C. Minimize the probability of forming high-velocity water slugs in the steam line.

5.4.4.2 System Description

The main steam line flow restrictors are simple venturis; one is welded into each steam line between the reactor vessel and the first MSIV. The restrictors have no moving parts and are located as close to the reactor vessel as practical. The restrictors also serve as flow nozzles to provide flow monitoring.

5.4.4.3 Design Evaluation

The accident for which the main steam line flow restrictors are evaluated is the postulated complete severance of a main steam line outside of the primary containment. This event would lead to rapid depressurization and the flow of a

steam-water mixture from the reactor vessel. The steam-water flow would choke in the decreased area of the flow restrictor by a two-phase mechanism similar to critical flow in gas dynamics. This choking would limit the fluid flowrate and, therefore, the rate of reactor coolant blowdown sufficiently to permit closure of the MSIVs before the coolant level in the reactor vessel falls below the top of the reactor core (see Section 15.6).

The restrictors are capable of withstanding the forces produced by saturated steam with a 1300-psi driving head. Downstream of the restrictors, the velocities are reduced and pressure surges are of no consequence. The Unit 2 flow restrictors meet the requirements of ANSI B31.1, as supplemented by the ASME B & PV Code, Section III of 1971. The Unit 3 flow restrictors meet the requirements of ASME Section I and USAS B31.1.

5.4.4.4 Tests and Inspections

Initial differential pressure measurements were obtained over the range of flows expected. Periodic measurements, beyond those required by the plant Technical Specifications, are not required due to the materials of construction of the nozzles and industry experience.

5.4.5 Main Steam Line Isolation System

The main steam line isolation system is described in Sections 6.2.4 and 7.3.2.

5.4.6 Isolation Condenser

5.4.6.1 Design Bases

The performance objective of the isolation condenser is to provide reactor core cooling in the event that the reactor becomes isolated from the turbine and the main condenser by closure of the main steam isolation valves. To achieve this objective, the isolation condenser was designed for a cooling rate of 252.5 x 10^6 Btu/hr.

The isolation condenser system is capable of operation without ac electrical power.

5.4.6.2 Description

The isolation condenser consists of two tube bundles immersed in a large water storage tank. The tubes are Type 304 stainless steel U-tubes. The shell is carbon steel. Drawings M-28 and M-359 show the isolation condenser system for Unit 2 and Unit 3, respectively. The isolation condenser system operates by natural circulation. During isolation condenser system operation, steam flows from the reactor, condenses in the tubes of the heat exchanger, and returns by gravity to the reactor via the A recirculation loop. The differential water head, created when the steam is condensed, serves as the driving force.

The tube side of the isolation condenser system is equipped with high point vent valves which are used during normal operation to prevent the long-term buildup of noncondensible gases. These gases are vented to the main steam line.

The isolation condenser tube sheets were designed to the same code as the reactor vessel, ASME Section III, Class A. Refer to Section 5.2 for a discussion of the reactor coolant pressure boundary requirements for the isolation condenser system.

Makeup water for the isolation condenser can be supplied from several sources. The preferred source is from the clean demineralized water storage tank via two diesel driven isolation condenser makeup water pumps, located in the Isolation Condenser Pumphouse. Alternately, water can be supplied from the clean demineralized water storage tank via two clean demineralized water transfer pumps. If clean demineralized water is unavailable, the fire protection system is the preferred source. The fire protection system has access to an inexhaustible supply of river water supplied either by the service water pumps or the diesel-driven fire pump. When condensate was used as the primary makeup, low levels of radioactive contamination in the condensate tended to concentrate in the isolation condenser shell; under high steaming conditions, carryover would slightly contaminate the area below the isolation condenser vent to atmosphere. Therefore, the least desirable source of makeup water for the isolation condenser is from the contaminated condensate storage tanks via two condensate transfer pumps or the condensate jockey pump. Contaminated water will be used for makeup only if absolutely necessary. Refer to Section 9.2 for a description of the condensate and demineralized water makeup facilities.

If a seismic event were to fail all makeup sources from above-ground tanks and the fire protection system, the Unit 2 DGCW system can supply makeup water through hose connections on the discharge piping of this system. Hose connections on the isolation condenser makeup pump suction piping allow the Unit 2 DGCW system to supply water through two, 4-inch hoses to either the A or B isolation condenser makeup pump. Both the DGCW and isolation condenser makeup piping systems are seismically qualified and will be available following a seismic event. The hoses needed to connect the two systems are stored in an area that can withstand the seismic event. A procedure directs plant workers and operators on how to set up the hoses and operate the systems following the seismic event.

The valves on the steam inlet line to the condenser are normally open; thus the tube bundles are at reactor pressure. Normally, the outboard containment isolation valve for the condensate return line is closed and the inboard valve is open. The isolation condenser is placed in operation by opening the outboard condensate return valve to the reactor system. The isolation condenser is initiated automatically on a sustained high reactor pressure signal as defined in the Technical Specifications. Manual initiation is also possible from the control room. Refer to Section 7.3.4 for a description of the isolation condenser initiation logic.

The outboard steam supply valve and the outboard condensate return are powered by a safety related 250-Vdc bus. Therefore, the outboard condensate return valve can be opened to initiate isolation condenser operation without the availability of ac power. The inboard steam supply and condensate return valves are powered by a 480-Vac electrical bus which can be powered by the emergency diesel generators. These inboard valves are also equipped with a safe shutdown feature; that is, the Unit 2 valves can be powered from Unit 3, and the Unit 3 valves can be powered from Unit 2.

The outboard steam supply valve operator motors were sized to meet the design requirement of full torque capability of 70% of rated dc voltage.

During isolation condenser operation, the water on the shell side of the condenser boils and vents to atmosphere. Two radiation monitors are provided on the shell vent. In the event of excessive radiation levels, the tube side of the heat exchanger can be isolated from the reactor. Refer to Section 11.5 for a description of the radiation monitoring system.

5.4.6.3 Design Evaluation

The major components of the isolation condenser system are designed to meet Class I seismic requirements. These components are the items connected directly to the reactor pressure vessel and include the pipe lines, valves, and condenser, all of which are located in the reactor building. The makeup water supply subsystems of the isolation condenser are designed as Class II items because they are not directly connected to the primary containment and are not necessary for safe shutdown. Should it become necessary to isolate and shutdown the reactor due to a seismic event, the isolation condenser will still be available. No makeup water is required to the isolation condenser for the first 20 minutes.

On loss of offsite power, feedwater to the reactor is lost, causing a reactor scram due to reactor vessel low water level. The water level in the vessel continues to decrease after a scram due to boiloff (caused by decay heat) and subsequent steam flow through either the relief valves or turbine bypass valves. Since water level decreases could ultimately cause the core to be uncovered, the isolation condenser is provided to cool the core without loss of water. This is accomplished by condensing steam generated by core decay heat using the isolation condenser and returning the condensate to the reactor. The isolation condenser operates by natural circulation without the need for power other than the dc power which opens the condensate return valve to initiate system operation.

If the main condenser is unavailable as a heat sink following a reactor scram, decay heat added to the coolant causes reactor pressure to rise, resulting in automatic isolation condenser initiation. The capacity of this system is equivalent to the decay heat rate about 530 seconds (8.83 minutes) after a scram. With no makeup water, the water level in the isolation condenser shell approaches the bottom of the tube bundles in 20 minutes. The decay heat evaluation was based on ANSI/ANS-5.1-1979.

Twenty minutes is a reasonable length of time allowed for initiating makeup water flow to the shell side of the isolation condenser to minimize water losses from the core. Considerably more time is available before the core begins to uncover. The mass of water above the core is sufficient to remove decay heat via the relief valves for another 20 minutes.

During the first 530 seconds (8.83 minutes) following a reactor scram, the isolation condenser provides sufficient cooling such that only a few thousand pounds of water is lost from the reactor via blowdown through the relief valves.

Makeup water to the isolation condenser can be supplied from several sources. The clean demineralized water system supplies water via the diesel driven isolation condenser makeup water pumps which do not require AC electrical power to operate or via two redundant clean demin water transfer pumps, neither of which is powered from an emergency bus. However, power can be fed to their buses by manual operation, diesel load permitting. Alternate sources of water to the isolation condenser are the fire protection system and the condensate storage system.

The condensate transfer pumps are powered from separate buses and can be supplied by emergency power. The jockey pump is on the same bus as one of the transfer pumps.

The fire protection system supplies water to the isolation condenser via a 4-inch line, drawing from an inexhaustible supply of river water. The fire protection system is normally pressurized by the service water system. All service water pumps can be supplied with emergency power by manual operation limited only by the diesel generator capacity as discussed in Section 8.3. The Unit 2/3 diesel-driven fire pump or the Unit 1 diesel-driven fire pump automatically provide a backup supply of river water to the fire protection system on low system pressure.

Isolation condenser makeup water availability subsequent to a seismic event has been considered. Assuming loss of offsite power as a consequence of the seismic event, the fire protection system would still be available since the diesel-driven fire pump automatically starts if the service water system fails to maintain pressure in the fire protection system header. The fire water makeup isolation valves are powered from a safety related 250-Vdc bus. The condensate transfer pumps and jockey pump require only the closing of one circuit breaker to put emergency diesel ac power to their bus, and the pumps can then be started. It is emphasized that these two supplies are contained in structures designed to meet the Uniform Building code which accounts for earthquake loadings. Futhermore, the types of construction used in these systems generally have a low vulnerability to seismic failure. Hence, it is highly probable that at least one of these supplies would be available. Assuming the loss of off-site power is a consequence of any credible event other than a seismic event, the makeup supply from the clean demineralized water storage tank via the diesel driven isolation condenser makeup water pumps would be available.

In the event that makeup supply from the clean demineralized water system is not available, the Class I high pressure coolant injection (HPCI) system in the pressure control mode is the next preferred method to provide core cooling water to the vessel. Fire water as makeup to the isolation condenser is the next, followed by the automatic depressurization, core spray, and LPCI systems. Contaminated demineralized water will be used only if absolutely necessary.

If a seismic event were to fail all makeup sources from above-ground tanks and the fire protection system, the Unit 2 DGCW system can supply makeup water through hose connections on the discharge piping of this system. Hose connections on the isolation condenser makeup pump suction piping allow the Unit 2 DGCW system to supply water through two, 4-inch hoses to either the A or B isolation condenser makeup pump. Both the DGCW and isolation condenser makeup piping systems are seismically qualified and will be available following a seismic event. The hoses needed to connect the two systems are stored in an area that can withstand the seismic event. A procedure directs plant workers and operators on how to set up the hoses and operate the systems following the seismic event.

Leakage of reactor water through the heat exchanger tubes can be detected by the two radiation monitors on the vent to atmosphere and by changes in water level or water temperature in the isolation condenser.

The isolation condenser requires a minimum level of water to meet its design basis heat load prior to makeup. Level indication and level alarms are provided in the main control room. The level indication transmitter, which is located in the vicinity of the isolation condenser level sight glass, is qualified for the expected station blackout temperature profile. The power supply for the level transmitter is supplied from the essential service uninterruptible power supply (UPS).

Leaks and line breaks in the isolation condenser system are detected by differential pressure indication. Unit 2 utilizes elbow taps located in the first elbow of the steam line leaving the reactor vessel and in the condensate return line at the elbow closest to the reactor vessel. Unit 3 utilizes elbow taps located in the first elbow of the steam line leaving the reactor vessel and an annubar flow element in the condensate return line vertical section closest to the reactor vessel. All differential pressure switches for the isolation condenser leak detection logic network are located outside the primary containment. Local temperature detectors are located in all compartments external to the primary containment containing system equipment and piping. The temperature detectors have remote readouts with adjustable setpoints and alarm switches which fail safe in the event of power loss.

The isolation condenser control logic for the inboard and outboard steam inlet and inboard condensate return isolation valves prevents automatic valve opening when the Group V isolation signal is reset. The containment isolation logic for the isolation condenser is described in Section 7.3.2.

The controls for the outboard condensate return isolation valve are designed to reduce the possibility of inadvertent override of an automatic initiation signal, yet permit deliberate remote manual valve closure.

5.4.6.4 Tests and Inspections

The isolation condenser shell was constructed and tested in accordance with ASME Section VIII. It has a joint efficiency of 85%. Spot radiography was performed.

The functional operability of the isolation condenser system was tested at the time of system installation and plant startup. A design heat removal test is also conducted every 5 years. Isolation valve operation can be tested by remote manual actuation from the control room. All automatic devices in the isolation condenser system are tested for proper operation during each scheduled refueling outage. The radiation monitors for the isolation condenser vent to atmosphere are calibrated periodically. Refer to Section 11.5 for a description of the radiation monitoring system.

5.4.7 Reactor Shutdown Cooling System

5.4.7.1 Design Bases

The design objective of the reactor shutdown cooling system (SDCS) is to cool the reactor water when the temperature and pressure in the reactor fall below the point at which the main condenser can no longer be used as a heat sink following reactor shutdown.

Following reactor cooldown using the main condenser, the SDCS is designed for initiation once the reactor water has been cooled to below 350°F. The SDCS is capable of cooling reactor water to 140°F within 24 hours after reactor shutdown and maintaining it at this temperature by removing fission product decay heat from the reactor water. To achieve this objective the system was designed on the following bases:

Design code	ASME Section III, Class C
Design pressure	1250 psig
Design temperature	350°F

Systems that cool the fuel pool can be used as an alternate method of decay heat removal from the reactor cavity during refueling outages. When the fuel pool gates are removed, a natural circulation develops between the reactor cavity and spent fuel pool due to the temperature and density differences between the two bodies of water. To qualify this alternate method of decay heat removal, an analysis is performed prior to the refueling outage to evaluate the heat load in both the reactor vessel and spent fuel pool that will be unique to each refueling outage. The heat load is calculated using the methodology described in ASB 9-2. From the heat load, the required number of fuel pool cooing (FPC) system trains and SDC loops aligned to fuel pool cooling (fuel pool assist (FPA) are determined. It may be necessary to route a portion of the cooling flow directly to the refueling cavity instead of the fuel pool. Conservative values for the service water temperature and reactor building closed cooling water (RBCCW) are determined based on the time of the year during which the refueling outage occurs. This analysis demonstrates that the temperature of the water in the reactor cavity will not exceed administrative limits if specified FPC and SDC-FPA system outlet temperatures and flowrates are maintained. Requirements for fuel pool cooling as described in UFSAR Section 9.1.3.1 must also be satisfied. The reactor cavity temperature will not exceed the administrative limit and the fuel pool temperature will not exceed 141°F even if a FPC pump were to fail. Because the Dresden shutdown safety management procedure requires the ability to align a spare loop of SDC to the SFP within eight hours of the loss of the operating SDC loop, the failure of a FPC pump is considered the limiting single failure. Furthermore, analysis is performed to show that no local boiling will occur on the surface of the fuel rods. Administrative controls are procedurally implemented to ensure compliance with the analysis assumptions such as time, flow, and temperature limits.

5.4.7.2 System Design

The SDCS consists of three partial capacity cooling loops, each containing a pump, a heat exchanger, and the necessary valving and instrumentation.

The operational objective of the SDCS is to have sufficient heat removal capacity for a normal shutdown cooling, such that the reactor can be cooled to 140F within 24 hours after shutdown. This operational objective is for economic considerations and has no impact on plant safety. The EPU analysis determined that when using three loops to cooldown, the cooldown time is approximately 12 hours, and that when using one loop to cooldown, the cooldown time is approximately 39 hours, based on limiting plant operating parameters. When the SDCS is initiated after reactor coolant temperature has decreased to less than 350F, only one SDCS loop operating at a reduced flow rate is needed to decrease the temperature of the reactor coolant to 212F. As the reactor coolant temperature decreases further causing the temperature difference across the SDC heat exchanger tubes to become smaller (i.e. temperature difference between the reactor coolant and RBCCW), two SDCS loops operating at design flow rates are needed to further reduce and maintain the reactor coolant temperature.

SDC system design requires the operation of all three loops to perform the designed 24-hour cooling function. Beyond the 24-hour period, system design considers each loop as a redundant loop; that is, any one may be valved off. The loss of one loop while in the shutdown mode will have no effect after the first 24 hours. If the loss of a loop should occur before this time the reactor will still be cooled but not to 140°F in 24 hours. However, plant operating experience has shown that, at only 8 hours after commencement of normal (main condenser) shutdown, when reactor coolant system temperature has decreased to 350°F, and when the SDCS would normally be put into service, only one pump and one heat exchanger (comprising one loop) are necessary for cooldown. Thus, there is substantial excess capacity.

As shown in Drawings M-32 and M-363 or in Figure 5.4-22, the SDCS influent is through motor-operated valves from either reactor recirculation loop. The valves, one from each recirculation loop, are inside containment, are ac-powered, can be supplied from the emergency diesel generators, and are closed until initiation requirements (reactor coolant system temperature less than 350°F) are met and operator action is taken.

The two inlet lines join into one header outside of containment. This header then divides into three separate loops, each with a dc-powered, motor-operated pump inlet isolation valve, a pump, a heat exchanger, and a dc-powered, motor-operated pump outlet isolation valve. Downstream of the outlet isolation valves and still outside containment, the three branches rejoin then divide into two lines, each containing an ac-powered, motor-operated isolation valve. The lines connect to the LPCI injection lines outside containment. The LPCI injection lines then penetrate containment and connect with the reactor recirculation loops. Although the capability exists to permit flow from and to both recirculation loops simultaneously, normally only one loop is selected for such service.

The SDCS cannot be put into service until various interlocks are met. A temperature interlock on all four ac-powered isolation valves prevents them from opening until reactor coolant system temperature has decreased to less than 350°F as measured by the corresponding steam dome pressure that is less than 119.9 PSIG. The ac and dc suction valves automatically isolate the SDCS if steam dome pressure increases above 119.9 PSIG that corresponds to system coolant temperature above 350°F or if a reactor low water level signal is sensed. The steam dome pressure trip may be bypassed when allowed by Technical Specifications. Each pump has interlocks to prevent operation until certain conditions are met. The steam dome pressure is less than 119.9 PSIG (350°F) and pump suction pressure must be greater than 4 psig.

If these conditions are not met, the SDCS pumps cannot be started. The pumps trip on a temperature increase to 350 °F or if suction pressure decreases to less than 4 psig for 7.5 +/- 2.5 seconds. These interlocks prevent pump cavitation. The 7.5 +/- 2.5 second time delay for the low suction pressure trip is necessary to avoid spurious trips of the Shutdown Cooling Pump during starting.

Each SDCS pump and heat exchanger loop is provided with a minimum flow valve to return pump discharge flow to the pump suction. Thus, even if the downstream valve were closed while the pump was running, the pump would be protected from overheating.

Power to the ac isolation valves and to the pumps can be supplied from the emergency diesel generators. Power to the three branch suction isolation valves and the branch discharge isolation valves is obtained from safety related 250-Vdc buses. The diversity of power supplies to active components can assure system isolation to protect equipment from overheating.

The vertically mounted centrifugal SDCS pumps with mechanical seals are designed to deliver 6750 gal/min each at total developed head of 225 feet.

The SDCS heat exchangers are cooled by water from the reactor building closed cooling water (RBCCW) system and are each designed to remove 27 x 10^6 Btu/hr. The removable U-tube heat exchangers are designed for horizontal mounting.

The SDCS is also used to help cool the fuel pool during refueling outages and to heat reactor water with steam from the heating boiler during startup from cold shutdown. When used to augment fuel pool cooling, only one of the loops is required. The setpoint for the high temperature alarm of this loop is lowered to alert an operator of a loss of spent fuel pool cooling capacity.

The heatup of the drywell during a postulated loss of coolant accident could, in turn, heatup volume of liquid trapped between the inboard and outboard containment isolation valves of the SDCS. Heatup of this trapped volume could overpressurize and fail the associated piping, creating a bypass path for the primary containment. The effect of this thermal pressurization has been analyzed using Appendix F of Section III of the ASME B&PV Code, 1977 Edition through S'77 Addenda. The results demonstrate that the stresses remain within Appendix F allowables. Therefore, the pressure boundary integrity of primary containment is maintained.

All components in the shutdown cooling system are located in a common concrete shielded compartment designed to attenuate radiation levels to 5 mrem/hr outside the compartment.

5.4.7.3 Performance Evaluation

Since the shutdown cooling system is designed for reactor design pressure, the reactor vessel code safety valves provide adequate overpressure protection. Pump permissive instrumentation will prevent the pumps from operating unless the suction pressure is above 4 psig and the reactor water temperature below 350°F.

Area temperature detectors are installed at appropriate locations to initiate an alarm in the control room in case of a line break.

Samples may be taken and analyzed for tube leaks from a sample point on the outlet side of the cooling water from the heat exchanger.

5.4.7.4 Tests and Inspections

The tube side of the SDCS heat exchangers was constructed and tested in accordance with ASME Section III, Class C. The shell side of the heat exchangers was constructed and tested in accordance with ASME Section VIII. The shell joint efficiency is 85% and spot radiography was performed.

Isolation valves are tested periodically to verify operability and leak-tightness.

5.4.8 Reactor Water Cleanup System

5.4.8.1 Design Bases

The design objectives of the reactor water cleanup (RWCU) system are to maintain high reactor water purity to minimize deposition on fuel surfaces; and, to reduce the secondary sources of beta and gamma radiation resulting from the deposition of corrosion products, fission products, and impurities in the primary system. To achieve these objectives, the system is designed as follows:

	Unit 2	Unit 3
Nominal flow capacity	3.25×10^5 lb/hr	6.5×10^5 lb/hr
Design pressure	1250 psig	1250 psig
Vessel Design code	ASME Section VIII, reconciled to Section III, Class C	ASME Section III, Class C

Significant temperature increase may exist between the two feedwater sparger flows while operating at low core power and flow conditions. This temperature difference was determined to be caused in part by RWCU flow being injected into only one of the two feedwater lines. GE SIL 649 identify potential negative effects of plants such as Dresden with high RWCU flow (greater than 1.5% of rated steam flow) that inject RWCU in only one feedwater sparger. For low feedwater flow or low recirculation flow, these RWCU flows introduce a mild asymmetric core inlet enthalpy distribution that can affect the calculated power distribution and thermal limit prediction by Process Computer. GE has performed an evaluation to address the impact of this asymmetric core inlet enthalpy on operating limits on generic basis for Dresden. This evaluation concludes that the asymmetric inlet enthalpy distribution produced by the RWCU injection does not have a substantial impact on thermal margins thus no adjustments to the thermal margins are required (Reference 6). Similarly, Westinghouse has performed a generic evaluation to address the impact of this asymmetric core inlet enthalpy on the operating limits for Dresden and concluded the impact is negligible (Reference 7).

5.4.8.2 System Description

The RWCU system provides a continuous purification of a portion of the recirculation flow with a minimum of heat loss and water loss from the cycle. It can be operated during startup, shutdown, refueling operations, and during normal operation.

As can be seen in Drawings M-30) and M-361 or in Figure 5.4-25, the major components of the RWCU system are the regenerative heat exchangers, non-regenerative heat exchangers, demineralizers, a surge tank, pumps, and necessary control and support equipment.

Water is normally removed at reactor pressure from one of the reactor recirculation loops and from the reactor vessel bottom drain connection, and is routed through a drywell penetration. Containment isolation capability is provided by four motor-operated containment isolation valves; one 8-inch valve with a normally closed, 2-inch bypass valve inside containment, and two 8-inch valves in parallel outside containment. The 2-inch bypass valve provides a means of gradually equalizing pressure around the inboard isolation valve, thereby reducing the possibility of water hammer during system startup. All four valves are required as containment isolation valves.

Downstream of the containment isolation valves the reactor water is cooled in regenerative and non-regenerative heat exchangers. Reactor pressure provides the motive force through the heat exchangers tube side during normal system operation. With low reactor pressure an auxiliary cleanup recirculation pump is used.

On Unit 3, two trains of heat exchangers are arranged in parallel. Each train contains two regenerative and two non-regenerative heat exchangers arranged in series. Each train is rated for a flowrate of 3.25×10^5 lb/hr which is 50% of the system nominal flow capacity. Unit 2 contains a single train of heat exchangers rated for a flowrate of 3.25×10^5 lb/hr which now represents 100% of the system nominal flow. This was performed under modification M12-2-91-018.

The regenerative heat exchangers transfer heat from the water leaving the reactor to the water which returns to the reactor via the feedwater system. The non-regenerative heat exchangers cool the water further to approximately 120°F (140°F maximum) by transferring heat to the RBCCW system. The non-regenerative heat exchangers are capable of maintaining this low temperature and not exceeding a maximum of 140°F even during a blowdown of a portion of the cleanup flow, when effectiveness of the regenerative heat exchangers is reduced.

Downstream of the heat exchangers the reactor water enters a pressure reducing valve (PRV) which controls system pressure downstream to a maximum of 150 psig. The PRV is a stacked disk valve with a design pressure drop of 950 psi in the full open position. Therefore, if the valve failed open, reactor pressure must be greater than 1100 psig before downstream pressure would exceed the 150 psig design pressure for the piping. The downstream piping is further protected against overpressurization by relief valves as described in Section 5.4.8.3.

From the pressure reducing valve, the system flow is routed directly to the cleanup demineralizers, bypassing the cleanup filters which have been abandoned in place on Units 2 and 3. There are three cleanup demineralizers arranged in parallel. Demineralizer effluent flows to the suction of the two cleanup recirculation pumps which raise system pressure sufficiently to return the flow to the reactor.

A surge tank is provided at the suction of the cleanup recirculation pumps to prevent pump trips during small system transients. The tank is sized to provide a water supply to the cleanup recirculation pumps for a minimum of 15 seconds (assuming flow blockage) before the pumps trip. The surge tank is pressurized by nitrogen to maintain suction pressure to the cleanup recirculation pumps.

A bypass line with a motor-operated isolation valve is provided around the cleanup recirculation pumps for low-pressure operation when the cleanup auxiliary pump is providing system flow.

From the suction of the cleanup recirculation pumps, a blowdown line directs the cleanup system flow to a manually controlled blowdown control valve to either the main condenser or radwaste.

The cleanup recirculation pumps provide motive force through the shell side of the recirculation heat exchangers to the feedwater system.

Each cleanup recirculation pump discharges through a motor-operated discharge valve into a common header. Pump minimum flow requirements are assured by minimum flow lines which recirculate a portion of the pump discharge to the surge tank. Flow through the minimum flow lines can be isolated by air-operated valves which are kept open at all times except when the cleanup recirculation pumps are shutdown.

Cleanup system flow then passes through another flow control valve to the shell side of the regenerative heat exchangers where the system water temperature is increased to 440°F while cooling the tube-side water from the reactor. From the regenerative heat exchangers, the demineralized water passes through a motor-operated isolation valve and is returned to the reactor via the feedwater system.

Blowdown is used during hot standby and startup operation to maintain reactor water chemistry and vessel level. It can also be used during normal operation if the RWCU system is not functioning. Blowdown water is normally routed to the condenser, but it can also be transferred to the radwaste system for reprocessing and returned to storage. Replacement water for blowdown is supplied by normal plant makeup.

Three, mixed-bed demineralizers are provided to permit continuous operation. The demineralizers can be operated individually or in parallel. Normal operation consists of operating one demineralizer for each reactor water cleanup recirculating pump in operation. The unused demineralizer(s) will typically be kept in a standby condition; this allows maintenance on standby demineralizers during full flow operation of the system.

Each demineralizer is equipped with instrumentation, in the form of a differential pressure indicating switch, to measure the pressure differential between the inlet and outlet piping. The indicating switches are located at a local panel. In addition to providing local pressure data, the switches will also activate control room annunciators, automatically alerting the control room operators in the event that a high-differential-pressure condition exists.

The resins are sluiced from the demineralizer vessels directly to the spent resin tank in the radwaste disposal system for processing, storage, and eventual offsite disposal.

Y-type post-strainers on the outlet of each of the three demineralizers prevent resins from entering the reactor system in the event of a resin support failure. Each post-strainer is equipped with differential pressure indicating switches, similar to the ones provided for the demineralizers. These indicating switches are also located at a local panel, and also activate control room annunciators, automatically alerting the control room operators in the event that a high-differential-pressure condition exists.

The reactor water cleanup pumps may be operated individually or in parallel. The cleanup pumps are horizontal, electric-motor-driven, multistage, centrifugal pumps with mechanical seals. Each of the cleanup recirculation pumps have a design capacity of 685 gal/min which is approximately 50% of the system nominal flow capacity for Unit 3 (for Unit 2 this flow represents 100% of the system nominal flow capacity as a result of the single train configuration provided in modification M12-2-91-018). If reactor pressure does not provide sufficient suction pressure, an auxiliary pump is used. The design capacity of the single cleanup auxiliary pump is 1310 gal/min for Unit 3. (The Unit 2 auxiliary pump installed under modification M12-2-91-018 has a design capacity of 675 gpm).

The 2-inch bypass line for the inboard containment isolation valve was designed, constructed, and tested in accordance with ANSI B31.1-1980, IEEE 323-1974, IEEE 344-1975, applicable portions of ANSI N45.2, as well as other ANSI and ASTM specifications per Sargent & Lundy Specification K-2202 piping design Table A.

Operation of the cleanup system is controlled from the main control room. Resin sluicing operations are controlled from a local panel.

5.4.8.3 System Evaluation

As shown in Drawings M-48 and M-372, system leakage is monitored by three sets of temperature detectors. The first set of eight area temperature detectors provides a high-temperature alarm and displays area temperature in the control room. These temperature elements cause no automatic plant response except for the control room alarms. Since these elements are resistance temperature devices (RTDs), failure would most likely result in an open circuit or high resistance, which would conservatively actuate a high temperature alarm. These temperature elements are not environmentally qualified.

Unit 2:

Supplementing the originally installed leak detection monitors described above, a second break detection system also exists for the RWCU piping. Two sets of five area RTDs provide a safety-related, environmentally qualified break detection system. Upon indication of an RWCU high energy line break, as detected by area RTDs, an alarm is initiated in the Control Room, and the system is automatically isolated by closing the 1, 1A, 2, and 3 RWCU isolation valves. Additionally, high temperature in the Main Steam Tunnel, as detected by temperature switches, will automatically isolate the RWCU system by closing valves 2-1201-1, 1A, 2 and 3 (Reference 5).

Unit 3:

Supplementing the originally installed leak detection monitors described above, a second break detection system also exists for the RWCU piping. Two sets of five area RTDs provide a safety-related, environmentally qualified break detection system. Upon indication of an RWCU high energy line break, as detected by area RTDs, an alarm is initiated in the Control Room, and the system is automatically isolated by closing the 1, 1A, 2 and 3 RWCU isolation valves. Additionally, high temperature in the Main Steam Tunnel, as detected by the temperature switches, will automatically isolate the RWCU system by closing valves 3-1201-1,.1A, 2, and 3 (Reference 5).

The RWCU system is isolated automatically on a reactor low water level signal. The system is also automatically shutdown and isolated on system low flow, high pressure, or high temperature. An interlocking circuit isolates the RWCU system upon initiation of the standby liquid control system.

The system is provided with relief valves and instrumentation to protect against overpressurization of the equipment and overheating of the resins. A relief valve at the shell side inlet to the regenerative heat exchangers is sized to permit runout of the cleanup recirculation pumps on their performance curves and limit pressure to design pressure of the regenerative heat exchanger shell.

Downstream of the PRV, the low-pressure portion of the cleanup system is protected from overpressure by a 6-inch and a 1-inch relief valve. If the PRV fails fully open, the maximum flow through the valves is 1300 gal/min. The 6-inch relief valve is rated at 1260 gal/min at 150 psig, and the 1-inch relief valve is rated at 40 gal/min at 140 psig. Therefore, adequate relief capacity is provided for full system flow. The 6-inch relief valve is set to open at 160 psig and discharges to the main condenser. The discharge piping of the 6-inch relief valve is equipped with a temperature switch which actuates an alarm in the main control room. The 1-inch relief valve, provided for thermal relief and minor pressure transients, discharges to the reactor building equipment drain tank.

The operator can detect high pressure in the RWCU system by a high-pressure alarm set at 130 psig, or by a high-temperature alarm which monitors the discharge side of the 6-inch relief valve. Both annunciator procedures for these alarms (located in the control room) instruct the operator to check for pressure control valve malfunction. The high-pressure alarm annunciator procedure also indicates that the system should isolate automatically. The operator, therefore, has sufficient information available to isolate the system manually.

Two orifices are located in the line upstream of the mixed-bed demineralizers. Although the piping is 150-pound class, the minor 6% overpressure to the 160-psig setpoint of the 6-inch relief valve will be accommodated by design margin. In addition, timely operator action to reduce primary system pressure will minimize duration of this transient. Therefore, system integrity downstream of the relief valves is not of concern.

The postulated 1300 gal/min discharge is approximately 6% of normal feedwater flow. The feedwater controller can, under normal conditions, handle this flow increase and reestablish reactor level before reaching the scram setpoint. Since the 6-inch relief valve discharge is routed to the main condenser, the coolant inventory will be retained in the steam/feedwater cycle. The increase in feedwater flow will be readily apparent to the operator and, in combination with the relief valve discharge alarm, will provide the operator with ample information to diagnose the pressure control valve malfunction and isolate RWCU manually.

In addition, the diversion of system flow from the secondary side of the regenerative heat exchangers due to relief valve actuation results in the RWCU flow exceeding the 150°F high-temperature setpoint downstream of the heat exchangers. This signal initiates a control room alarm and automatic RWCU system isolation.

Therefore, the RWCU system design provides sufficient relief capacity to assure pressure boundary integrity in case of PRV failure and concurrent interlock failure, in compliance with General Design Criterion 15.

Sample points are provided before and after the RWCU demineralizers to assure the satisfactory performance of equipment. The demineralizer influent sample point is also the source of samples of reactor water during normal operation. A sample point on the cooling water side of the non-regenerative heat exchanger permits analysis for tube leaks.

The heatup of the drywell during a postulated loss of coolant accident could, in turn, heatup the volume of liquid trapped between the containment isolation valves of the RWCU supply line. Heatup of this trapped volume could overpressurize and fail the associated piping, creating a bypass path for the primary containment. The effect of this thermal pressurization has been analyzed using Appendix F of Section III of the ASME B&PV Code, 1977 Edition through S'77 Addenda. The results demonstrate that the stresses remain within Appendix F allowables. Therefore, the pressure boundary integrity of primary containment is maintained.

5.4.8.4 Tests and Inspections

Isolation valves can be tested periodically to verify operability and leak-tightness.

5.4.9 Main Steam Line and Feedwater Piping

5.4.9.1 Description

A diagram of the main steam piping is shown in Drawing M-12 for Unit 2 and in Drawing M-345 for Unit 3. The main steam system is described in Section 10.3. The feedwater piping is described in Section 10.4.7 and shown in Drawings M-14 and M-347.

The materials used in the main steam and feedwater piping comply with the design codes and supplementary requirements described in Sections 3.2 and 10.3. The general requirements of the feedwater system are described in Sections 7.7 and 10.4.

5.4.9.2 Performance Evaluation

Steam flow from the reactor under the assumed accident condition of a ruptured steam line is limited by a flow restrictor in each of four main steam lines. Refer to Section 5.4.4 for a description of the main steam line flow restrictors.

5.4.9.3 Inspection and Testing

Inservice inspection of Class I piping is discussed in Section 5.2.4. Inservice inspection of Class II and III piping is discussed in Section 6.6. Inspection and testing of the main steam and feedwater piping are carried out as described in Sections 10.3 and 10.4.

5.4.10 Pressurizer

This section is not applicable to Dresden Station.

5.4.11 Pressurizer Relief Discharge System

This section is not applicable to Dresden Station.

5.4.12 Valves

This section describes performance objectives and design features of valves within the reactor coolant system and subsystems interfacing with the reactor coolant system. Additional information on containment isolation valves is provided in Section 6.2.4. Specific details of valves utilized at Dresden can be found in the subsection describing the system in which the valves are installed.

5.4.12.1 Design Bases

The criteria for valves are described in Section 3.9. Compliance with ASME Codes is discussed in Sections 3.2 and 3.9. Design bases for containment isolation valves are addressed in Section 6.2.

5.4.12.2 Description

Valves utilized for the nuclear boiler and other systems which may become contaminated have been designed to ensure the integrity of the piping systems and generally conform to the following guidelines:

A. All lines connected to the nuclear boiler, not subjected to nuclear system pressure and temperature during normal operation, should have check and isolation valves or two isolation valves located as close as possible to the nuclear system lines.

B. Valves for non-radioactive systems should be located outside of inaccessible areas.

C. Except for resin outlet transfer valves, no valve should be located in the same room housing the condensate demineralizers or in cells containing cleanup or waste demineralizers or filters.

D. Valves used for high temperature and pressure service, 4 inches and larger in size, should be provided with drains in the valve bonnet, or in the bottom of the valve body, if controlled packing leakoff is desired. An alternate packing scheme may be used in lieu of a valve packing design that requires leakoff.

E. Valves used for high temperature and pressure service, when fully closed and under hydrostatic pressure, should have as a design objective a valve seat leak rate less than 2 cc/hr per inch of diameter across the valve seat.

F. For high temperature and pressure service, check valves should be the swing type. Check valves in resin or slurry transfer lines should be designed to prevent plugging by resins or slurry.

G. Valves should be provided with a back seat to prevent leakage into the gland chamber when the valve is in the fully open position. On motor-operated valves, limit switches should ensure the valve disc does not impact the valve backseat when opening.

H. Valves for drain pots should be sized to pass any sludge accumulated in the drain pot.

I. Valves used to isolate large blocks of equipment within shielded compartments or areas should be provided with stem extensions or reach rods for operation from outside the compartment or area or be furnished with remote actuated operators.

J. Where remote operators are used, the valve should be located in an area readily accessible for maintenance whenever a system is shutdown.

K. The direction of rotation for the opening and closing of all valves should be clearly indicated on the valve handwheels, at access holes in the shielding, or at the location of valve operation.

For motor-operated valves (MOVs), to ensure that the valve open indication and the actual valve position are in agreement, and to provide torque switch open (TSO) bypass circuitry, all safety-related throttle valves have four rotors. Additionally, all safety-related MOVs that are located below the top of active fuel and are the first MOVs in line from the reactor vessel that, if damaged, could drain the reactor vessel, and balance-of-plant throttle valves, also have four rotors.

The four rotor limit switch assembly for all safety-related throttle valves and the first MOV in line from the vessel that could drain the vessel, if damaged, are environmentally qualified.

Safety-related MOVs are being evaluated as part of CECo's response to Generic Letter 89-10. These evaluations are being performed to further demonstrate that sufficient capacity exists to operate the valves within the design pressures and voltages established by the design basis review.

5.4.13 Safety and Relief Valves

Refer to Table 5.1-1 and Section 5.2 for a detailed description of the safety and relief valves.

5.4.13.1 Design Description

Pressure relief valves are designed and constructed in accordance with the same code classes as those of the line valves in the system. Section 3.2 lists the applicable code classes for valves. The design criteria, design loading, and design procedure are described in Section 3.9.

5.4.13.2 Performance Evaluation

Refer to Section 5.2.2 for a detailed evaluation of the reactor vessel safety and relief valves.

5.4.13.3 Tests and Inspections

Refer to Section 5.2.2 for a description of the tests and inspections for the safety and relief valves.

5.4.14 Component Supports

Refer to Section 3.9 for a description of component support design.

5.4.15 Reactor Vessel Head Cooling System

5.4.15.1 Design Bases

The objectives of the reactor vessel head cooling system are to collapse the steam bubble during vessel flooding, to cool the reactor vessel head, and to condense the steam in the vessel while the reactor is in the shutdown mode of operation. To achieve these objectives, the following design bases have been used:

Design flow	170 gal/min
Design pressure of carbon steel piping	1750 psig
Design pressure of stainless steel piping	1250 psig

5.4.15.2 System Design

The reactor vessel head cooling system consists of selected components from the control rod drive (CRD) system, the head spray line and associated valves, and the head spray element.

During a shutdown of long duration, the reactor vessel is usually flooded. Reactor vessel flooding may begin at about 450°F. During cooldown the reactor vessel head and flange are usually hotter than the moderator. Latent heat from the vessel head and flange may cause steam formation with subsequent reactor pressure increase. The head spray system is used to spray cool water into the steam bubble, causing condensation of steam and reduction of pressure and temperature in the head region. It may also be used for cold hydrostatic testing.

The head cooling system (shown schematically in Figure 5.4-28) uses the CRD pumps to deliver condensate to the area inside the vessel head, through the head cooling spray nozzle. Head cooling flow is regulated by a pneumatically controlled valve from 25 to 100 gal/min.

Operation of the reactor vessel head cooling system is controlled from the control room. One or both CRD pumps must be operating and the related manual valve must be open. The condensate flows through the flow control valve and a motor-operated containment isolation valve, to the head spray nozzle, and into the vessel.

Refer to Section 4.6 for a description of the CRD system.

The water line from the CRD pumps to the drywell penetration is a 2½-inch carbon steel pipe. Inside the drywell the pipe is stainless steel.

The normal flowrate to the head spray element is 75 gal/min. The spray element tip is of a fog type. It is made of stainless steel and mounted on a flange from a penetration in the vessel head. The nozzle is offset from the centerline of the head so that the spray does not impinge directly on the interior head surface (see Figure 5.4-29). This reduces the possibility of thermal shock to the head region. The spray is in the shape of a cone with a 70° arc.

Head spray flow indication is displayed as 0-100% of rated flow where 100% corresponds to 200 gal/min.

5.4.15.3 Performance Evaluation

The head spray nozzle maximum flowrate at a pressure drop of 100 psig is 172 gal/min. Therefore, the CRD pump capacity is in excess of the nozzle design maximum flowrate.

Should a Group II isolation signal be received during spraying operations, the motor-operated valve on the head spray line will automatically close.

5.4.16 References

1. "Design and Performance of the General Electric Boiling Water Reactor Jet Pumps," APED-5460, General Electric Company, September 1968.

2. SEP Topic III-1.

3. Deleted

4. Deleted

5. J. Hosmer (ComEd) letter to U.S. NRC dated December 10, 1996, "Reactor Water Clean Up (RWCU) System High Energy Line Break (HELB) Outside the Drywell"

6. "Evaluation of Dresden Asymmetric Reactor Water Cleanup Flow Injection," GE-NE-0000-0036-4343-R0, General Electric Company, August 2005.

7. "Evaluation of Potential Effect of Core Inlet Flow Enthalpy Asymmetry on Fuel Thermal Limits for Dresden," OPTIMA2-TR054 DR-ASYMFWTEMP, Revision 0, October 2006.

Table 5.4-1

REACTOR SYSTEM PERFORMANCE DATA USED TO DEFINE JET PUMP HYDRAULIC BOUNDARY CONDITIONS

Operating Parameter	Reactor Vessel Design Point
Thermal power	2527 MWt
Total core coolant flow	98×10^6 lb/hr
Core pressure drop	20 psi
Core entrance enthalpy	522.3 Btu/lb
Core exit average quality	10.1%
System feedwater temperature	340.1°F
Vessel steam output	9.765×10^6 lb/hr
Core exit pressure	1028 psia
Pressure (steam dome)	1020 psia
Temperature (steam dome)	Saturated

Note: Conditions shown are for 100% power operation. The values given for feedwater temperature and vessel steam output serve as nominal reference values, but are not limits.

Table 5.4-2

JET PUMP SYSTEM DESCRIPTION AND PERFORMANCE PREDICTIONS

Number of drive loops	2
Pipe sizes (nominal OD[1])	
Recirculation pump suction	28 in.
Recirculation pump discharge	28 in.
Ring header[2]	22 in.
Jet pump external feedline	12 in.
System irreversible losses	
Vessel outlet nozzle to vessel inlet nozzle	68 ft.
Vessel inlet nozzle to jet pump 180° bend entrance	13 ft.
Jet pumps	
Quantity	20
Mixing throat diameter (ID[1])	8.1 in.
Drive nozzle diameter (ID[1])	3.31 in.
Diffuser diameter (ID[1])	20 in.
Driving flow per pump	4720 gal/min
Suction flow per pump	8160 gal/min
Flow ratio (M)	1.729
Jet pump head (irreversible pressure gain)	67.6 ft
MN efficiency (includes nozzle in jet pump)	30.8%

Note:
1. OD = outside diameter; ID = inside diameter.
2. Unit 3 equalizer line and valves were removed during the Unit 3 1985-86 recirculation pipe replacement outage.

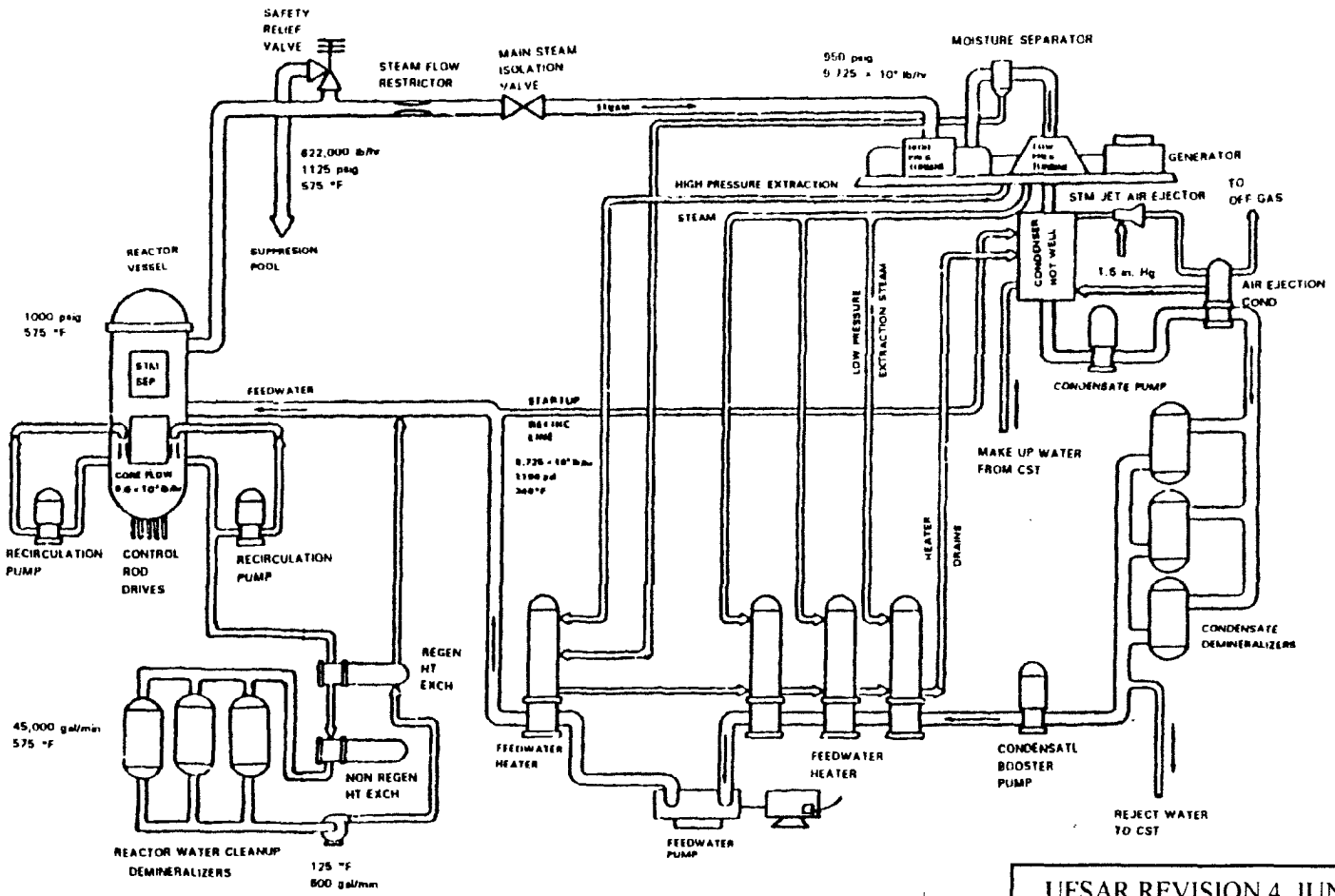

NOTE: CONDITIONS SHOWN ARE FOR 100% POWER OPERATION.
The values given for feedwater/condensate flow, feedwater temperature and mainsteam flow serve as nominal reference values, but are not limits.

UFSAR REVISION 4, JUNE 2001
DRESDEN STATION UNITS 2 & 3
TYPICAL BOILING WATER REACTOR COOLANT SYSTEM
FIGURE 5.1-1

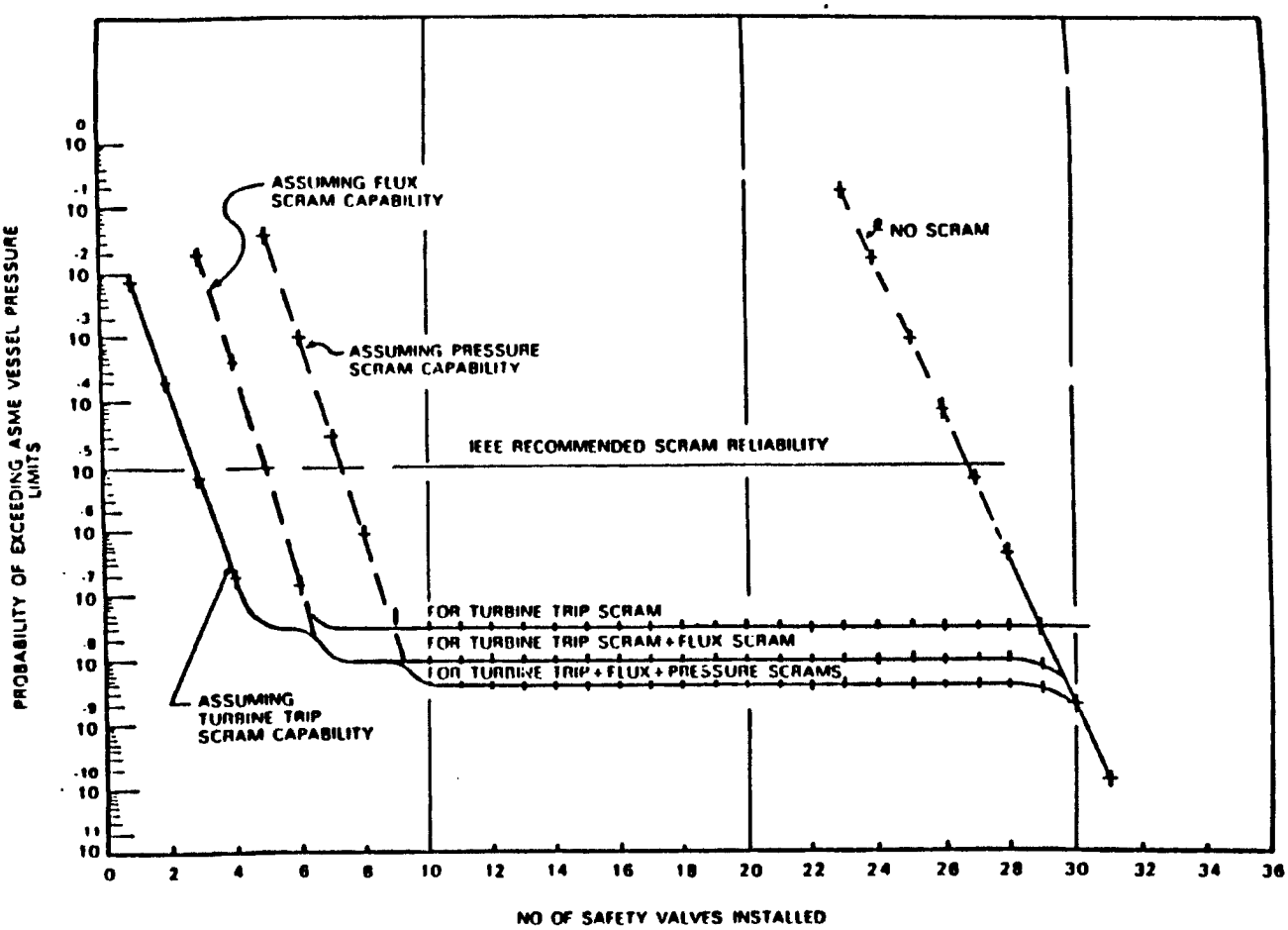

DRESDEN STATION UNITS 2 & 3
RELIABILITY OF VESSEL PRESSURE PROTECTION VS. NUMBER OF SAFETY VALVES INSTALLED (TWO YEAR VALVE TEST SCHEDULE)
FIGURE 5.2-1

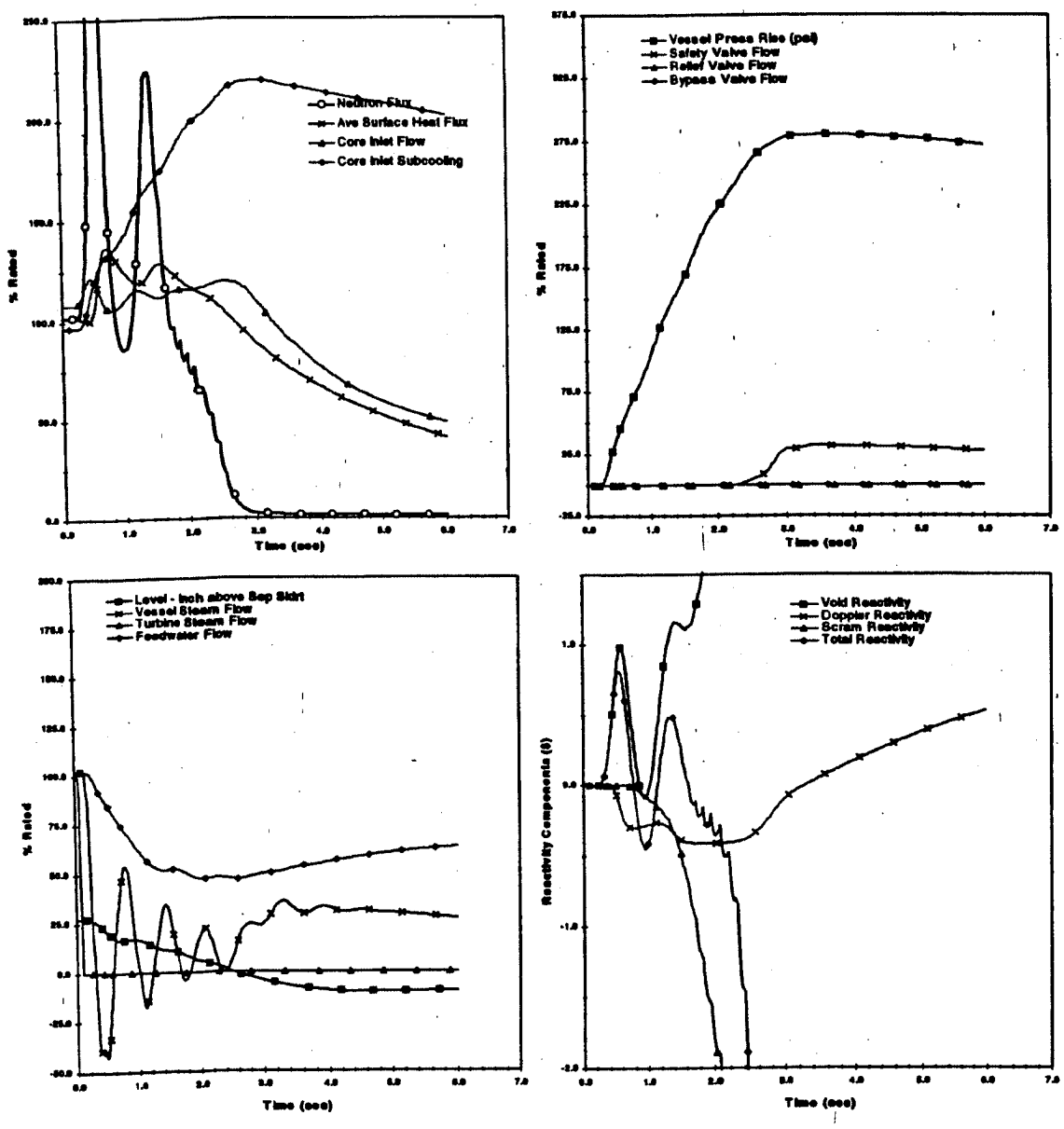

See the discussion in Section 5.2.2.2.2 for information regarding the use of details from this analysis, which may not be applicable to the current fuel load.

DRESDEN STATION UNITS 2 & 3
TURBINE TRIP, NO BYPASS, TRANSIENT ANALYSIS
FIGURE 5.2-2

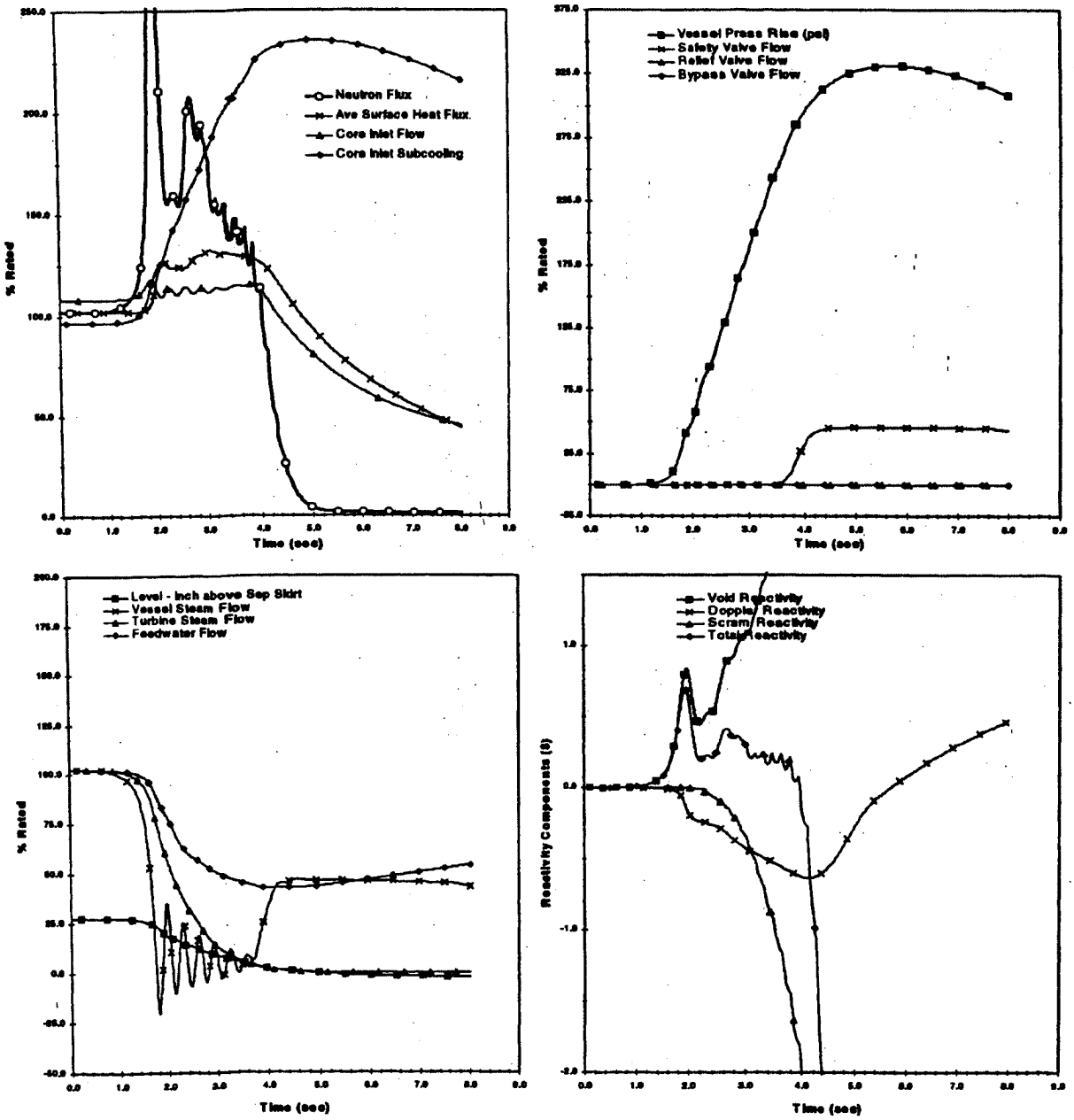

See the discussion in Section 5.2.2.2.3 for information regarding the use of details from this analysis, which may not be applicable to the current fuel load.

DRESDEN STATION UNITS 2 & 3
MSIV CLOSURE, FLUX SCRAM TRANSIENT ANALYSIS
FIGURE 5.2-3

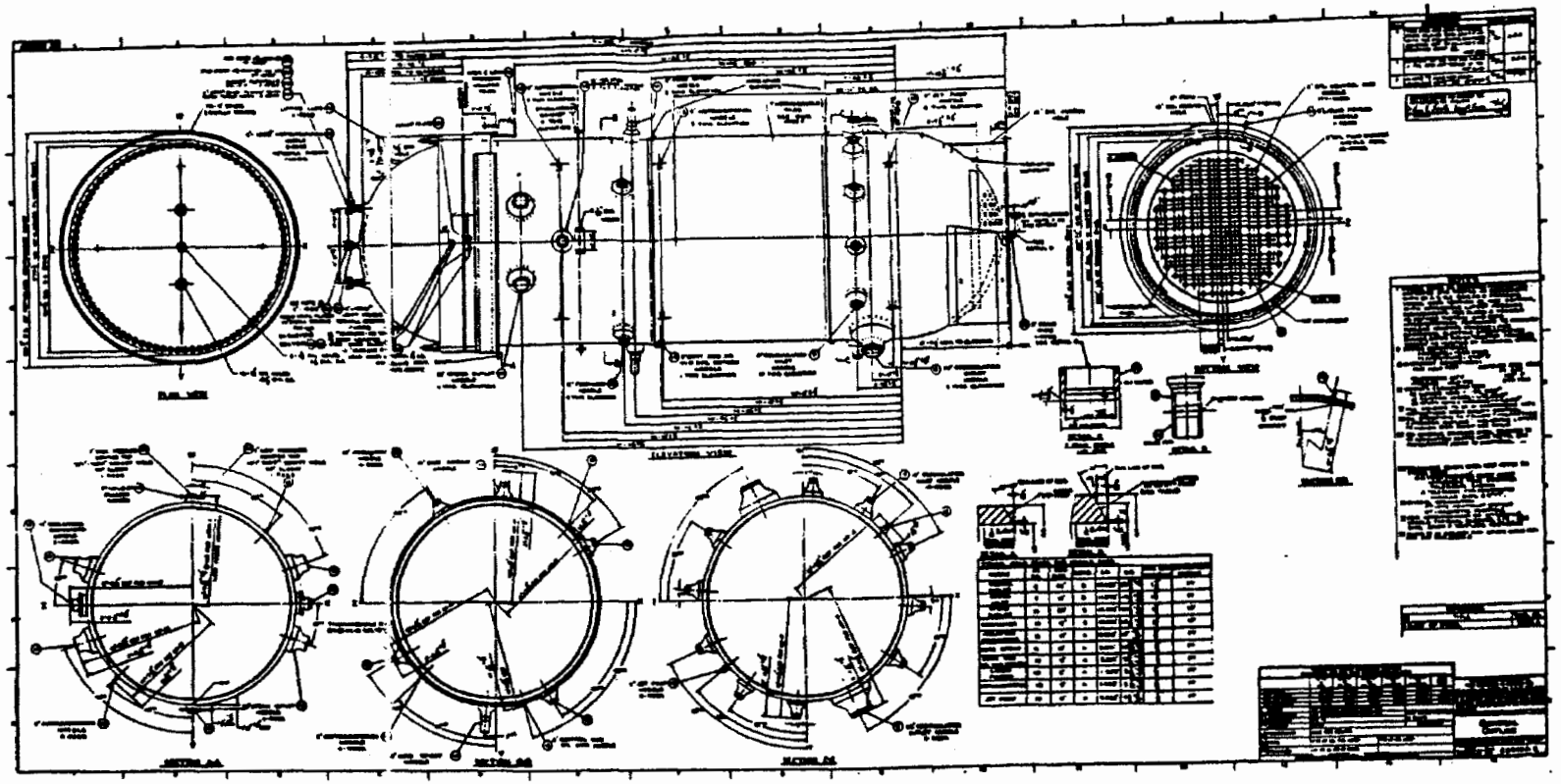

DRESDEN STATION UNITS 2 & 3
REACTOR VESSEL GENERAL OUTLINE
FIGURE 5.3-1

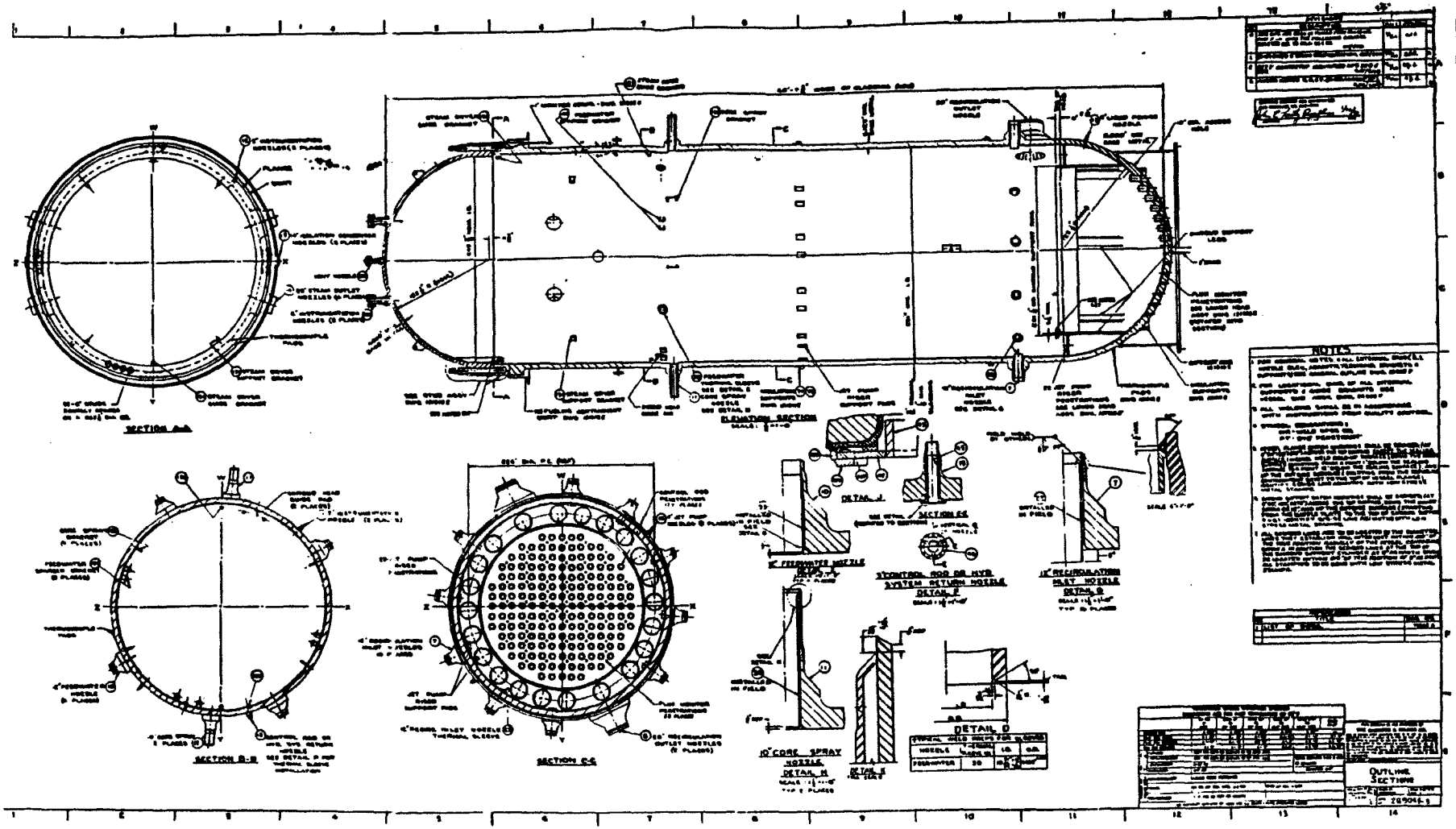

DRESDEN STATION
UNITS 2 & 3

REACTOR VESSEL
INTERIOR OUTLINE SECTIONS

FIGURE 5.3-2

PRESSURE - TEMPERATURE LIMITS FOR PRESSURE TESTING - VALID TO 18 EFPY

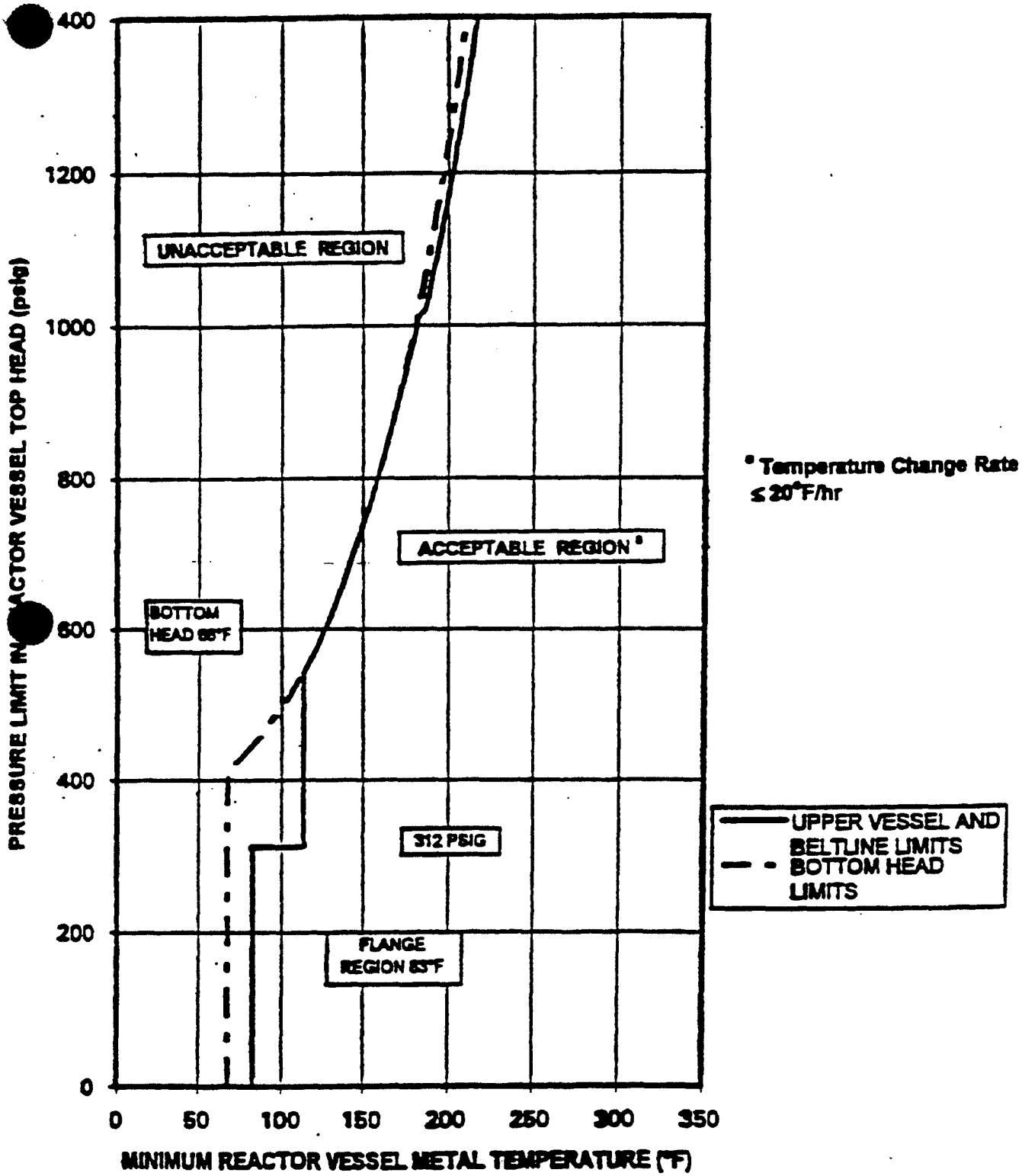

DRESDEN STATION
UNITS 2 & 3
PRESS-TEMP LIMITS FOR PRESSURE TESTING
FIGURE 5.3-3

PRESSURE - TEMPERATURE LIMITS FOR PRESSURE TESTING - VALID TO 20 EFPY

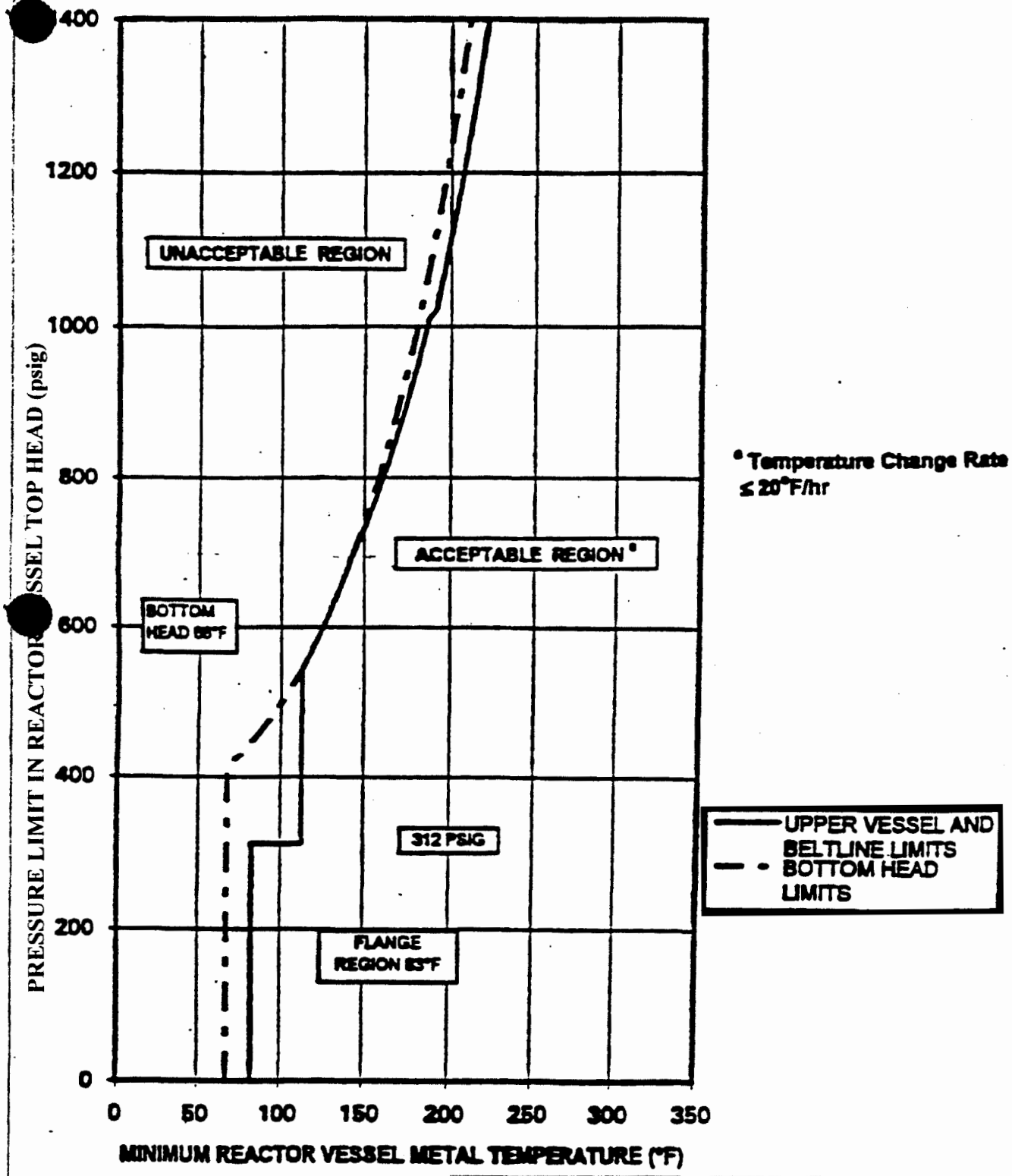

DRESDEN STATION
UNITS 2 & 3
PRESS-TEMP LIMITS FOR PRESSURE TESTING
FIGURE 5.3-4

PRESSURE - TEMPERATURE LIMITS FOR PRESSURE TESTING - VALID TO 22 EFPY

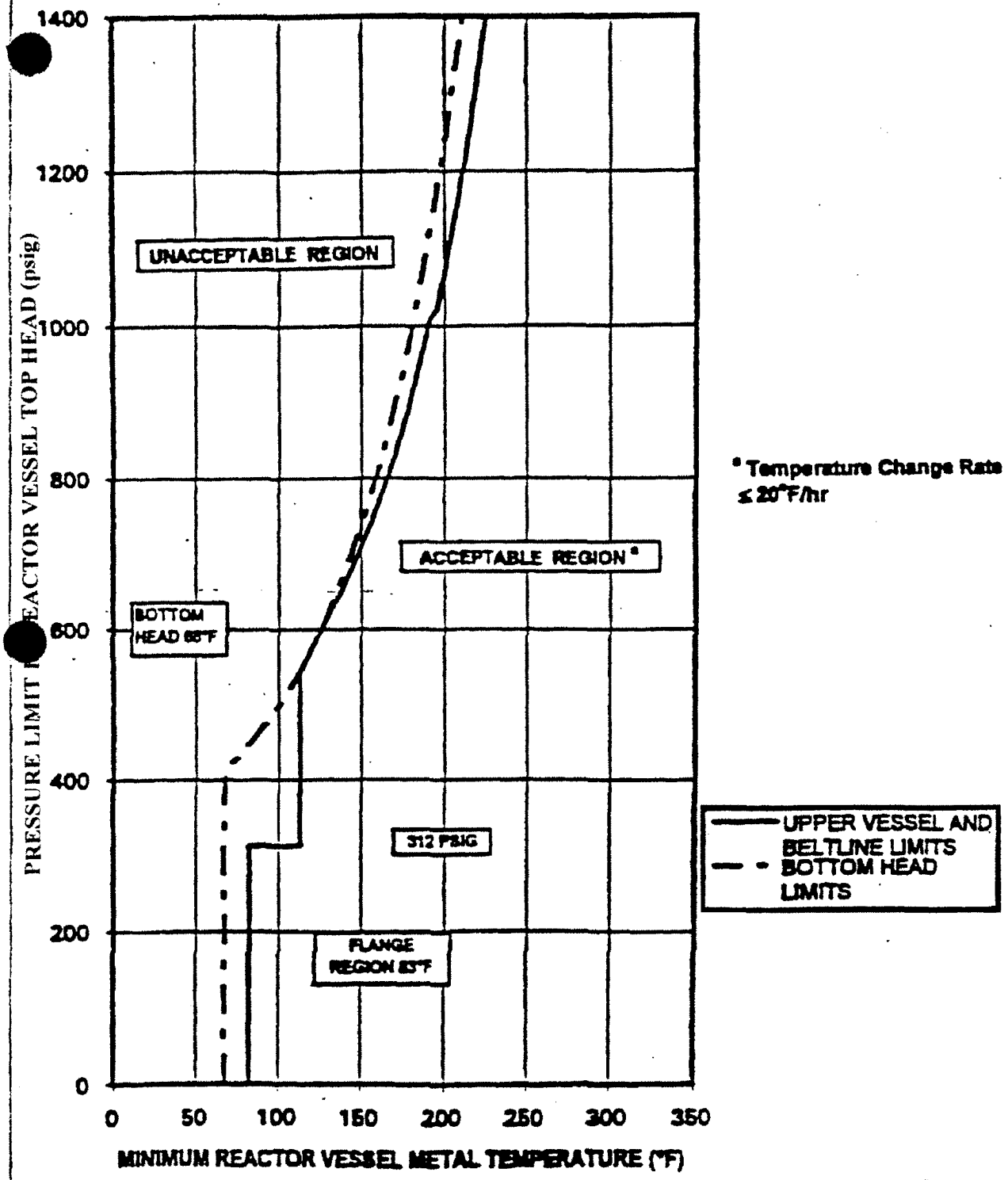

UFSAR REV. 3 JUNE 1999

DRESDEN STATION
UNITS 2 & 3
PRESS-TEMP LIMITS FOR PRESSURE TESTING
FIGURE 5.3-5

PRESSURE - TEMPERATURE LIMITS FOR NON-NUCLEAR HEATUP/COOLDOWN - VALID TO 22 EFPY

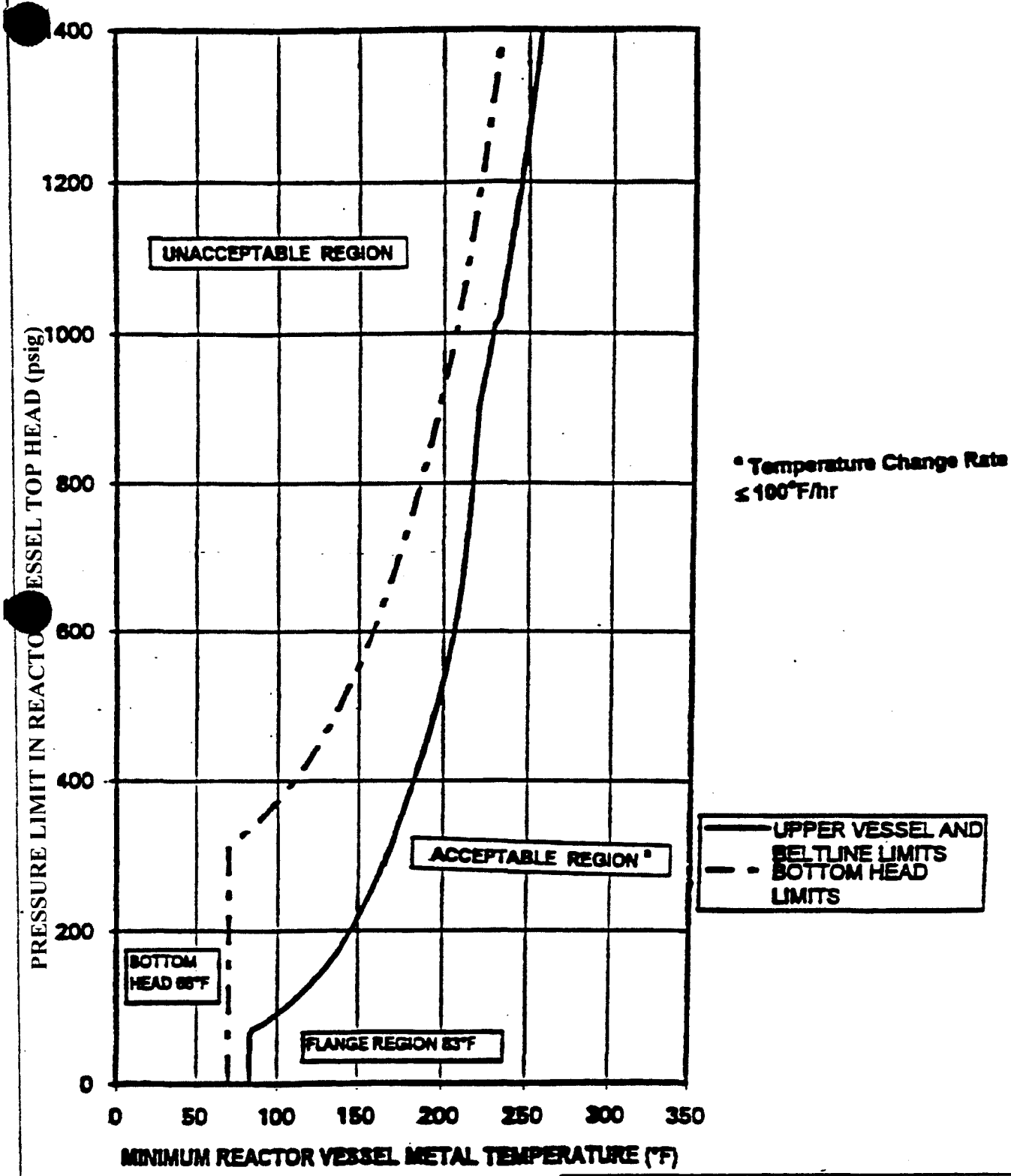

DRESDEN STATION
UNITS 2 & 3
PRESS-TEMP LIMITS FOR NON-NUCLEAR HEATUP/COOLDOWN
FIGURE 5.3-6

PRESSURE - TEMPERATURE LIMITS FOR CRITICAL CORE OPERATIONS - VALID TO 22 EFPY

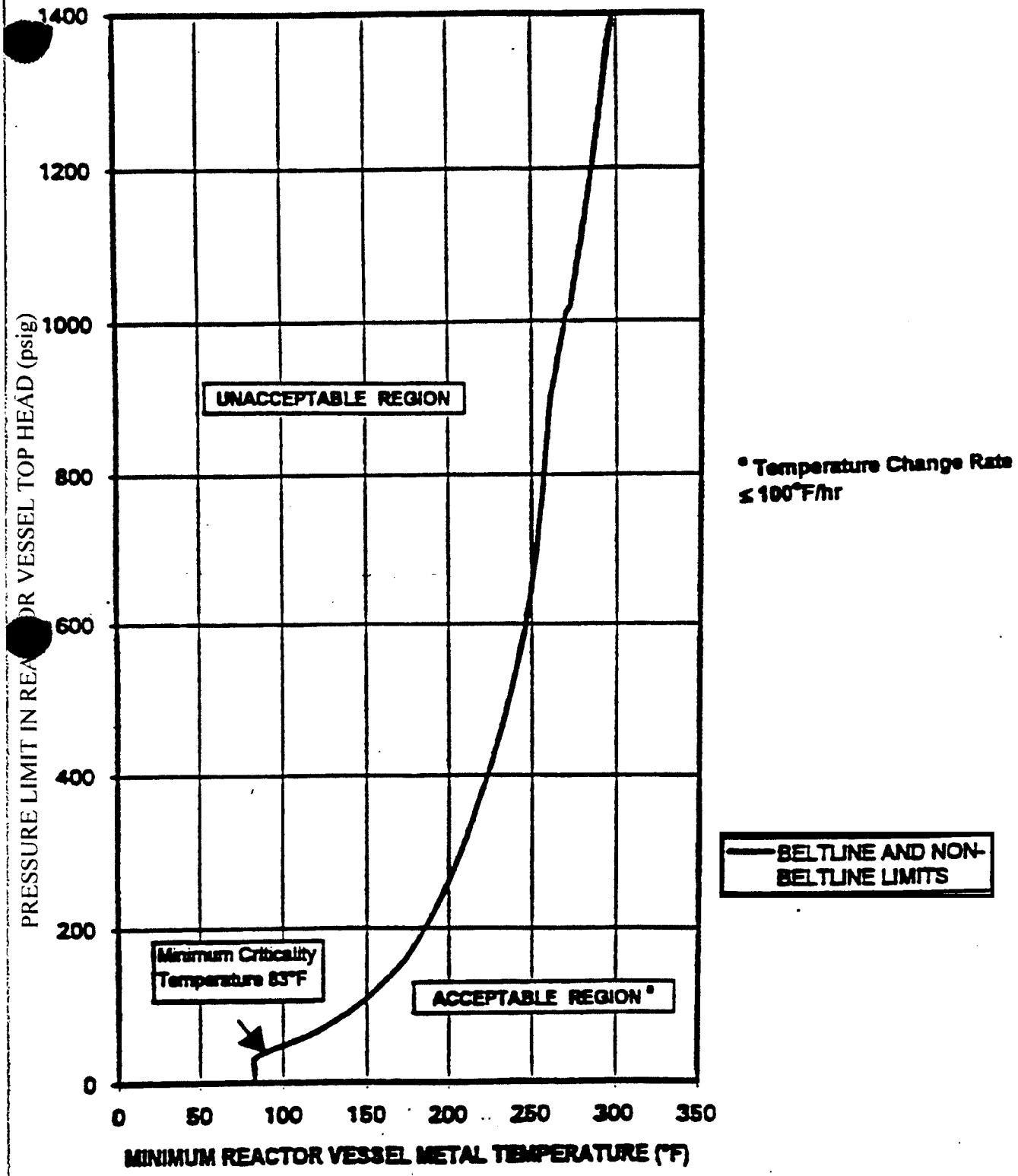

UFSAR REV. 3 JUNE 1999

DRESDEN STATION
UNITS 2 & 3
PRESS-TEMP LIMITS FOR CRITICAL OPERATIONS
FIGURE 5.3-7

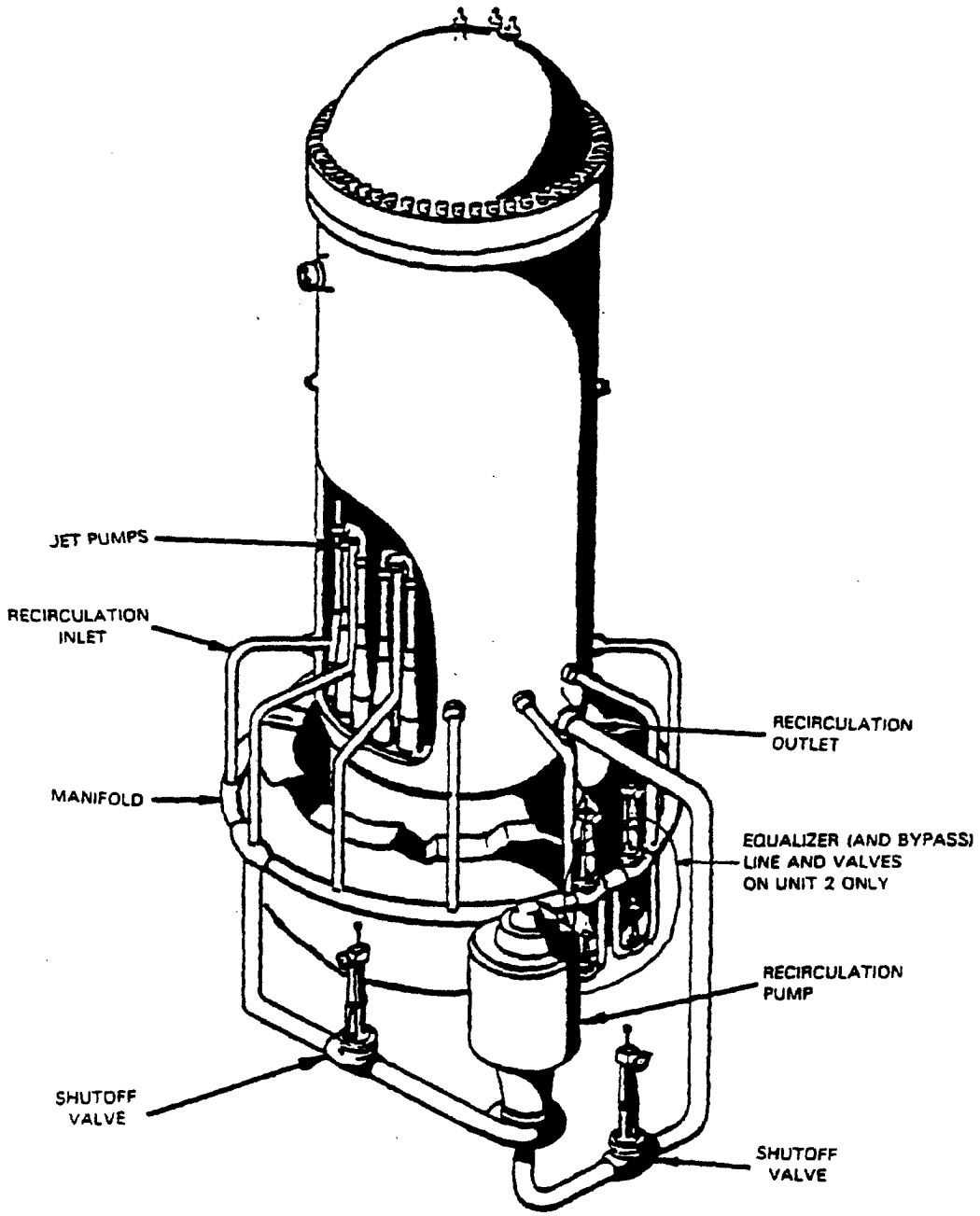

UFSAR REVISION 2, JUNE 1997
DRESDEN STATION UNITS 2 & 3
REACTOR VESSEL ISOMETRIC
FIGURE 5.4-5

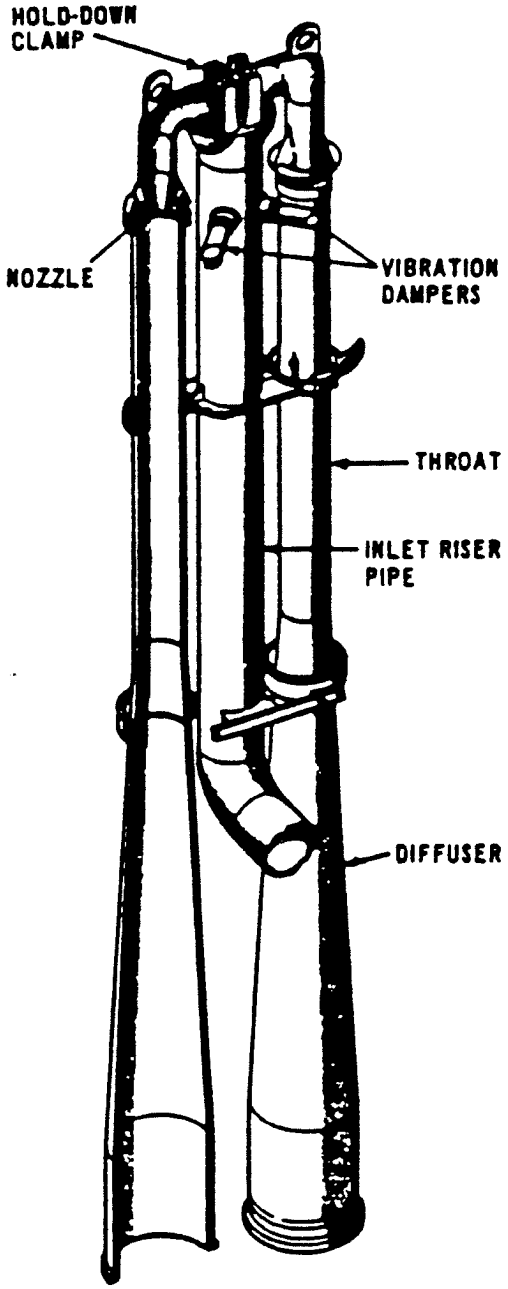

DRESDEN STATION UNITS 2 & 3
JET PUMP ISOMETRIC
FIGURE 5.4-6

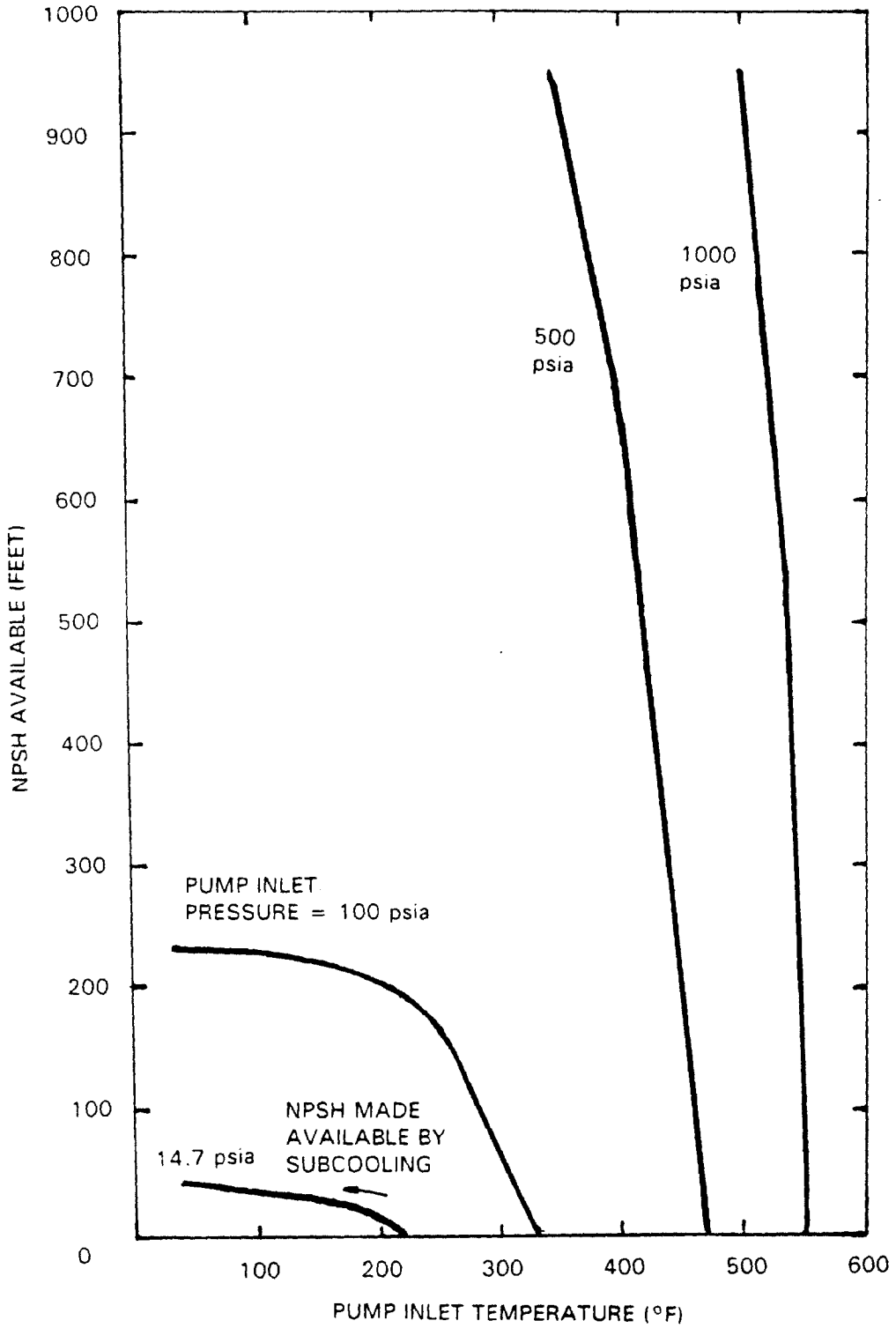

DRESDEN STATION UNITS 2 & 3
NPSH AVAILABLE VS. PUMP INLET TEMPERATURE AT VARIOUS PUMP INLET PRESSURES
FIGURE 5.4-7

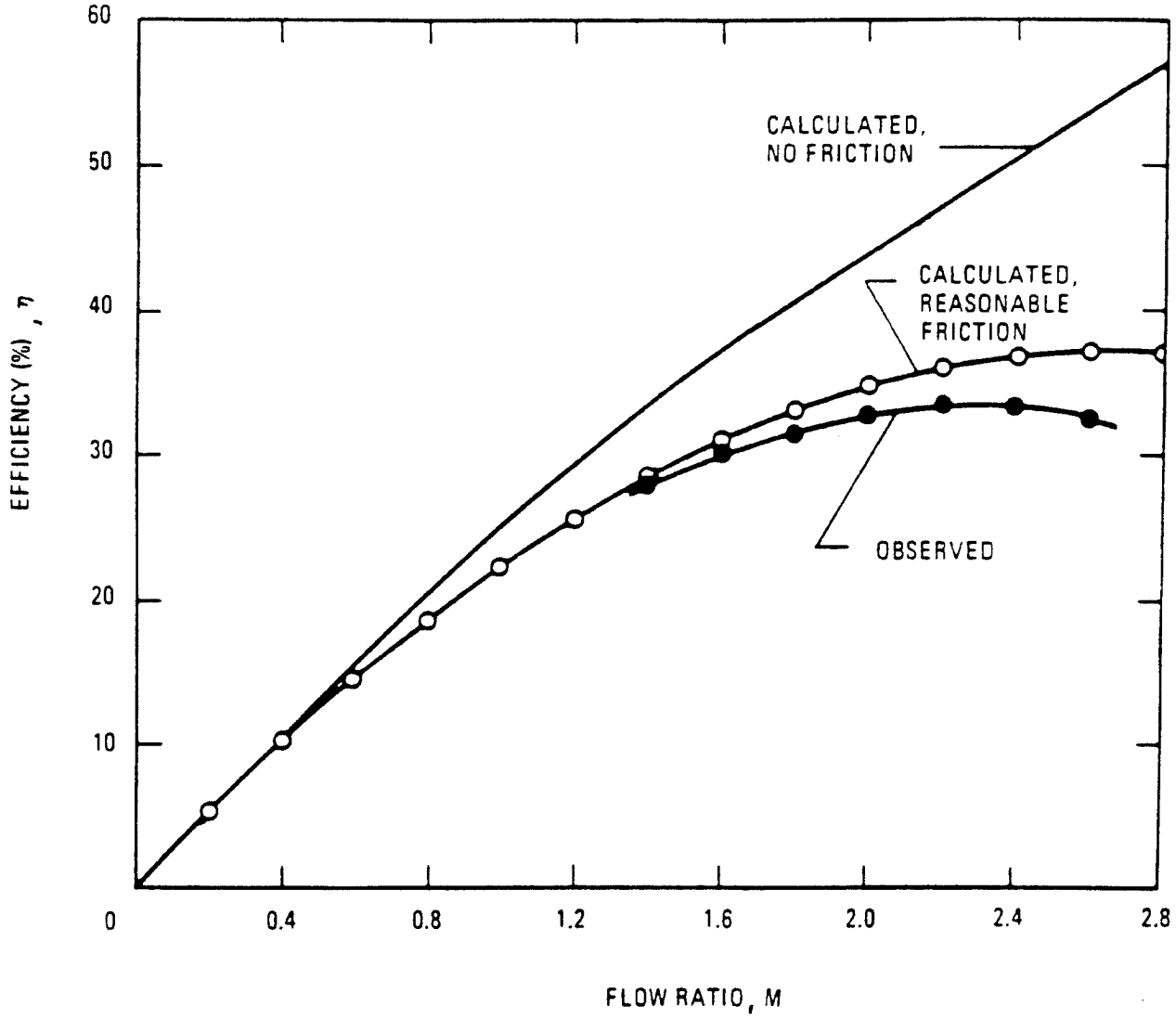

DRESDEN STATION UNITS 2 & 3
JET PUMP EFFICIENCY VS. FLOW RATIO
FIGURE 5.4-8

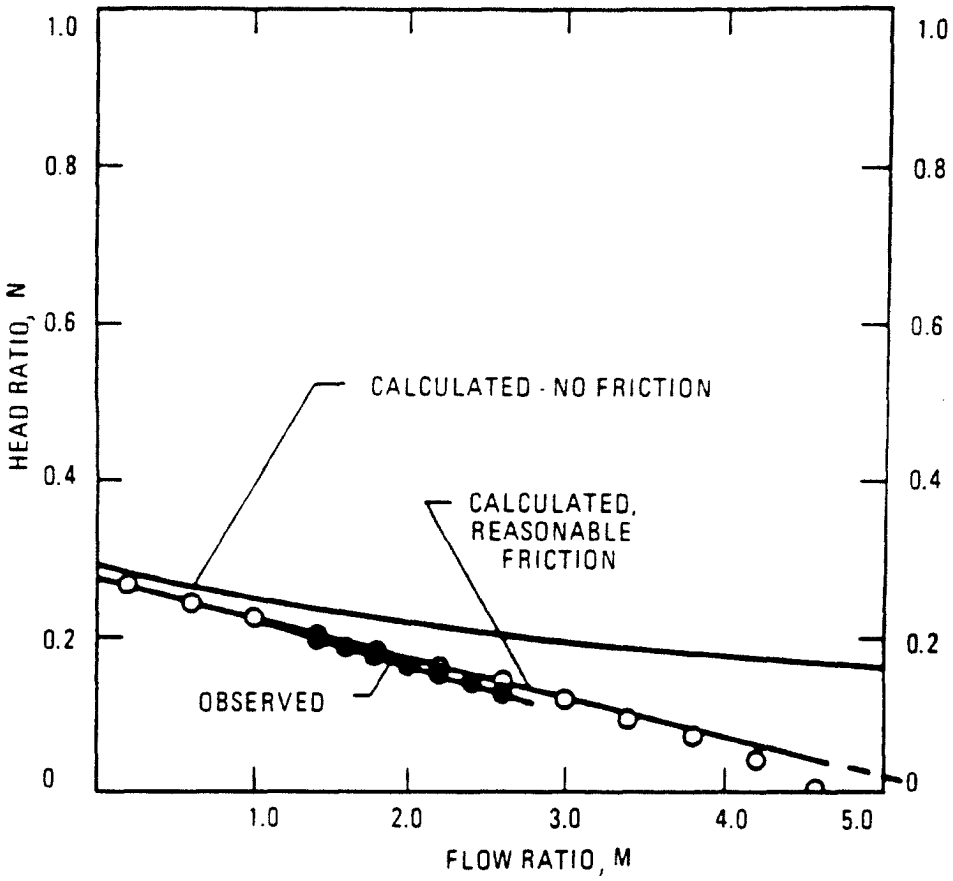

DRESDEN STATION UNITS 2 & 3
JET PUMP CARACTERISTIC CURVE
FIGURE 5.4-9

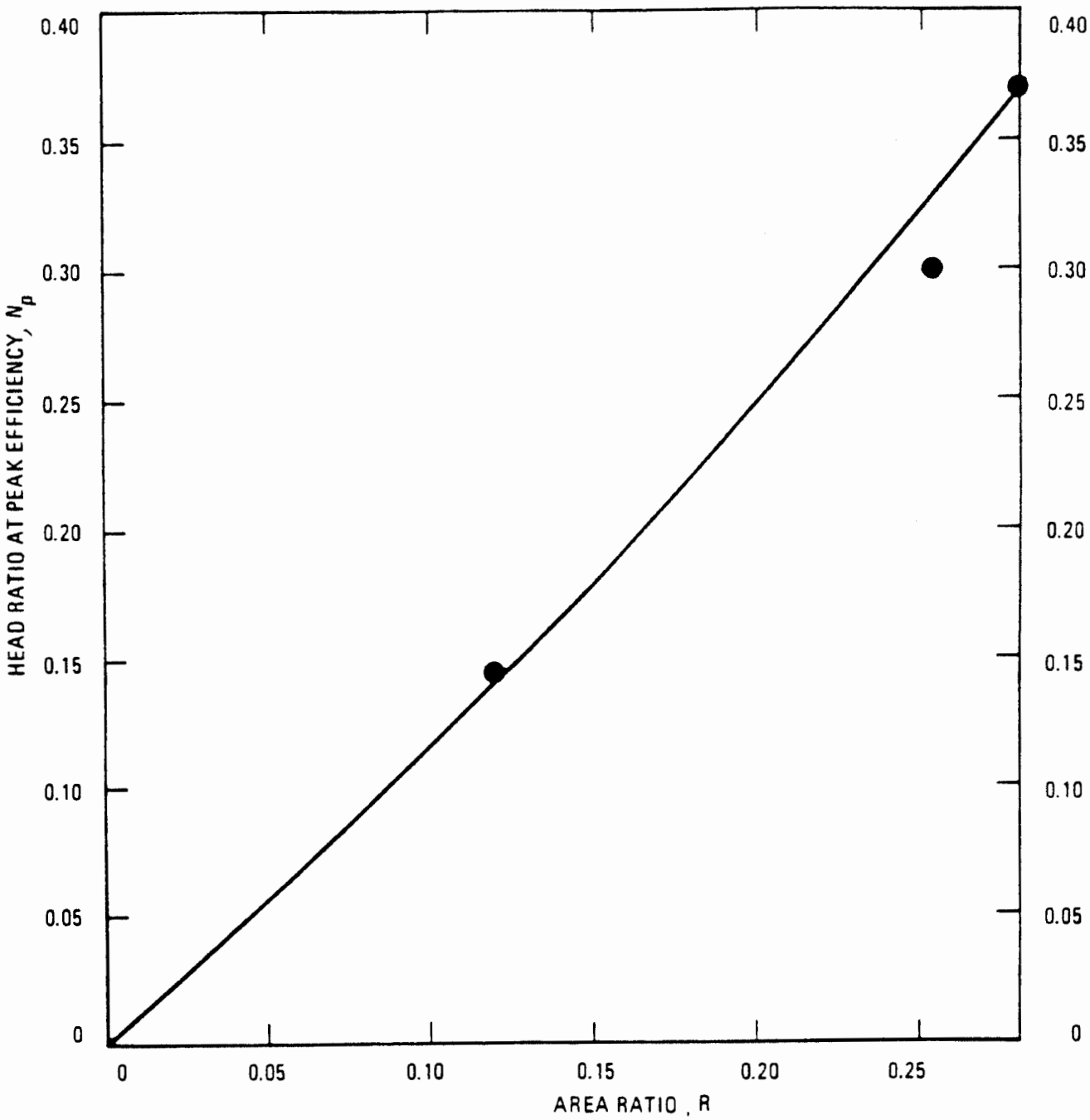

DRESDEN STATION
UNITS 2 & 3

JET PUMP HEAD RATIO VS. AREA RATIO

FIGURE 5.4-10

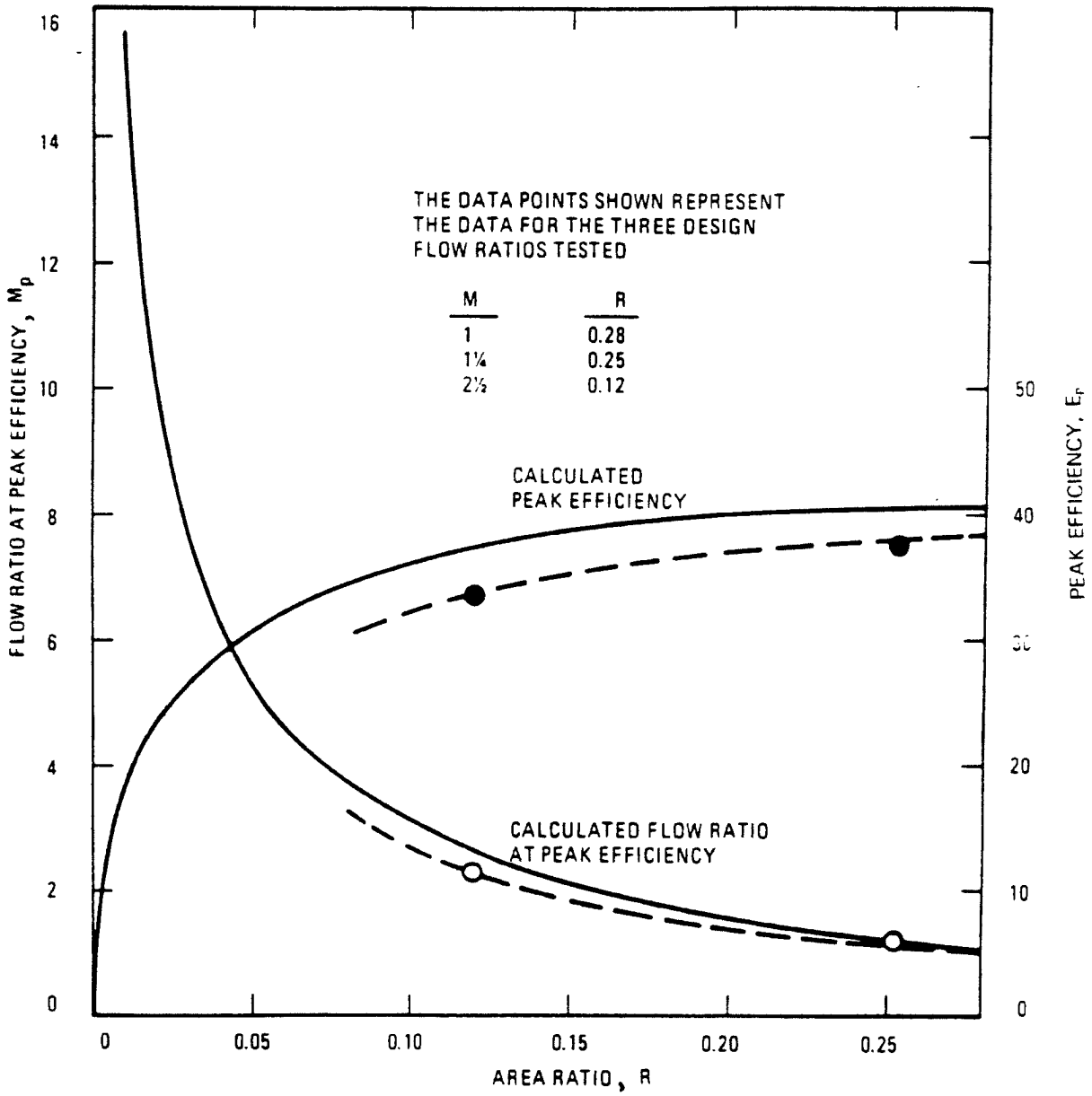

DRESDEN STATION UNITS 2 & 3
JET PUMP FLOW RATIO VS. AREA RATIO
FIGURE 5.4-11

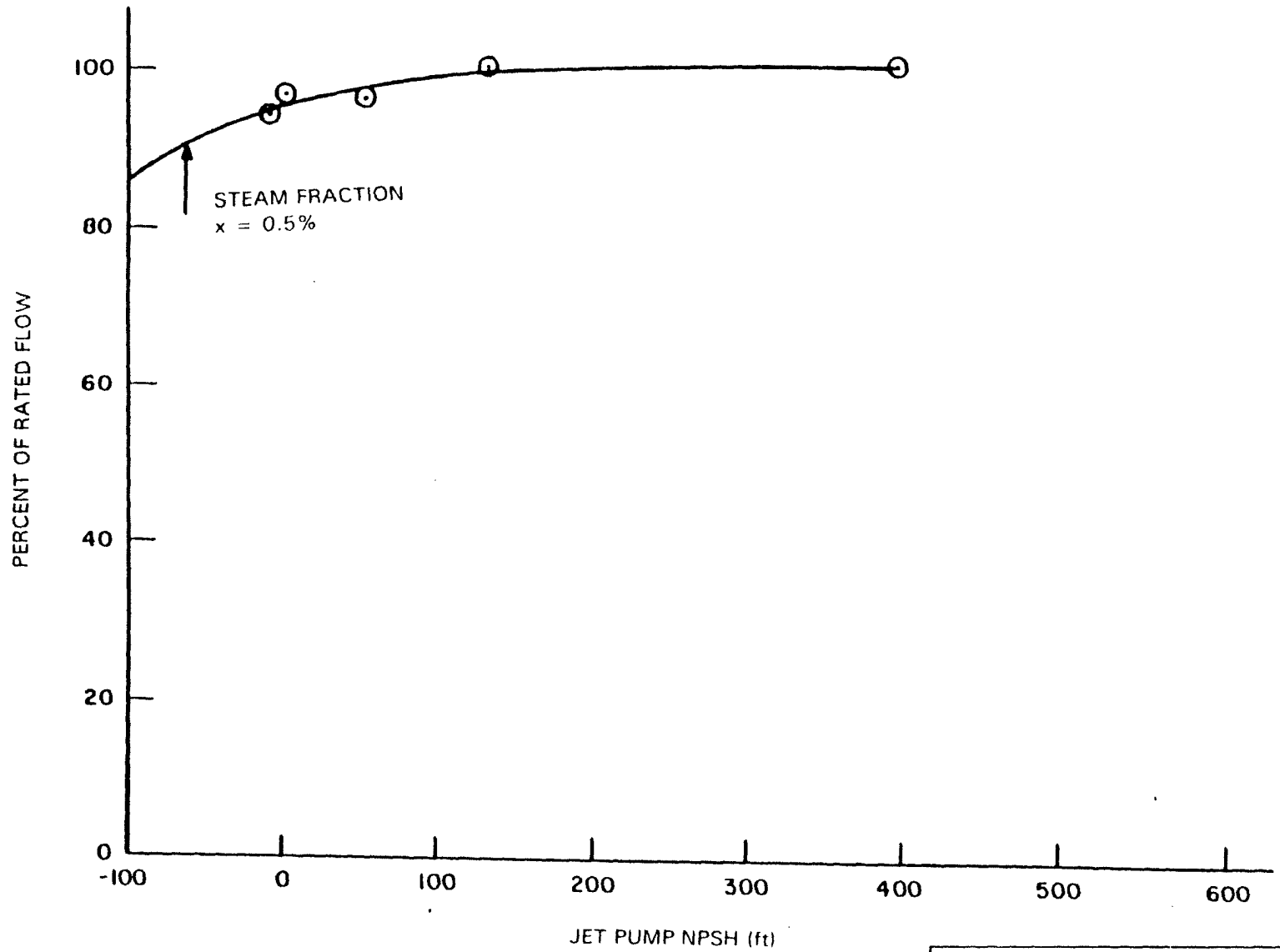

DRESDEN STATION
UNITS 2 & 3

SUBCOOLING EFFECT ON JET PUMP PERFORMANCE

FIGURE 5.4-12

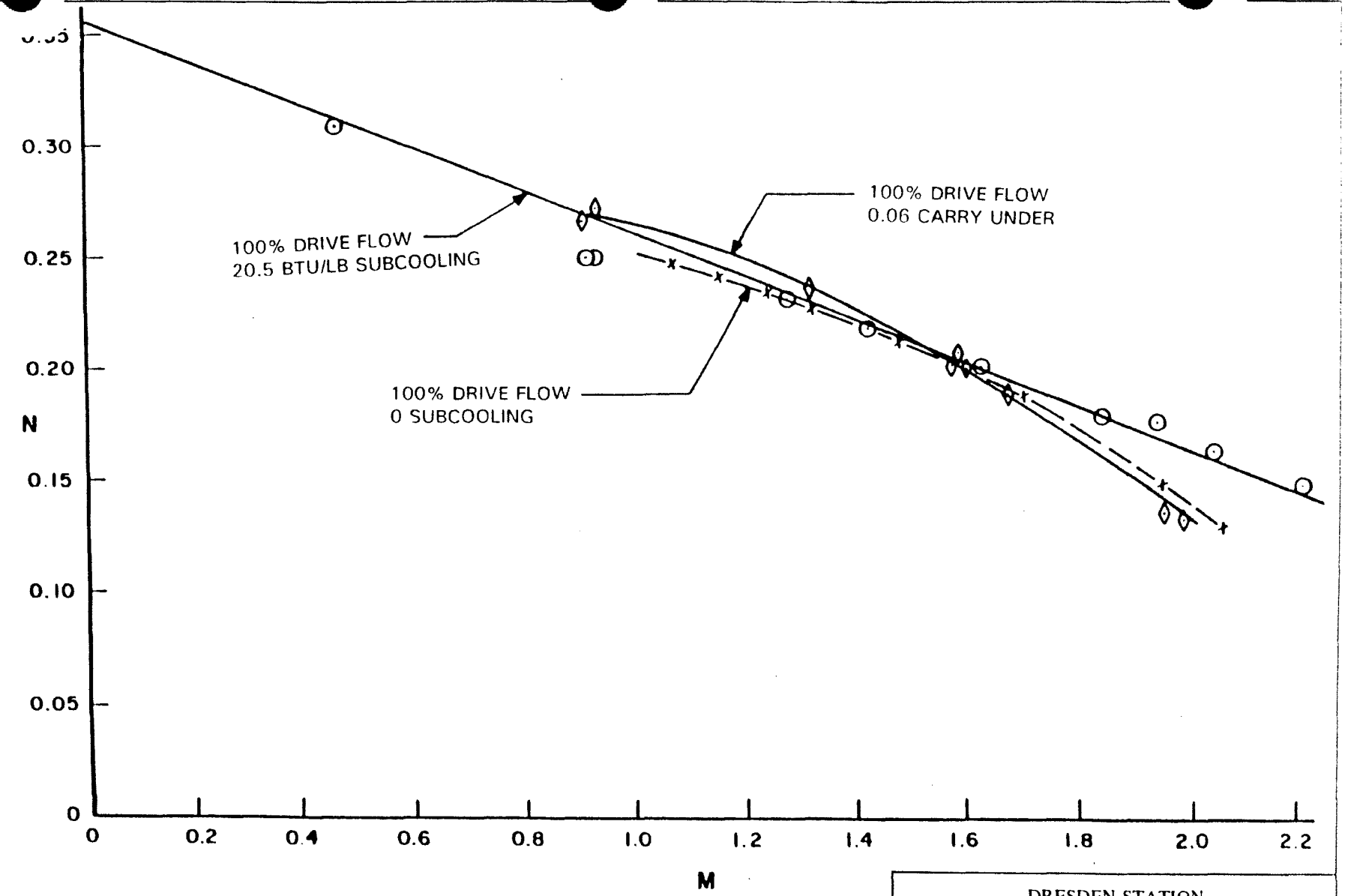

DRESDEN STATION
UNITS 2 & 3

JET PUMP FULL SCALE PERFORMANCE
UNDER CAVITATING ENVIRONMENT
CONDITIONS

FIGURE 5.4-13

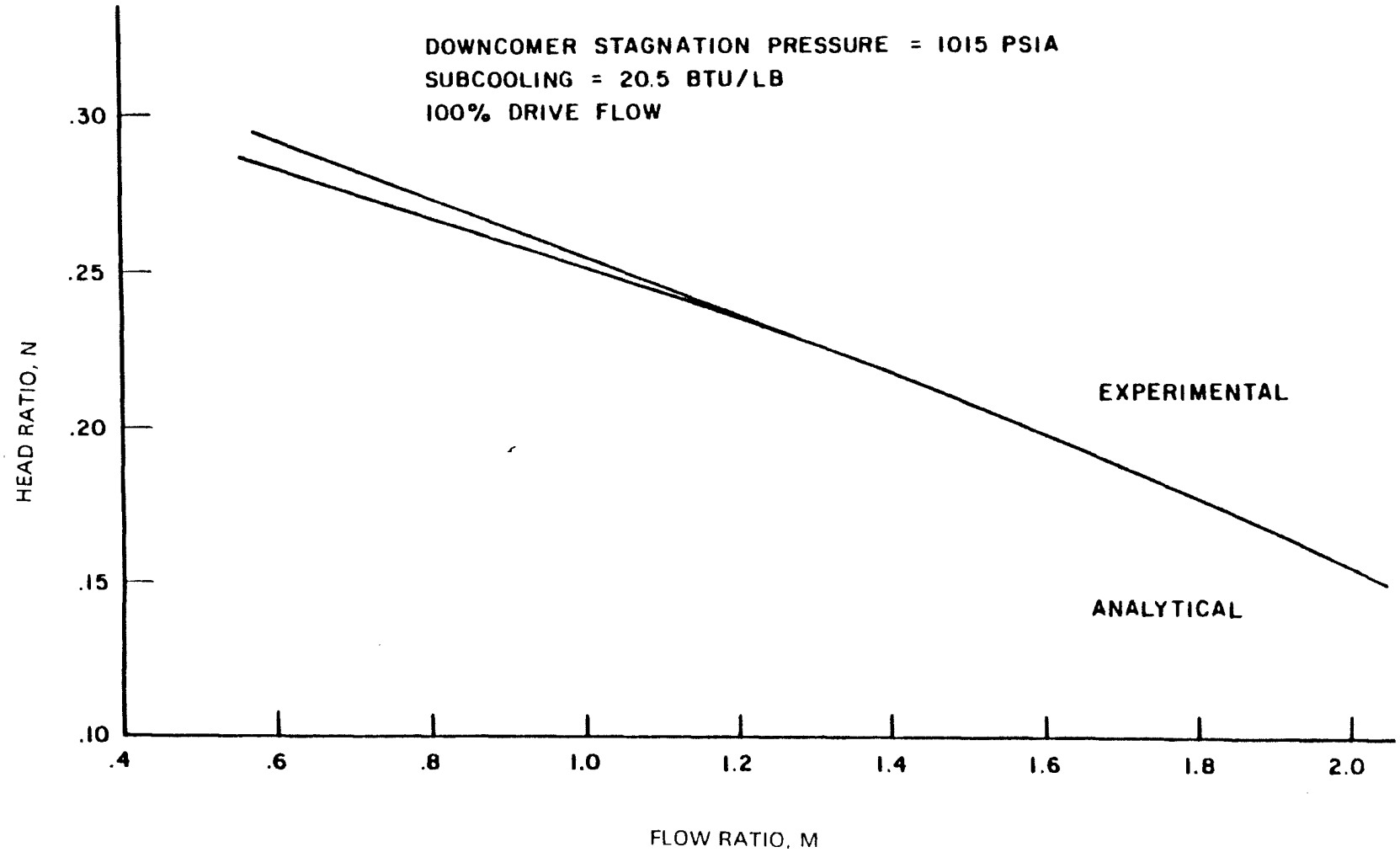

DRESDEN STATION UNITS 2 & 3
PRESSURE RISE IN JET PUMP MIXING CHAMBER DURING LOCA
FIGURE 5.4-14

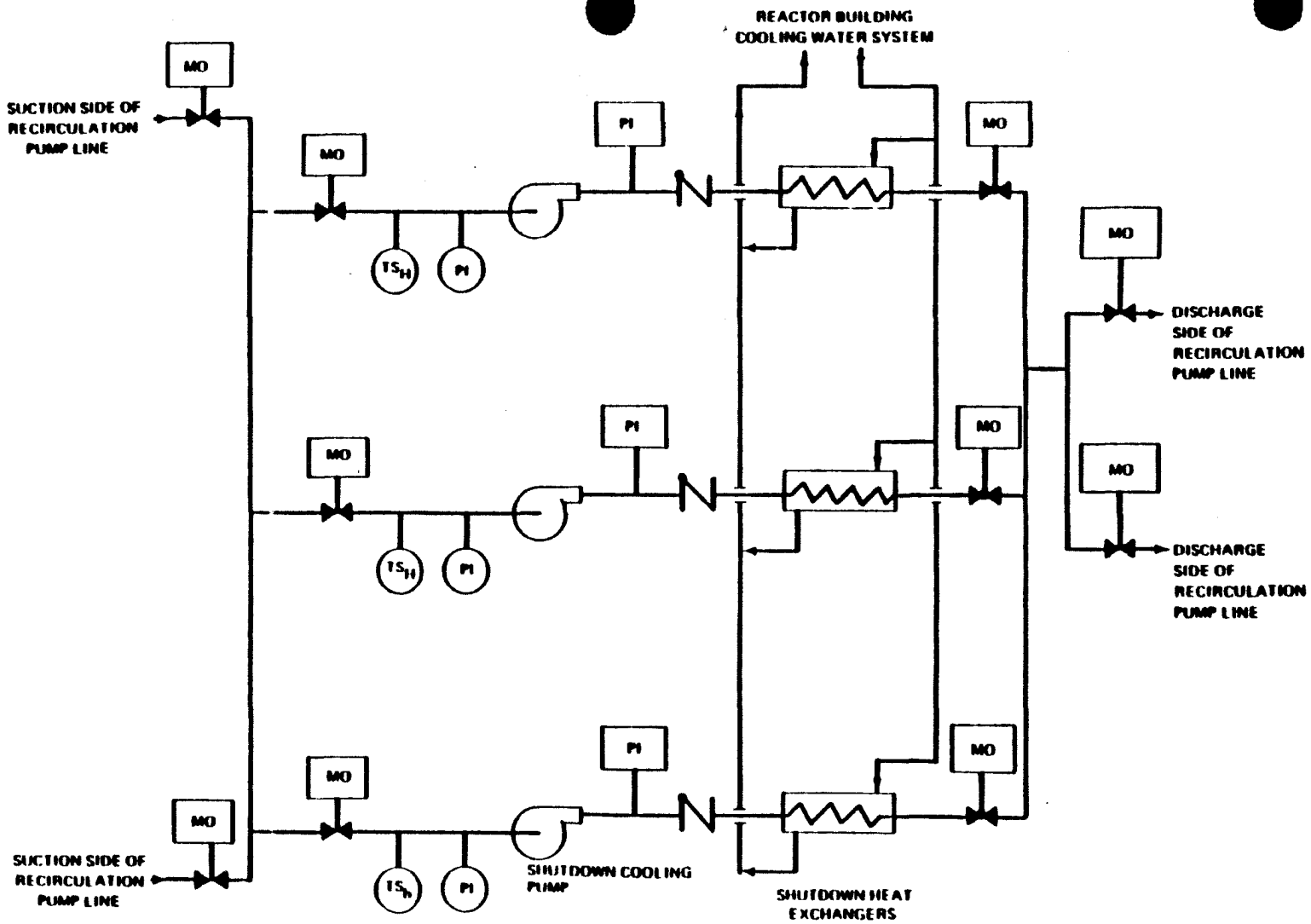

DRESDEN STATION
UNITS 2 & 3

SHUTDOWN REACTOR COOLING PIPING - SIMPLIFIED DIAGRAM

FIGURE 5.4-22

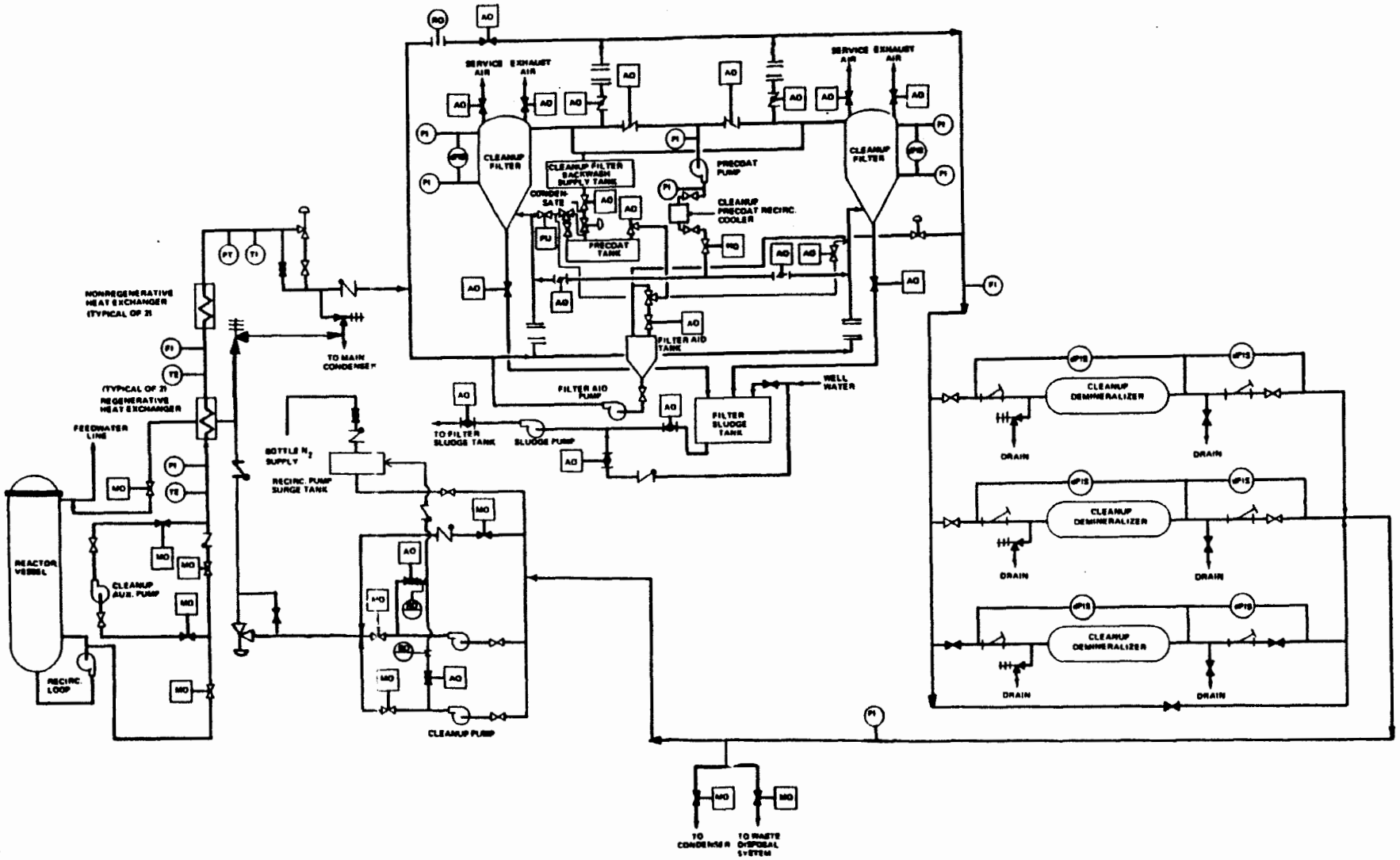

DRESDEN STATION
UNITS 2 & 3

REACTOR WATER CLEANUP PIPING - SIMPLIFIED DIAGRAM

FIGURE 5.4-25

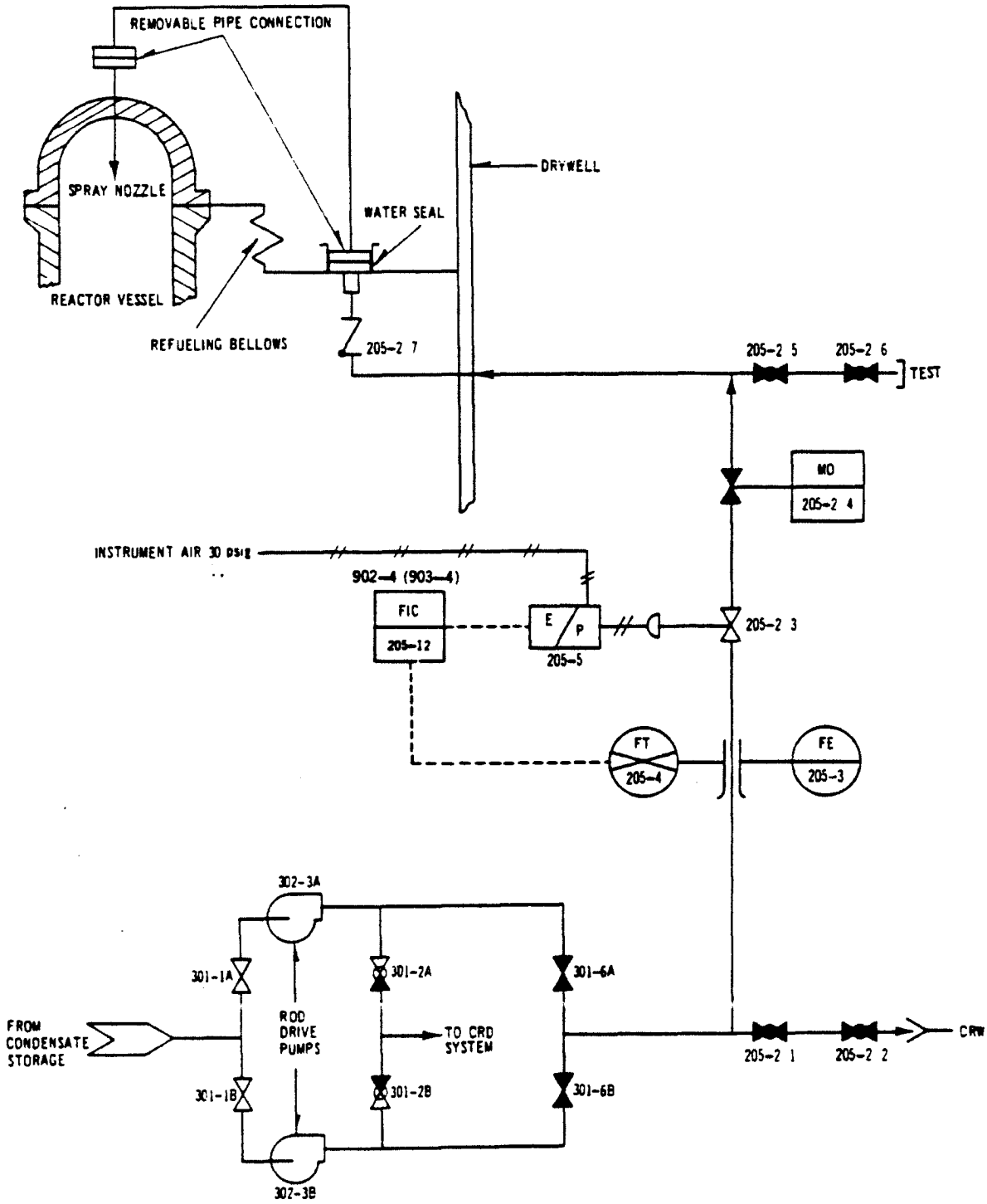

DRESDEN STATION
UNITS 2 & 3

REACTOR HEAD COOLING SYSTEM

FIGURE 5.4-28

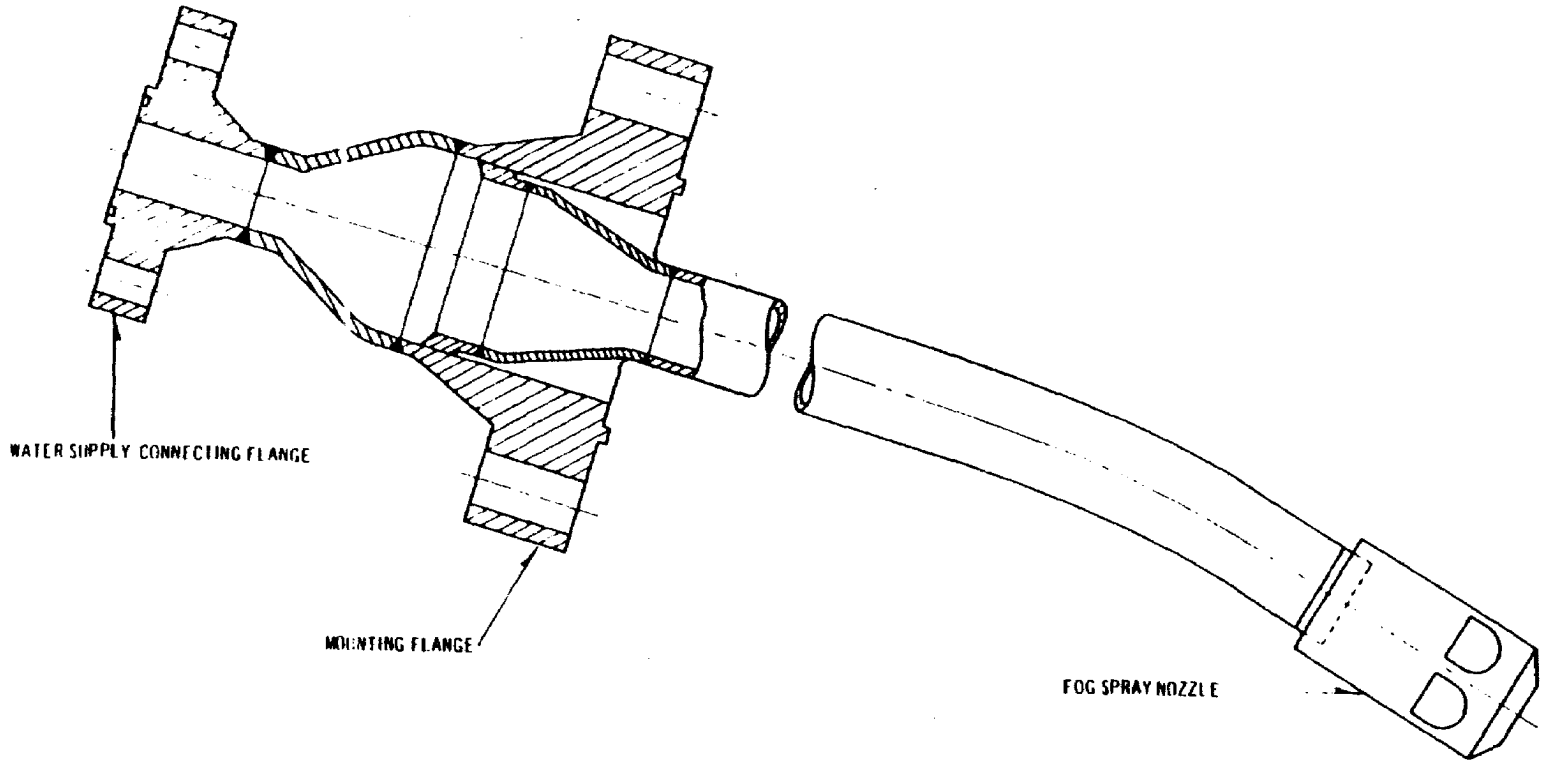

DRESDEN STATION UNITS 2 & 3
HEAD COOLING SPRAY NOZZLE
FIGURE 5.4-29