KNF 5-L/S (KEPCO NF)
: The Fresh Fuel Shipping Containers

NRC / KEPCO NF / KONES / CTR Meeting

Washington D.C., July 07, 2011

KEPCO NF
KEPCO NUCLEAR FUEL COMPANY, LTD.

KONES
Korea Nuclear Engineering & Service Corp.

CTR Technical Services, Inc.

Contents

01. Introduction
02. Package Description
03. Structural Evaluation
04. Thermal Evaluation
05. Criticality Evaluation
06. Package Operations
07. Acceptance Tests and Maintenance Program
08. Conclusions

KEPCO NF KEPCO NUCLEAR FUEL COMPANY, LTD. KONES Korea Nuclear Engineering & Service Corp. CTR Technical Services, Inc.

01. Introduction – Chang-Hwan Hwang

KEPCO Nuclear Fuel

- There are 21 nuclear power plants operating in Korea (45% of total electricity)
- All fuel for these plants is manufactured by KEPCO NF (KNF)
- During the past 20 years, new fuel has been shipped using a previously licensed container whose license is expiring next year
- KNF developed a new shipping container (the KNF 5) that meets the more stringent requirements of the IAEA regulations
- KNF obtained a contract (2009) to provide nuclear fuel for a new reactor to be built in United Arab Emirates (UAE)
- In a contract with Westinghouse, Westinghouse will supply 50% of the fuel rods for this plant. The fuel rods will be assembled into fuel assemblies by KNF in Korea.

Schedule

- The newly designed shipping container (KNF 5) is needed to ship the Westinghouse fuel rods to Korea by 2014
- Manufacturing time per container is more than one year
- Therefore, the license is needed before 2013
- The KNF 5 container will also be used to ship the final fuel assemblies from Korea to UAE (2015)
- The KNF 5 license application will be submitted to the NRC before end of August, 2011

Background

- **Regulation Changes**
  - **IAEA issued the more stringent safety standards series for Containers [IAEA TS-R-1 (2001), Regulations for the safe transport of the radioactive material]**
  - **Korean Authority adopted the revised IAEA Regulations [MEST Notice No. 2001-23]**

- **Requirements of the Reinforced Regulation**
  - **Normal conditions: Water spray, Free drop, Stacking, Penetration**
  - **Accident conditions**
    - **Drop I: Drop the container from 9 meters**
    - **Drop II: For the maximum damage, drop the container on to a bar (15cm diam., 20cm long) mounted perpendicularly on the target from 1 meter**
    - **Thermal: Exposure of the container to an average temperature of 800 ℃ for 30 minutes**

Introduction

- **The new Fresh Fuel Shipping Container developed by KEPCO NF**
- **Package Type: AF**
- **Model Name: KNF 5-L/S (Provisional)**
- **Loading Capacity: Two (2) Fuel Assemblies or up to 2x236 Individual Fuel Rods**
- **Proposed Use:**
  - **KNF 5-L: 16 x 16 CE-Type Fuel Assemblies or Individual Fuel Rods**
  - **KNF 5-S: WH-Type Fuel Assemblies (14 x 14, 16 x 16, and 17 x 17)**
- **Criticality Safety Index: 0**

Status of Containers

- **We have successfully obtained a license for the two types of containers from KINS (the Korean regulatory agency)**
  - **KNF 5-L(CE Type) & KNF 5-S(WH Type) (Jan, 2010)**

- **Currently manufacturing the containers for commercial use (May, 2011)**

- **Beginning the process to obtain the US NRC license (July, 2011)**
  - **Necessity of International Transportation of Fuel Assemblies and Fuel Rods**
    - **Import Individual Fuel Rods from WH**
    - **Assemble Fuel Rods into Fuel Assemblies at KEPCO NF**
    - **Export Fuel Assemblies to UAE**
  - **International Transportation will Begin in 2014**

02. Package Description – Charles Rombough

Packaging Overview

- **Main Components**
  - **Packaging Outer Shell (Upper & Lower)**
  - **Cradle**
  - **Shock Absorbers**
  - **T-frame**
  - **Clamping Lid with Clamping Pads**

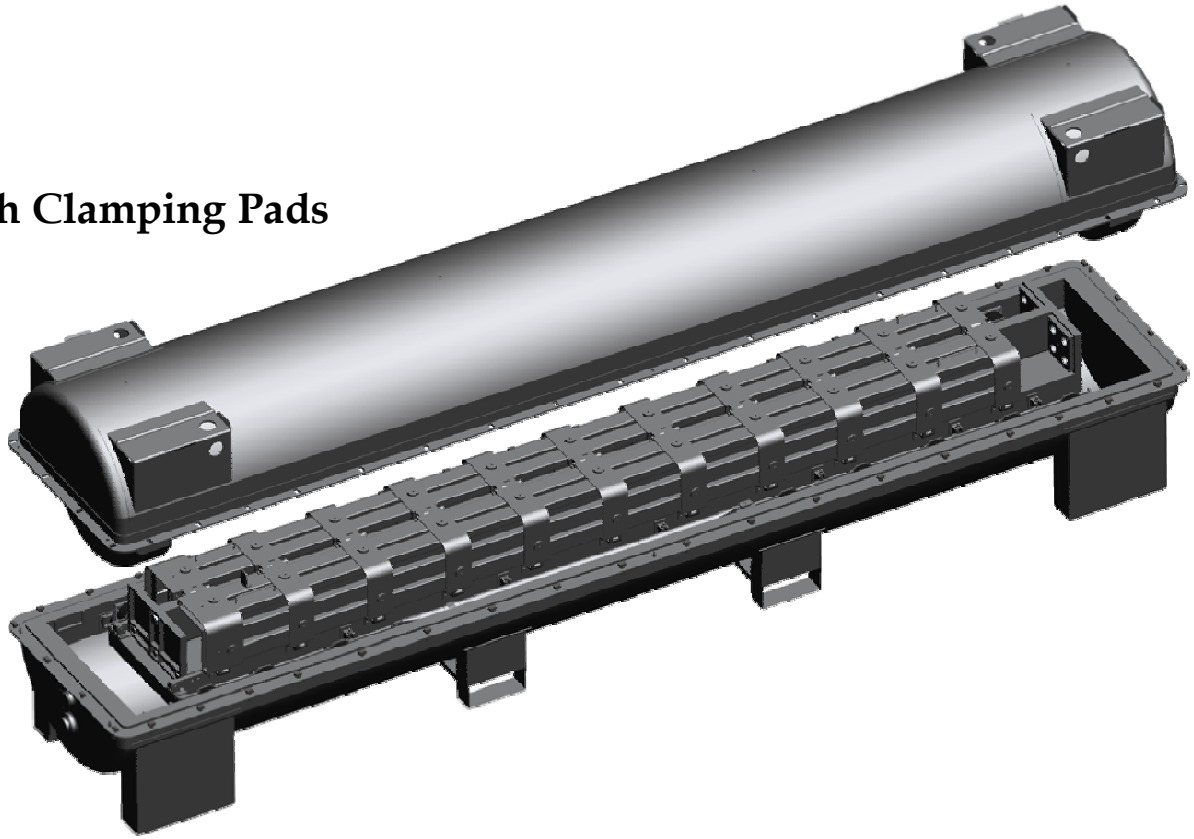

Packaging Overview

- Dimensions and Weights

Package	Length [mm (in.)]	Width [mm (in.)]	Height [mm (in.)]	Weight [kg (lbs)]		
				Package	Fuel	Total
KNF 5-L	5,500 (216.54)	1,050 (41.34)	1,100 (43.31)	2,361 (5,205)	1,312 (2,892)	3,673 (8,097)
KNF 5-S	5,050 (198.82)	1,050 (41.34)	1,100 (43.31)	2,204 (4,859)	1,346 (2,967)	3,550 (7,826)

- Materials
  - Stainless Steel: Structure Body, Bolts, Nuts, Beams
  - Polyurethane Foam: Thermal Insulator, Damper
    - Fire Retardant & Self-extinguishing Polyurethane Foam
  - B4C-Al Full Metal Matrix Composite Plates: Neutron Absorber
  - Natural Rubber: Shock Absorber

Packaging Shell

- Packaging Shells
  - Two Concentric Layers of Cylindrical Stainless Steel Sheets
  - Cavity Filled with 10 pcf (lbs/ft^3) Polyurethane Foam (Thermal Insulator)

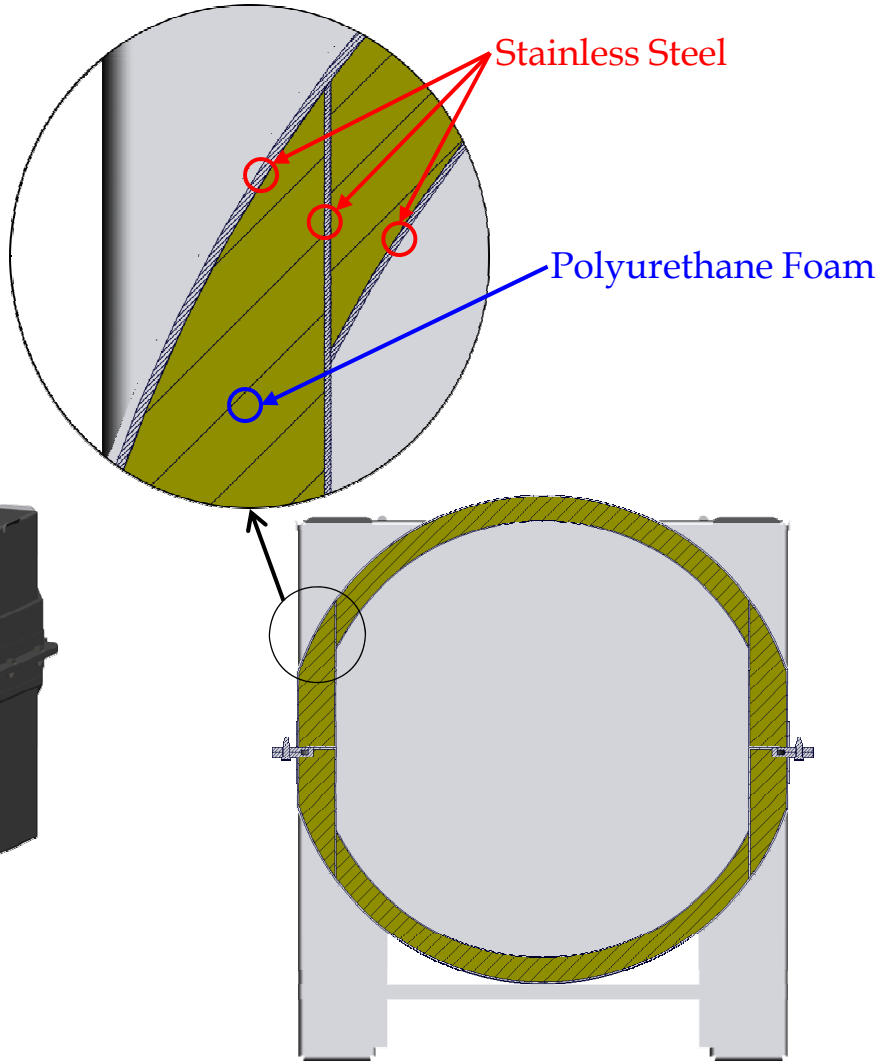

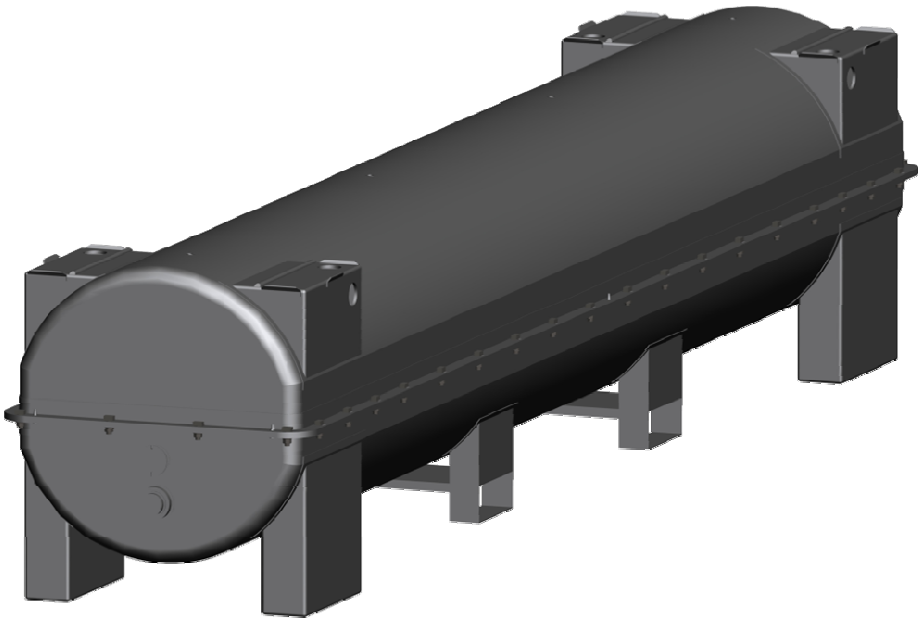

Packaging Outer Shell

- Packaging Opening and Closure
  - Upper-half and Lower-half of the Cylindrical Shell are Separated
  - Flanges of the Upper and Lower Shells are Tied with 44 (KNF 5-L) or 42 (KNF 5-S) Flange Bolts when the Package is Being Transported

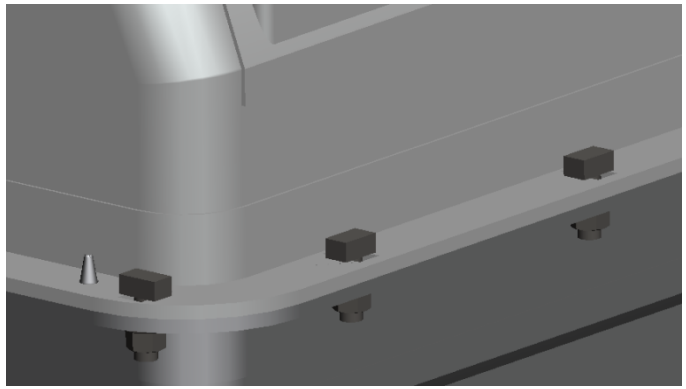

- Top/Bottom End Damper
  - 6pcf Polyurethane Foam Damper Sheathed with Thin Stainless Steel Sheet

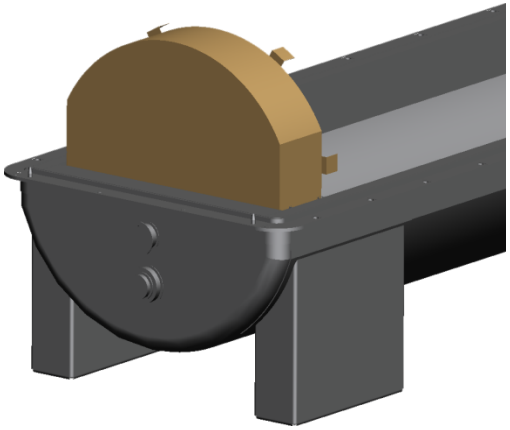

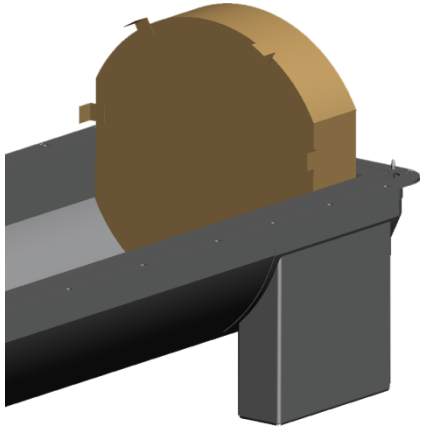

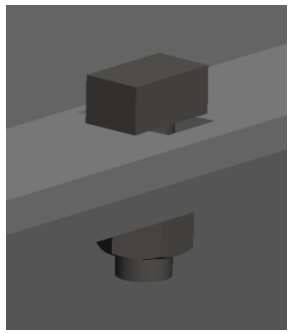

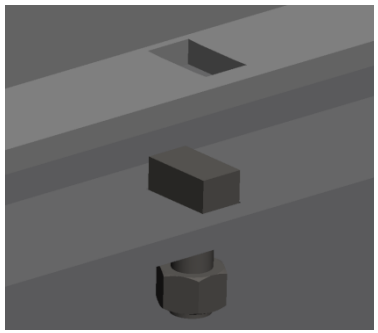

Shock Absorbers and Cradle

- Shock Absorbers
  - Rubber spring systems
  - 13 for each side (total 26)

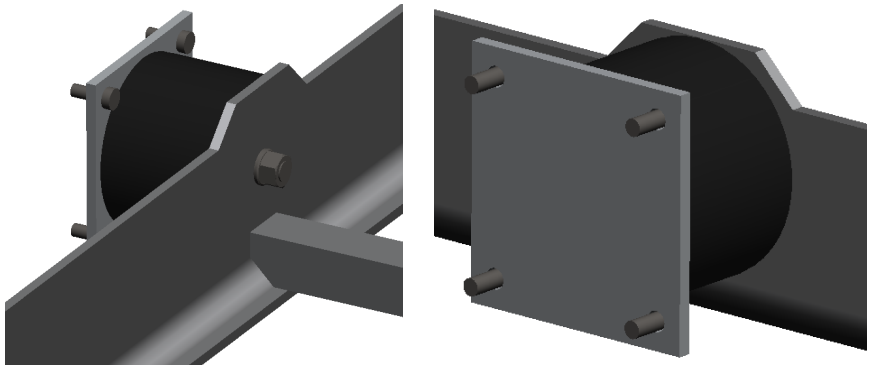

- Cradle
  - Stainless Steel Frame
  - Connected with Outer Shell (Lower Shell Plate) through Shock Absorbers
  - 12 Hinged Bolts to Hold T-frame Assembly

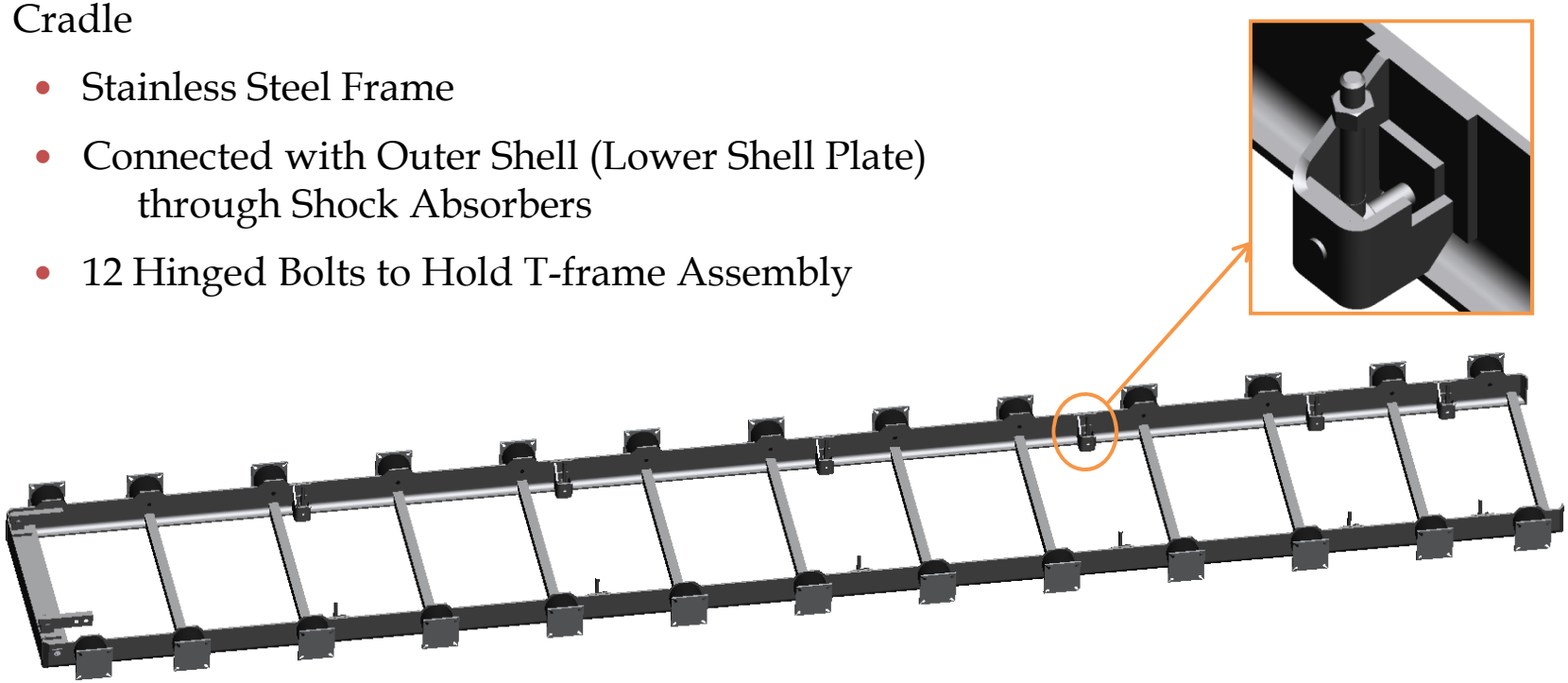

T-frame Assembly

- T-frame
  - Contains 2 Fuel Assemblies
  - 4 Neutron Absorbers
  - Horizontal and Vertical Rectangular Tubes inside the T-frame Body
- Clamping Lids
  - Pad Housing contains 2 Clamping Pads
  - Hinges and Latch Pins Lock the Lid (Pad Housing)
  - Used to hold the Assemblies tightly to the T-frame

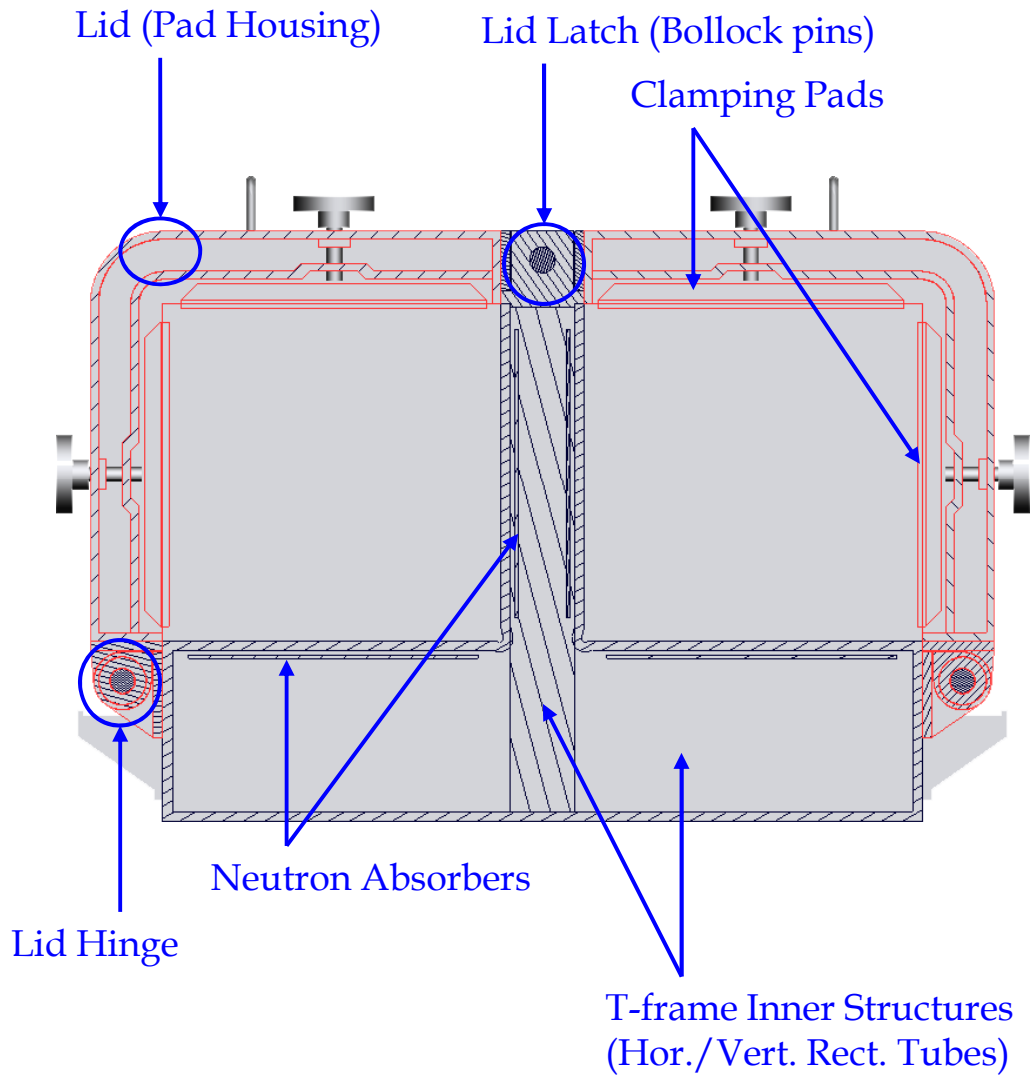

KEPCO NF KEPCO NUCLEAR FUEL COMPANY, LTD. KONES Korea Nuclear Engineering & Service Corp. CTR Technical Services, Inc.

T-frame Assembly

- T-frame Assembly Standing Mechanism
  - T-frame will be Raised to be Vertical to Load/Unload Fuel Assemblies
  - Fuel Loading/Unloading Beam
  - T-frame Support Bar

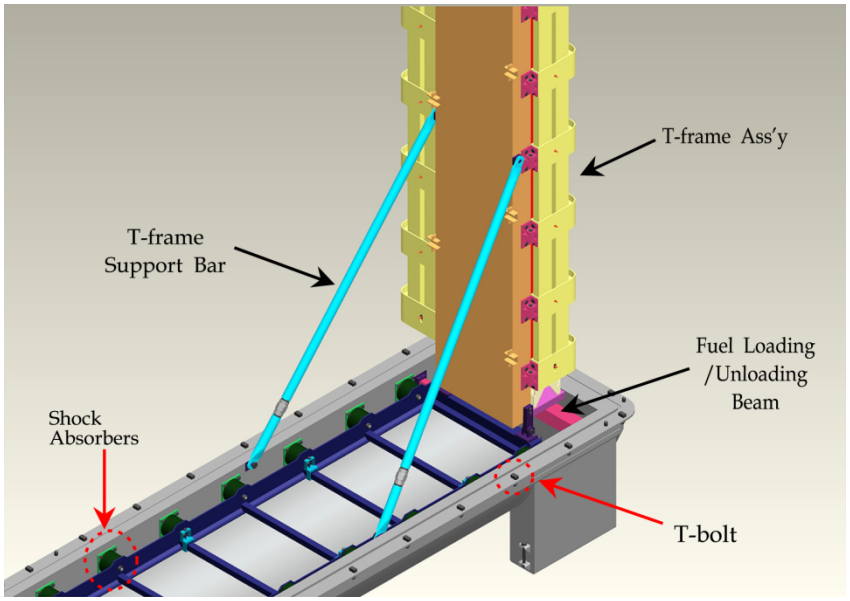

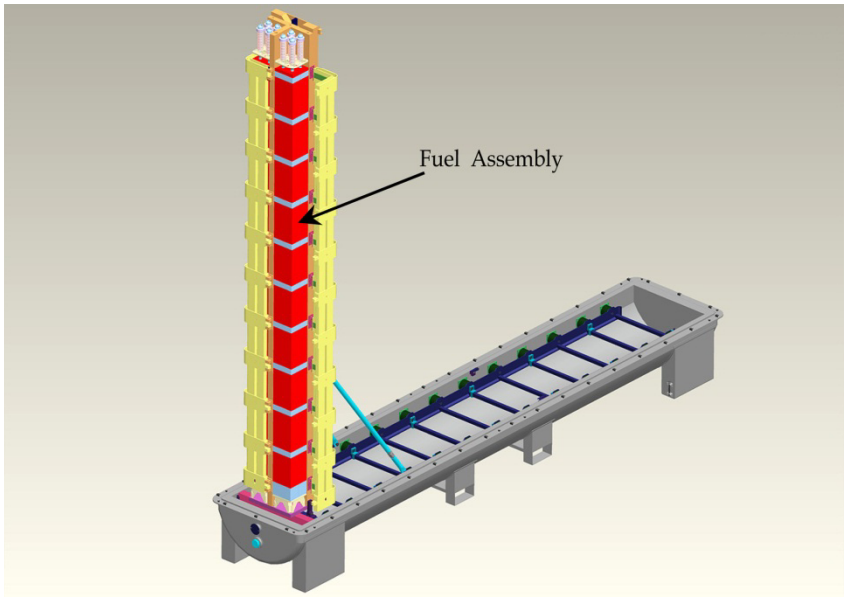

Contents of the Package

- CE Type Fuel Assemblies: KNF 5-L
  - Two 16x16 PLUS7
- Westinghouse Type Fuel Assemblies: KNF 5-S
  - Two 14x14 OFA
  - Two 16x16 ACE7
  - Two 17x17 ACE7
- Fuel Rod Transportation Case: KNF 5-L
  - Fuel Rod Cases containing 236 individual Fuel Rods (Same as the Number of Rods in PLUS7 Fuel Ass'y)
  - Nearly the same as the Dimensions and Weight of the PLUS7 Fuel Assembly

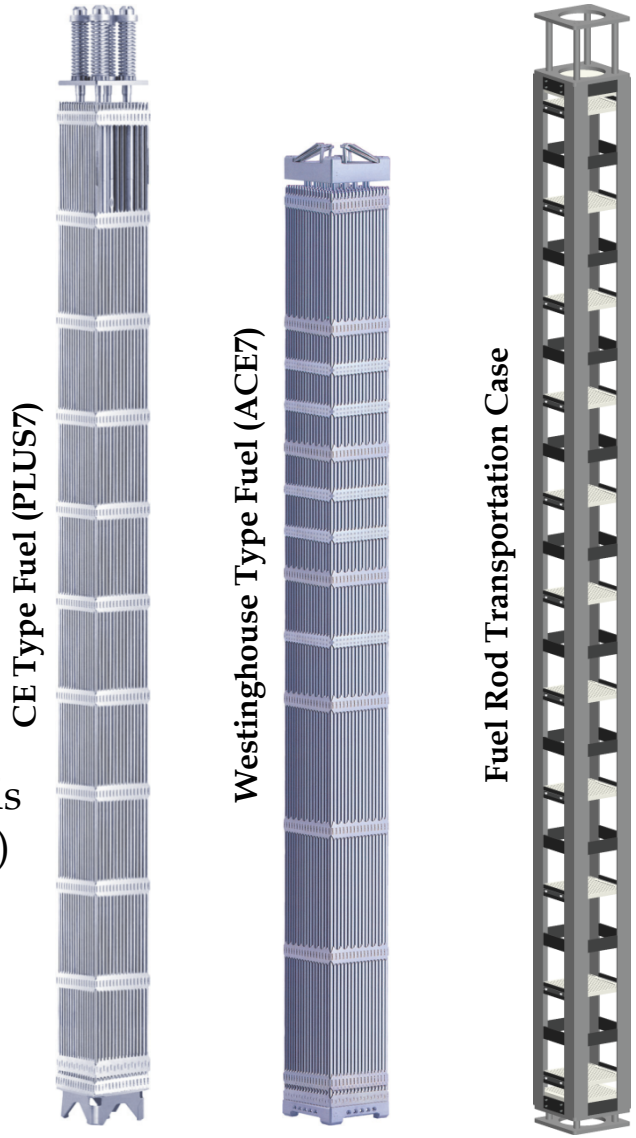

KEPCO NF KEPCO NUCLEAR FUEL COMPANY, LTD. KONES Korea Nuclear Engineering & Service Corp. CTR Technical Services, Inc.

Fuel Rod Transportation Case

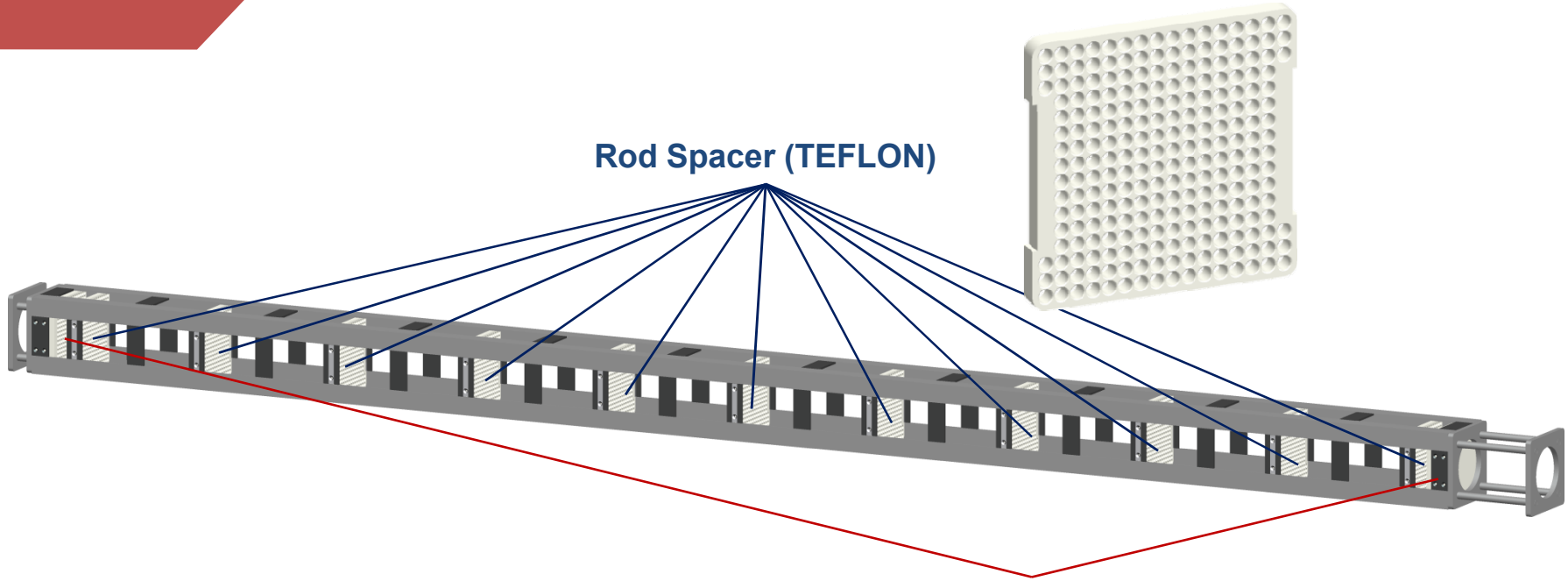

	PLUS7	Rod Case
Weight [kg (lbs)]	639.17 (1,409.13)	638.75 (1,408.20)
Outer Dimension	206.6	207

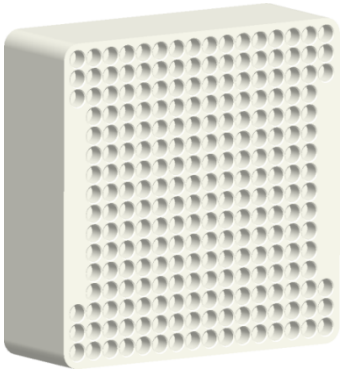

KEPCO NF KEPCO NUCLEAR FUEL COMPANY, LTD. KONES Korea Nuclear Engineering & Service Corp. CTR Technical Services, Inc.

03. Structural Evaluation
- Yong Hoon Lee

Structural Evaluation

- Structural Analyses (ANSYS, ANSYS LS-DYNA)
  - General Requirements
    - Lifting: 3 x gross weight
    - Tie-down: No Tie-down Device as a Structural Part of the Package
  - Normal Conditions of Transport
    - Water Spray: No Retentive Material
    - Free Drop: 1.2m (≈ 4 ft.)
    - Penetration: 1m (≈ 40 in.)
    - Stacking: 5x Weight Compression
  - Hypothetical Accident Conditions
    - Free Drop: 9m (≈ 30 ft.)
    - Puncture: 1m (≈ 40 in.)
- Structural Tests
  - Hypothetical Accident Conditions
    - Free Drop: 9m (≈ 30 ft.)
    - Puncture: 1m (≈ 40 in.)

General Requirements

- Mechanical Strength of Lifting Attachment
  - The lifting analysis is performed with 3 times the gross weight of the package
  - 21% of Yield Strength

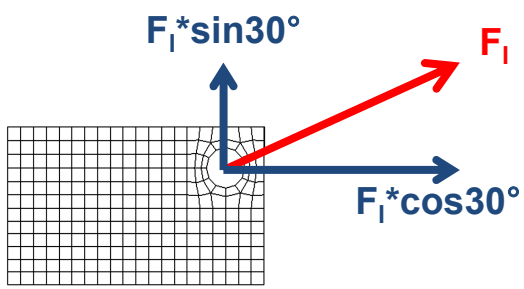

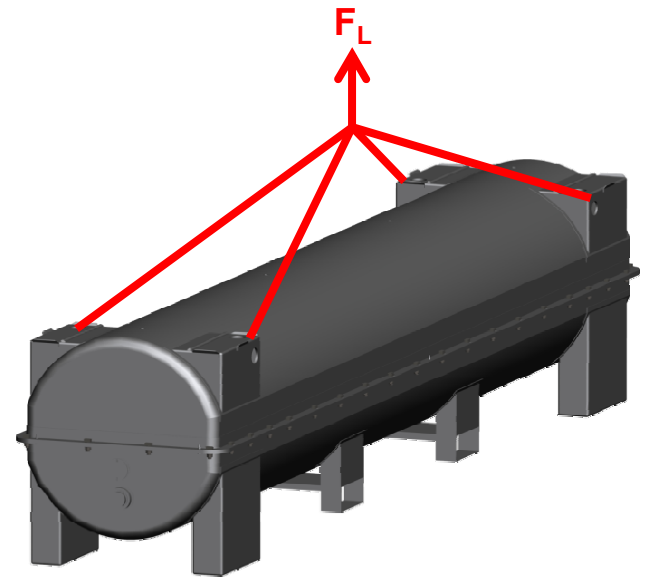

- Mechanical Strength of Tie-down Device
  - KNF 5-L/S Fresh Fuel Shipping Containers do not have any Tie-down Device as a Structural Part of the Package

Normal Conditions of Transport

- Free Drop Analysis (ANSYS LS-DYNA)
  - Height: 1.2m (≈ 4 ft.)
  - Numerically Evaluated for 1 Representative Case
  - 29% of Ultimate Strength (true stress)

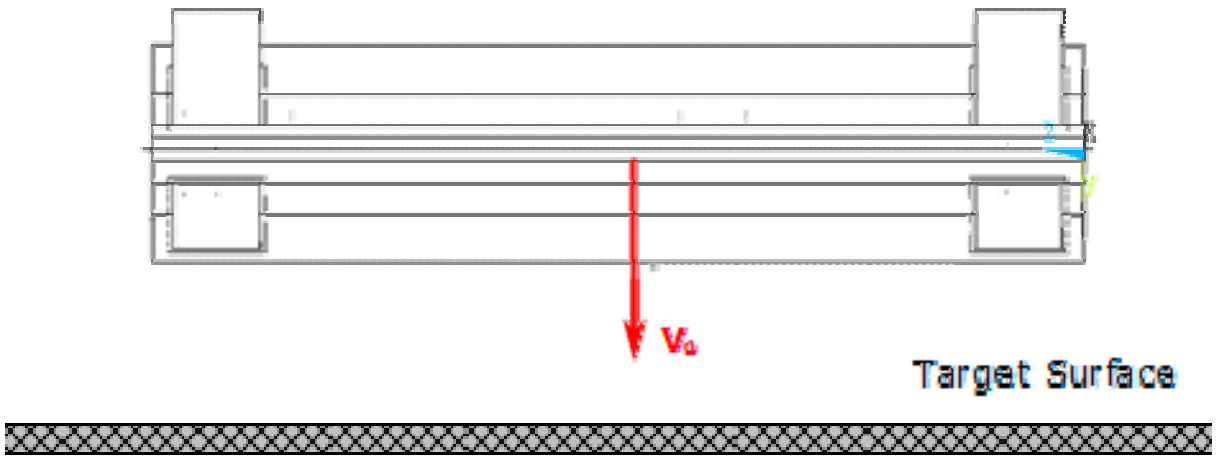

KEPCO NF KEPCO NUCLEAR FUEL COMPANY, LTD. KONES Korea Nuclear Engineering & Service Corp. CTR Technical Services, Inc.

Normal Conditions of Transport

- Free Drop Analysis
  - (x5 scale factor)

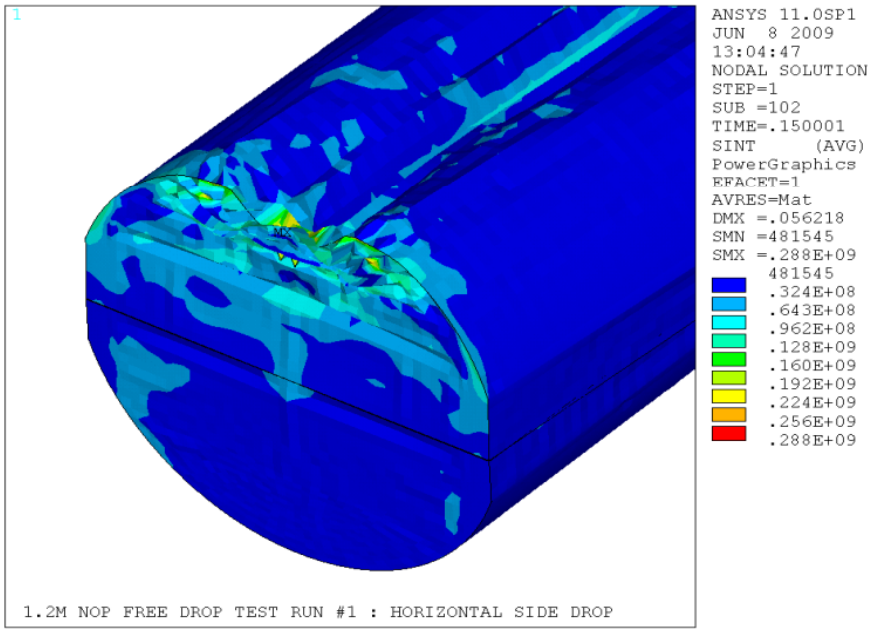

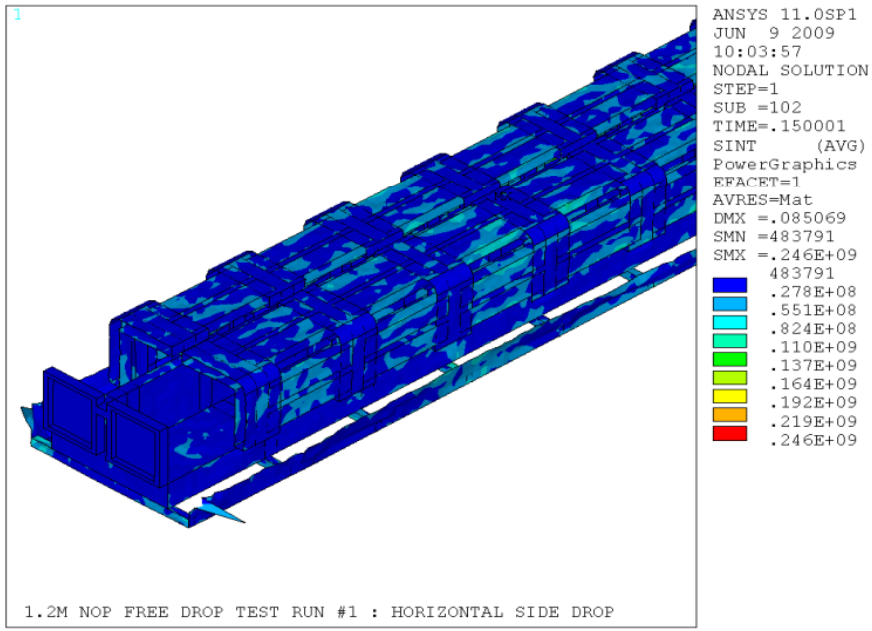

Normal Conditions of Transport

- Penetration Analysis
  - Height: 1 m (≈ 40 in.)
  - Numerically Evaluated
  - 17% of Yield Strength

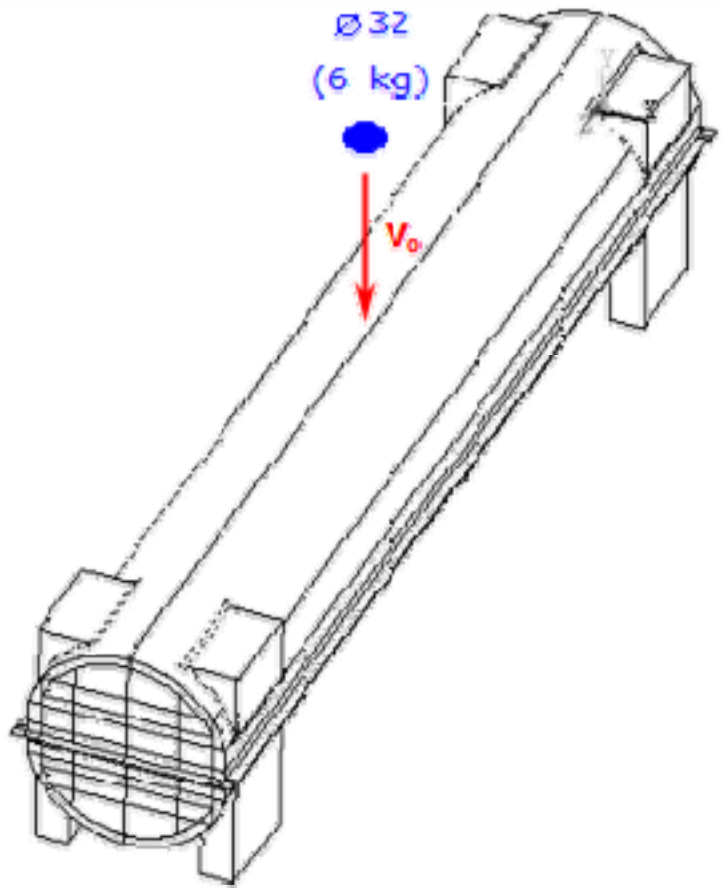

Normal Conditions of Transport

- Penetration Analysis
  - (x7,000 scale factor)

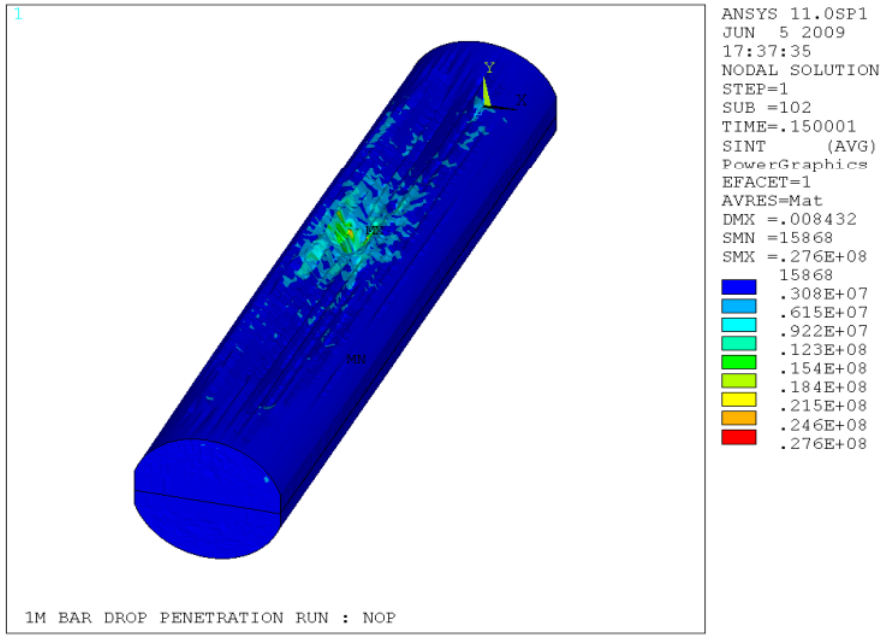

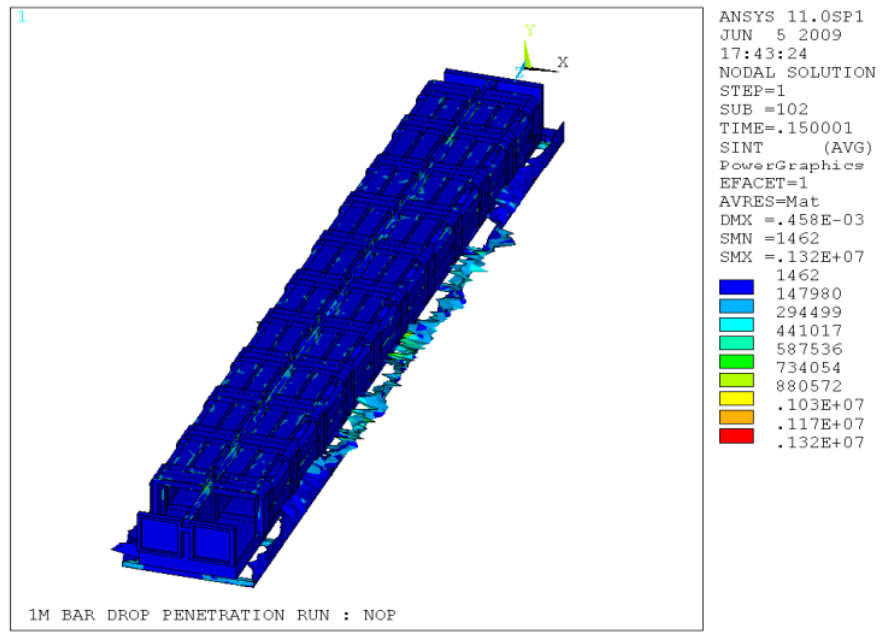

Normal Conditions of Transport

- Stacking Analysis (ANSYS)
  - 5 times the gross weight compression on the 4 stacking pads
  - Maximum 64% of Yield Strength

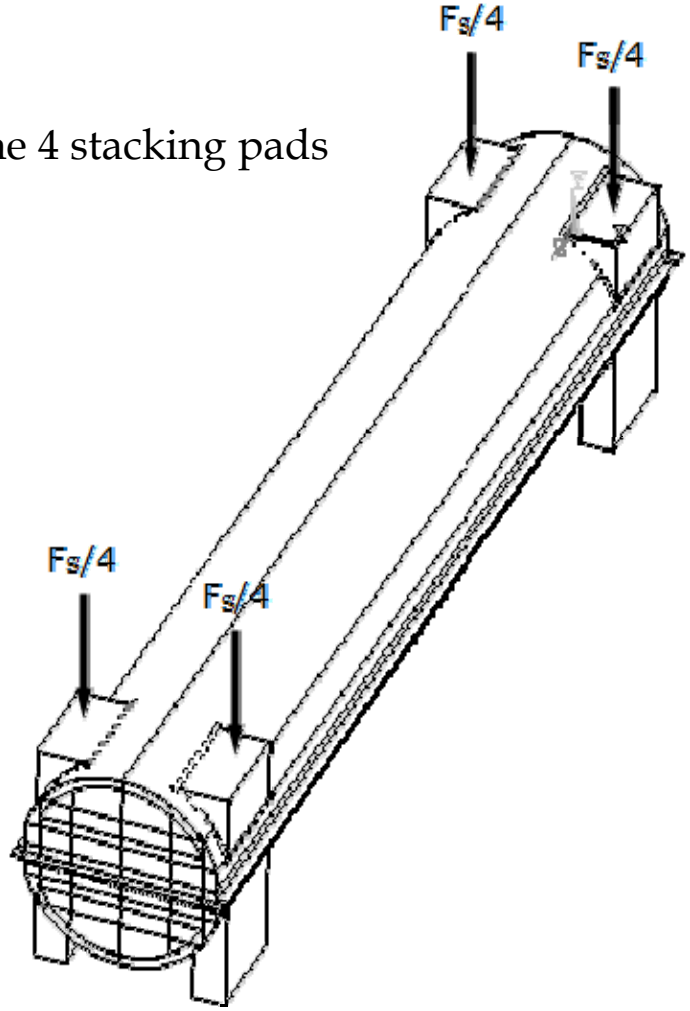

Normal Conditions of Transport

- Stacking Analysis
  - (x7,000 scale factor)

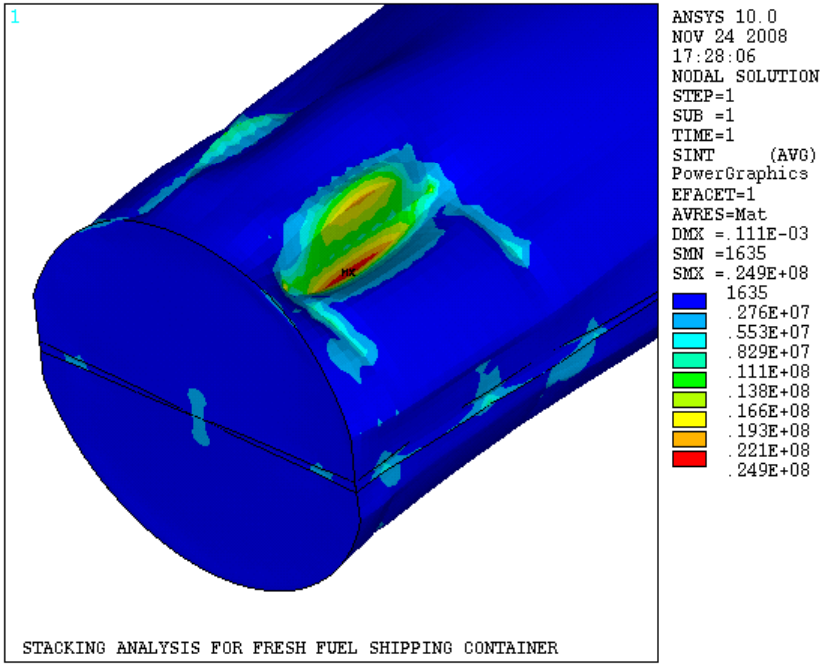

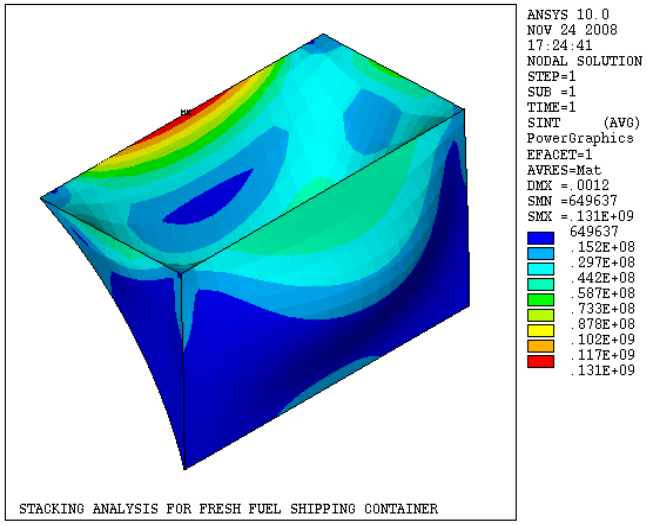

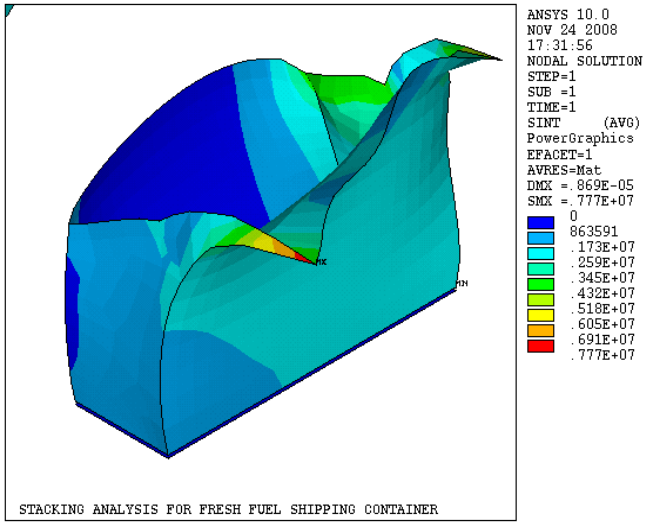

Hypothetical Accident Conditions

- Free Drop Analysis (Total 15 cases) (ANSYS LS-DYNA)
  - Upper-Outer shell - Side Impact: 9 cases
  - Height: 9m (≈ 30 ft.)

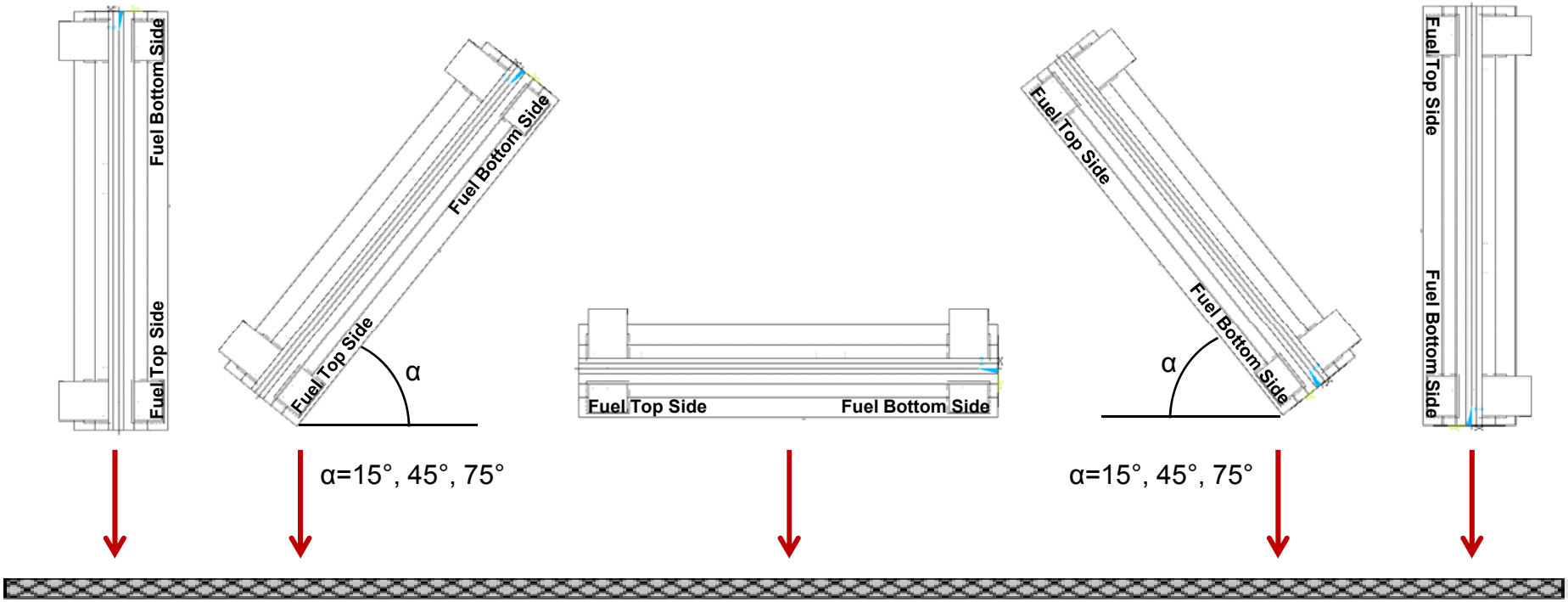

KEPCO NF KEPCO NUCLEAR FUEL COMPANY, LTD. KONES Korea Nuclear Engineering & Service Corp. CTR Technical Services, Inc.

Hypothetical Accident Conditions

- Free Drop Analysis (Total 15 cases) - continued
  - Flange-Side Impact: 6 cases
  - Height: 9m (≈ 30 ft.)

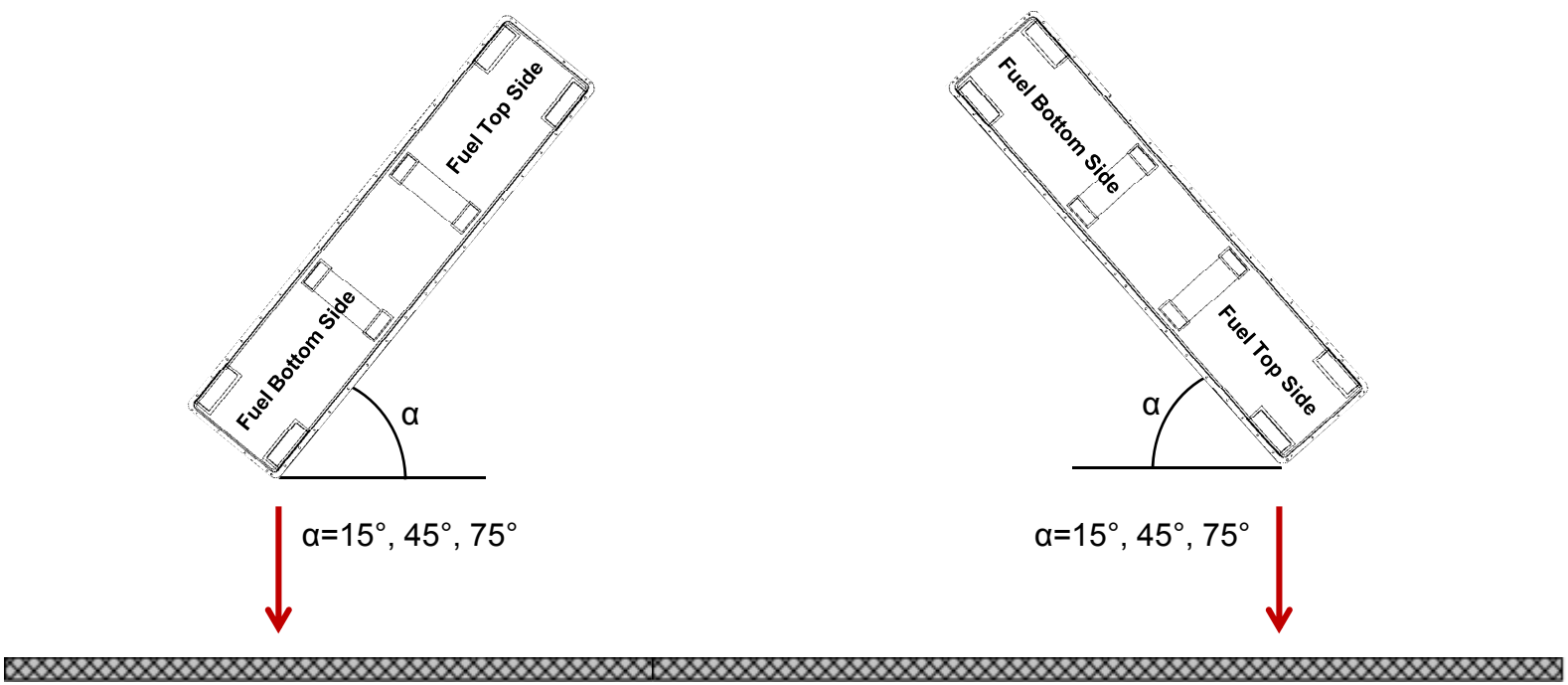

Hypothetical Accident Conditions

- Free Drop Analysis (ANSYS LS-DYNA)
  - Maximum 70% of Ultimate Strength (Structure)
  - Maximum 9% of Yield Strength (Fuel Rods)

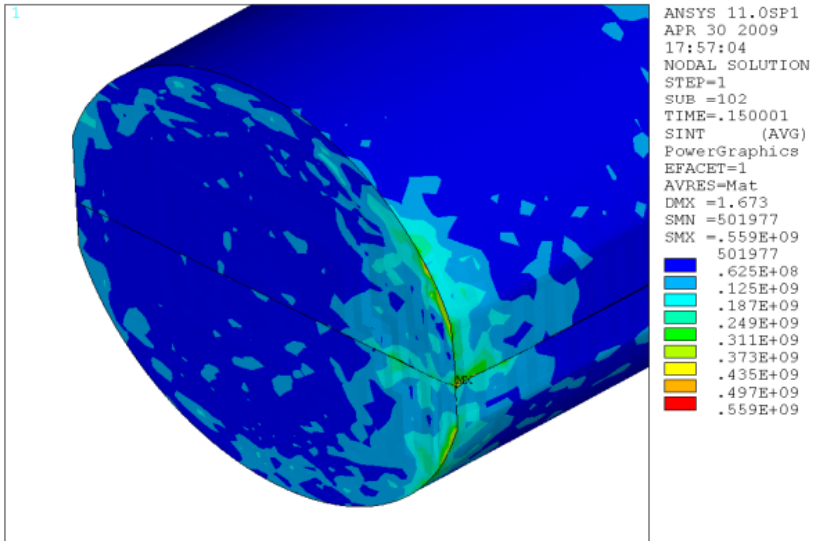

Flange Top 45° : 559MPa (81.1ksi)

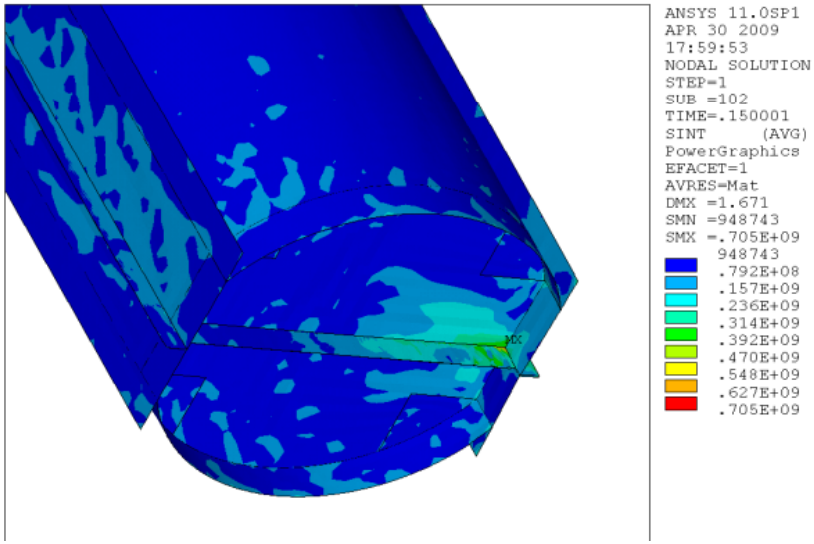

Flange Top 45° : 705MPa (102.3ksi)

Hypothetical Accident Conditions

- Free Drop Analysis

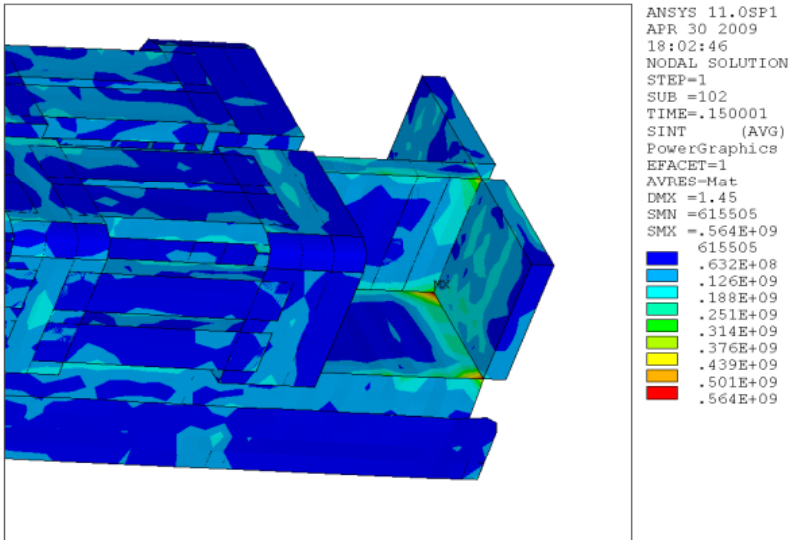

Flange Top 45° : 564MPa (81.8ksi)

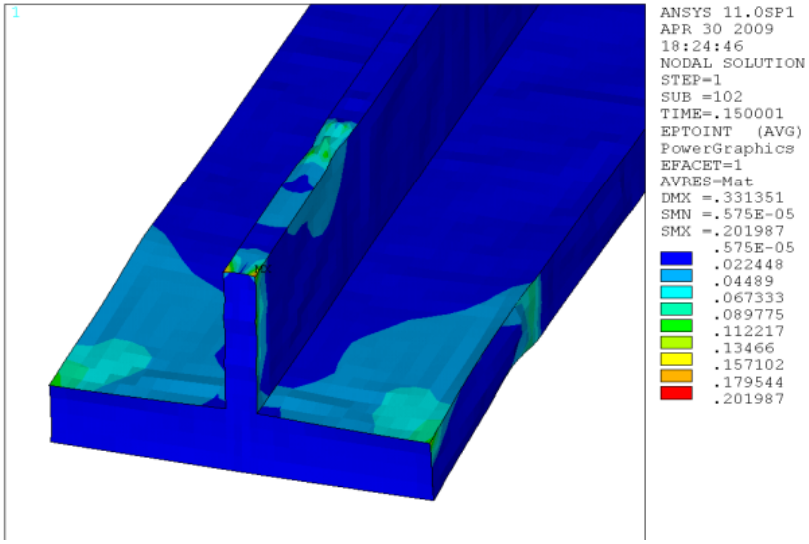

Flange Bottom 75° : 0.20m/m(in./in.)

Hypothetical Accident Conditions

- Free Drop Analysis

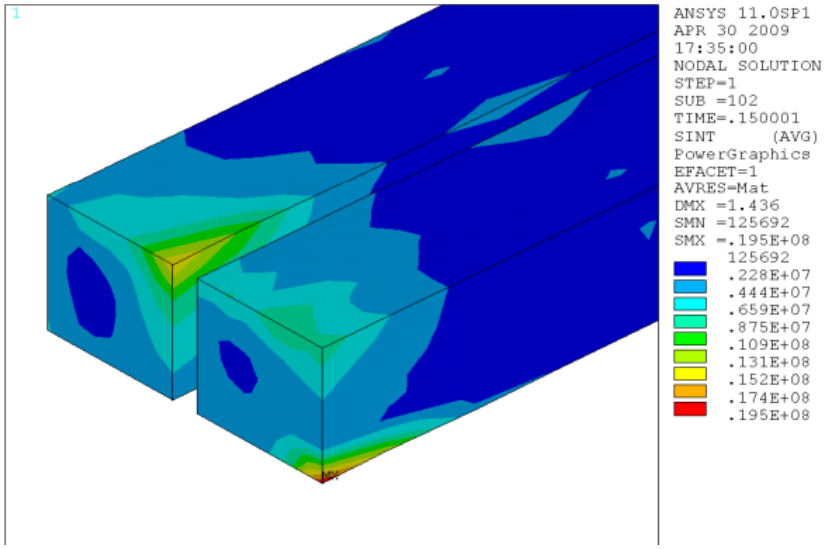

Flange Top 15° : 19.5MPa (2.83ksi)

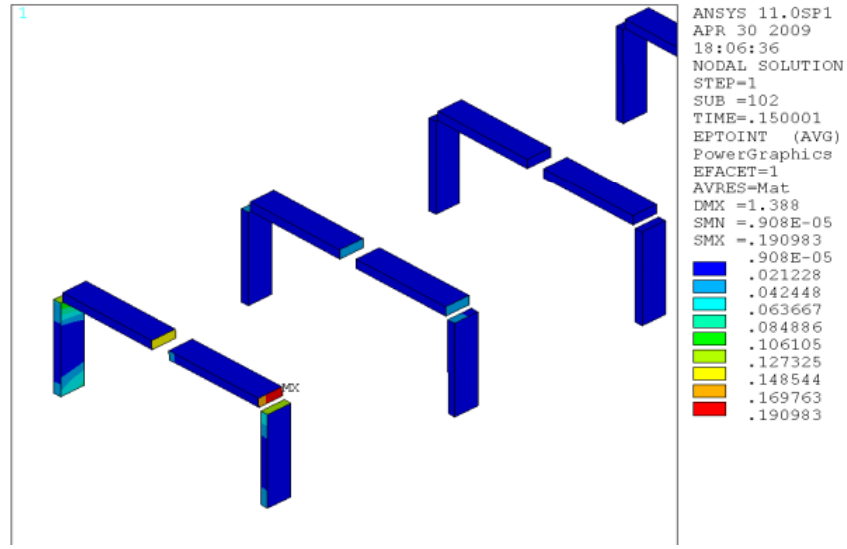

Flange Top 45° : 0.19m/m(in./in.)

KEPCO NF KEPCO NUCLEAR FUEL COMPANY, LTD. KONES Korea Nuclear Engineering & Service Corp. CTR Technical Services, Inc.

Hypothetical Accident Conditions

Drop Case	FA [MPa (ksi)]	Case	FA [MPa (ksi)]
UD 0°	12.4	Fuel Bottom 90°	9.0
UD Fuel Top 15°	15.1	FD Fuel Top 15°	**19.5**
UD Fuel Top 45°	11.7	FD Fuel Top 45°	12.4
UD Fuel Top 75°	11.1	FD Fuel Top 75°	10.9
Fuel Top 90°	10.4	FD Fuel Bottom 15°	16.5
UD Fuel Bottom 15°	9.5	FD Fuel Bottom 45°	13.6
UD Fuel Bottom 45°	12.8	FD Fuel Bottom 75°	10.7
UD Fuel Bottom 75°	10.1	Puncture	7.7

Hypothetical Accident Conditions

- Free Drop Test (1 Representative case)
  - Most Severe Case
    - Case of Max. Stress on Fuel Assembly from FE Analysis
    - Fuel Top Side Flange 15° Drop
  - Height: 9m (≈ 30 ft.)

Hypothetical Accident Conditions

- Free Drop Test

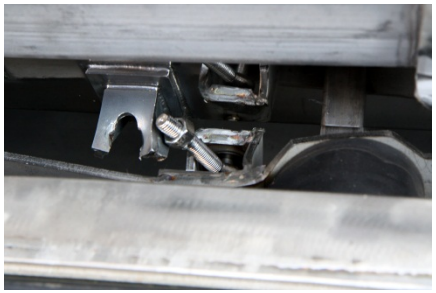

KEPCO NF KEPCO NUCLEAR FUEL COMPANY, LTD. KONES Korea Nuclear Engineering & Service Corp. CTR Technical Services, Inc.

Hypothetical Accident Conditions

- Free Drop Test

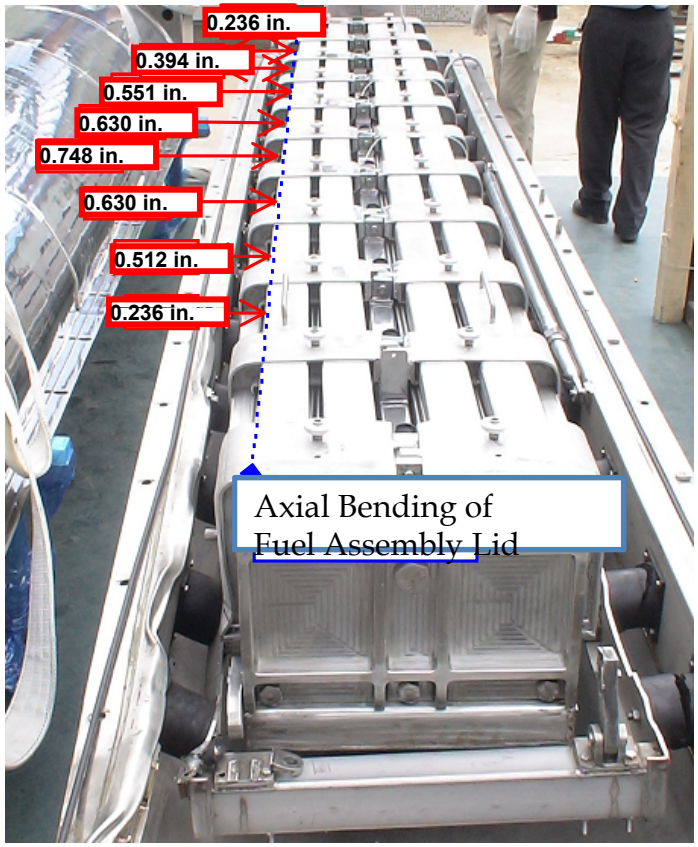

Hypothetical Accident Conditions

- Puncture Analysis (ANSYS LS-DYNA)
  - Height: 1m (≈ 40 in.)
  - Maximum 37% of Ultimate Strength (Structure)
  - Maximum 4% of Yield Strength (Fuel Rods)

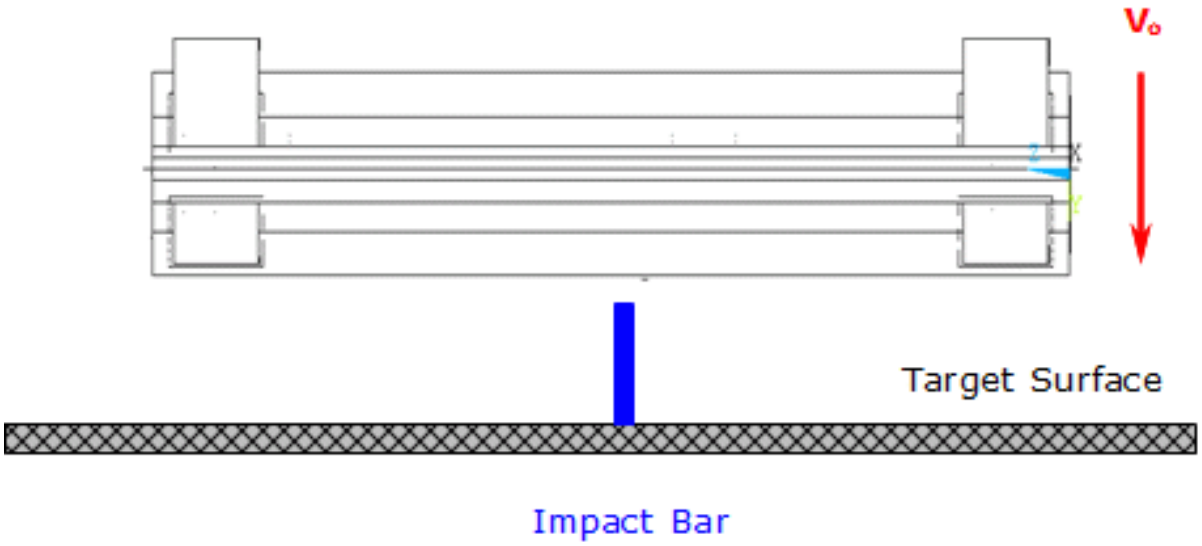

Hypothetical Accident Conditions

- Puncture Analysis

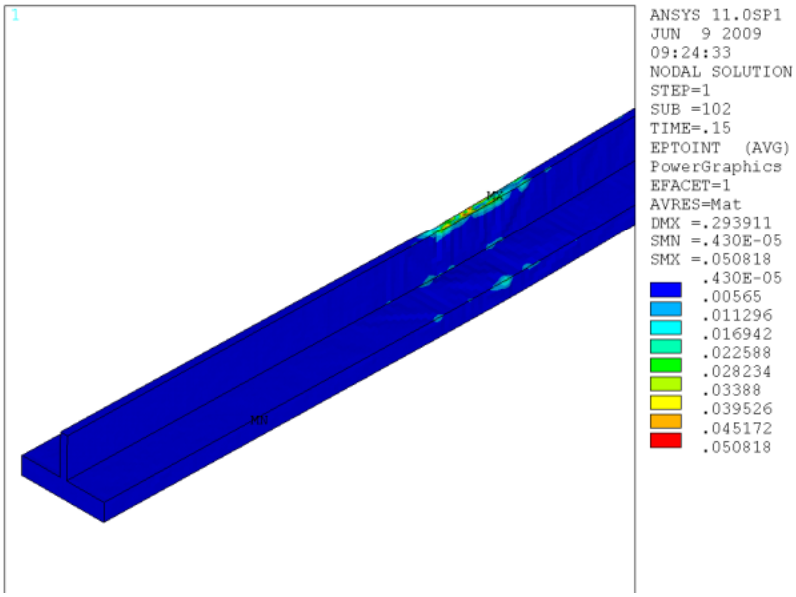

T-Frame : 0.05m/m(in./in.)

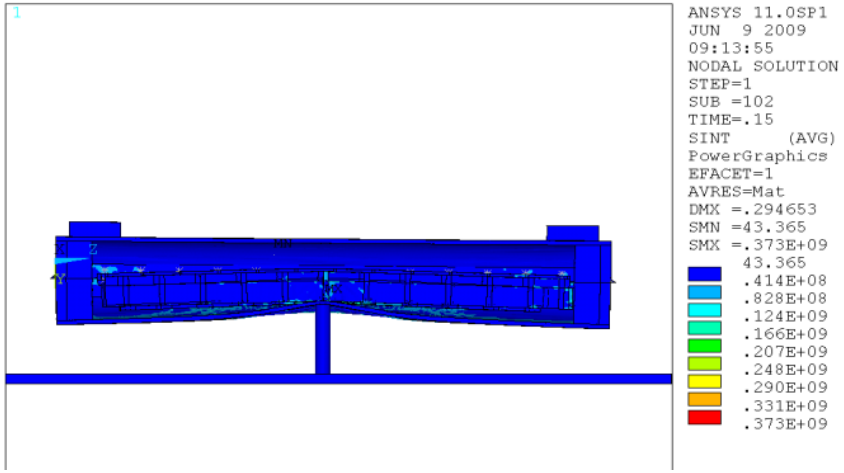

Puncture : 373MPa (54.1ksi)

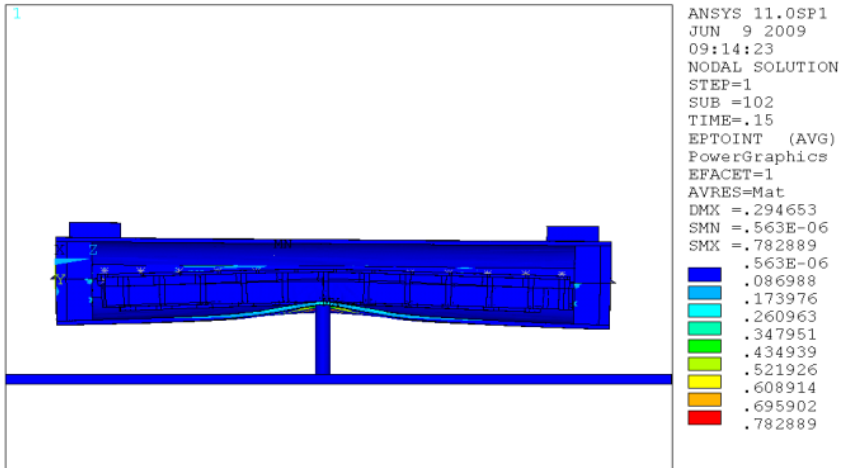

Puncture : 0.78m/m(in./in.)

Hypothetical Accident Conditions

- Puncture Test
  - Height: 1m (≈ 40 in.)
  - Puncture Displacement: 105mm (≈ 4.13 in.) (Analysis: 115mm (≈ 4.53 in.))

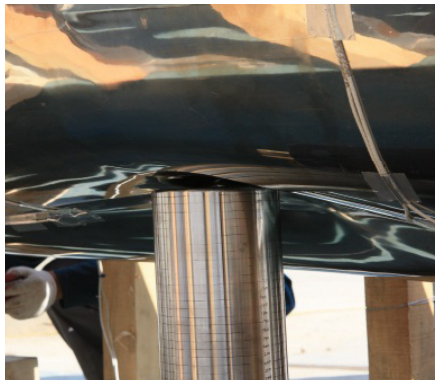

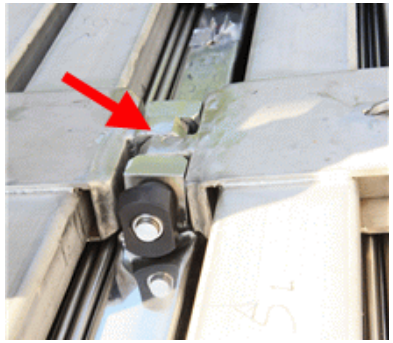

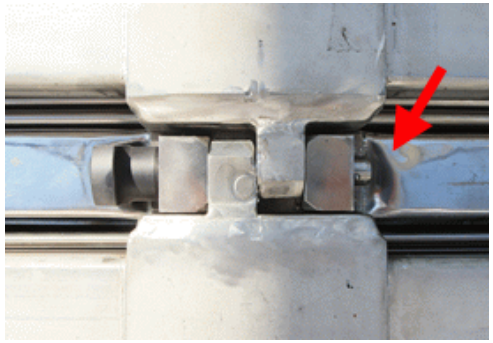

Hypothetical Accident Conditions

- Puncture Test

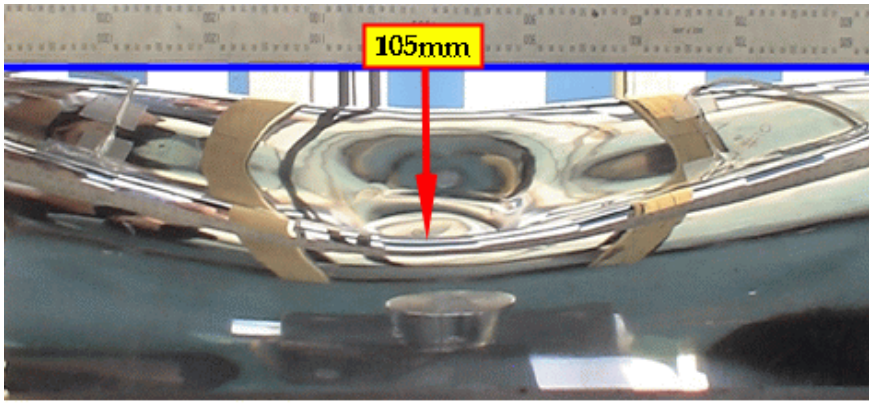

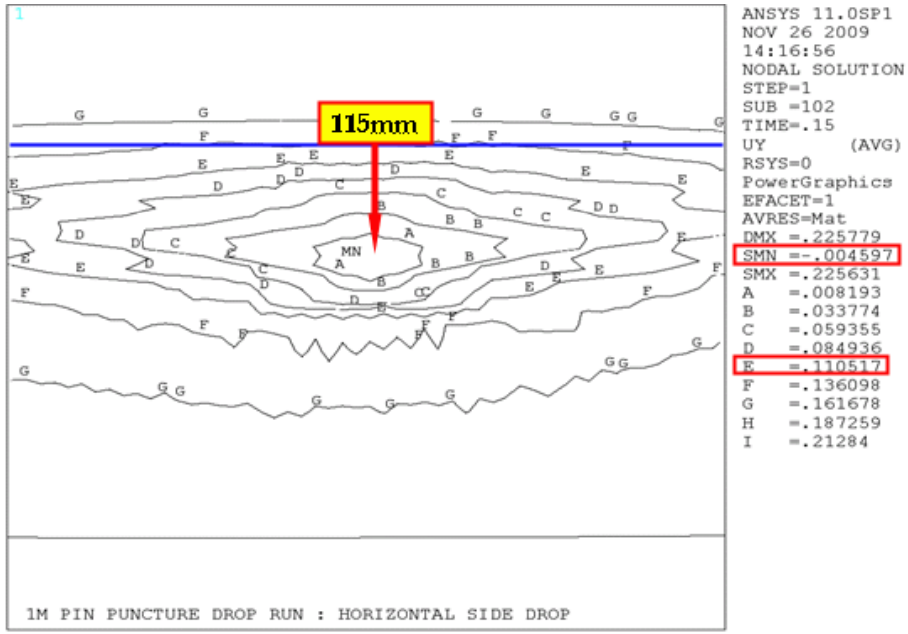

Test Results

Location	Fuel 1 Width [mm]		Fuel 1 Height [mm]	
	before	after	before	after
#1	202.23	196.64	202.01	196.50
#2	201.77	195.38	201.40	195.48
#3	201.45	199.69	201.33	199.74
#4	202.22	200.68	201.94	197.61
#5	202.16	197.19	201.92	196.88
#6	202.24	188.94	202.23	188.38
#7	202.25	184.49	201.48	198.96
#8	202.09	181.90	201.59	198.40
#9	201.90	177.21	201.50	195.8
#10	202.29	181.21	201.69	187.71

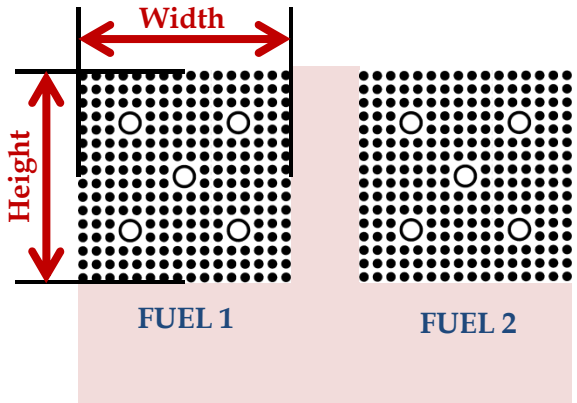

KEPCO NF KEPCO NUCLEAR FUEL COMPANY, LTD. KONES Korea Nuclear Engineering & Service Corp. CTR Technical Services, Inc.

Test Results

Location	Fuel 2 Width [mm]		Fuel 2 Height [mm]		Area [mm²]	
	before	after	before	after	before	after
#1	202.16	199.70	202.34	204.43	40905.05	40824.67
#2	202.47	193.73	201.95	204.51	40888.82	39619.72
#3	202.35	196.45	202.04	206.09	40882.79	40486.38
#4	202.14	199.89	201.94	204.58	40820.15	40893.5
#5	201.97	198.23	201.94	206.61	40785.82	40956.3
#6	202.12	197.60	202.13	203.10	40854.52	40132.56
#7	201.99	190.30	202.21	201.00	40844.4	38250.3
#8	202.34	187.18	202.25	200.26	40923.27	37484.67
#9	201.92	182.41	202.04	207.60	40795.92	37868.32
#10	202.19	182.17	202.19	201.34	40880.8	36678.11

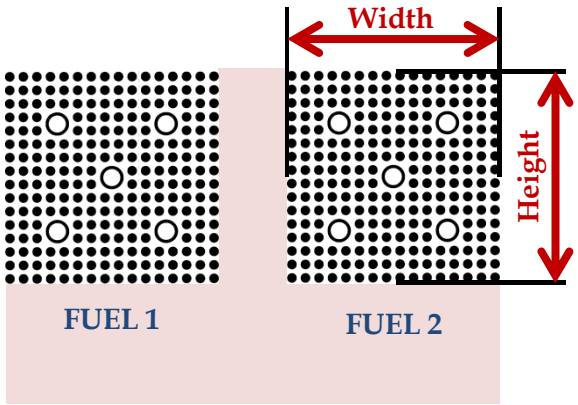

Test Results

Location	T-frame Upper Part Width [mm]	
	before	after
#0	50.86	50.64
#1	49.98	49.98
#2	50.99	50.86
#3	50.80	50.67
#4	50.53	50.37
#5	50.49	50.15
#6	49.34	48.35
#7	50.55	50.04
#8	50.64	50.00
#9	50.26	49.49
#10	50.53	49.58
#11	51.17	50.60

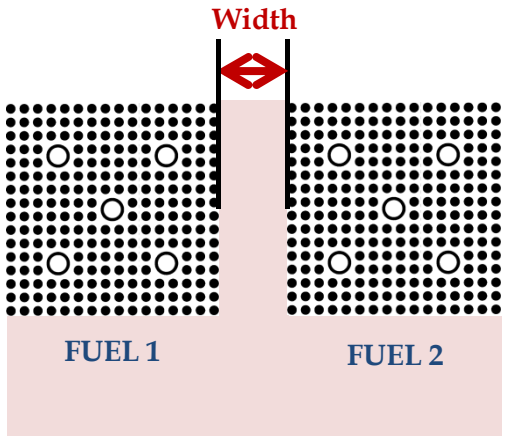

Summary of Structural Evaluation

- Structural Analyses and Structural Drop Tests Met Requirements
- Full Scale Tests were Performed
- Fuel Rods Remained Intact after Drop and Puncture Tests
- Deformations were less than Assumed in Criticality Analysis
- We have demonstrated that the KNF 5 container will ensure the integrity of the fuel assemblies after the worst case hypothetical accident

4. Thermal Evaluation
- Charles Rombough

Description of Thermal Design

- Design Features
  - Main Material: SS304 Stainless steel + Polyurethane foam
  - Polyurethane Foam
    - installed between an outer SS shell and an inner SS shell
    - to reduce heat transfer into the inside of cask during fire accident conditions
  - Designed to maintain structural integrity during fire accident
  - The test and analysis verified that such design features were successful

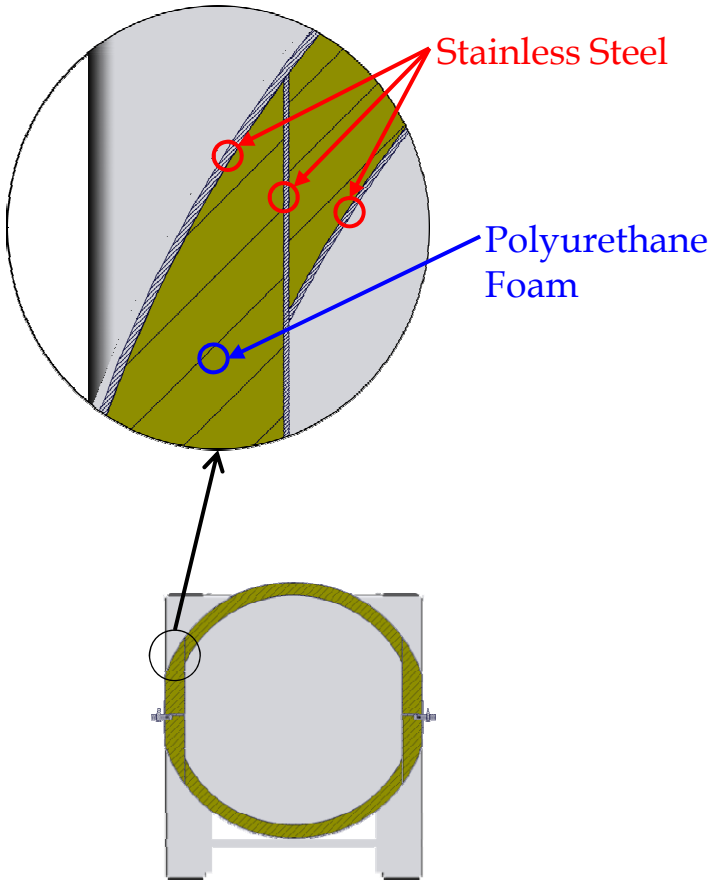

- Decay Heat
  - Only Non-irradiated Nuclear Fuel can be transported (No Decay Heat)

KEPCO NF KEPCO NUCLEAR FUEL COMPANY, LTD. KONES Korea Nuclear Engineering & Service Corp. CTR Technical Services, Inc.

Fire Test

- Fire Test Conditions
  - 30 min at 800°C (≈ 1,475°F) , then natural cool down
  - Test performed on damaged prototype container after drop and puncture tests

- Test Specimen
  - Started with prototype container after 9m drop and 1m puncture tests
  - Container then cut in half at midplane to fit into fire test facility
  - The half with the most damage used for fire test

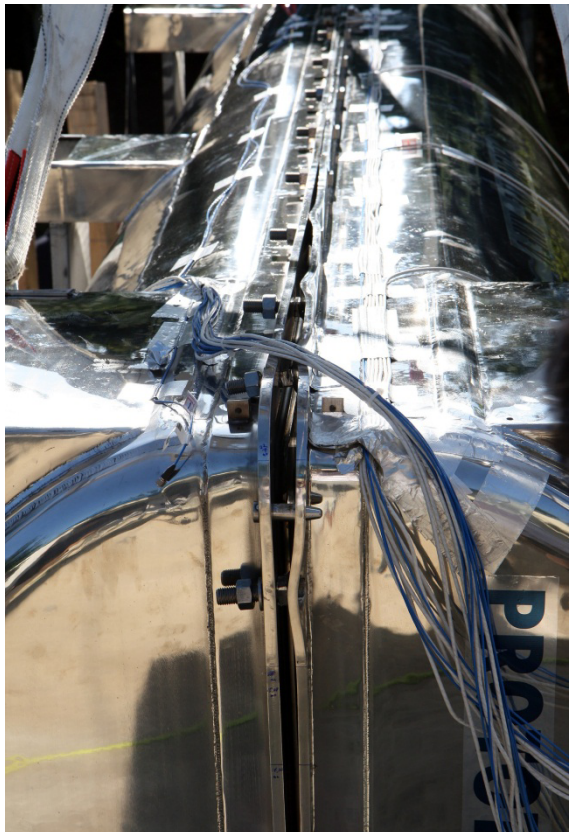

Fire Test

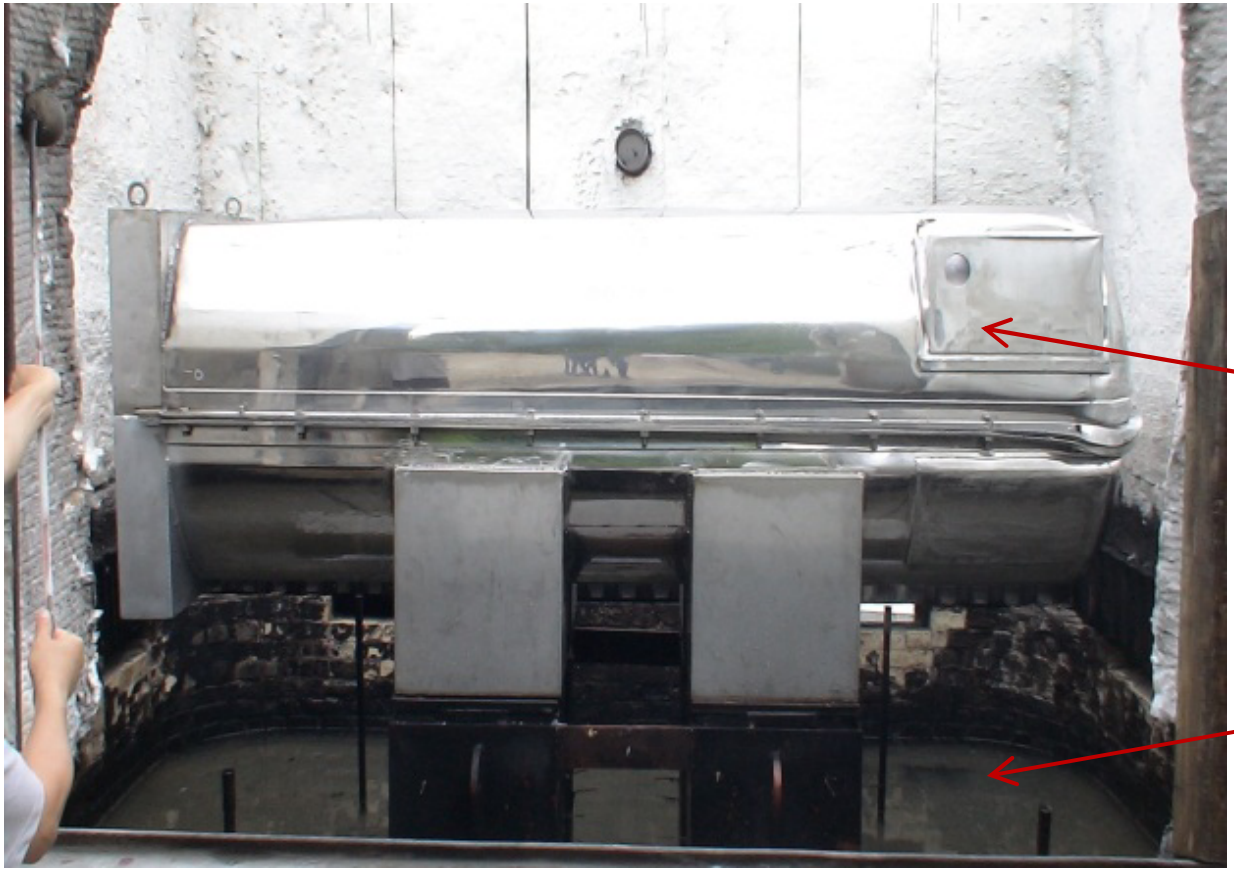

Half Symmetrical Fire Test Specimen

Open Pool Fire with Kerosene Oil

Temperature Measuring Points

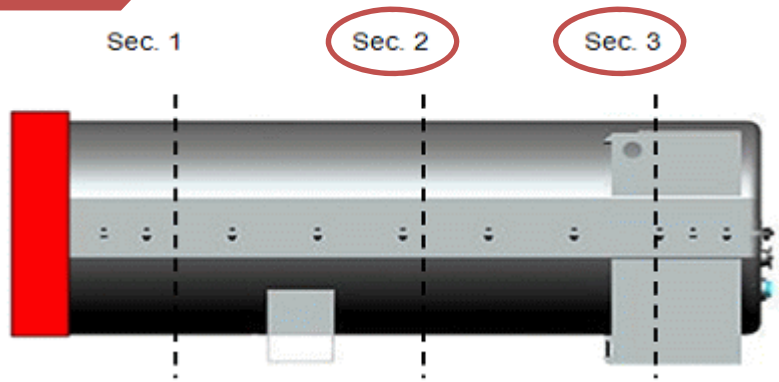

Location(Sec.3)		Location(Sec. 2)	
T-Frame	1	T-Frame	8
	2		9
	3		10
Inner wall	4	Inner wall	11
	5		12
	6		13
	7		14

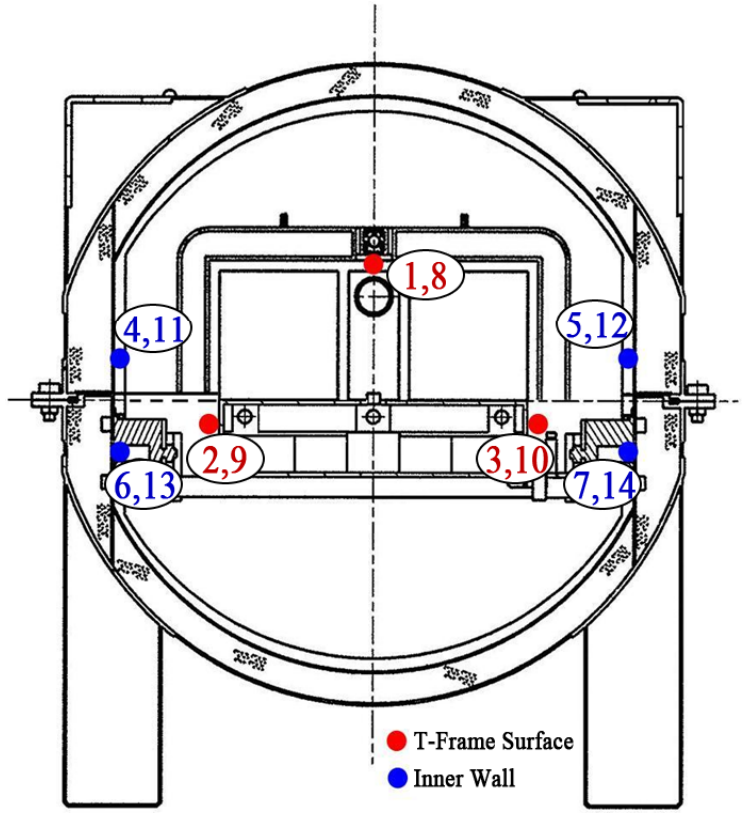

KEPCO NF KEPCO NUCLEAR FUEL COMPANY, LTD. KONES Korea Nuclear Engineering & Service Corp. CTR Technical Services, Inc.

Fire Test

- Fire Test
  - Thermal test was conducted in the fire test facility by using open pool fire method
  - 14 thermocouples were installed at the T-frame and inner-wall surface
  - The duration of the fire test was actually 34 min at an average temperature of 890 °C (≈ 1,634 °F)

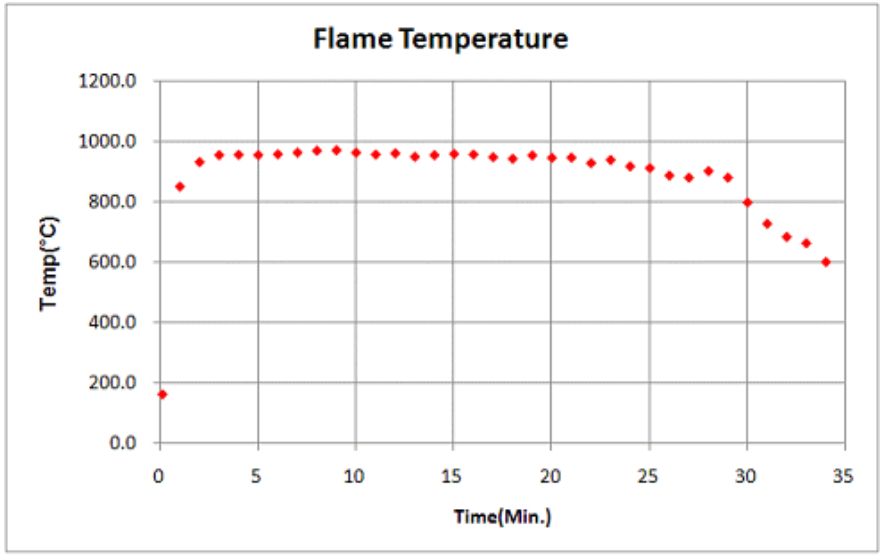

Fire Test

- Inner Wall Temperature

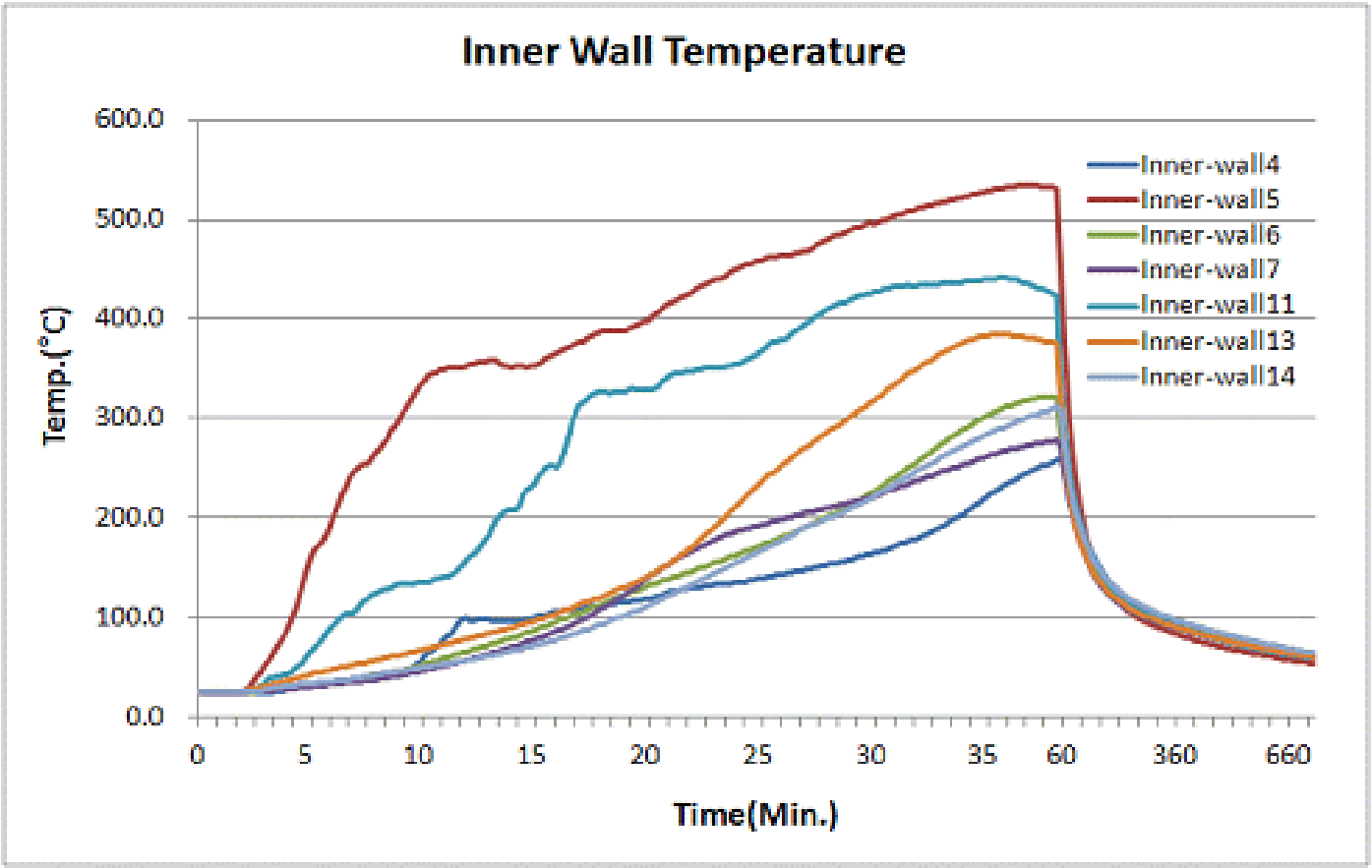

Fire Test

- T-Frame Temperature

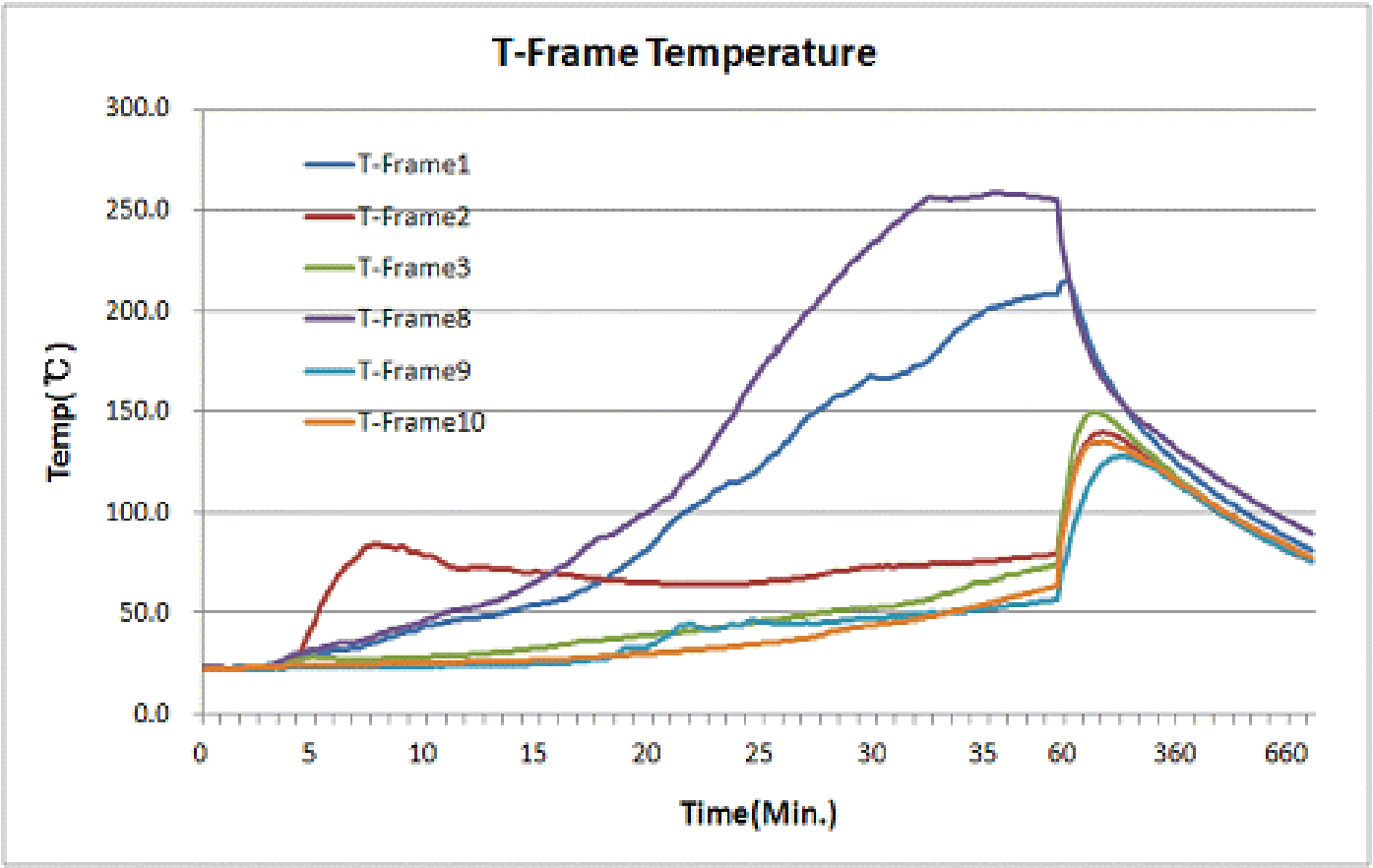

Summary of Fire Test Results

- Summary Table of Temperatures

Materials	Limiting Temperature [°C (°F)]	Measured Temperature [°C]
Uranium Dioxide	2,805 (5,081): Melting Point	< 260
ZIRLO	1,850 (3,362): Melting Point	< 260
SS304	1,400 ~ 1,455 (2,552 ~ 2,651): Melting Point	**890**
Polyurethane Foam	Not Important	**< 890**
NR Series Rubber (Shock Absorber)	Not Important	**< 540**
Alloy 718	1,148 ~ 1,336 (2,098 ~ 2,437): Melting Point	**< 260**

- Temperatures of structural components are below the limiting temperature
- Therefore, the thermal integrity of the package is maintained.

Fire Test

- Fire Test Results
  - The highest fuel cladding temperature was < 260 °C
  - This temperature is lower than the normal reactor operating temperature
  - Consequently, the fuel assemblies will maintain their structural integrity and criticality safety

Thermal Analysis

- Thermal Analysis Conditions
  - Normal Conditions of Transport
    - The temperature of the package will not be greater than the surrounding temperature because only non-irradiated nuclear fuel is transported (no decay heat)
    - Therefore, thermal evaluation for normal conditions is not necessary
  - Hypothetical Accident Assumptions

	External Temperature [°C (°F)]	**Insolation** [W/m^2]	**Decay Heat**
Initial Condition	26.9 (80.42)	Insignificant	None
30 min Fire Phase	800 (1,475)	Insignificant	None
Cool Down Phase	26.9 (80.42)	Insignificant	None

Thermal Analysis

- Thermal Analysis Model
  - Analysis Code: ANSYS FLUENT 6.3 Version
  - Quarter Symmetrical Divided Model
  - Transient Heat Transfer Problem

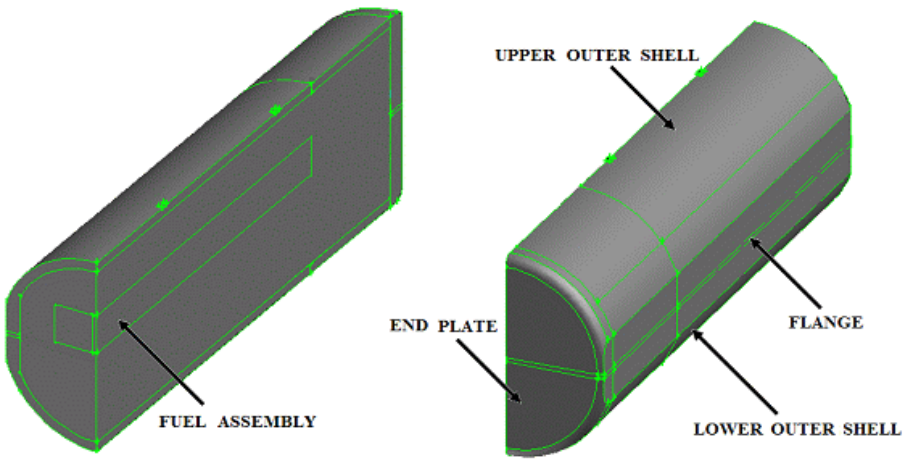

[Geometrical Structure of Analysis Model]

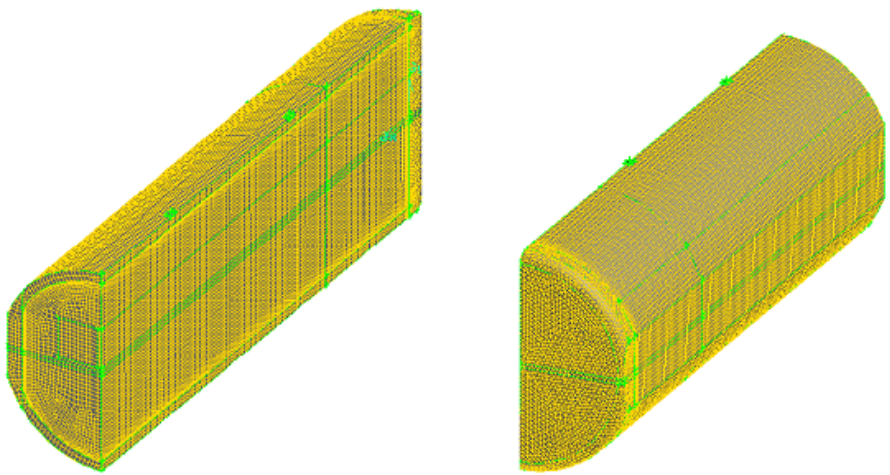

[Mesh Structure of Analysis Model]

Thermal Analysis

- Thermal Analysis Results
  - The temperature of the outer shell surface quickly increases and reaches equilibrium with the flame
  - The internal structures are gradually heated due to the insulation effect of the polyurethane foam
  - The internal temperature calculated is lower than the fuel cladding temperature (<310 °C (≈ 585 °F)) at normal reactor operating conditions.

Thermal Analysis

- Package with Plus7 Fuel Assemblies

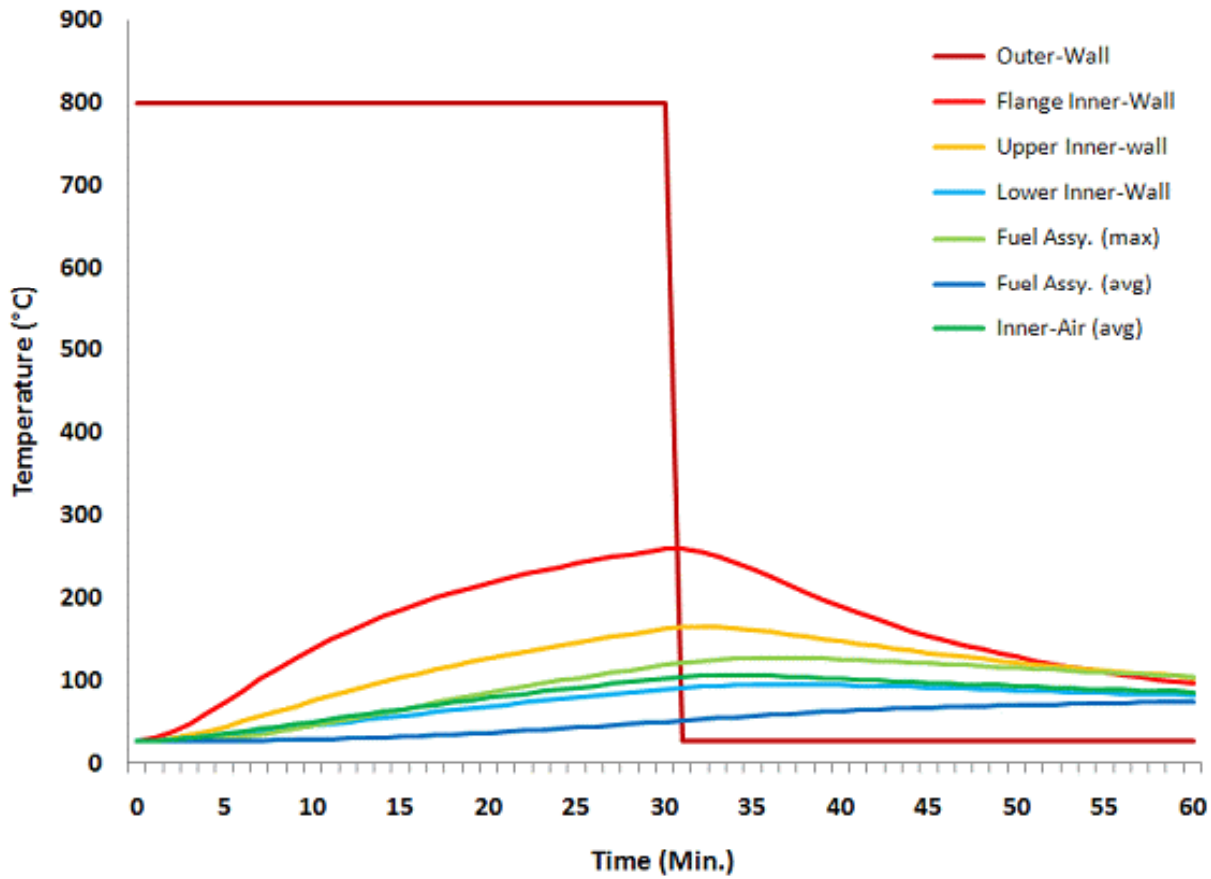

Thermal Analysis

- Package with 16ACE7 Fuel Assemblies

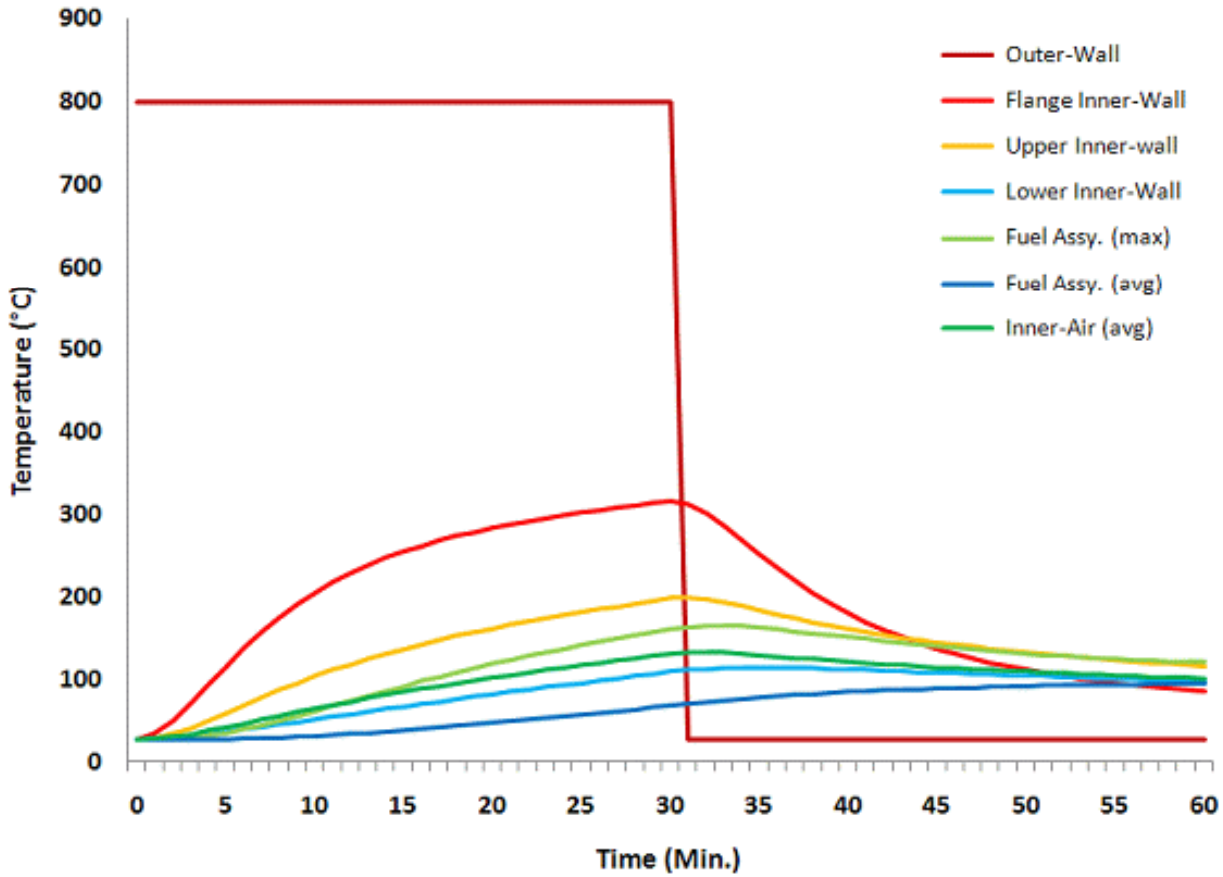

Thermal Analysis

- Package with 17ACE7 Fuel Assemblies

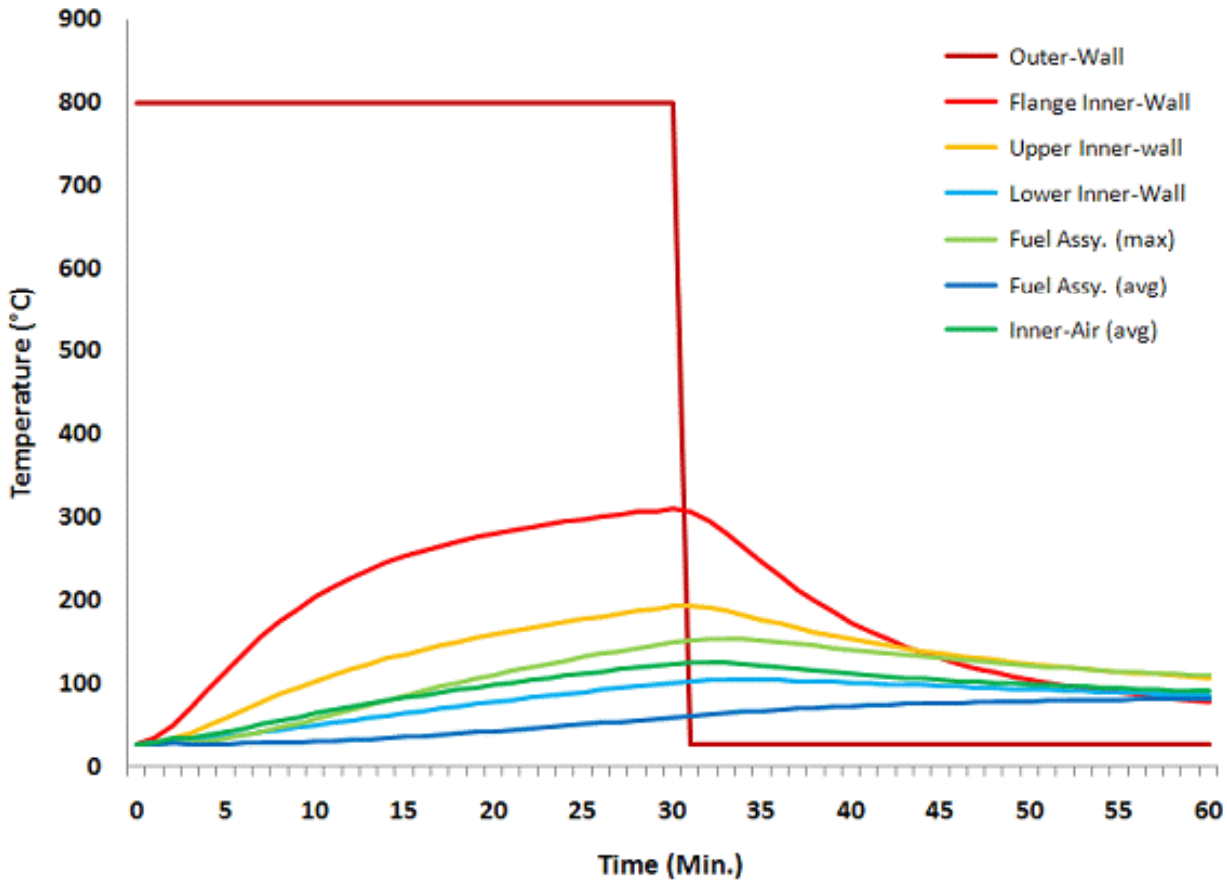

Summary of Results

- Thermal test and analysis was performed in accordance with 10 CFR 71
- Fire test was actually performed for 34 min at an average temperature of 890 °C (≈ 1,634 °F)
- The highest internal temperature is much lower than the normal reactor operating temperature of ≈ 310 °C
- The internal structures including new fuel assemblies will maintain their integrity and criticality safety

05. Criticality Evaluation
Dale Lancaster

KEPCO NF
KEPCO NUCLEAR FUEL COMPANY, LTD.
KONES
Korea Nuclear Engineering & Service Corp.
CTR Technical Services, Inc.

Criticality Evaluation

- Design Features
  - Main Material: SS304 Stainless steel + Polyurethane foam
  - Neutron Absorber: B4C/AL (MMC: Metal Matrix Composite), 0.02g B-10/cm^2

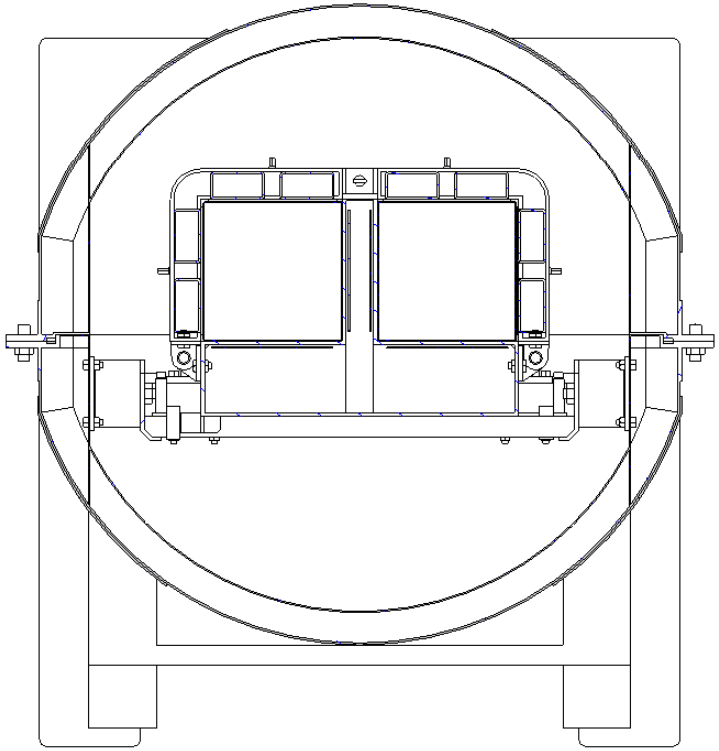

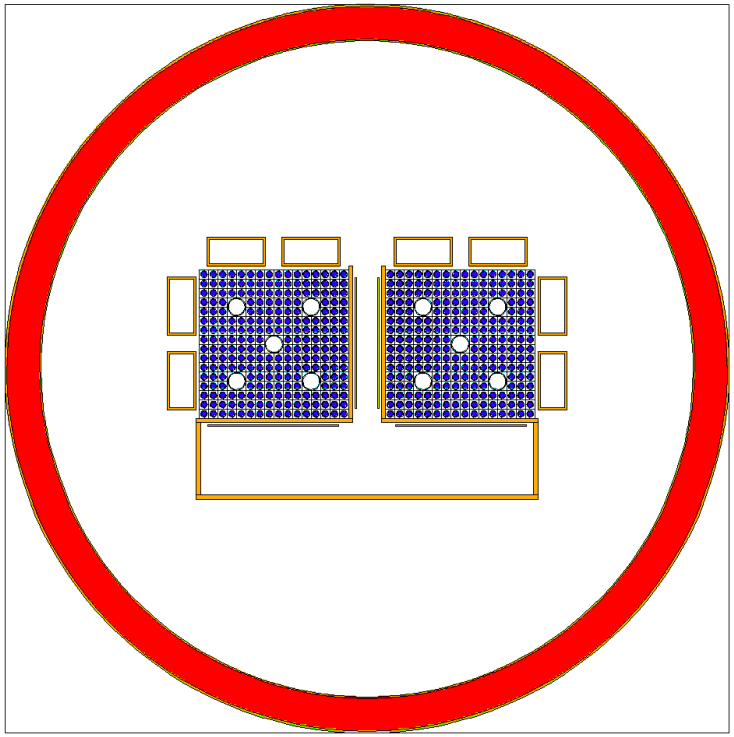

Criticality Evaluation

- Design Features
  - Main Components :
    - Internal/External Shell
    - Polyurethane foam
    - T-frame
    - Rectangular tubes (Clamping Lids)
    - 4 Neutron Absorbers
    - L-Shape Aluminum Plates

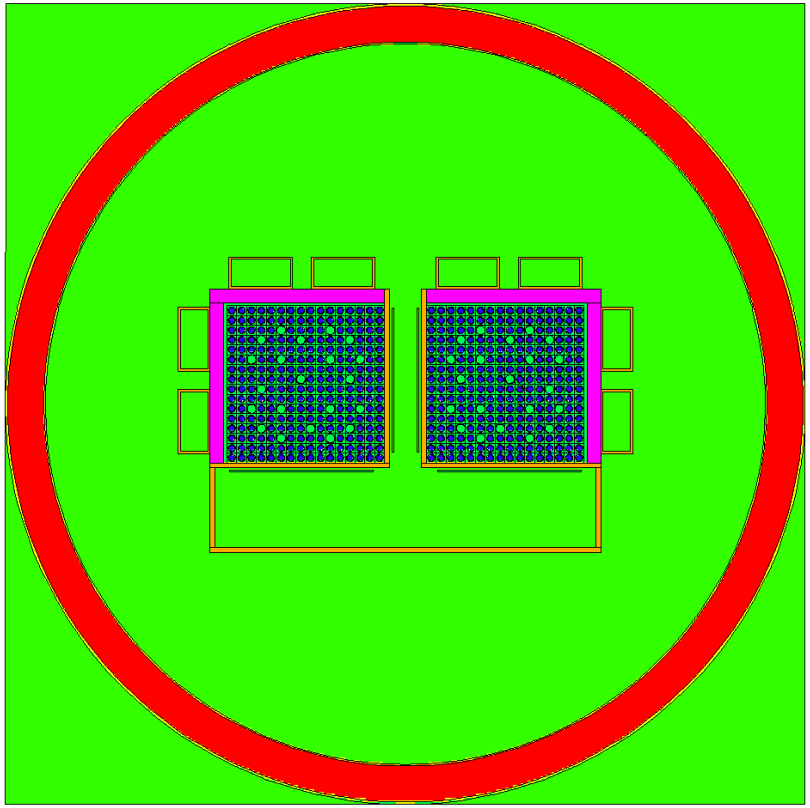

Criticality Evaluation

- Nuclear Fuel Assemblies
  - KNF 5-L: PLUS7 [CE-Type] and 236 Individual Fuel Rods
  - KNF 5-S: 17ACE7, 16ACE7, 14OFA [WH-Type]

Item	PLUS7	17ACE7	16ACE7	14OFA
Fuel Assembly Width [mm]	207.07	215.04	198.2	198.2
Pitch [cm]	1.28524	1.25984	1.2320	1.41224
Fuel Rod Array	16x16	17x17	16x16	14x14
Number of Fuel Rods	236	264	235	179
Active Fuel Length [cm]	381.0	365.76	365.76	365.76
Pellet OD [cm]	0.8191	0.8191	0.7844	0.8748
Clad Material	ZIRLO	ZIRLO	ZIRLO	Zircaloy-4
Clad ID [cm]	0.83566	0.83566	0.8001	0.8926
Clad OD [cm]	0.9499	0.9499	0.9144	1.0160
GT ID [cm]	2.2860	1.1230	1.1060	1.2497
GT OD [cm]	2.4890	1.2040	1.1960	1.3360
Mass of U (modeled[kg])	430.75	462.57	377.617	357.74

Criticality Evaluation

- Results of Criticality Evaluation
  - Scale 4.4 (KENO Va)
  - Initial Enrichment: 5 wt%
  - UO2 Density: 10.313 g/cm3 [94.1% of theoretical density 10.96 g/cm3]
  - Areal Density of Neutron Absorber: 0.020g B-10/cm^2 [90% of Minimum Areal Density of 0.022]
  - Overall Bias and Uncertainty: 0.01397 Δk
  - $k_{eff} = k(calc) + \Delta k(bias) + \Delta k(uncert)$

Fuel Type	Effective Multiplication Factor(k_{eff})		
	Normal Condition(Dry)	Submergence Condition	Accident Condition (increased pin pitch)
PLUS7	0.55690	0.87213	0.88483
17ACE7	0.58154	0.89628	0.90920
16ACE7	0.52045	0.84870	0.86145
14OFA	0.51350	0.85942	0.86943

Criticality Evaluation

- Results of Criticality Evaluation
  - Optimum moderation condition

Computer Code	Water Density [g/cm3]	Effective Multiplication Factor (keff)
SCALE 4.4 (CSAS25)	0.001	0.55628±0.00020
	0.005	0.54100±0.00025
	0.01	0.52307±0.00022
	0.02	0.49149±0.00021
	0.05	0.42465±0.00026
	0.10	0.37288±0.00027
	0.15	0.36642±0.00025
	0.20	0.38294±0.00025
	0.30	0.44561±0.00032
	0.40	0.51754±0.00035
	0.50	0.58725±0.00036
	0.60	0.65189±0.00038
	0.70	0.71053±0.00034
	0.80	0.76422±0.00038
	0.90	0.81250±0.00038
	1.00	0.85816±0.00035
MCNP4B	1.00	0.85698±0.00036

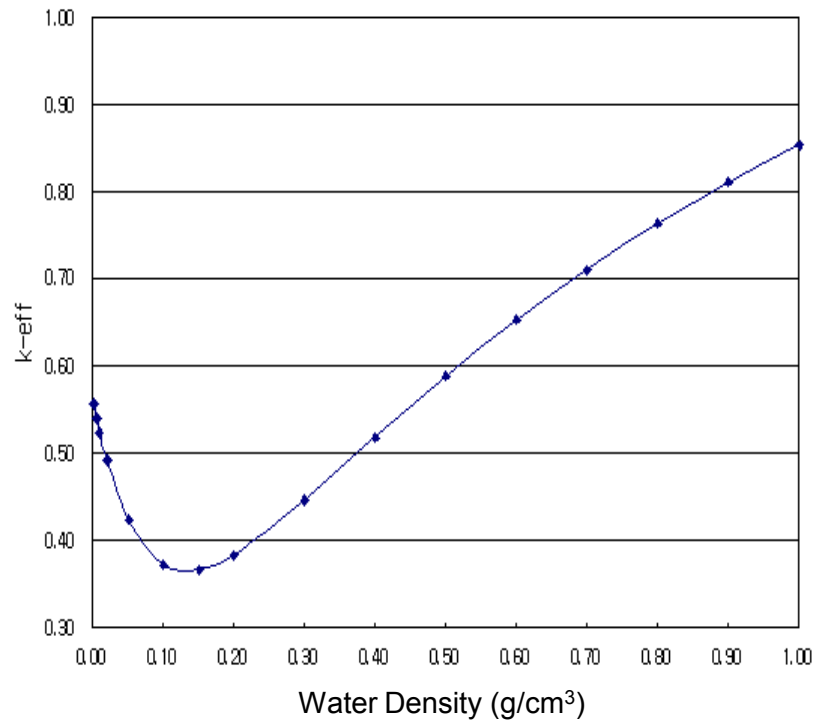

Criticality Evaluation

- Results from Criticality Experiments
  - Based on the ICSBEP Database: 91 experiments
  - LEU-COMP-THERM Series 010, 016, 017

Code	Average Effective Multiplication Factor	Bias (1 - kcal)	Uncertainty ($2\sigma_{exp}$)
SCALE	0.99779	+0.0022	0.00772
MCNP	0.99747	+0.00253	0.00614

$$\Delta k_{eval} = \Delta k(bias) + \Delta k(uncert) = \Delta k(bias) + 2\sqrt{\sigma_{exp}^2 + \sigma_{calc}^2 + \sigma_{tol}^2}$$

Code	keval	Bias	$2\sigma_{exp}$	$2\sigma_{calc}$	$2\sigma_{tol}$
SCALE	0.01397	+0.0022	0.00772	0.00070	0.00888
MCNP	0.01335	+0.00253	0.00614	0.00072	0.00888

Criticality Evaluation

- Fabrication tolerances
  - Reference Model:
    PLUS7 Fuel, SCALE, Full Submergence condition, kref = 0.85816

Input Data	Nominal Values	Tolerance	Values Applied	keff	Δk
T-frame - Minimum gap of side walls - Maximum Thickness	4.0 cm 0.6 cm	-0.04 cm +0.05 cm	3.96 cm 0.65 cm	0.85889 0.85938	0.00073 0.00114
Rectangular Supporting Tube - Minimum Thickness	0.3 cm	-0.03 cm	0.27 cm	0.86008	0.00192
Fuel Pellet - Maximum Density - Maximum Diameter	10.313 g/cm3 0.81915 cm	+2% +0.00127 cm	10.519 g/cm3 0.82042 cm	0.86073 0.85836	0.00257 0.00020
Fuel Rod Pitch - Maximum Pitch	1.28524 cm	+0.0127 cm	1.29794 cm	0.86596	0.00780
Cladding Outer Diameter - Minimum	0.94996 cm	+0.00381 cm	0.95377 cm	0.86003	0.00187
Neutron Absorber Sheets - Minimum Width - Minimum Thickness	18.0 cm 0.2 cm	-0.2 cm -0.01 cm	17.8 cm 0.19 cm	0.85903 0.85944	0.00087 0.00128
Δktol					0.00888

Criticality Evaluation

- Criticality Margin
  - Areal Density of Neutron Absorber 0.015g B-10/cm2 [75% of Modeled Areal Density]

Fuel Type	Effective Multiplication Factor (keff)	
	Neutron Absorber Boron Concentration 0.015 g B-10/cm2	
	SCALE4.4	MCNP4B
PLUS7	0.87548	0.87327
17ACE7	0.89886	0.89510
16ACE7	0.85195	0.85117
14OFA	0.86310	0.86148

Criticality Evaluation

- Criticality Margin
  - Areal Density of Neutron Absorber 0.020g B-10/cm2
  - 2 or 0 sheets

Fuel Type	Effective Multiplication Factor(keff)		
	4 Sheets of N. A.	2 Sheets of N. A.	No N. A.
PLUS7	0.85816 ±0.00035	0.88086 ±0.00038	0.93254 ±0.00043
17ACE7	0.88231 ±0.00042	0.89835 ±0.00042	0.95402 ±0.00040

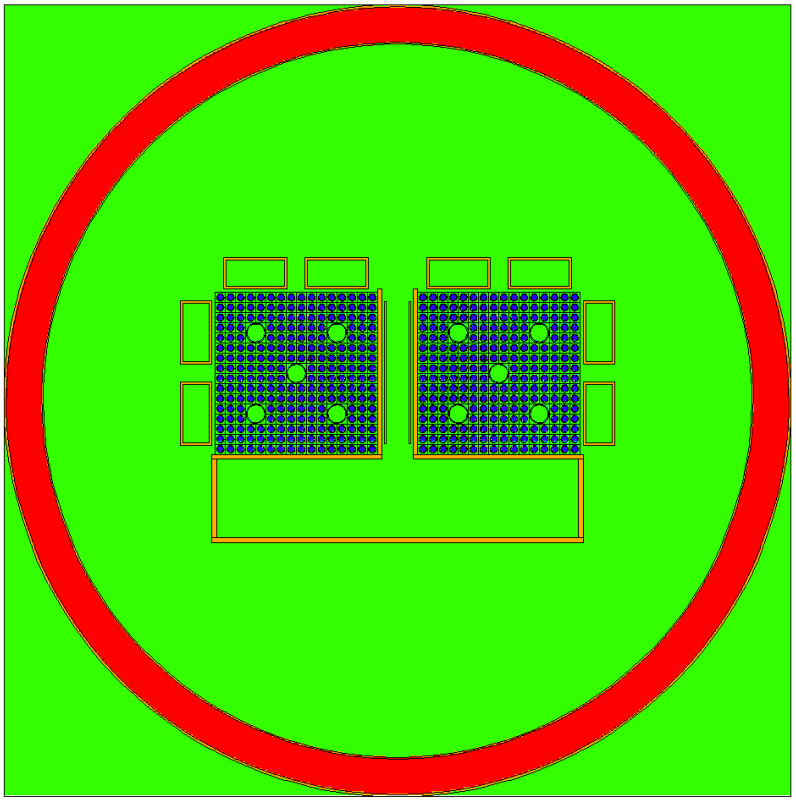

Fuel Rod Case

- Results of Criticality Evaluation
  - Optimum moderation condition

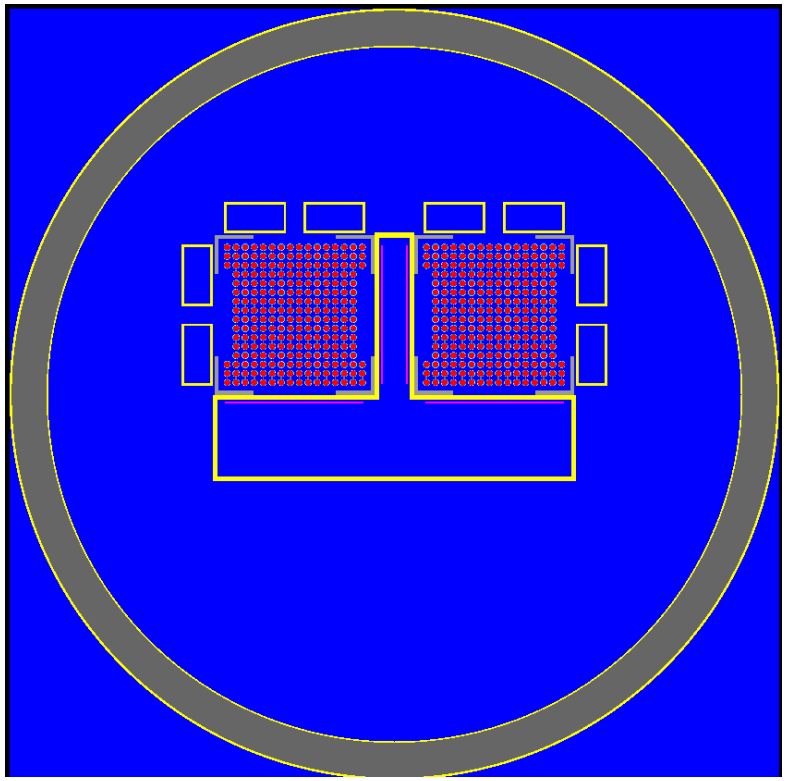

Water Density [g/cm3]	Effective Multiplication Factor (keff)
0.001	0.54093±0.00021
0.005	0.52356±0.00023
0.01	0.50358±0.00020
0.02	0.47089±0.00020
0.05	0.40890±0.00024
0.10	0.36472±0.00020
0.15	0.35610±0.00026
0.20	0.36638±0.00023
0.30	0.41099±0.00024
0.40	0.46583±0.00029
0.50	0.52103±0.00030
0.60	0.57411±0.00033
0.70	0.62424±0.00032
0.80	0.67062±0.00037
0.90	0.71463±0.00037
1.00	0.75549±0.00035

Summary of Criticality Evaluation

- Highest calculated k-eff under accident condition is < 0.91
- Large margin to the regulatory limit of 0.95
- We have demonstrated that the KNF 5 container with the most reactive fuel assemblies will remain substantially subcritical

06. Package Operations
- Charles Rombough

Container Loading

- **Preparation for Loading**
  - **Remove the T-bolts and separate the upper and lower shell of the empty container**
  - **Clean the inner and outer parts of container**
  - **Visually inspect the inner structure and shock absorber condition**
  - **Adjust the clamping frame for fuel assembly type and retract the pad for loading the fuel assemblies**
  - **Install the 2 types of accelerometers verified by QA**

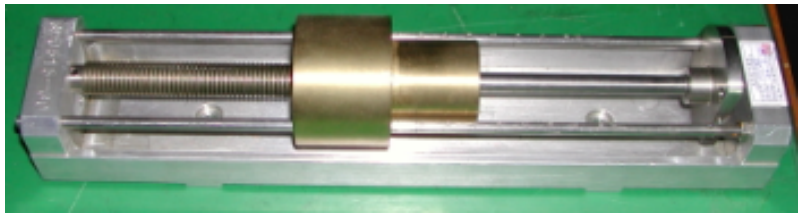

Accelerometer

Container Loading

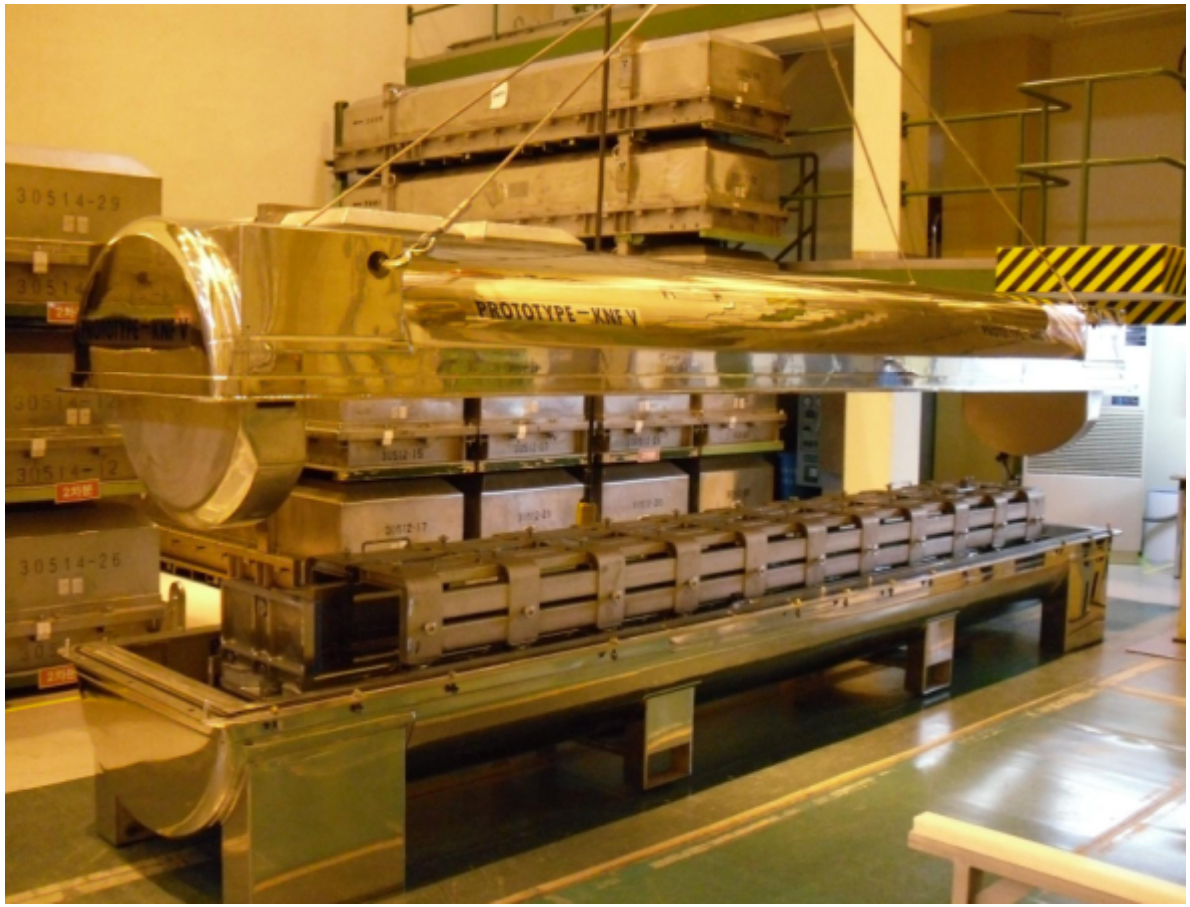

Container Loading

Container Loading

- **Loading fuel assembly**
  - **Stand the T-frame upright and support it using the support bar**
  - **Remove the ball lock pin and open the clamping lid**
  - **Load the 2 fuel assemblies**
  - **Close the clamping lid**
  - **Lower the T-frame to the horizontal position**
  - **Tighten the clamping pad to the grids of the fuel assembly with clamping screws**
  - **Install the upper shell and Fasten the T-bolts**

- **Preparation for Transportation**
  - **Load 3~4 containers on a truck using the crane**

Container Loading

Container Loading

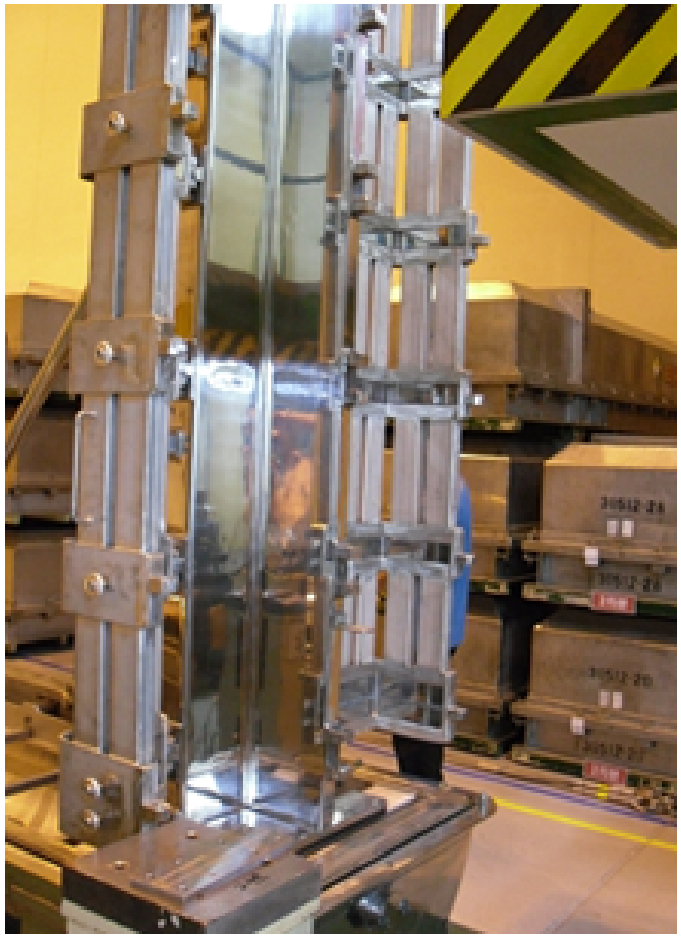

Container Loading

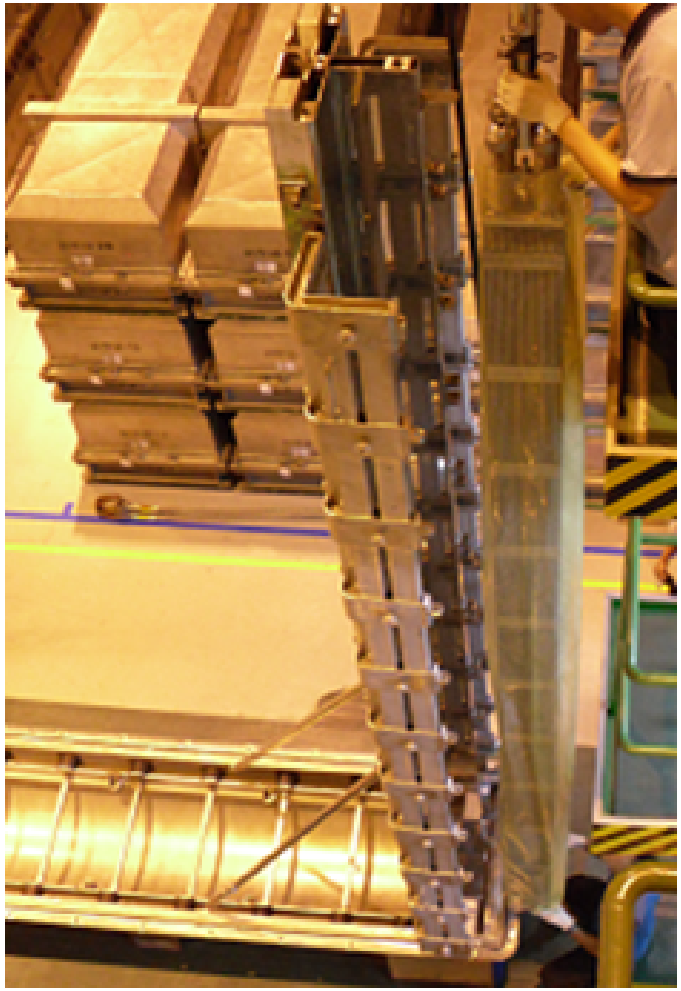

Container Unloading

- **Unloading the container**
  - Unload the containers from the truck by procedure
  - Inspect for surface contamination by procedure

- **Unloading the fuel assembly**
  - Remove the T-bolts
  - Separate the upper and lower shells
  - Release the hinge bolts
  - Raise the T-frame to vertical position
  - Set up the support bars
  - Remove the lid lock pin and open the clamping lids
  - Take out the fuel assemblies
  - Remove the T-frame support bars
  - Lower the T-frame to horizontal position
  - Complete the clamping and install the upper shell

Container Unloading

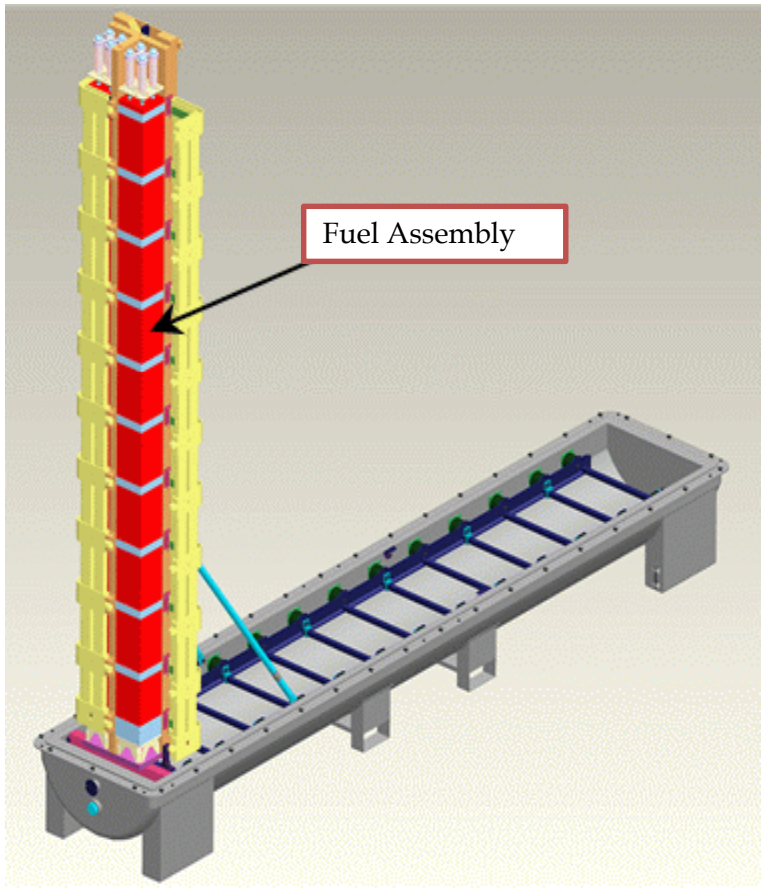

Container Unloading

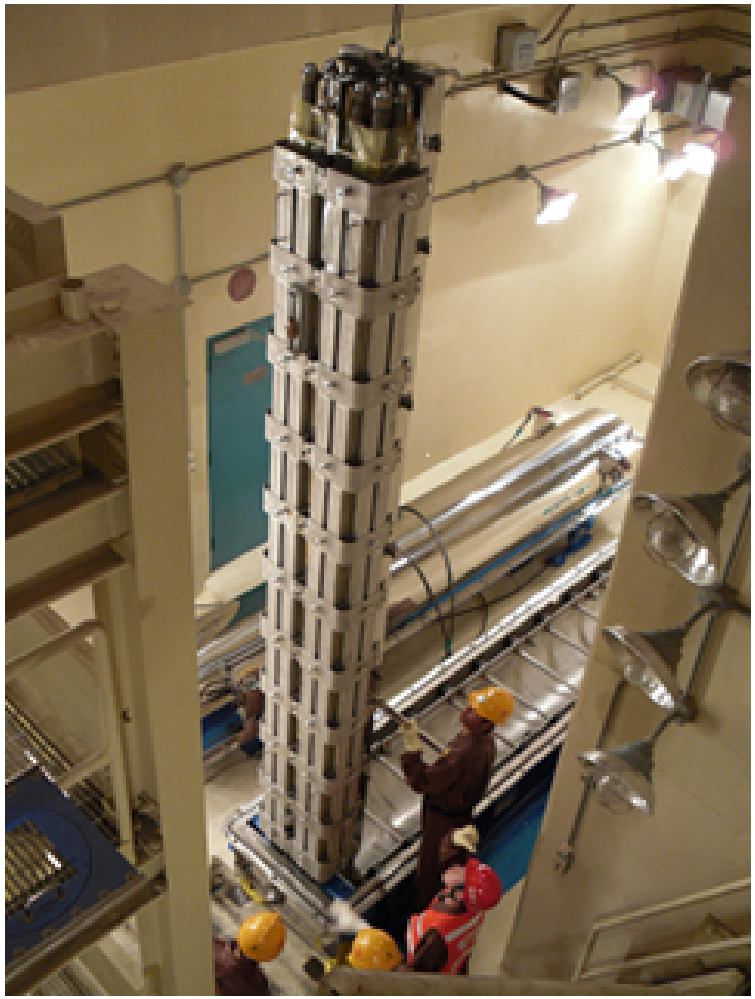

07. Acceptance Test and Maintenance Program - Charles Rombough

KEPCO NF
KEPCO NUCLEAR FUEL COMPANY, LTD.
KONES
Korea Nuclear Engineering & Service Corp.
CTR Technical Services, Inc.

Acceptance Test

- 10 CFR 71.85 (c)
- Visual inspections and measurements
- Weld examinations
- Component and material tests
  - Polyurethane foam
    - Mechanical properties/ Flame retardant characteristics/ Water absorption
    - Thermal properties/ Chemical composition
  - Neutron poison plates
    - Minimum Areal density of B-10 in borated aluminum: 0.022 gm/cm^2
    - Uniform distribution of boron carbide particles in the alloy with 95% confidence level and 95% probability
- No structural and pressure tests: No component needs structural and pressure tests
- No leak tests required for fresh fuel: 10 CFR 71.55 (b)
- No Shielding Tests required: Non-irradiated and low-enriched uranium
- No Thermal Test required: No Decay Heat

Maintenance Program

- Visual inspection for shipping container prior to use
- Inspections for individual components prior to use
  - If any defects are found during inspection, the container will be segregated and repaired by standard site procedure before its next use.
  - Component and material tests
    - Fasteners: Inspection prior to use, damaged components to be replaced
    - Shock absorber: Visual inspection prior to first use or every five years
  - No structural and pressure tests: No component needs structural and pressure tests
  - No leak tests required: 10 CFR 71.55 (b)
  - No Thermal Test required: No Decay Heat

08. Conclusions

Conclusions

- The KNF 5-L and 5-S have been licensed by the Korean regulatory authority (KINS)
- Containers are being manufactured for use in Korea
- First containers will be finished 1st Quarter, 2012
- Design has been analyzed for structural, thermal, and criticality properties
- Full scale Prototype passed drop and fire tests
- All requirements of 10CFR71 have been shown to be met
- Performed
  - Structural Analyses (Normal Conditions of transport + 16 Accident cases)
  - Structural Tests (15° Flange side Oblique Drop: Case of Maximum Stress on FA)
  - Thermal Analyses (Accident case)
  - Thermal Tests (34 min. fire) (large margin demonstrated)
  - Criticality Analyses (large margin demonstrated)

Conclusions

- Westinghouse manufactured fuel rods will be shipped to Korea in 2014 so that KNF can make fuel assemblies for UAE
- Need KNF-5 shipping containers to transport the fuel rods
- KNF will submit a license application before end of August, 2011
- To provide lead time for manufacturing, license needed before 2013

KNF 5-L/S (KEPCO NF)
: The Fresh Fuel Shipping Containers

NRC/ KEPCO NF / KONES / CTR Meeting

Washington D.C., July 07, 2011

KEPCO NF
KEPCO NUCLEAR FUEL COMPANY, LTD.

KONES
Korea Nuclear Engineering & Service Corp.

CTR Technical Services, Inc.

One Other Question
- Yong Hoon Lee

Proposed Design Modification

- KNF 5-L/S Fresh Fuel Shipping Containers acquired License on Jan. 2010 from Korean Regulatory Authority: KINS

- Confronted with Difficulties on Manufacturing
  - Large amount of Welding resulting in excessive distortions

- Proposed Design Modification on KNF 5-L/S
  - Proposed Modification is limited to the T-frame and Clamping Lids
  - Performed Structural Analysis on Proposed Design

Comparisons

- Current Design
  - Weld on Clamping Lids

Comparisons

- Design Comparisons

Current Design of Clamping Lids

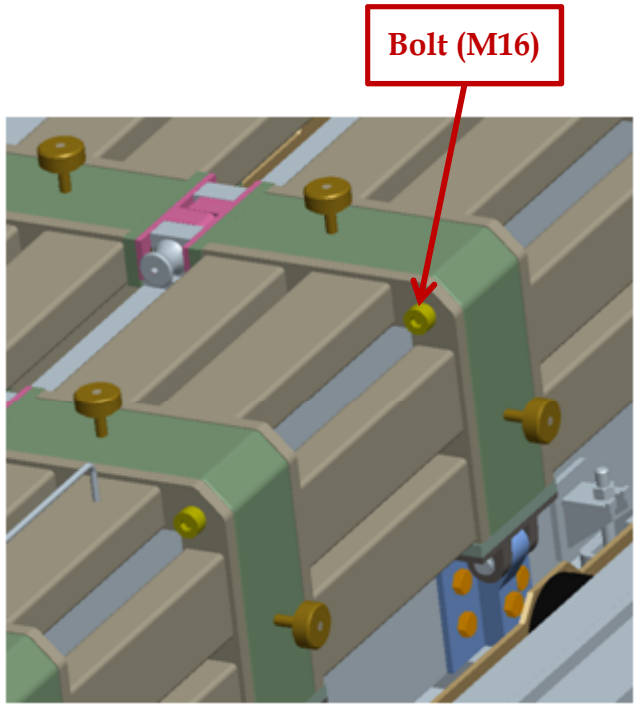

Proposed Design of Clamping Lids

Comparisons

- Details of Proposed Design

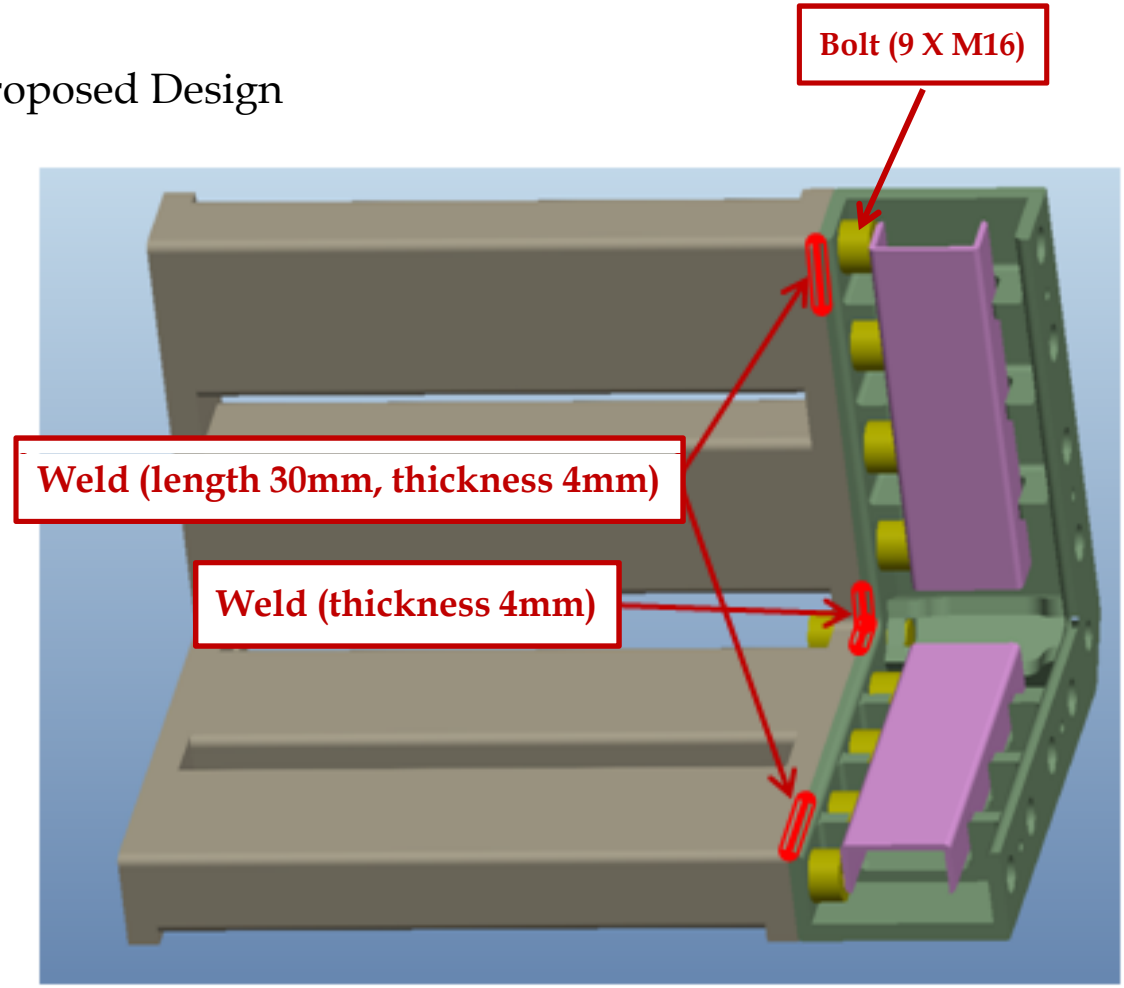

Comparisons

- Details of Proposed Design

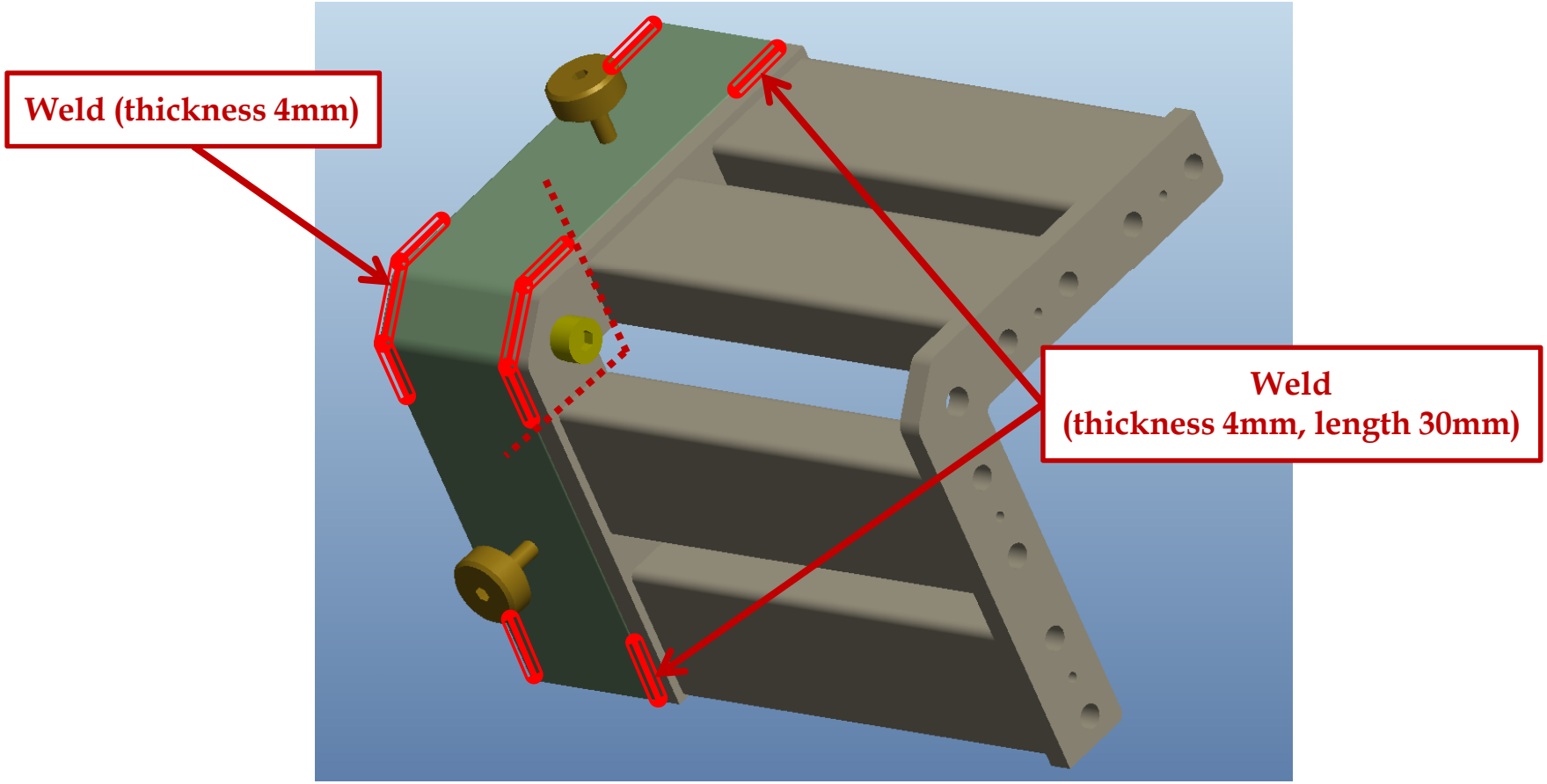

Comparisons

- Design Comparisons

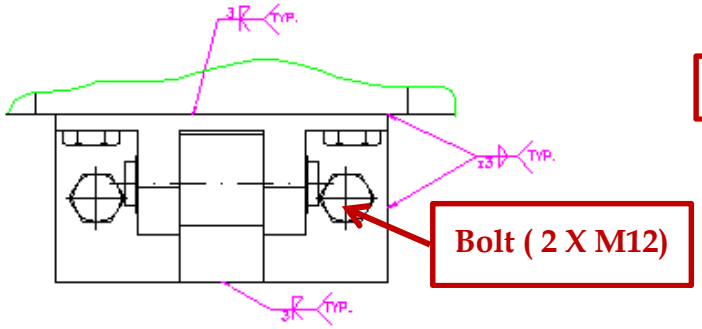

Current Design of Lid Hinge

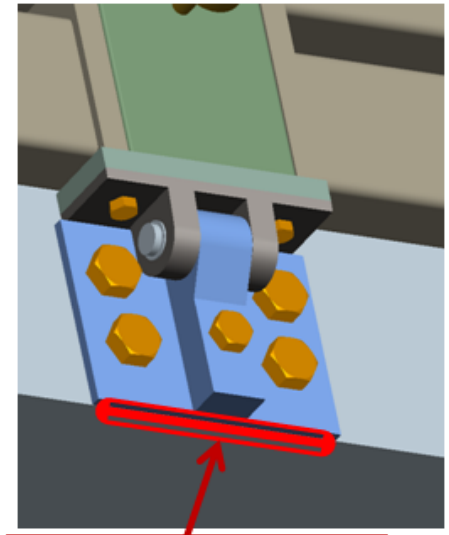

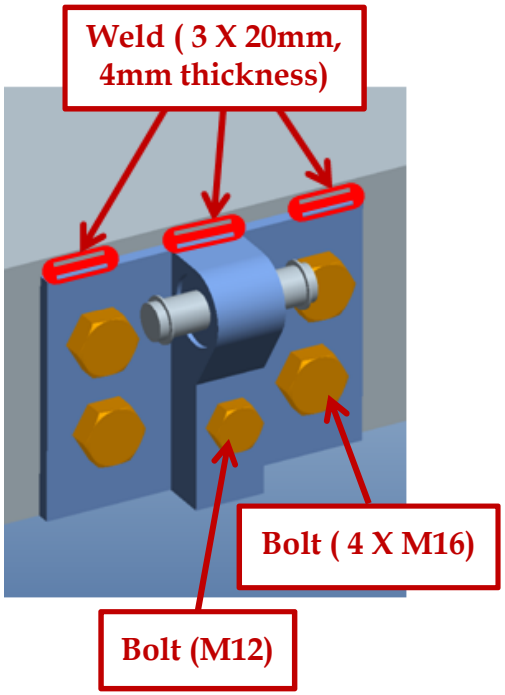

Proposed Design of Lid Hinge

Comparisons

- Inside of T-frame of Proposed Design (Hinge Stiffener)

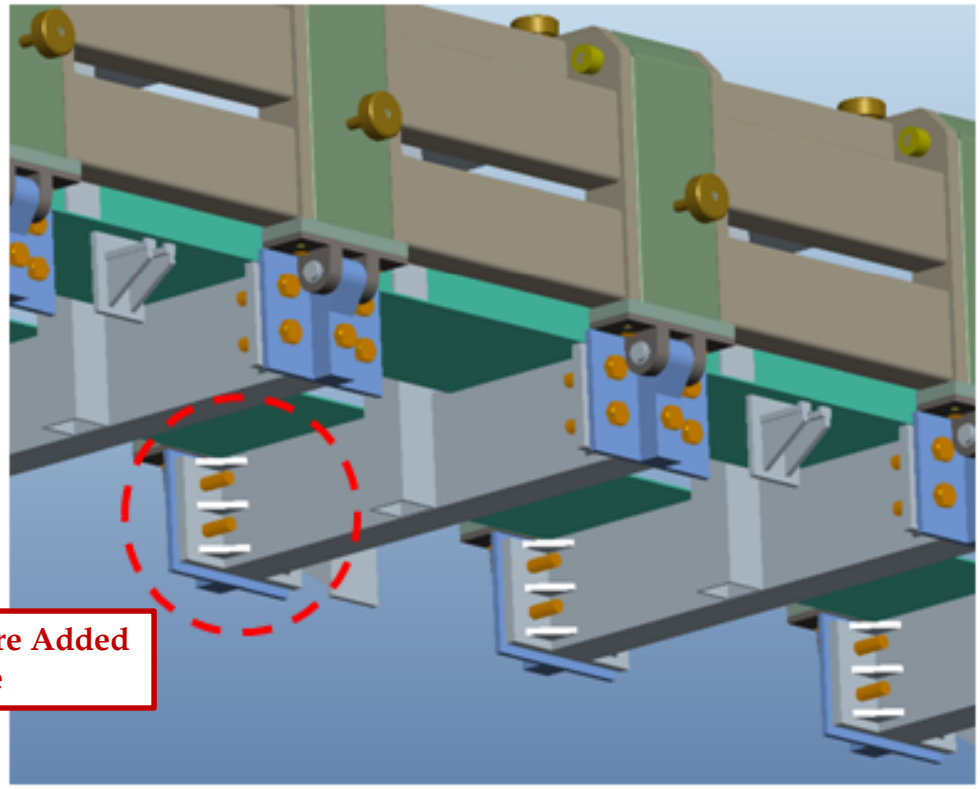

Hinge Stiffeners are Added inside the T-Frame

Robustness of Added Bolts

- Evaluation Criteria (ASME B&PV Code Sec.III, Div.3, WB-3230 "Stress limits for bolts")
  - Axial Stress: Min($3S_m$, $0.7S_u$) = 602 MPa (87.3 ksi)
  - Shear Stress: Min($0.42S_u$, $0.6S_y$) = 361.2 MPa (52.4 ksi)

for ASTM A193M Class 2 B8 Stainless Steel Bolts

- Clamping Lid Bolts
  - Maximum Axial Stress @ Upside-down Fuel Top 15° Drop
    : 376 MPa (54.5 ksi) → 62.5% of Limit
  - Maximum Shear Stress @ Upside-down Fuel Top 45° Drop
    : 322 MPa (46.7 ksi) → 89.2% of Limit

- Hinge Base Plate Bolts
  - Maximum Axial Stress @ Upside-down Fuel Bottom 15° Drop
    : 168 MPa (24.4 ksi) → 27.9% of Limit
  - Maximum Shear Stress @ Flange-side Fuel Bottom 15° Drop
    : 332 MPa (48.2 ksi) → 92.1% of Limit

Stress on Fuel Assemblies

- All 16 accident cases were analyzed for the proposed design modification
- All the calculated stresses for the proposed design were acceptable
- The worst case drop for the proposed design was the Flange Side Down Fuel Top 9m Drop at 15°, the same as the current design
- For the worst case, the maximum stress on the fuel rods for the proposed design was less than 15 MPa compared to 20 MPa for the current design

Questions on Design Modification

- Performed Structural Analysis on 16 Cases of Hypothetical Accident Conditions
  - 15 Cases on Free Drop Analysis
  - 1 Case on Puncture Analysis

- <u>Structural Test is Not Planned</u>

- Can the proposed design modification be licensed without Performing Structural Test?