A1.1.A SRO and RO Conduct of Operations ADMIN G2.1.7

TITLE: Critical Safety Function Status Tree Evaluation.

EVALUATION LOCATION: ☐ SIMULATOR ☐CONTROL ROOM ☒CLASSROOM

PROJECTED TIME: 10 MIN SIMULATOR IC NUMBER: N/A

☐ ALTERNATE PATH ☐ TIME CRITICAL ☐ PRA

JPM DIRECTIONS:

1. Initiation of task may be in group setting, evaluation performed individually upon completion.
2. Requiring the examinee to acquire the required materials may or may not be included as part of the JPM.

TASK STANDARD: Upon successful completion of this JPM, the examinee will:

- Correctly assess and determine the status of ALL CSFs and then determine which FRP is required to be implemented using FNP-1-CSF-0.0.

Examinee:		
Overall JPM Performance:	**Satisfactory** ☐	**Unsatisfactory** ☐
Evaluator Comments (attach additional sheets if necessary)		

EXAMINER: _____

Developer	Billy Thornton	Date: 2/7/2011
NRC Approval	SEE NUREG 1021 FORM ES-301-3	

CONDITIONS

When I tell you to begin, you are to MONITOR AND EVALUATE CRITICAL SAFETY FUNCTION STATUS TREES. The conditions under which this task is to be performed are:

a. Unit 1 tripped from 100% power.
b. A Safety Injection occurred 30 minutes ago.
c. The crew is performing actions in EEP-1, Loss of Reactor or Secondary Coolant.
d. The SPDS computer is **NOT** available for monitoring Critical Safety Functions.
e. You have been directed to manually monitor the Critical Safety Functions using CSF-0.0, Critical Safety Function Status Trees on Unit 1.
f. **Document each CSF evaluation on FNP-1-CSF-0.0** by circling the final colored ball and procedure that applies, **and report the FRP that is required to be implemented**, if any.
g. Plant conditions are given in the attached Table 1.

INITIATING **CUE**: IF you have no questions, you may begin.

EVALUATION CHECKLIST

ELEMENTS:	STANDARDS:	RESULTS: (CIRCLE)
____ **START TIME**		
* 1. Evaluate CSF-0.1.	POWER RNG LESS THAN 5% - **YES** BOTH INT RNG SUR ZERO OR NEGATIVE – **NO** Determines that an Orange condition exists to go to FRP-S.1.	S / U
* 2. Evaluate CSF-0.2.	FIFTH HOTTEST CORE EXIT TC LESS THAN 1200°F – **YES** RCS SUBCOOLING FROM CORE EXIT TC'S GRTR THAN 16°F{45°F} – **YES** Determines that this CSF is SAT.	S / U

EVALUATION CHECKLIST

ELEMENTS:	STANDARDS:	RESULTS: (CIRCLE)
* 3. Evaluate CSF-0.3.	NAR RNG LVL IN AT LEAST ONE SG GRTR THAN 31%{48%} - **NO** TOTAL AFW FLOW TO ALL SG'S GRTR THAN 395 GPM – **YES** PRESS IN ALL SG'S LESS THAN 1129 PSIG – **YES** NAR RNG LVL IN ALL SG'S LESS THAN 82% - **YES** PRESS IN ALL SG'S LESS THAN 1075 PSIG – **YES** NAR RNG LVL IN ALL SG'S GRTR THAN 31% - **NO** Determines that a Yellow condition exists to go to FRP-H.5.	S / U
* 4. Evaluate CSF-0.4.	TEMP DECR IN ALL CL IN LAST 60 MIN LESS THAN 100°F – **NO** ALL RCS PRESS CL TEMP (IN LAST 60 MIN) POINTS TO RIGHT OF LIMIT A – **YES** ALL RCS CL TEMPS IN LAST 60 MIN GRTR THAN 250°F – **NO** Determines that an Orange condition exists to go to FRP-P.1.	

EVALUATION CHECKLIST

ELEMENTS:	STANDARDS:	RESULTS: (CIRCLE)
* 5. Evaluate CSF-0.5.	CTMT PRESS LESS THAN 54 PSIG – **YES** CTMT PRESS LESS THAN 27 PSIG – **YES** CTMT SUMP LVL LESS THAN 7.6 FT. – **YES** BOTH CTMT RAD LESS THAN 2 R/hr. - **YES** Determines that this CSF is SAT.	
* 6. Evaluate CSF-0.6.	PRZR LVL LESS THAN 92% - **YES** PRZR LVL GRTR THAN 15% - **NO** Determines that a Yellow condition exists to go to FRP-I.2.	
* 7. Determines FRP entry requirements.	Determines that FRP-S.1 is required to be implemented. (**CUE:** After evaluation of CSF-0.0, "What FRP, if any, is required to be implemented?")	

_____ **STOP TIME**

Terminate when all elements of the task have been completed.

CRITICAL ELEMENTS: Critical Elements are denoted with an asterisk (*) before the element number.

GENERAL REFERENCES:

1. FNP-1-CSF-0.0, VER 17.0

2. KA: G2.1.7 RO (4.4) SRO (4.7)

GENERAL TOOLS AND EQUIPMENT:

1. FNP-1-CSF-0.0, VER 17.0

Critical ELEMENT justification:

STEP	Evaluation
1	**Critical:** Task completion: required to properly evaluate CSF-0.1 to determine that an Orange path condition exists. This is the highest priority FRP for the conditions given. If this is not evaluated properly, a transition to a lower level procedure could occur, and the highest priority FRP would not be implemented.
2-6	**Critical:** Task completion: Actions are required to evaluate each CSF properly to complete task successfully. This CSF evaluation should determine the CSF color and procedure, if any, that apply.
7	**Critical:** Task completion: required to determine that FRP-S.1 is to be implemented.

COMMENTS:

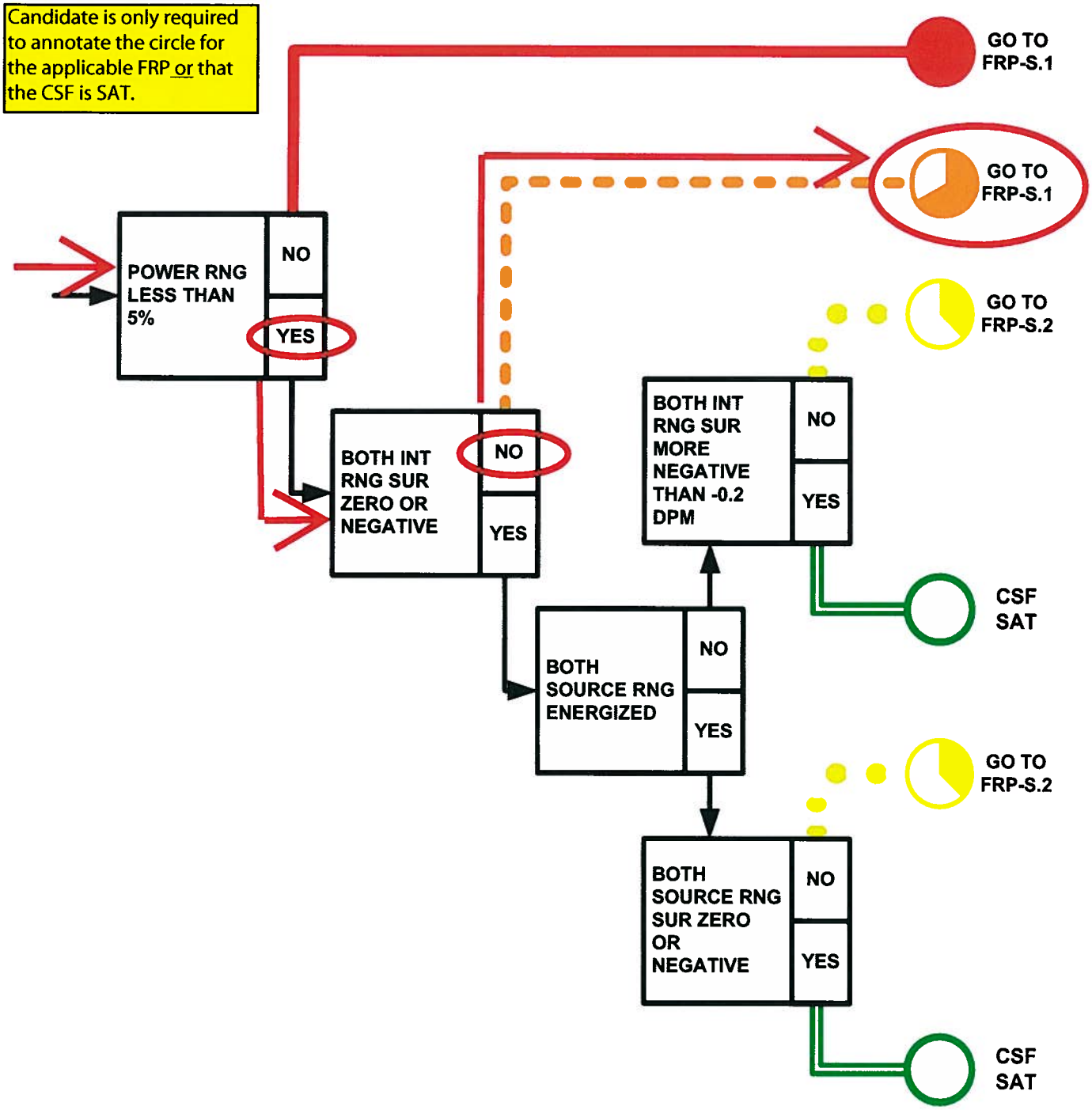
Candidate is only required to annotate the circle for the applicable FRP or that the CSF is SAT.
GO TO FRP-S.1
GO TO FRP-S.1
GO TO FRP-S.2
POWER RNG LESS THAN 5%
NO
YES
BOTH INT RNG SUR ZERO OR NEGATIVE
NO
YES
BOTH INT RNG SUR MORE NEGATIVE THAN -0.2 DPM
NO
YES
CSF SAT
BOTH SOURCE RNG ENERGIZED
NO
YES
GO TO FRP-S.2
BOTH SOURCE RNG SUR ZERO OR NEGATIVE
NO
YES
CSF SAT

Candidate is only required to annotate the circle for the applicable FRP or that the CSF is SAT.

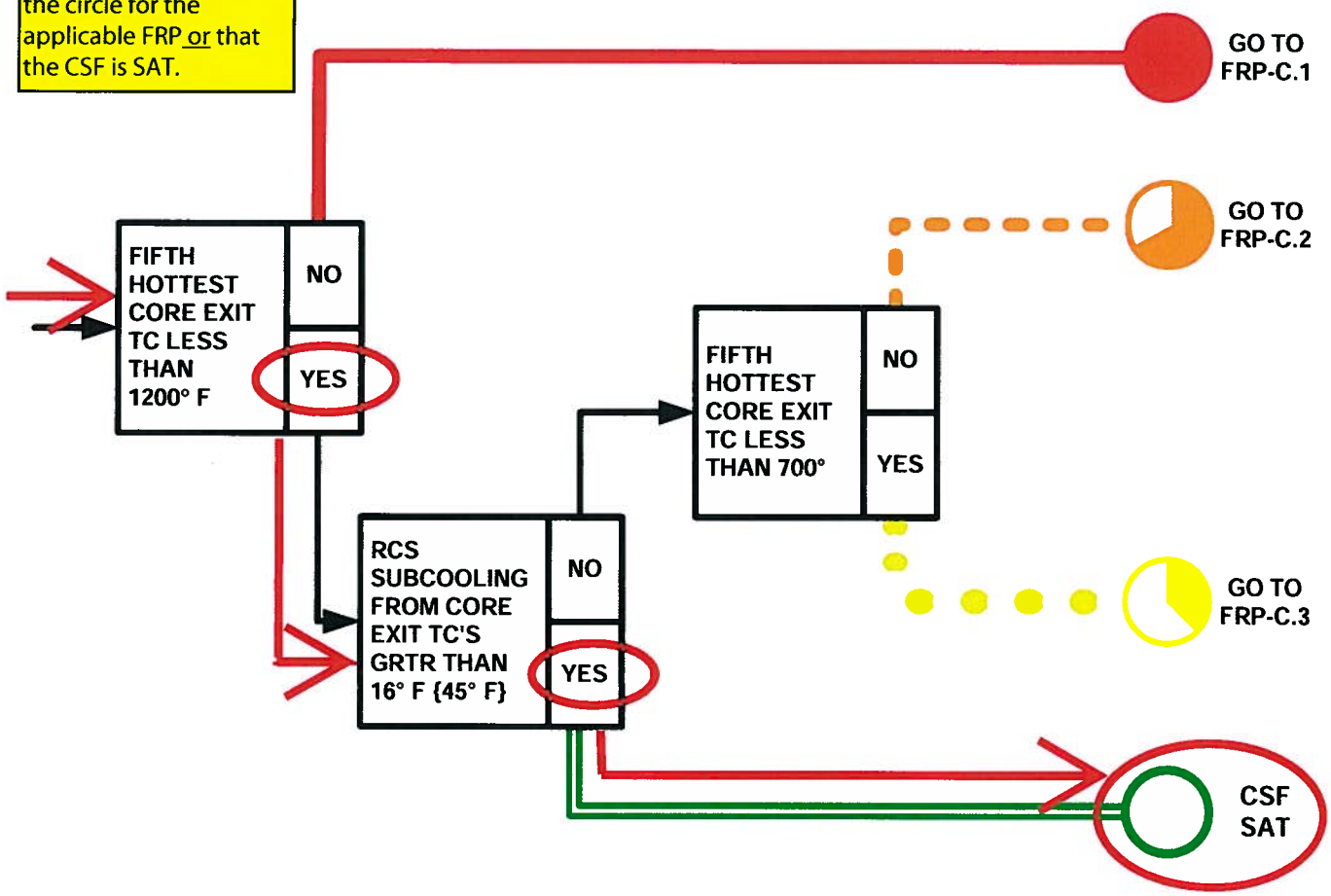

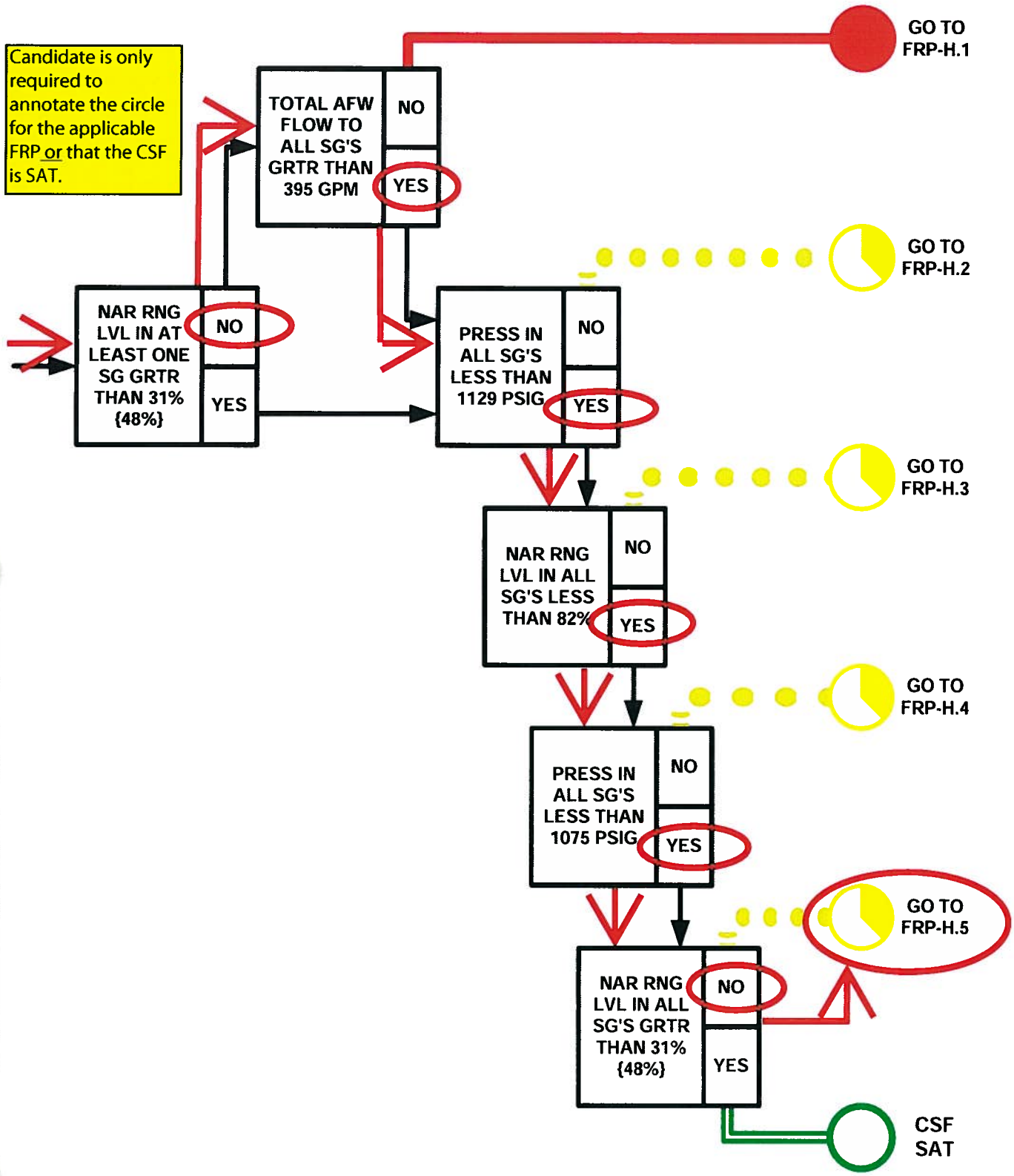
Candidate is only required to annotate the circle for the applicable FRP or that the CSF is SAT.
TOTAL AFW FLOW TO ALL SG'S GRTR THAN 395 GPM
NO
YES
GO TO FRP-H.1
NAR RNG LVL IN AT LEAST ONE SG GRTR THAN 31% {48%}
NO
YES
PRESS IN ALL SG'S LESS THAN 1129 PSIG
NO
YES
GO TO FRP-H.2
NAR RNG LVL IN ALL SG'S LESS THAN 82%
NO
YES
GO TO FRP-H.3
PRESS IN ALL SG'S LESS THAN 1075 PSIG
NO
YES
GO TO FRP-H.4
NAR RNG LVL IN ALL SG'S GRTR THAN 31% {48%}
NO
YES
GO TO FRP-H.5
CSF SAT

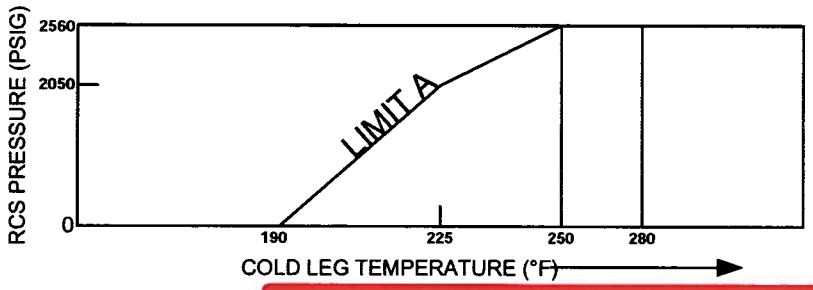

Candidate is only required to annotate the circle for the applicable FRP or that the CSF is SAT.

TEMP DECR IN ALL CL IN LAST 60 MIN LESS THAN 100° F — NO / YES

ALL RCS PRESS -- CL TEMP (IN LAST 60 MIN) POINTS TO RIGHT OF LIMIT A — NO / YES

ALL RCS CL TEMPS IN LAST 60 MIN GRTR THAN 250° F — NO / YES

ALL RCS CL TEMPS IN LAST 60 MIN GRTR THAN 280° F — NO / YES

ALL RCS TEMPS GRTR THAN 325° F — NO / YES

RCS PRESS LESS THAN 450 PSIG — NO / YES

ALL RCS CL TEMPS GRTR THAN 250° F — NO / YES

GO TO FRP-P.1

GO TO FRP-P.1

GO TO FRP-P.2

CSF SAT

GO TO FRP-P.1

GO TO FRP-P.2

CSF SAT

CSF SAT

INTEGRITY

RCS PRESSURE - TEMPERATURE CRITERIA

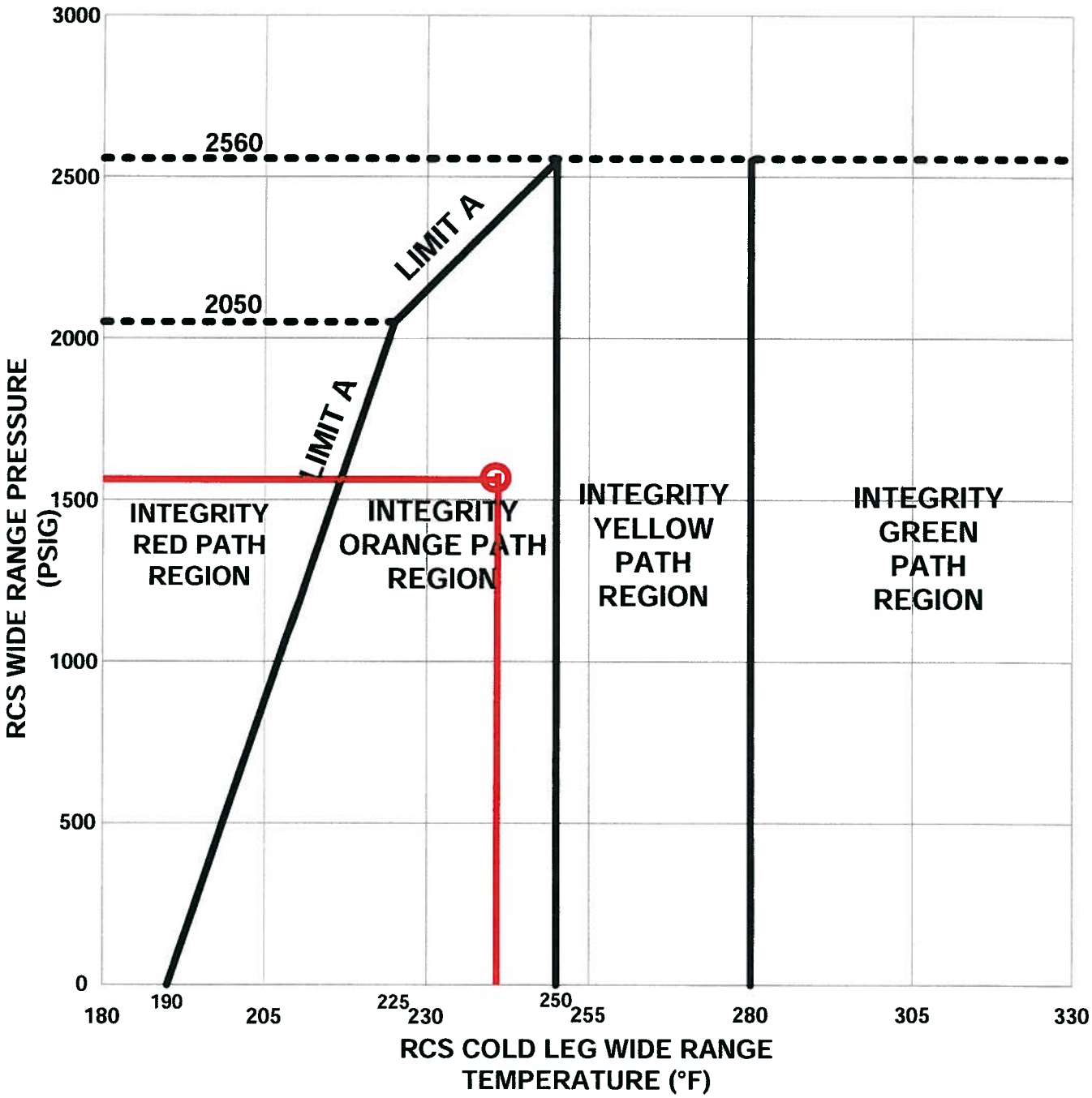

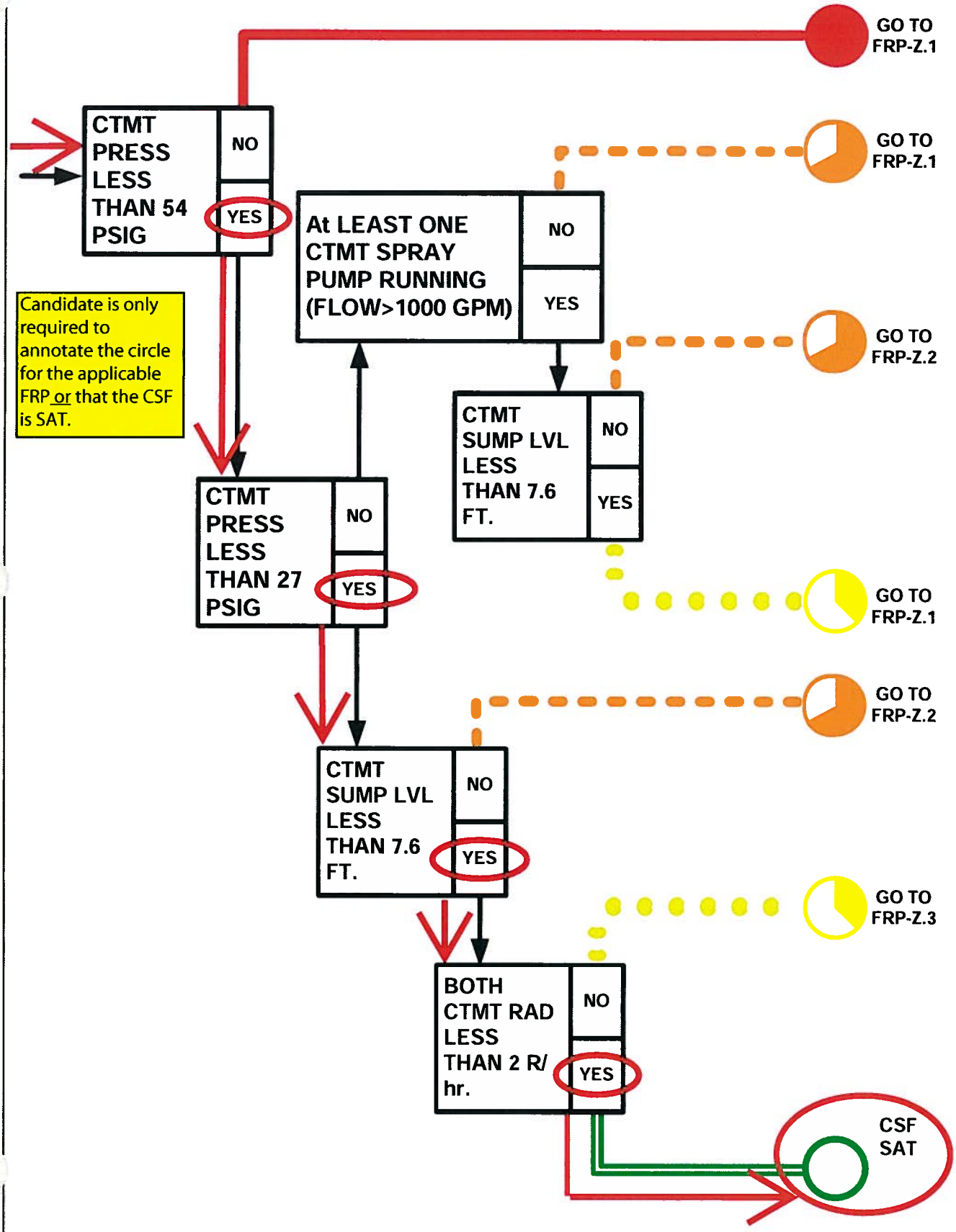
GO TO FRP-Z.1
CTMT PRESS LESS THAN 54 PSIG
NO
YES
GO TO FRP-Z.1
At LEAST ONE CTMT SPRAY PUMP RUNNING (FLOW>1000 GPM)
NO
YES
Candidate is only required to annotate the circle for the applicable FRP or that the CSF is SAT.
GO TO FRP-Z.2
CTMT SUMP LVL LESS THAN 7.6 FT.
NO
YES
CTMT PRESS LESS THAN 27 PSIG
NO
YES
GO TO FRP-Z.1
GO TO FRP-Z.2
CTMT SUMP LVL LESS THAN 7.6 FT.
NO
YES
GO TO FRP-Z.3
BOTH CTMT RAD LESS THAN 2 R/hr.
NO
YES
CSF SAT

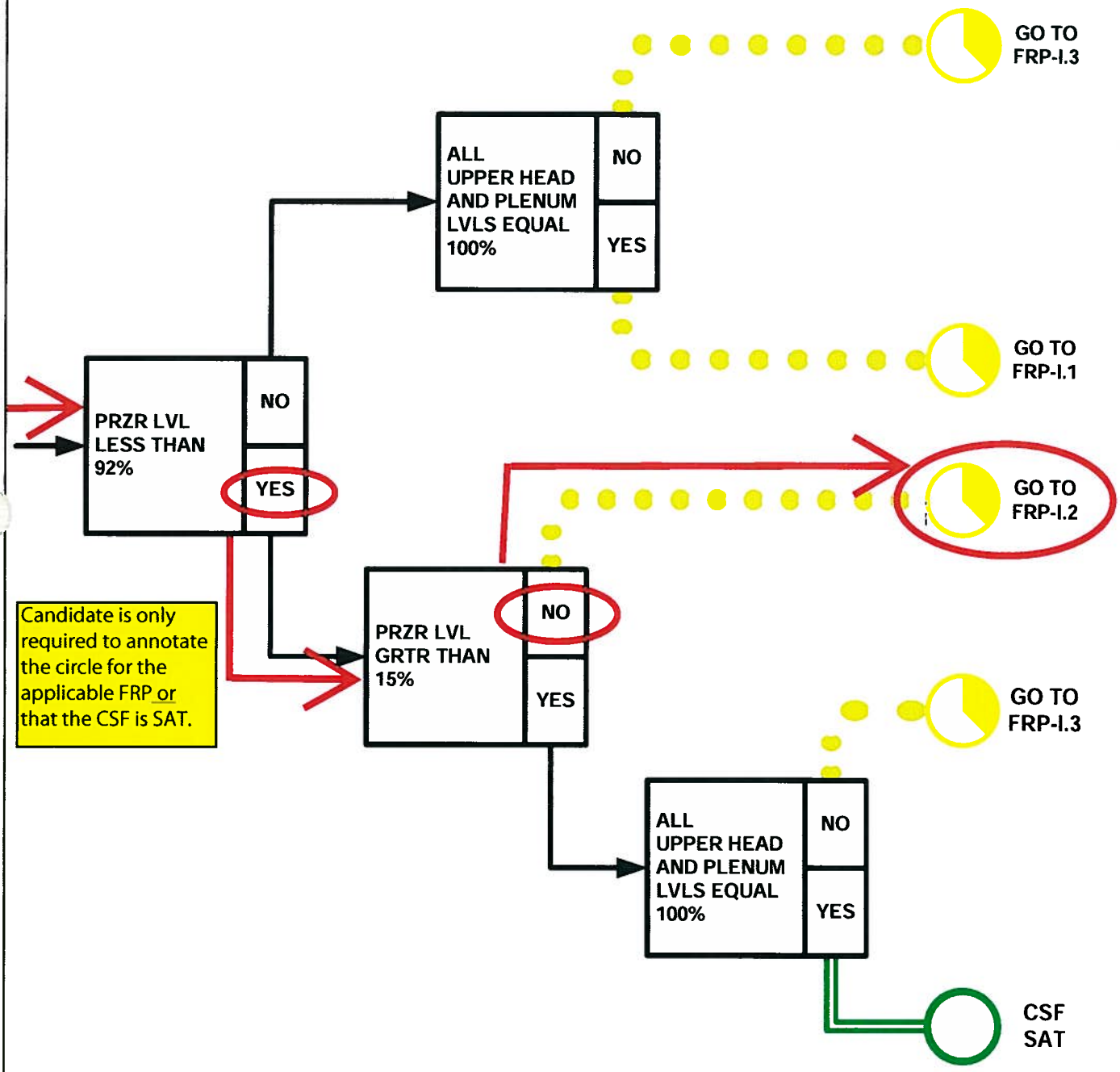
PRZR LVL LESS THAN 92%
NO
YES
ALL UPPER HEAD AND PLENUM LVLS EQUAL 100%
NO
YES
GO TO FRP-I.3
GO TO FRP-I.1
PRZR LVL GRTR THAN 15%
NO
YES
GO TO FRP-I.2
ALL UPPER HEAD AND PLENUM LVLS EQUAL 100%
NO
YES
GO TO FRP-I.3
CSF SAT
Candidate is only required to annotate the circle for the applicable FRP or that the CSF is SAT.

CONDITIONS

When I tell you to begin, you are to MONITOR AND EVALUATE CRITICAL SAFETY FUNCTION STATUS TREES. The conditions under which this task is to be performed are:

a. Unit 1 tripped from 100% power.
b. A Safety Injection occurred 30 minutes ago.
c. The crew is performing actions in EEP-1, Loss of Reactor or Secondary Coolant.
d. The SPDS computer is **NOT** available for monitoring Critical Safety Functions.
e. You have been directed to manually monitor the Critical Safety Functions using CSF-0.0, Critical Safety Function Status Trees on Unit 1.
f. **Document each CSF evaluation on FNP-1-CSF-0.0** by circling the final colored ball and procedure that applies, **and report the FRP that is required to be implemented**, if any.
g. Plant conditions are given in the attached Table 1.

Table 1

Parameter	INSTRUMENT			
	Channel I or Train A	Channel II or Train B	Channel III	Channel IV
Power Range NI	0%	0%	0%	0%
Intermediate Range SUR	+0.2 DPM	+0.25 DPM		
Intermediate Range NI	3.0×10^{-8} AMPS	3.2×10^{-8} AMPS		
Source Range SUR	0 DPM	0 DPM		
Source Range NI	0 CPS	0 CPS		
RCS Pressure	1575 psig	1550 psig		
MCB Core Exit T/C Monitor in **TMAX** mode	329°F	325°F		
PRZR level	2%	4%	5%	
CTMT Pressure	0 psig	0 psig	0 psig	0 psig
RCS Subcooling	250°F	250°F		
CTMT Emergency Sump Levels	0 inches	0 inches		
CTMT Radiation	24 mR / Hr	31 mR / Hr		

Parameter	RCS Loop 1	RCS Loop 2	RCS Loop 3
SG NR Level (all channels)	20%	0%	20%
AFW flow	325 GPM	0 GPM	340 GPM
SG Pressure (all channels)	800 psig	25 psig	820 psig
RCS WR Cold Leg Temperature	420°F	240°F	425°F
RCP status	Off	Off	Off

FARLEY NUCLEAR PLANT

CRITICAL SAFETY FUNCTION PROCEDURE

FNP-1-CSF-0

CRITICAL SAFETY FUNCTION STATUS TREES

PROCEDURE USAGE REQUIREMENTS-per FNP-0-AP-6	SECTIONS
Continuous Use	**ALL**
Reference Use	
Information Use	

SAFETY RELATED

Approved:

Jim L. Hunter (for)
Operations Manager

Date Issued: 09/14/07

Table of Contents

Procedure Contains	Number of Pages
Body	2
FNP-1-CSF-0.1	1
FNP-1-CSF-0.2	1
FNP-1-CSF-0.3	1
FNP-1-CSF-0.4	2
FNP-1-CSF-0.5	1
FNP-1-CSF-0.6	1

A. **Purpose**

This procedure provides actions required to evaluate the status of the Critical Safety Functions.

B. **Symptoms or Entry Conditions**

I. This procedure is entered when monitoring of the Critical Safety Functions is required from FNP-1-EEP-0, REACTOR TRIP OR SAFETY INJECTION, step 23.

II. This procedure is entered when the operator transfers from the guidance of FNP-1-EEP-0, REACTOR TRIP OR SAFETY INJECTION to any other recovery guideline.

Step	Action/Expected Response	Response NOT Obtained
___ 1	**Check at least one control room IPC SPDS console - Operable.**	
	1.1 Verify no HOST LINK DOWN message on the IPC title bar.	1.1 Proceed to step 3.2.
___ 2	**Check SPDS TOP LEVEL page.**	
	2.1 Click SPDS button on top toolbar.	

NOTE: Suspect critical safety functions are indicated by the color magenta.

	2.2 Verify no Critical Safety Functions - SUSPECT. [] Subcriticality [] Core Cooling [] Heat Sink [] Integrity [] Containment [] Inventory	2.2 Monitor Critical Safety Function which is SUSPECT using FNP-1-CSF-0.1 through FNP-1-CSF-0.6 as appropriate.
___ 3	**Monitor Critical Safety Functions.**	
	3.1 Monitor Critical Safety Functions with SPDS Application on IPC. <u>OR</u> 3.2 Monitor Critical Safety Functions using FNP-1-CSF-0.1 through FNP-1-CSF-0.6	

-END-

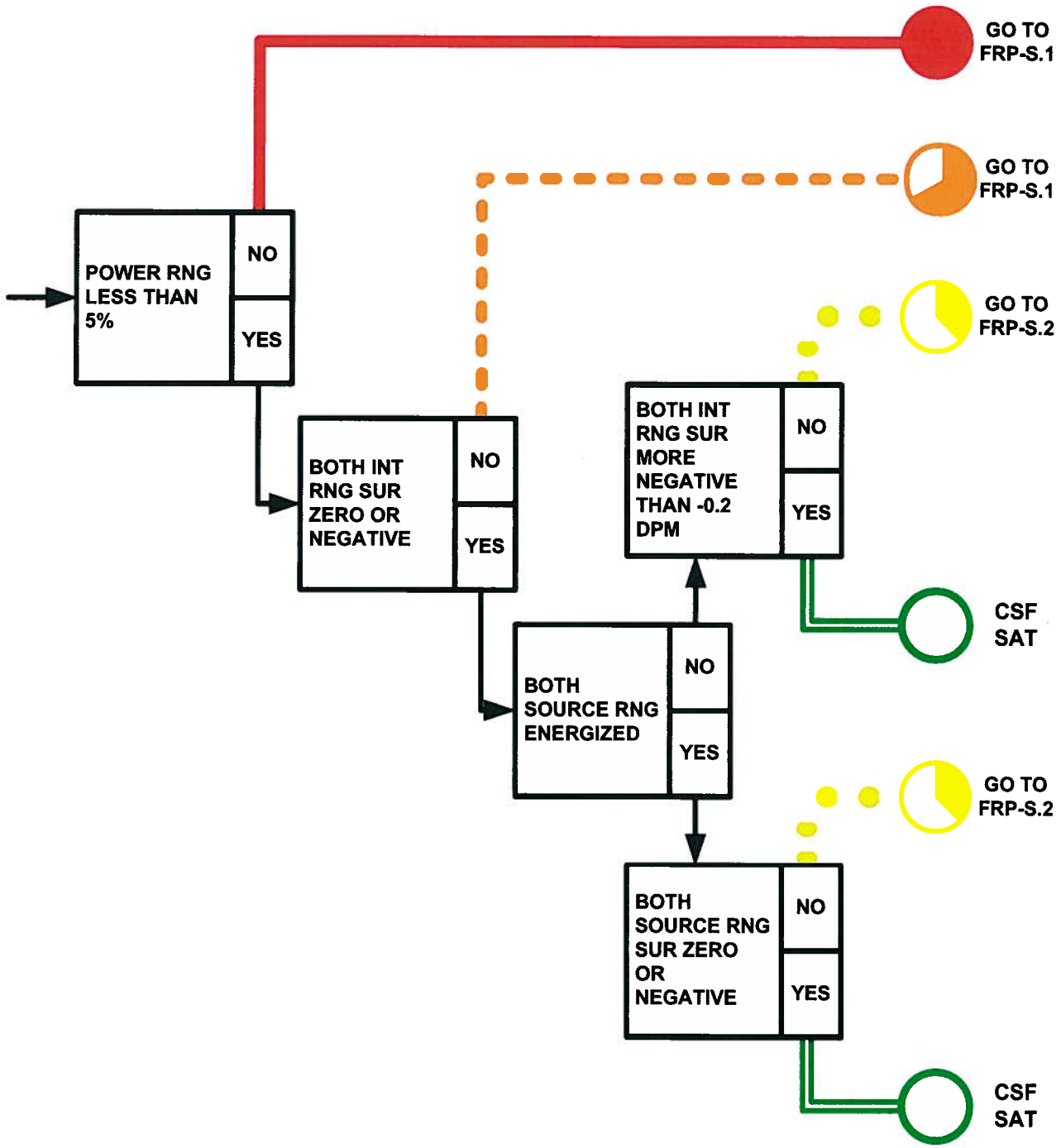
POWER RNG LESS THAN 5%
NO
YES
GO TO FRP-S.1
BOTH INT RNG SUR ZERO OR NEGATIVE
NO
YES
GO TO FRP-S.1
BOTH SOURCE RNG ENERGIZED
NO
YES
BOTH INT RNG SUR MORE NEGATIVE THAN -0.2 DPM
NO
YES
GO TO FRP-S.2
CSF SAT
BOTH SOURCE RNG SUR ZERO OR NEGATIVE
NO
YES
GO TO FRP-S.2
CSF SAT

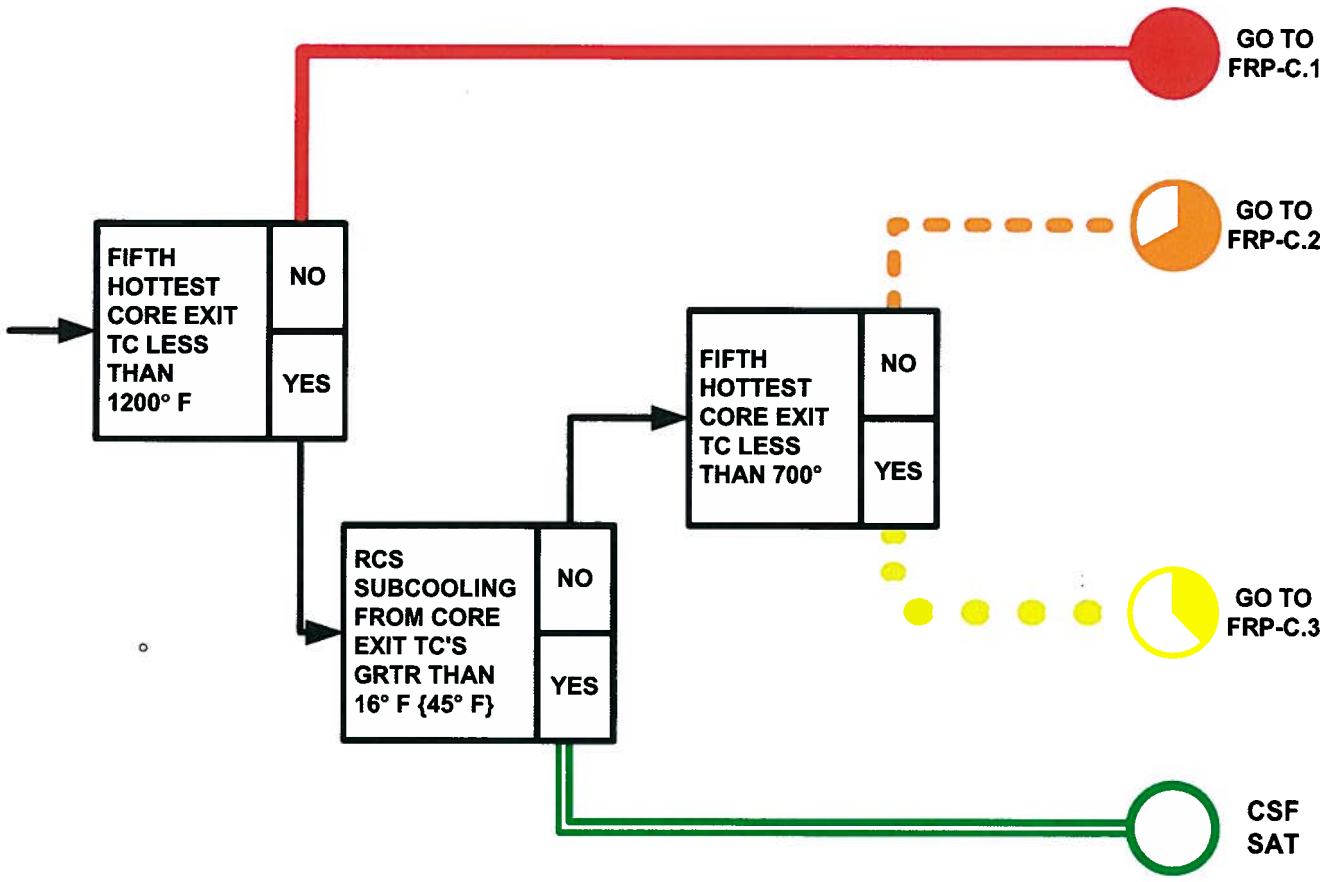
FIFTH HOTTEST CORE EXIT TC LESS THAN 1200° F
NO
YES
GO TO FRP-C.1
RCS SUBCOOLING FROM CORE EXIT TC'S GRTR THAN 16° F {45° F}
NO
YES
FIFTH HOTTEST CORE EXIT TC LESS THAN 700°
NO
YES
GO TO FRP-C.2
GO TO FRP-C.3
CSF SAT

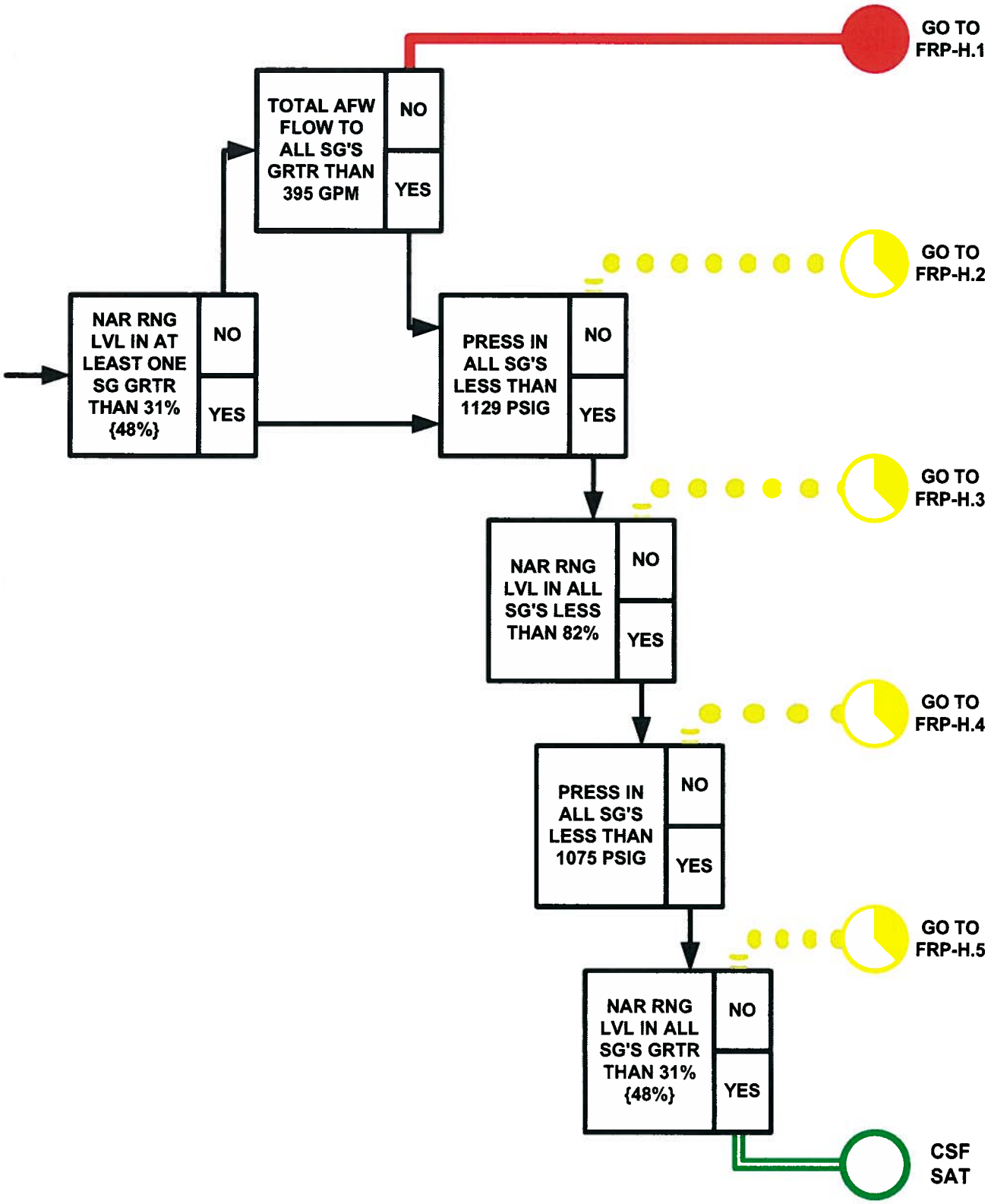
GO TO FRP-H.1
TOTAL AFW FLOW TO ALL SG'S GRTR THAN 395 GPM
NO
YES
GO TO FRP-H.2
NAR RNG LVL IN AT LEAST ONE SG GRTR THAN 31% {48%}
NO
YES
PRESS IN ALL SG'S LESS THAN 1129 PSIG
NO
YES
GO TO FRP-H.3
NAR RNG LVL IN ALL SG'S LESS THAN 82%
NO
YES
GO TO FRP-H.4
PRESS IN ALL SG'S LESS THAN 1075 PSIG
NO
YES
GO TO FRP-H.5
NAR RNG LVL IN ALL SG'S GRTR THAN 31% {48%}
NO
YES
CSF SAT

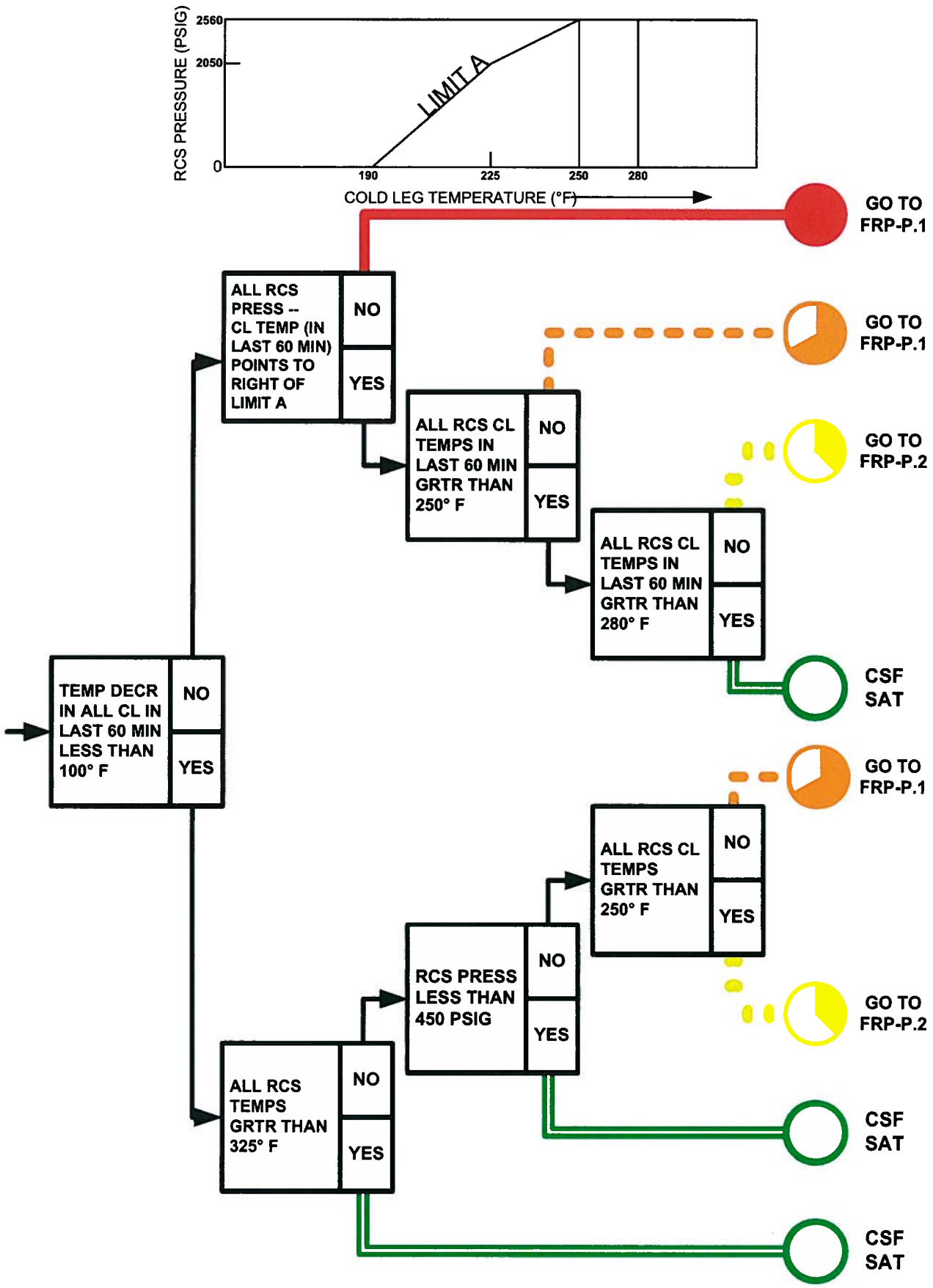
RCS PRESSURE (PSIG)
2560
2050
0
LIMIT A
190
225
250
280
COLD LEG TEMPERATURE (°F)
GO TO FRP-P.1
ALL RCS PRESS -- CL TEMP (IN LAST 60 MIN) POINTS TO RIGHT OF LIMIT A
NO
YES
GO TO FRP-P.1
ALL RCS CL TEMPS IN LAST 60 MIN GRTR THAN 250° F
NO
YES
GO TO FRP-P.2
ALL RCS CL TEMPS IN LAST 60 MIN GRTR THAN 280° F
NO
YES
CSF SAT
TEMP DECR IN ALL CL IN LAST 60 MIN LESS THAN 100° F
NO
YES
GO TO FRP-P.1
ALL RCS CL TEMPS GRTR THAN 250° F
NO
YES
RCS PRESS LESS THAN 450 PSIG
NO
YES
GO TO FRP-P.2
CSF SAT
ALL RCS TEMPS GRTR THAN 325° F
NO
YES
CSF SAT

INTEGRITY

RCS PRESSURE - TEMPERATURE CRITERIA

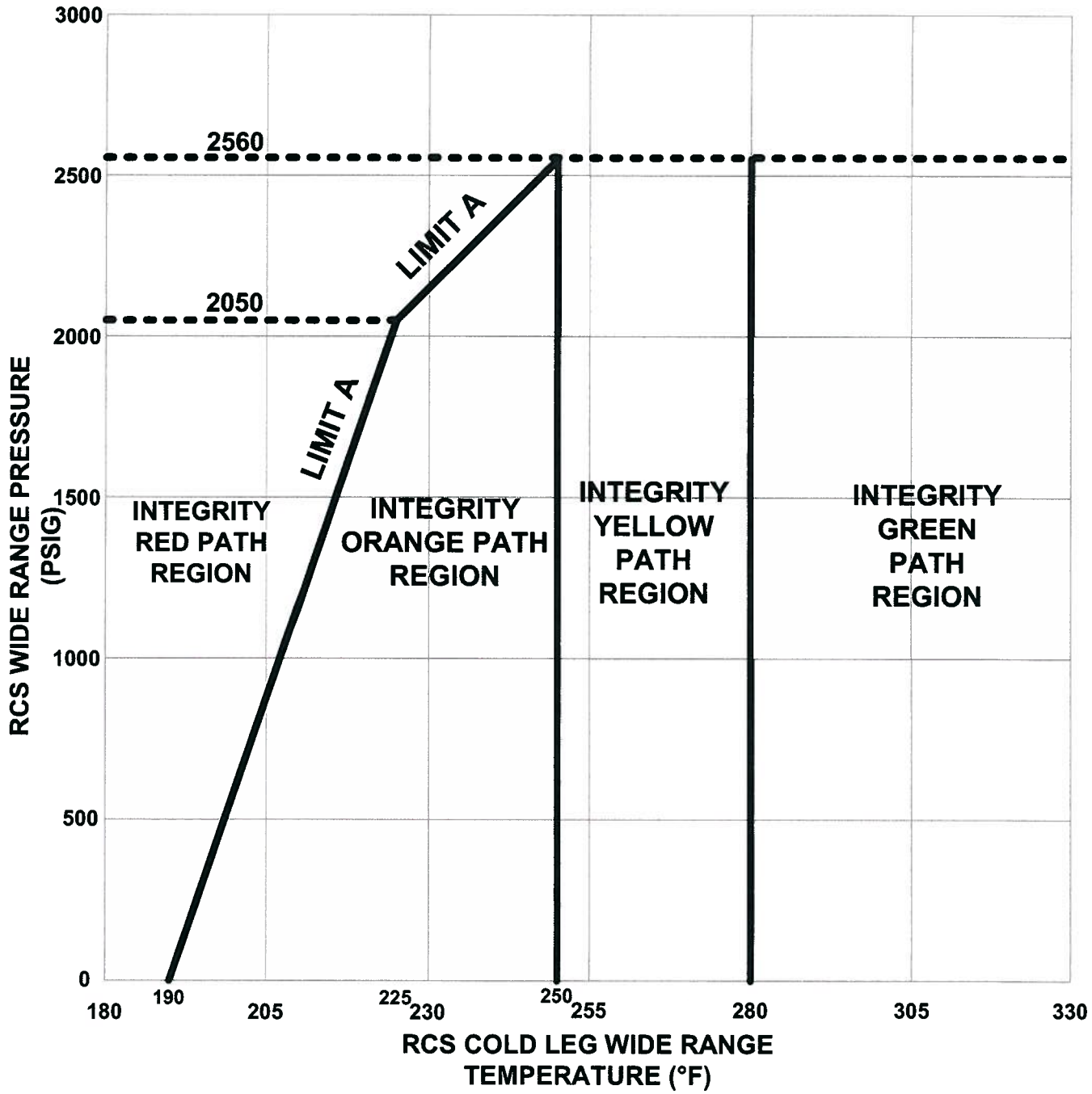

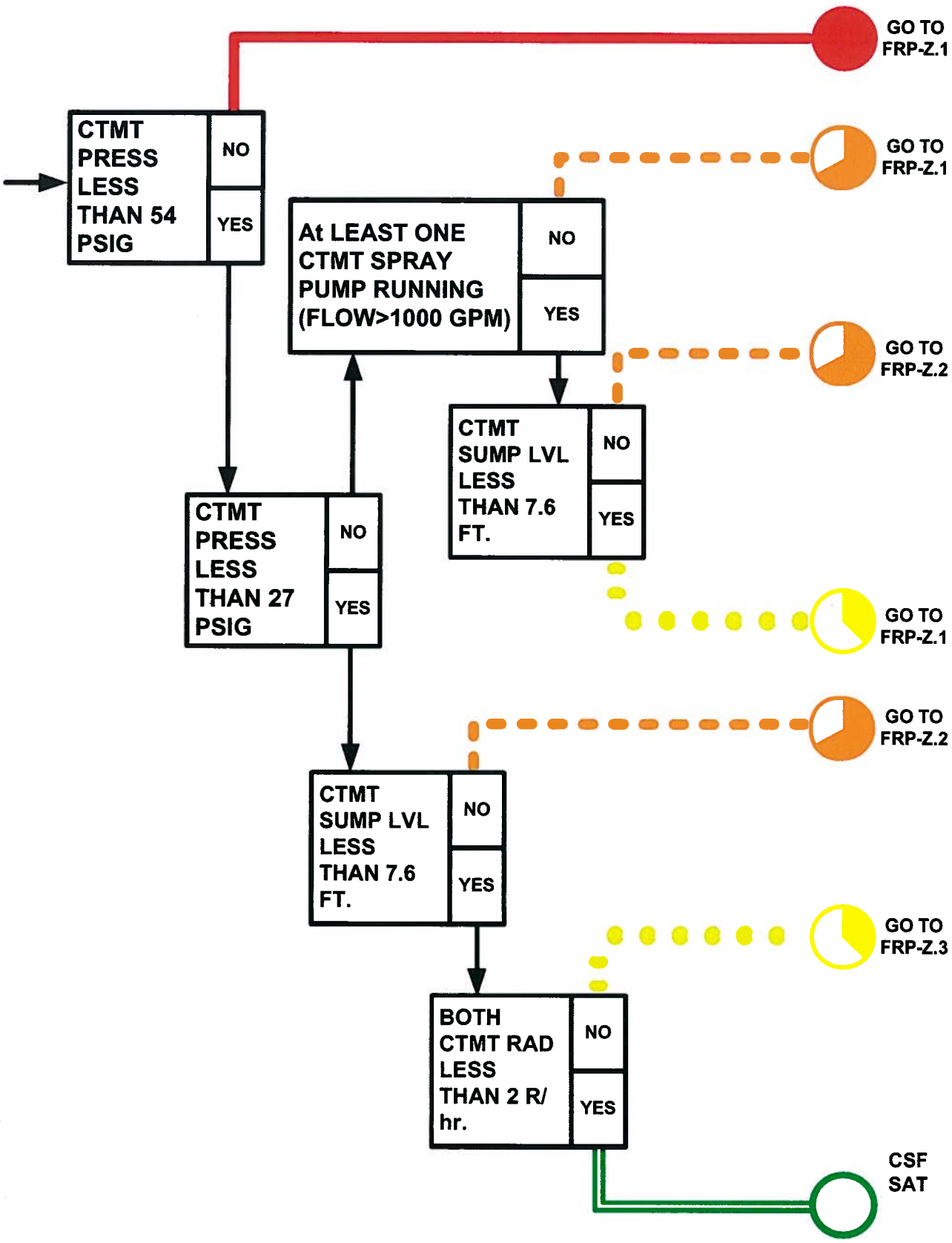
CTMT PRESS LESS THAN 54 PSIG
NO
YES
GO TO FRP-Z.1
At LEAST ONE CTMT SPRAY PUMP RUNNING (FLOW>1000 GPM)
NO
YES
GO TO FRP-Z.1
CTMT SUMP LVL LESS THAN 7.6 FT.
NO
YES
GO TO FRP-Z.2
CTMT PRESS LESS THAN 27 PSIG
NO
YES
GO TO FRP-Z.1
CTMT SUMP LVL LESS THAN 7.6 FT.
NO
YES
GO TO FRP-Z.2
BOTH CTMT RAD LESS THAN 2 R/hr.
NO
YES
GO TO FRP-Z.3
CSF SAT

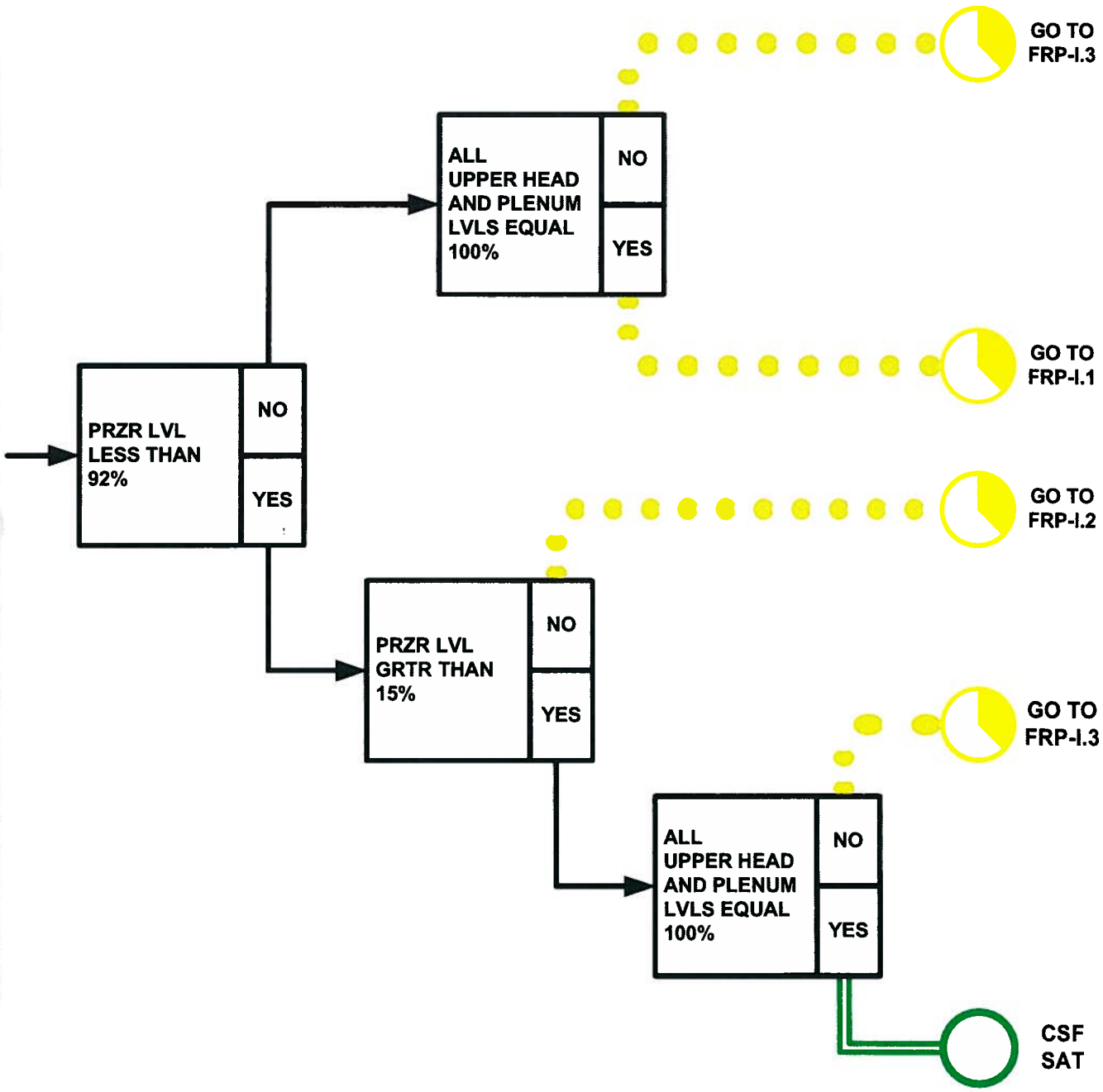
PRZR LVL LESS THAN 92%
NO
YES
ALL UPPER HEAD AND PLENUM LVLS EQUAL 100%
NO
YES
GO TO FRP-I.3
GO TO FRP-I.1
PRZR LVL GRTR THAN 15%
NO
YES
GO TO FRP-I.2
ALL UPPER HEAD AND PLENUM LVLS EQUAL 100%
NO
YES
GO TO FRP-I.3
CSF SAT

A1.2.S SRO only Conduct of Operations ADMIN G2.1.4

TITLE: Determine Active License Status.
EVALUATION LOCATION: ☐ SIMULATOR ☐ CONTROL ROOM ☒ CLASSROOM
PROJECTED TIME: 30 MIN SIMULATOR IC NUMBER: N/A
☐ ALTERNATE PATH ☐ TIME CRITICAL ☐ PRA

JPM DIRECTIONS:

1. Initiation of task may be in group setting, evaluation performed individually upon completion.
2. Requiring the examinee to acquire the required references may or may not be included as part of the JPM.

TASK STANDARD: Upon successful completion of this JPM, the examinee will:

- Correctly assess and determine the Active or Inactive License status of Plant Operators.

Examinee:		
Overall JPM Performance:	**Satisfactory** ☐	**Unsatisfactory** ☐
Evaluator Comments (attach additional sheets if necessary)		

EXAMINER: _____

Developer	Billy Thornton	Date: 2/7/2011
NRC Approval	SEE NUREG 1021 FORM ES-301-3	

CONDITIONS

When I tell you to begin, you are to DETERMINE THE ACTIVE OR INACTIVE STATUS OF LICENSED OPERATORS. The conditions under which this task is to be performed are:

a. An RO is required to fill the OATC position on January 31, 2011.
b. Three off shift RO's are available.
c. All three are current in LOCT (Licensed Operator Continuing Training) and have had a medical exam as required to maintain an active license.
d. None of the three have worked any shifts since December 31, 2010.
e. The three operators' work history is as follows:

- Operator A - License was active on October 1, 2010.
  10/02/10 worked 1900-0700 as Unit 2 OATC
  10/04/10 worked 1900-0700 as Unit 1 UO
  10/05/10 worked 1900-0700 as Unit 1 OATC
  11/14/10 worked 0700-1900 as Unit 2 UO
  11/17/10 worked 0700-1900 as Unit 2 UO

- Operator B - License was active on October 1, 2010.
  10/28/10 worked 0700-1900 as Unit 1 UO
  11/03/10 worked 0700-1900 as Unit 1 UO
  11/05/10 worked 0700-1900 as an on shift Extra
  11/14/10 worked 1900-0700 as Unit 1 OATC
  12/05/10 worked 0700-1900 as Unit 1 UO

- Operator C - License was **inactive** on October 1, 2010.
  From 10/12/2010 thru 10/16/2010 worked 40 hours under the direction of the Unit 1 OATC and completed all requirements for license reactivation.
  11/15/10 worked 0700-1900 as Unit 2 OATC
  12/04/10 worked 0700-1900 as Unit 2 OATC
  12/16/10 worked 0700-1900 as Unit 1 UO
  12/17/10 worked 0700-1900 as Unit 1 OATC

f. You have been directed to determine the Active or Inactive status of the three off shift RO's on January 31, 2011, in accordance with NMP-TR-406, Active License Maintenance.

INITIATING CUE: IF you have no questions, you may begin.

EVALUATION CHECKLIST

ELEMENTS:	STANDARDS:	RESULTS: (CIRCLE)
____ START TIME		

EVALUATION CHECKLIST

ELEMENTS:	STANDARDS:	RESULTS: (CIRCLE)
* 1. Evaluate the status of Operator A.	Operator A is determined to have **ACTIVE** license status based on working at least 5 - 12 hour shifts during the calendar quarter October 1 – December 31, in a position requiring an active license and required by Tech Specs. This operator worked 6 – 12 hour shifts during that quarter. Step 6.5.2.1 of NMP -TR-406.	S / U
* 2. Evaluate the status of Operator B.	Operator B is determined to have **INACTIVE** license status. This operator worked 5 - 12 hour shifts during the calendar quarter October 1 – December 31, but one of those shifts was **NOT** in a position required by Tech Specs (11/05/2010 working as an on shift Extra). Step 6.5.2.1 of NMP -TR-406.	S / U
* 3. Evaluate the status of Operator C.	Operator C is determined to have **ACTIVE** license status. This operator reactivated his license during the calendar quarter of October 1-December 31, 2010. When a license is reactivated, it is considered active for that quarter without working any additional shifts. When a licensed operator has met the requirements for an active license in a quarter he is available and considered active for the next quarter. Step 6.6.1 and 6.6.8 of NMP -TR-406.	S / U

_____ **STOP TIME**

Terminate when all elements of the task have been completed.

CRITICAL ELEMENTS: Critical Elements are denoted with an asterisk (*) before the element number.

GENERAL REFERENCES:

1. NMP-TR-406, VER 1.0
2. NMP-TR-406-F01, VER 1.0
3. NMP-TR-406-F02, VER 1.0
4. NMP-TR-406-F03, VER 1.0
5. KA: G2.1.4 RO 3.3 SRO 3.8

GENERAL TOOLS AND EQUIPMENT:

1. NMP-TR-406, VER 1.0
2. NMP-TR-406-F01, VER 1.0
3. NMP-TR-406-F02, VER 1.0
4. NMP-TR-406-F03, VER 1.0

Critical ELEMENT justification:

STEP	Evaluation
1	**Critical:** Task completion: required to properly evaluate the active or inactive status of Operator A.
2	**Critical:** Task completion: required to properly evaluate the active or inactive status of Operator B.
3	**Critical:** Task completion: required to properly evaluate the active or inactive status of Operator C.

COMMENTS:

The following procedures will be provided to the students:

1. NMP-TR-406, VER 1.0
2. NMP-TR-406-F01, VER 1.0
3. NMP-TR-406-F02, VER 1.0
4. NMP-TR-406-F03, VER 1.0

CONDITIONS

When I tell you to begin, you are to DETERMINE THE ACTIVE OR INACTIVE STATUS OF LICENSED OPERATORS. The conditions under which this task is to be performed are:

a. An RO is required to fill the OATC position on January 31, 2011.
b. Three off shift RO's are available.
c. All three are current in LOCT (Licensed Operator Continuing Training) and have had a medical exam as required to maintain an active license.
d. None of the three have worked any shifts since December 31, 2010.
e. The three operators' work history is as follows:

- Operator A - License was active on October 1, 2010.
  10/02/10 worked 1900-0700 as Unit 2 OATC
  10/04/10 worked 1900-0700 as Unit 1 UO
  10/05/10 worked 1900-0700 as Unit 1 OATC
  11/14/10 worked 0700-1900 as Unit 2 UO
  11/17/10 worked 0700-1900 as Unit 2 UO

- Operator B - License was active on October 1, 2010.
  10/28/10 worked 0700-1900 as Unit 1 UO
  11/03/10 worked 0700-1900 as Unit 1 UO
  11/05/10 worked 0700-1900 as an on shift Extra
  11/14/10 worked 1900-0700 as Unit 1 OATC
  12/05/10 worked 0700-1900 as Unit 1 UO

- Operator C - License was **inactive** on October 1, 2010.
  From 10/12/2010 thru 10/16/2010 worked 40 hours under the direction of the Unit 1 OATC and completed all requirements for license reactivation.
  11/15/10 worked 0700-1900 as Unit 2 OATC
  12/04/10 worked 0700-1900 as Unit 2 OATC
  12/16/10 worked 0700-1900 as Unit 1 UO
  12/17/10 worked 0700-1900 as Unit 1 OATC

f. You have been directed to determine the Active or Inactive status of the three off shift RO's on January 31, 2011, in accordance with NMP-TR-406, Active License Maintenance.

Operator A status - _____. (Active / Inactive)

Operator B status - _____. (Active / Inactive)

Operator C status - _____. (Active / Inactive)

Procedure Owner: Robert J. Brown / Fleet Training Manager / Corporate

Approved By: Original signed by Brad Deen for R. J. Brown / 08/27/2010
(Procedure Owner's Signature) (Date)

Effective Dates:

10/01/2010	10/01/2010	10/01/2010	10/01/2010
Corporate	FNP	HNP	VEGP

PRB Not Required

This Standardization process control NMP is under the oversight of the Training Peer Team.

Writer(s): Brad Deen
Derwood Tootle
George Gunn
David Hall
Dale Moran
Randy Odom
Brian Reed

PROCEDURE USAGE REQUIREMENTS		SECTIONS
Continuous Use:	Procedure must be open and readily available at the work location. Follow procedure step by step unless otherwise directed by the procedure.	
Reference Use:	Procedure or applicable section(s) available at the work location for ready reference by person performing steps.	
Information Use:	Available on site for reference as needed.	**ALL**

Procedure Version Description

Version Number	Version Description
1.0	Initial issue of procedure

Table of Contents

Page

1.0 Purpose 4
2.0 Applicability 4
3.0 References 4
4.0 Definitions 5
5.0 Responsibilities 6
6.0 Procedure 7
7.0 Records 15
8.0 Commitments 15
Attachment 1 Nuclear Regulatory Commission Medical Restriction Change Letter 16
Attachment 2 Routine Nuclear Regulatory Commission License Medical Examination Flowpath 17
Attachment 3 Medical Condition Flowpath 18
Attachment 4 Medical Conditions List 19
Attachment 5 License Renewal Letter 20
Attachment 6 License Termination Letter 21

1.0 Purpose

This procedure establishes the processes for maintaining Nuclear Regulatory Commission (NRC) licenses including the following:

- Active Licensed Duties
- Biennial Licensed Operator Medical Examination
- Evaluation of Changes in the Physical Conditions of Licensed Operators
- License Renewal
- Maintenance of an Active License
- License Reactivation
- Reactivation of a Senior Reactor Operator for Supervising Core Alterations
- Maintenance of a Senior Reactor Operator Licenses Reactivated to Supervise Core Alterations
- Respirator Glasses
- No Solo Operation

2.0 Applicability

This procedure is applicable to all individuals holding or pursuing a Reactor Operator (RO) or Senior Reactor Operator (SRO) license.

3.0 References

3.1 ANSI 3.4, 1983, "Medical Certification and Monitoring of Personnel Requiring Operator Licenses for Nuclear Power Plants"

3.2 10 CFR 50, "Domestic Licensing of Production and Utilization Facilities"

3.3 10 CFR 55, "Operator's Licenses"

3.4 10 CFR 55.4, "Operator's Licenses – Definitions"

3.5 10 CFR 55.25, "Incapacitation because of Disability or Illness"

3.6 Meeting Summary – NRC Region II Annual Training Managers' Conference, Tom Peebles to George Hairston, June 2, 1995

3.7 NEI 99-02, "Regulatory Assessment Performance Indicator Guideline"

3.8 NMP-TR-406-F01, "Active License Maintenance"

3.9 NMP-TR-406-F02, "Senior Reactor Operator Reactivation for Core Alterations"

3.10 NMP-TR-406-F03, "License Reactivation Documentation"

3.11 NRC Information Notice IN 91-08, "Medical Examinations for Licensed Operators"

3.12 NRC Information Notice IN 94-14 including Supplement 1, "Failure to Implement Requirements for Biennial Medical Examinations and Notification to the NRC of Changes in Licensed Operator Medical Conditions"

3.13 NRC Information Notice 97-66, "Failure to Provide Special Lenses for Operators Using Respirator or Self-Contained Breathing Apparatus During Emergency Operations"

3.14 NRC Information Notice 99-05, "Inadvertent Discharge of Carbon Dioxide Fire Protection System and Gas Migration"

3.15 NRC Form 396, "Certification of Medical Examination by Facility Licensee"

3.16 NRC Form 398, "Personal Qualification Statement – Licensee"

3.17 NUREG 1021, "Operator Licensing Examiner Standards for Power Reactors"

3.18 NUREG 1262, "Answers to Questions at Public Meetings Regarding Implementation of Title 10, Code of Federal Regulations, Part 55 on Operators' License"

3.19 Regulator Issue Summary (RIS) 2007-29, "Clarified Guidance for Licensed Operator Watch-Standing Proficiency"

3.20 U.S. Nuclear Regulatory Commission Regulatory Guide 1.134, "Medical Evaluation of Licensed Personnel at Nuclear Power Plants"

3.21 SH-GEN-039, "NRC Licensed Operator Physical Examination"

4.0 Definitions

4.1 Learning Management System (LMS)

A Learning Management System refers to a database maintained by the Training Department and is used to administer computer-based instruction and to determine individual qualification status.

4.2 No Solo

No Solo refers to a licensee with a special NRC license restriction. For example, a typical restriction requires that another person, capable of summoning assistance, be present when the licensee is manipulating controls. Specific requirements may vary and are described in NUREG 1021 as follows:

"An RO who is at risk of sudden incapacitation may have a no-solo restriction that requires another licensed operator to be in view when the restricted operator is performing control manipulations, and someone capable of summoning assistance to be present at all other times while the restricted operator is performing licensed duties. The analogous SRO restriction would require another licensed operator to be in view when the restricted operator

is performing control manipulations, and another senior operator to be present on site at all other times while the restricted operator is performing SRO licensed duties or someone capable of summoning assistance to be present at all other times while the restricted operator is performing RO licensed duties."

5.0 Responsibilities

5.1 The Southern Nuclear Fleet Training Manager is the Corporate Functional Area Manager (CFAM) who shall be accountable for the governance and oversight of this procedure.

5.2 The Site Vice President or Senior Management Representative Onsite shall be responsible for approving NRC Forms and Letters.

5.3 The Training Department Manager is the Site Functional Area Manager (SFAM) who shall be accountable for performance in the use of this procedure.

5.4 The Operations Department Manager shall be accountable to maintain oversight and ensure that License Operators are properly qualified prior to performing Licensed Operator duties.

5.5 The Medical Service Group shall be responsible for the following:

- The completion of the License Operator physical examinations.
- Determining when a physical examination is due and electronically notifying the Licensed Operator.
- Completing appropriate sections of NRC Form 396.
- Determining if a medical condition requires a restriction to be added to a license.
- Updating medical items in the Learning Management System (LMS).
- Notifying the Operations Training Group and supervision of any discovered or reported change in medical condition that impacts a License Operator's License.
- Initiating a Condition Report to evaluate a medical condition that may result in a License restriction change.

5.6 The Operations Training Group/Operations Training Coordinator shall be responsible for the following:

- The processing of NRC Forms.
- Updating the LMS when there is a change to a Licensed Operator's status or training has been completed.
- Tracking of license maintenance hours.

5.7 The Licensed Operator shall be responsible for the following:

- Contacting Medical Services to schedule physical examinations.

- Notifying their Supervisor and Medical Services of any change in physical condition.
- Ensuring they are qualified prior to performing Licensed Operator duties.

6.0 Procedure

6.1 Active Licensed Duties

10 CFR 55.4 defines "actively performing the functions of an Operator or Senior Operator" to mean that a licensed operator has a position on the shift crew that requires the individual to be licensed as defined in the facility's technical specifications, and that the Licensed Operator carries out and is responsible for the duties covered by that position.

For purposes of this procedure, actively performing the functions of an Operator or Senior Operator (i.e., active licensed duties) is defined as follows:

- On-shift as Operator at the controls (OATC)
- On-shift as Unit Operator (UO)
- On-shift as Shift Supervisor (SS)
- On-shift as Shift Manager (SM)
- Supervision of core alterations as SRO

6.2 Biennial Licensed Operator Medical Examination (Refer to Attachment 2)

Biennial is a time period equal to 730 days with the flexibility that the examination can be any time during the anniversary month and therefore slightly longer than 730 days. Every licensed individual shall have a biennial medical examination as follows:

6.2.1 The Medical Services Group shall determine who is due for a physical by running a Trainee Learning Needs Requirement Report in the LMS. The LMS or Medical Service Group shall notify the Licensed Operators of the required medical examination using a memo or electronic mail.

6.2.2 The Licensed Operator shall contact the Medical Services Group and schedule their medical examination to ensure that the exam is completed by the last day of the month in which the medical examination is due.

6.2.3 The Medical Services Consultant shall ensure the physician completes the medical examination. The physician shall document the findings on the Medical Examination Report (MER).

6.2.4 The Medical Services Consultant shall complete the appropriate sections of the Licensed Operator's NRC Form 396 and forward it to the Operations Training Group. If the Medical Services Consultant marks "restriction change from previous submittal" on the NRC Form 396, the Medical Services Consultant shall notify the Operations Training Group within five (5) working days of the medical examination. Upon completion of the NRC Form 396, the Medical Services Group shall create a learning event for the individual for item S-MEDNRC in the LMS for the date the exam was completed.

6.2.5 The Operations Training Group shall review the completed NRC Form 396 for restriction changes from any previous submittal. If a restriction has changed, the Site Vice President shall sign the NRC Form 396. The NRC Form 396, and a letter explaining the changes, shall be mailed to the NRC per 10 CFR 55.25 within 30 days of the determination by the physician that the restriction has changed. Training shall transmit a copy of the completed Form to Document Control. The Operations Training Group shall keep a copy of the completed NRC Form 396 for the duration of the Licensed Operator's license plus two (2) years. Notification of a restriction change will be via a telephone call to Line Management followed by a written memo to the affected Licensed Operator and to Operations Management. Attachment 1 is provided as an example.

6.2.6 If there is no restriction change, the Operations Training Group shall route the NRC Form 396 to the Site Vice President for signature. The Form shall then be transmitted to Document Control. The Operations Training Group shall keep a copy of the completed NRC Form 396 for the duration of the Licensed Operator's license plus two (2) years.

6.3 Evaluation of Changes in the Physical Conditions of Licensed Operators (Refer to Attachment 3)

6.3.1 Any Licensed Operator shall notify their Supervisor and the Medical Services Group of any change in their physical or mental condition. The following changes, refer to Attachment 4 for a list of examples, include, but are not limited to:

- Wearing corrective lenses
- Taking prescription medicine
- High blood pressure
- Surgery
- Any condition that restricts the range of motion of an extremity (e.g., back, neck, shoulder, etc.)
- Any mental health condition (i.e., depression, anxiety, etc.) or treatment for drug or alcohol abuse.
- Any condition evaluated by ANSI 3.4, 1983

6.3.2 The Supervisor shall notify the Operations Training Group and the Medical Services Consultant of any change in the Licensed Operator's physical condition.

6.3.3 The Medical Services Consultant shall initiate an evaluation of the reported condition for changes in the Licensed Operator's license or for removal from active licensed duties, if necessary. In addition, the Medical Services Consultant shall generate a Condition Report to ensure timely notification made to NRC.

6.3.4 If the condition results in the need for a permanent change in the Licensed Operator's license, the Medical Services Consultant shall complete NRC Form 396 and forward it to the Operations Training Group.

6.3.5 If a restriction has changed, the Operations Training Group shall forward the NRC Form 396 to the Site Vice President for signature. After the Site Vice President approves the NRC Form 396, the approved (i.e., signed) Form and accompanying letter explaining the changes shall be mailed to the NRC. The 10 CFR 55.25 requires this notification be complete within 30 days of the determination by the physician that the restriction has changed. Training shall retain a copy of the completed Form 396. The Operations Training Group shall keep a copy of the completed NRC Form 396 for the duration of the individual's license plus two (2) years. Notification of a restriction change to the appropriate department will be via a memo or electronic mail.

6.3.6 The Operations Training Group shall notify Operations Management and the individual, via an electronic or hard copy memo, if the condition requires removal from active licensed duties as defined in this procedure. In addition, a learning event shall be entered in the LMS. In the Comment section, record that the block is due to medical status hold.

6.3.7 The Medical Services Consultant shall notify the Licensed Operator and their Supervisor, per the applicable Medical Services Group procedures, if the condition results in a temporary restriction that does not require removal from active licensed duties.

6.3.8 When the physician restores the Licensed Operator to active licensed duties, then the Medial Services Consultant shall notify the Operations Training Group. The Operations Training Group shall notify the Licensed Operator and their Supervisor via a memo or electronic mail that the Licensed Operator is restored to active licensed duties. A learning event shall be entered in the LMS. In the comment section, record that the medical hold is removed.

6.4 License Renewal

The Operations Training Group shall initiate renewal of a Licensed Operator's license as required by 10 CFR 55 as follows:

6.4.1 The Operations Training Group shall determine whose license is due for renewal by running a Trainee Learning Needs Requirement Report in the LMS.

6.4.2 The Operations Training Group shall complete the renewal application per the instructions on NRC Form 398 and NUREG 1021 and then forward the application to the Licensed Operator for their review and signature.

6.4.3 After the Licensed Operator signs the NRC Form 398, they shall return it to the Operations Training Group who will then route the NRC Form 398 and the individual's most recent NRC Form 396 to the Training Manager for review and approval.

6.4.3.1 The Training Manager shall sign the NRC Form 396 after the individual and then send the signed form to the Site Vice President.

6.4.4 The Operation Training Group shall mail the original and two (2) copies of the NRC Form 398 and the NRC Form 396, along with a cover letter to the NRC, per 10 CFR 55, at least 30 days prior to expiration of the Licensed Operator's license. Refer to Attachment 5 for a sample cover letter.

6.4.5 When the license renewal has been signed and mailed to the NRC in a timely manner (i.e., at least 30 days prior to expiration) the Operations Training Group shall create a learning event for the Licensed Operator for the appropriate item in the LMS for the date the license renewal was submitted.

6.4.6 Upon receipt of the license, renewal from the NRC the Operations Training Group shall edit the learning event for the Licensed Operator for the appropriate item in the LMS for the date the license was effective.

6.5 Maintenance of an Active License

Only a Licensed Operator with an active license shall be allowed to manipulate the controls or supervise the manipulation of the controls of the reactor.

6.5.1 Per NUREG 1262 Q. 293, a newly Licensed Operator is considered to have met the proficiency requirements for an active license for the initial calendar quarter in which the license was issued.

6.5.1.1 Upon receipt of a new license, a learning event shall be created for the Licensed Operator to give credit for proficiency.

6.5.2 NUREG 1021 states:

"In accordance with 10 CFR 55.53 (e), licensed operators are required to maintain their proficiency by actively performing the functions of an operator or senior operator on at least seven 8-hour or five 12-hour shifts per calendar quarter. This requirement may be completed with a combination of complete 8- and 12-hour shifts (in a position required by the plant's technical specifications) at sites having a mixed shift schedule, and watches shall not be truncated with the minimum quarterly requirement (56 hours) is satisfied. Overtime may be credited if the overtime work is in a position required by the plant's technical specifications. Overtime as an extra "helper" after the official watch has been turned over to another watch stander does not count toward proficiency time."

6.5.2.1 Maintenance of an active license requires that an individual spend seven (7) eight-hour shifts or five (5) twelve-hour shifts in a position that requires the license per the Technical Specifications (i.e., OATC, UO, SS, SM, or SRO during Core Alterations as defined in Technical Specifications) in a calendar quarter.

6.5.2.2 If an individual stands a combination of complete 12 or eight-hour shifts that total 56 hours in the quarter, this requirement is satisfied. A shift of less than eight (8) hours does not count toward the 56-hour total. If an individual spends this shift time in a position that only requires an RO license (i.e., UO, OATC), then they are an active RO only. If they spend this time in an SRO position (i.e., SS, SM) they are an active SRO. If they spend this time as SRO in charge of fuel handling during Core Alterations, they are an active SRO only for supervising Core Alterations.

6.5.2.3 In order to maintain the supervisory portion of the SRO license active, a SRO must stand at least one (1) complete watch per calendar quarter in an SRO-only supervisory position. The remainder of complete watches required in a calendar quarter may be performed in either a credited SRO or RO position. These shifts must be on a unit that has fuel in the vessel. If a Licensed SRO stands all of their required proficiency watches in an SRO position, the RO portion of the license is still considered active. Performing the required number of shifts per calendar quarter on a single unit maintains the license active for all similar units on an individual's license.

6.5.3 The active Licensed Operator shall complete NMP-TR-406-F01 once per quarter to document these proficiency hours and forward the form to the Operation Training Coordinator.

6.5.4 The Operations Department Training Coordinator or designee shall maintain a record of these hours and create a learning event for each Licensed Operator who meets the SRO requirement or for each Licensed Operator who meets the RO requirement. Failure to meet the time requirements for hour's on-shift places that level of license (i.e., RO, SRO) in an "Inactive" status. The Licensed Operator shall not be allowed to stand shift in a position that requires that level of license until they have completed reactivation per this procedure. Operations supervision and the Licensed Operator shall be notified by the Operations Training Group or the Operations Training Coordinator if the Licensed Operator's license is placed in an 'Inactive' condition.

6.5.5 An active license requires an Licensed Operator maintain medical certification and must:

6.5.5.1 Maintain medical certification for respirator use per the applicable Safety and Health procedure.

6.5.5.2 Have dosimetry issued.

6.5.5.3 Have contacts or respirator glasses readily available to correct vision to within the limits of ANSI 3.4, 1983

6.5.6 The following training requirements must be met to be in an active status:

6.5.6.1 Current in Licensed Operator Continuing Training (LOCT) as demonstrated by showing qualification complete in the LMS.

6.5.6.2 Current in respirator medical per the LMS qualifications S-MEDRES49 or S-MEDRES50.

6.5.6.3 Current in respirator training per the LMS qualification.

6.5.6.4 Current in self-contained breathing apparatus (SCBA) training per the LMS.

If a Licensed Operator fails to meet the respirator or training requirements above, they may be removed from a shift position that requires an active license until the requirement is met. The Operations Training Group shall notify Operations Management of the required removal from active licensed duties via a telephone call to Line Management followed by a written memo.

6.6 License Reactivation

NOTE	All items shall be completed within the same quarter.

In order to reactivate an RO or SRO license, 10 CFR 55 paragraph 55.53(f) requires:

6.6.1 Before resumption of functions authorized by a license issued under this part, an authorized representative of the facility shall certify the following:

That the licensee has completed a minimum of 40 hours of shift functions (i.e., UO or OATC for RO; SS or SM for SRO) under the direction of an Operator or Senior Operator (i.e., SS or SM) as appropriate and in the position to which the individual will be assigned. The 40 hours must have included a complete tour of the plant and all required shift turnover procedures." The 40 hours must be on a unit that has fuel in the vessel and be performed in the same calendar quarter. Refer to 2.14 page 78, question 277 of NUREG 1262.

6.6.2 The above means that the individual will stand shift with the person in the stated position. The individual reactivating may only be separate from the person who signs for the time credited for infrequent (i.e., 1-2 times in a shift) brief periods. The Plant Tour is part of the 40 hours of shift functions. At least one shift turnover at the beginning of shift and one at the end of shift must be observed.

6.6.3 Only one individual per licensed position may reactivate under the direction and in the presence of a Licensed Operator or Senior Operator.

6.6.4 The Licensee reactivating shall ensure entries are made in the Control Room Operator Log for the time period involved in reactivation. Plant Tours shall also be documented in the Control Room Operator Log.

6.6.5 Complete NMP-TR-406-F03 of this procedure and return it to the Lead Instructor – Operations Continuing Training or the Training Supervisor – Operations.

6.6.6 Operations Training Supervision shall forward the form to the Operations Manager for approval.

6.6.7 After the Operations Manager or designee approves the reactivation form, it shall be returned to the Operations Training Group. Training shall then create a learning event in the LMS for Reactivation. Training shall transmit the original to Document Control.

6.6.8 The Licensed Operator does not have to stand any more shifts through the end of the quarter in which they reactivated.

6.6.9 The license will remain active until the Licensed Operator fails to meet the requirements of this procedure to maintain an active license.

6.6.10 All items of NMP-TR-406-F03, up to and including the Operations Manager's signature for reactivation approval, shall be completed within the same calendar quarter.

6.7 Reactivation of a Senior Reactor Operator for Supervising Core Alterations

NOTE	**Reactivation of the Core Alterations license is only good for one refueling outage and the license shall be de-activated in LMS at the end of the refueling outage.**

In order to reactivate a SRO license for supervising Core Alterations only, NUREG 1021 states:

> The NRCs requirements regarding the conduct of under-instruction or training watches are reflected in 10 CFR 55.13, which allows trainees to manipulate the controls of a facility "under the direction and in the presence of a licensed operator or senior operator..." This position is also evident in the responses to Questions 252 and 276 in NUREG 1262, "Answers to Questions at Public Meetings Regarding Implementation of Title 10, Code of Federal Regulations, Part 55 on Operators' Licenses," which indicate that a trainee's activities are to be closely monitored by the responsible person.

6.7.1 If a facility licensee needs to reactivate a regular SRO license for the purpose of supervising refueling activities, the Operator must complete one of the following two (2) options:

6.7.1.1 Option 1 – Review core alterations training material, or receive Instructor lead training, and perform evaluated job performance measures (JPMs). This option will ideally be completed no more than one (1) week prior to a refueling outage.

6.7.1.2 Option 2 – The Operator must complete one shift under direction on the refueling floor, as discussed above, and the facility licensee must ensure that the Operator is administratively restricted from performing full SRO duties. Only one individual at a time may reactivate under the direction and in the presence of the Senior Operator in charge of refueling.

6.7.2 The individual reactivating shall ensure entries are made in the Control Room Operator Log for the time period involved in reactivation.

6.7.3 Complete NMP-TR-406-F02 of this procedure and return it to the Operations Training Group.

6.7.4 After the requirements of NMP-TR-406-F02 are completed Training shall transmit the original to Document Control.

6.8 Respirator Glasses

6.8.1 Any Licensed Operator whose license is restricted to corrective lenses shall have contacts or respirator glasses readily available to correct their vision to within the limits of ANSI 3.4, 1983 while performing licensed duties.

6.8.2 When a Licensed Operator is initially restricted to corrective lenses, Operations shall be notified by the Operations Training Group via a memo or electronic mail, and this memo will state the need for respirator lenses or contacts.

6.8.3 It shall be the responsibility of the Licensed Operator to ensure that the respirator glasses or contacts will bring them into compliance with the requirements of ANSI 3.4, 1983.

6.9 No Solo Operation

6.9.1 If a Licensed Operator's license is amended to "No Solo Operation", then the No-Solo requirements shall be met for them to perform active license duties.

6.9.2 A No Solo SRO may be Fueling Handling Supervisor as long as the crew is made aware of the content and implication of the No Solo restriction. However, another SRO shall be onsite and someone capable of summoning the SRO shall be in view of the No Solo SRO.

6.10 Nuclear Regulatory Commission Correspondence

6.10.1 Correspondence to the NRC related to licensee medical condition change, recommended license restriction change, or license renewal applications shall be dispatched in a manner that provides verification of receipt. The verification documentation shall be included in the disposition of Condition Report or Action Item.

6.10.2 When verification is received that correspondence has been delivered, it is recommended that a follow-up phone call be made to confirm.

6.11 License Termination

6.11.1 When an individual no longer requires a license, the NRC shall be requested in 30 days to terminate the individual's license. Refer to Attachment 6 for a sample letter.

6.11.2 The Operations Training Supervisor or Designee shall initiate a Condition Report once notified to terminate an Operator License to track the 30 day notification.

6.11.3 The Operations Training Supervisor or Designee shall ensure that LMS is updated.

7.0 Records

7.1 All records shall be maintained per appropriate site procedures.

QA records (X)	Non-QA records (X)	Record Generated	R-Type
X		Active License Maintenance	TR0.001
X		Senior Reactor Operator Reactivation for Core Alterations	TR0.001
X		License Reactivation Documentation	TR0.001

8.0 Commitments

8.1 Farley

None

8.2 Hatch

None

8.3 Vogtle

None

Attachment 1

Nuclear Regulatory Commission Medical Restriction Change Letter Sample

XXXXX (insert name of Regional Administrator, Region II)
The Regional Administrator, Region II
United States Nuclear Regulatory Commission
245 Peachtree Center Avenue, NE Suite 1200
Atlanta, Georgia 30303-1257

Attention: Mr. XXXX XXXXX : (insert name of Chief, Operations Branch)

Dear XXXXX: (Insert name of Regional Administrator, Region II)

This letter is to inform you that NAME, docket number 55-XXXXX and license number OP-XXXXX-X, has had a change in his medical condition as indicated on the attached per ANSI/ANS 3.4, 1983.

This information is regarded as Privacy Act Information and should be treated as such.

Sincerely,

_____
X X. XXXXXX
Site Vice President

JRJ/DDH:las

cc: Site Training Manager (without attachments)
Site Occupational Health Svcs. Lead Spc. (without attachments)
INDIVIDUAL (with attachments)

Attachment 2

Routine Nuclear Regulatory Commission License Medical Examination Flowpath

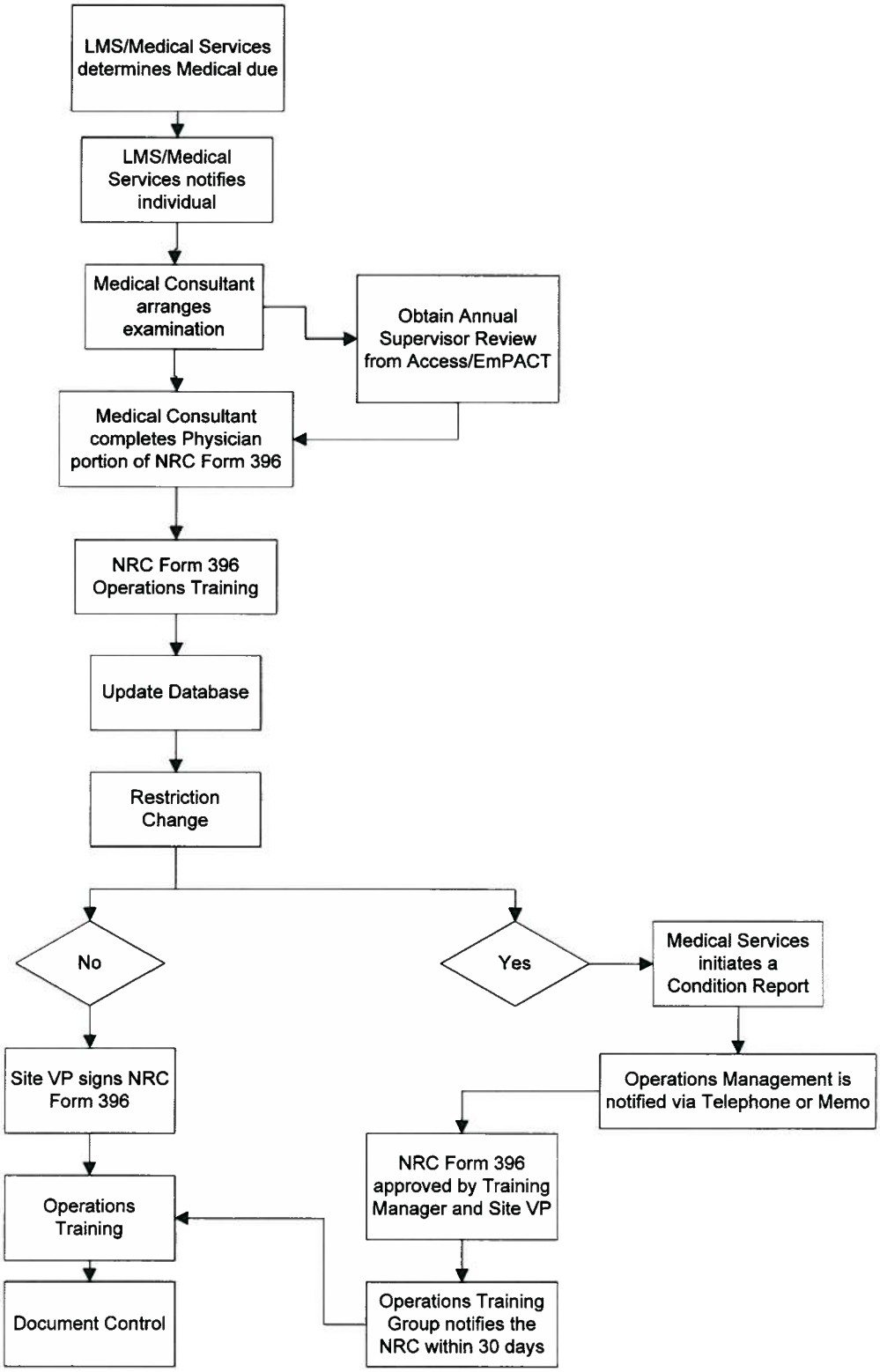

Attachment 3

Medical Condition Flowpath

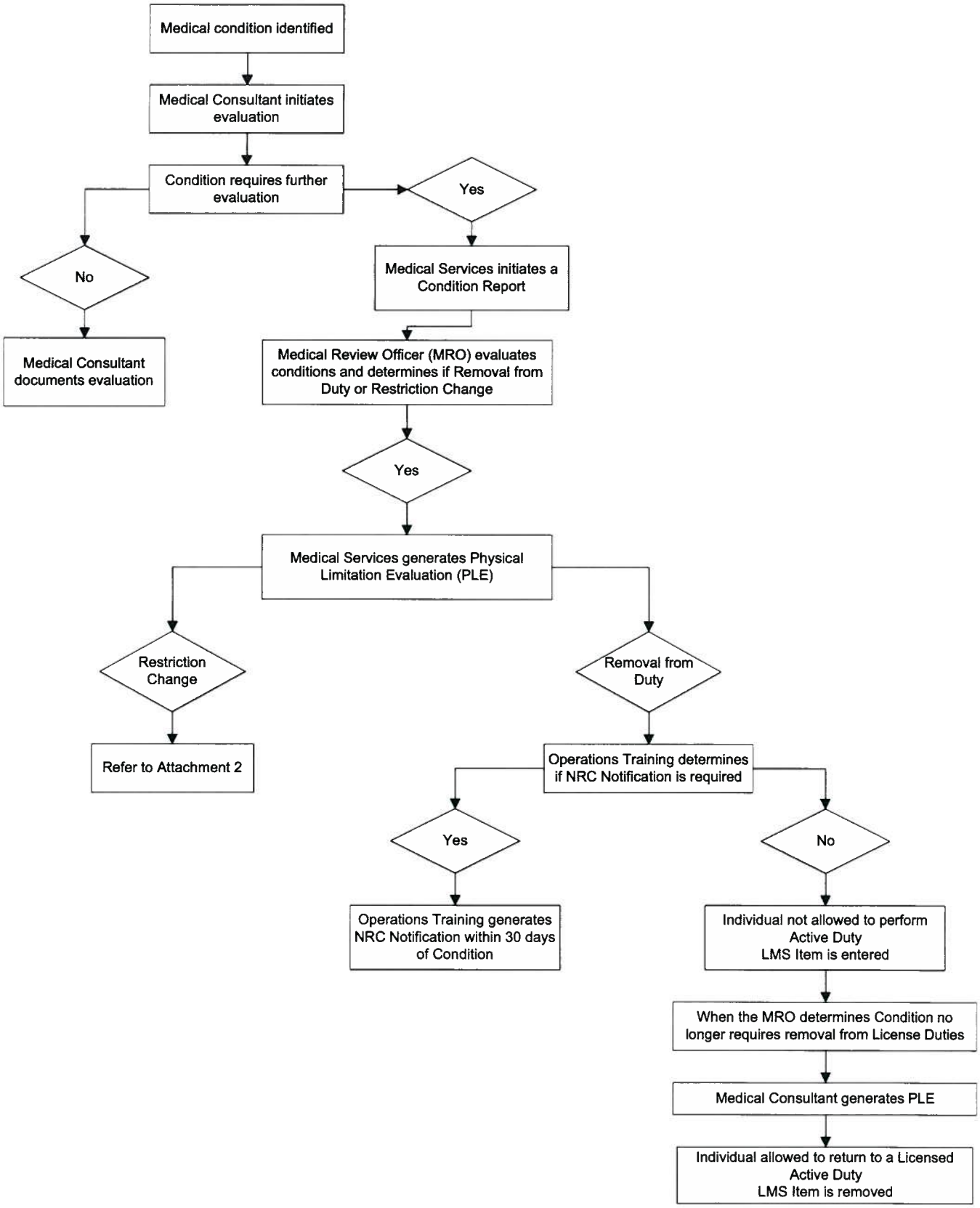

Attachment 4

Medical Conditions List

Intra-company Correspondence

TO: Licensed Operators

Listed below are some of the Medical Conditions that Licensed Operators shall be aware of that can or may have an affect on their license status and require evaluation by Medical Services:

NOTE:	**These guidelines not all-inclusive and are based on ANSI/ANS 3.4-1983. There are many situations and conditions that could affect a person and the licensee should remember that he or she is the one ultimately responsible for the "Safe Operation of the Nuclear Power Plant". Any change in your medical condition shall be reported to the Medical Department.**

NOTE:	**Please contact the Medical Services Consultant or the Lead Instructor – Operations Continuing Training at any time if you have questions concerning the above.**

1. Asthma
2. Emphysema
3. Heart Attack or any other heart condition including High Blood Pressure
4. Diabetes (Use of insulin shall disqualify Operator for Solo Operation)
5. Medical conditions requiring frequent or continued use of steroids (i.e., Lupus, Arthritis, or any other Collagen disorder)
6. Severe recurrent dermatitis (e.g., skin rashes) which could interfere with the wearing of personal protective equipment or decontamination procedures
7. Any abnormal blood work (i.e., blood studies that might indicate Anemia, infection, etc.)
8. Any form of cancer
9. Seizures (A history of Epilepsy shall disqualify the Operator for Solo Operation)
10. Depression, anxiety attacks, etc.
11. Any prescription medication

NOTE:	**Medications that can be taken safely and without adverse side affects by one person may have the opposite effect on another, thus evaluating the effect of medication must be done on an individual basis.**

12. Any medication taken that could have an effect on an Operator's ability to perform (i.e., cold medication such as Drixoral, Actifed, etc. that could cause drowsiness, pain medication such as Tylenol #3, Demerol, Darvocet, etc. tranquilizers and anti-depressants such as Elavil, Sinequan, Prozac, Xanax, etc.; antihistamines such as Benadryl, Atarax, etc., and narcotics.
13. Any change in vision (i.e., new corrective lenses, prescription, being told by a doctor that corrective lenses are needed, Radial Keratotomy, etc.)
14. Any loss of mobility (i.e., sprained ankle, which may cause an Operator to need crutches, a hand or wrist splint/cast, etc.)
15. Sleep Apnea
16. Any other condition that could affect an Operator's ability to perform "under normal, abnormal, and emergency conditions".

Attachment 5

License Renewal Letter
Sample

May 2, 2005

XXXX (insert name of Regional Administrator, Region II)
The Regional Administrator, Region II
United States Nuclear Regulatory Commission
245 Peachtree Center Avenue, NE Suite 1200
Atlanta, Georgia 30303-1257

Attention: Mr. XXXX XXXXX: (insert name of Chief, Operations Branch)

Dear XXXXX: (insert name of Regional Administrator, Region II)

Please find attached the Personal Qualification Statement--Licensee, NRC Form 398 and the Certification of Medical Examination by Facility Licensee, NRC Form 396, for Mr. Xxx Xxxxxxx Docket number 55-XXXXX, license number SOP-XXXXX-X, and Mr. Xxxx X. Xxxxx, Docket number 55-XXXXX, and license number OP-XXXXX-X.

If you have any questions about these documents, please contact Training Supervision at XXX-XXX-XXXX.

Sincerely,

_____
X.X. XXXXXX
Site Vice President

JRJ/DDH:las

Enclosure

cc: Site Training Manager (without attachments)
File

Attachment 6

License Termination Letter
Sample

June 28, 2010

Mr. XXXXX XXXXXXX
Regional Administrator, Region II
United States Nuclear Regulatory Commission
245 Peachtree Center Ave., NE, Suite 1200
Atlanta, GA 30303-1257
Attention: Mr. XXXXX XXXXXXX

Dear Mr. XXXXXX:

This letter is to notify you that Southern Nuclear has determined that the individual listed below no longer has a need to maintain an operating license and therefore request that his license be terminated.

Mr. XXXX XXXX Docket 55-XXXXX License OP-XXXXX

If you should have any questions regarding this matter, please contact Training Supervision at XXX-XXX-XXXX.

Sincerely,

_____
XXXXXXX
Site Vice President

cc: Lead Instructor – Continuing
File

Southern Nuclear Operating Company			
SOUTHERN COMPANY	Nuclear Management Form	Active License Maintenance	NMP-TR-406-F01 Version 1.0 Page 1 of 1

Name: _____

NOTE: In order to maintain the supervisory portion of a Senior Reactor Operator (SRO) active license, a SRO must stand at least one complete watch (i.e., an 8 or 12 hour shift) per calendar quarter in an SRO-only supervisory position. The remainder of the complete watches in a calendar quarter may be performed in either a credited Reactor Operator (RO) or SRO position.

Year: _____

☐ 1st Quarter (01/01 – 03/31) ☐ 2nd Quarter (04/01 – 06/30)

☐ 3rd Quarter (07/01 – 09/30) ☐ 4th Quarter (10/01 – 12/31)

Time On-shift
(Technical Specifications Positions)*

Shift Manager, Shift Supervisor, RO (OATC), RO (UO), Fuel Handling Supervisor*

Hours	Date	Position	Unit

I have completed the required license maintenance activities (e.g., applicable medical notifications, proficiency time, and respirator updates) in accordance with NMP-TR-406.

_____
Licensed Operator's Signature Date

NOTE: Forward the completed form to the Operations Training Coordinator or designee.

The minimum hours on-shift have been met and the individuals below have actively performed the function of an Operator or Senior Operator for five (5) 12-hour shifts or seven (7) 8-hour shifts and shall maintain an Active License through the _____ Quarter, _____ Year and the LMS has been updated.

_____
Operations Training Coordinator or designee Date

Name: _____

Part I – Qualifications

1. The individual has a valid Senior Reactor Operator license on the appropriate Unit.

   _____
   Training Department Representative Date Verified

2. The individual is current in the License Operator Continuing Training (LOCT) program.

   _____
   Training Department Representative Date Verified

3. The individual has completed a medical examination per NMP-TR-406 (i.e., the Learning Management System (LMS) qualification S-MEDNRC current) and is not removed from active licensed duties for medical reasons.

   _____
   Training Department Representative Date Verified

4. If an individual is restricted to corrective lenses on their license that individual shall verify that the glasses or contacts are readily available and they must be worn when filling a position that requires an active license for supervising Core Alterations.

   _____
   Individual Signature Date Verified

Name: _____

Part II – Training and Evaluation

NOTE:	**Option 1 or Option 2 shall be performed. The Option not selected will be marked "Not Applicable".**

Option 1

1. The individual received training or reviewed the training material for performing Core Alterations.

   _____
   Individual Signature Date Verified

2. The individual successfully completed the evaluated job performance measures (JPMs).

   _____
   Training Department Representative Date Verified

Option 2

1. The individual shall complete one shift under direction supervising Core Alterations on the refueling floor. An entry shall be made in the Control Room Operator Log to document the shift.

   The signature below means that the individual stood a shift, including turnover at beginning and end of shift, with the person signing. Supervising SROs can have no more than one individual reactivating at a time.

   _____
   Supervising Senior Reactor Operator Date Verified

Name: _____

Part III – Approval and Documentation

1. I understand that I cannot perform any other duties requiring an active license other than supervising Core Alterations.

   _____
   Individual Signature Date Verified

2. Reactivation Approved

   _____
   Operations Manager Date Verified

3. Documentation

   a. The LMS item has been updated.

   _____
   Operations Training Coordinator or designee Date Verified

NOTE:	**Forward this Form to the Operations Training Department.**

   b. The LMS item has been verified.

   _____
   Training Department Representative Date Verified

Name _____ LMS ID _____

Position: ☐ Reactor Operator ☐ Shift Supervisor ☐ Shift Manager

NOTE: To qualify a Plant Operator who has recently obtained an SRO license, if the re-activation is in calendar quarter in which the SRO license was obtained, Sections 1.0 and 2.0 of this form are not required. Refer to NUREG 1262, Q. 293.

NOTE: Refer to NMP-TR-406, Section 6.6 for guidance.

Part 1.0 – 40 Hours under Supervision

Section I

Hours	Date	Qualified Person's Signature

Section II

Participate in a minimum of one shift turnover at the beginning of shift and one at the end of shift

Turnover	Date	Qualified Person's Signature
Beginning of Shift		
End of Shift		

Part 2.0 – Plant Tours Complete

NOTE:	**Tours are part of the required 40 hours per 10 CFR 55.53 (f)(2).**

NOTE:	**Part 2.0 contains sections to be completed for Plants Farley, Hatch, and Vogtle. Complete the section for the applicable site and mark the other two sections "Not Applicable".**

Licensee Signature Date

Plant Tour with an Active License at the "Same" or "Higher Level" for the position for which you are activating. These Tours shall be recorded in the Control Room Operator Log. The Plant Tour should include, but not be limited to, areas listed for each major structure identified in this section. Areas in both Units, where applicable, should be included in the Tour. The qualified person shall sign to document the Tour was completed.

NOTE:	**The completed Tours shall include all Rounds Areas and shall also be included as part of the 40 hour re-activation.**

Section I – Plant Farley

Areas	Qualified Person Conducting Tour Signature	Date
Non-Rad Auxiliary Building (DC Swgr Rooms, Rod Control Equipment Room, 4160 Swgr Rooms, CCW HX Room, AFW Pump Rooms, MSVR, CR HVAC Room, Cable Spreading Room)		
Rad-Side Auxiliary Building (Chg Pump Rooms, RHR Pump Rooms, RHR HX Room, Penetration Rooms, CS Pump Rooms, SFP and SFP Pump Room, Filter Room)		
Turbine Building (All elevations)		
DG Bldg/Outside Tanks Areas (All DG Rooms, Day Tank Rooms, Swgr Rooms, View RMWST, TWST, CST)		
SWIS, RWIS, Fire Pump House (Pump and Swgr Rooms in the Intake Structures, Fire Pump Rooms)		
Additional areas listed below selected by the Shift Manager:		

Section II – Plant Hatch

Areas	Qualified Person Conducting Tour Signature	Date
Unit 1 and Unit 2 Reactor Bldg. 228', 185', 158', 130', and Diagonal Areas		
Unit 1 and Unit 2 Turbine Bldg. 164', 130', and 112'		
Control Bldg. 130' and 112'		
Intake Structure and Diesel Building		
Additional areas listed below selected by the Shift Manager:		

Section III – Plant Vogtle

Areas	Qualified Person Conducting Tour Signature	Date
Turbine Building		
Auxiliary Building		
Control Building		
Outside Building		
Additional areas listed below selected by the Shift Manager:		

Part 3.0 – License Continuing Training Satisfactory

Operations Training Supervisor or designee Date

Part 4.0 – Respirator Qualification Satisfactory
Including Self-Contained Breathing Apparatus (SCBA)

_____
Operations Training Supervisor or designee Date

Part 5.0 – Medical Status Satisfactory

_____
Operations Training Supervisor or designee Date

Part 6.0 – Confirm that the LMS Allows Re-activation

_____
Operations Training Supervisor or designee Date

Part 7.0 – Classification/Emergency Notification Network (ENN) Job Performance Measure
Shift Supervisor/Shift Manager Only, if not done within the last 12 months. Credit may be granted based on successful simulator or drill performance.

_____
Operations Training Supervisor or designee Date

CAUTION:	**COMPLETION OF THIS DOCUMENT DOES NOT CONSTITUTE PERMISSION TO PERFORM LICENSE DUTIES. A SHIFT ELEGIBITY LETTER MUST BE ISSUED STATING THIS INDIVIDUAL IS ELEIGIBLE TO STAND SHIFT.**

Part 8.0 – Operations Manager Approval
Check the appropriate position:

Position: ☐ Reactor Operator ☐ Shift Supervisor ☐ Shift Manager

_____
Operations Manager Date

A2.1.R RO only - Equipment Control ADMIN G2.2.41

TITLE: Determine Isolation Boundaries for a CCW Pump Check Valve.

EVALUATION LOCATION: ☐SIMULATOR ☐CONTROL ROOM ☒CLASSROOM

PROJECTED TIME: 30 MIN SIMULATOR IC NUMBER: N/A

☐ALTERNATE PATH ☐ TIME CRITICAL ☐PRA

JPM DIRECTIONS:

1. Initiation of task may be in group setting, evaluation performed individually upon completion.
2. Requiring the examinee to acquire the required materials may or may not be included as part of the JPM.

TASK STANDARD: Upon successful completion of this JPM, the examinee will:

- Identify the components and positions required to isolate, vent, and drain a section of piping in preparation for maintenance on a CCW discharge check valve.
- Identify the proper sequence of isolation.

Examinee:		
Overall JPM Performance:	**Satisfactory** ☐	**Unsatisfactory** ☐
Evaluator Comments (attach additional sheets if necessary)		

EXAMINER: _____

Developer	Billy Thornton	Date: 2/8/2011
NRC Approval	SEE NUREG 1021 FORM ES-301-3	

CONDITIONS

When I tell you to begin, you are to DETERMINE ISOLATION BOUNDARIES FOR A CCW PUMP CHECK VALVE. The conditions under which this task is to be performed are:

a. Unit 1 is in Mode 4.
b. 1B CCW pump is aligned to B Train.
c. 1C CCW pump was shut down due to a large leak on Q1P17V001C, CCW PUMP 1C DISCHARGE CHECK VALVE.
d. The 1C CCW pump has been Tagged Out electrically.
e. The eSOMS Tagging computer program is not available.
f. You have been directed to manually prepare a Tag Out Listing for isolation of the check valve and draining of the system for repair of the check valve.
g. The Tag Out Listing should identify the **proper components to be operated, correct positioning action, and correct sequence of operation.**

INITIATING **CUE**: IF you have no questions, you may begin.

EVALUATION CHECKLIST

ELEMENTS:	STANDARDS:	RESULTS: (CIRCLE)
_____ **START TIME**		
* 1. Determines that 1C CCW PUMP DISCH ISO, V002C is required to be closed first to isolate the high pressure portion from the lower pressure portions of the system.	**V002C – CLOSED** (See Tag Out sheet)	S / U
* 2. Determines that the three other isolation flowpaths should be closed next.	**V278C – CLOSED** **V109C – CLOSED** **V144C – CLOSED** (Sequence of isolation of these valves does not matter. See Tag Out sheet)	S / U

Note to Evaluator: Steps 3 through 5 may be performed in any order.

* 3. Determines that V281C is required to be open to drain the section between discharge check valve (QV001C) and isolation valve (QV002C).	**V281C –OPEN** (See Tag Out sheet)	S / U

EVALUATION CHECKLIST

ELEMENTS:	STANDARDS:	RESULTS: (CIRCLE)
* 4. Determines that at least one drain valve is opened to drain the pump section of piping. (All drain valves may be opened to facilitate draining, but at least one drain is required to satisfy the Critical portion of this step.)	**V157F – OPEN** **V157E – OPEN** (Either of these valves or both of these valves may be opened, but at least one is required.) (Sequence of opening these valves does not matter. See Tag Out sheet)	S / U
* 5. Determines that at least one vent valve is opened to vent the system. (All vent valves may be opened to facilitate venting, but at least one vent is required to satisfy the Critical portion of this step.)	**V279C –OPEN** **V156F – OPEN** **V156C – OPEN** (Any one of these valves or all of these valves may be opened, but at least one is required.) (Sequence of opening these valves does not matter. See Tag Out sheet)	S / U

_____ **STOP TIME**

Terminate when all elements of the task have been completed.

CRITICAL ELEMENTS: Critical Elements are denoted with an asterisk (*) before the element number.

GENERAL REFERENCES:

1. FNP-1-SOP-23.0A, VER 10.0
2. D175002 SHEET 1
3. NMP-AD-003, VER 13.0
4. NMP-AD-003-001, VER 2.0
5. NMP-AD-003-002, VER 6.0
6. NMP-AD-003-F02, VER 1.0
7. KA: G2.2.41 RO 3.5 SRO 3.9

GENERAL TOOLS AND EQUIPMENT:

1. FNP-1-SOP-23.0A, VER 10.0
2. D175002 SHEET 1
3. NMP-AD-003, VER 13.0
4. NMP-AD-003-001, VER 2.0
5. NMP-AD-003-002, VER 6.0
6. NMP-AD-003-F02, VER 1.0
7. Handout TO for 1C CCW pump electrical
8. Handout for Candidate NMP-AD-003-F02 Tagout Listing

Critical ELEMENT justification:

STEP	Evaluation
1	**Critical:** Task completion: required to determine that the discharge valve should be closed first to isolate the high pressure portion of the system.
2	**Critical:** Task completion: required to determine that all other isolation valves that would isolate the discharge check valve from the rest of the CCW system are to be closed next, prior to opening vents and drains.
3	**Critical:** Task completion: required to open drain valve QV281C to prevent pressurization of piping in case of leakby of the discharge isolation valve.
4	**Critical:** Task completion: required to determine that at least one drain valve in the pump section of piping is to be opened to allow proper drainage for maintenance.
5	**Critical:** Task completion: required to determine that at least one vent valve is to be opened to vent the system to allow proper drainage for maintenance.

COMMENTS:

Clearance: # :	FOR TRAINING USE ONLY
Tagout: #:	HLT-34 NRC EXAM

Tag		Equipment	Placement					Restoration				
Num	Type	Equipment ID Description/Location	Verif	Seq	Configuration Notes	1st Verif	2nd Verif	Verif	Seq	Configuration Notes	1st Verif	2nd Verif
		1C CCW PUMP DISCH ISO Q1P17V002C		1	CLOSED							
		1C CCW PUMP CHEM MIXING ISO Q1P17V278C		2	CLOSED							
		1C CCW PUMP SUCT ISO Q1P17V109C		3	CLOSED							
		1C CCW PUMP MINI-FLOW Q1P17V144C		4	CLOSED							
		1C CCW PUMP DISCH HDR DRN Q1P17V281C		5	OPEN							
		1C CCW PUMP DRN Q1P17V157F		6	OPEN							
		1C CCW PUMP DRN Q1P17V157E		7	OPEN							
		1C CCW PUMP SUCT LINE VT Q1P17V279C		8	OPEN							
		1C CCW PUMP VT Q1P17V156F		9	OPEN							
		1C CCW PUMP VT Q1P17V156C		10	OPEN							

KEY

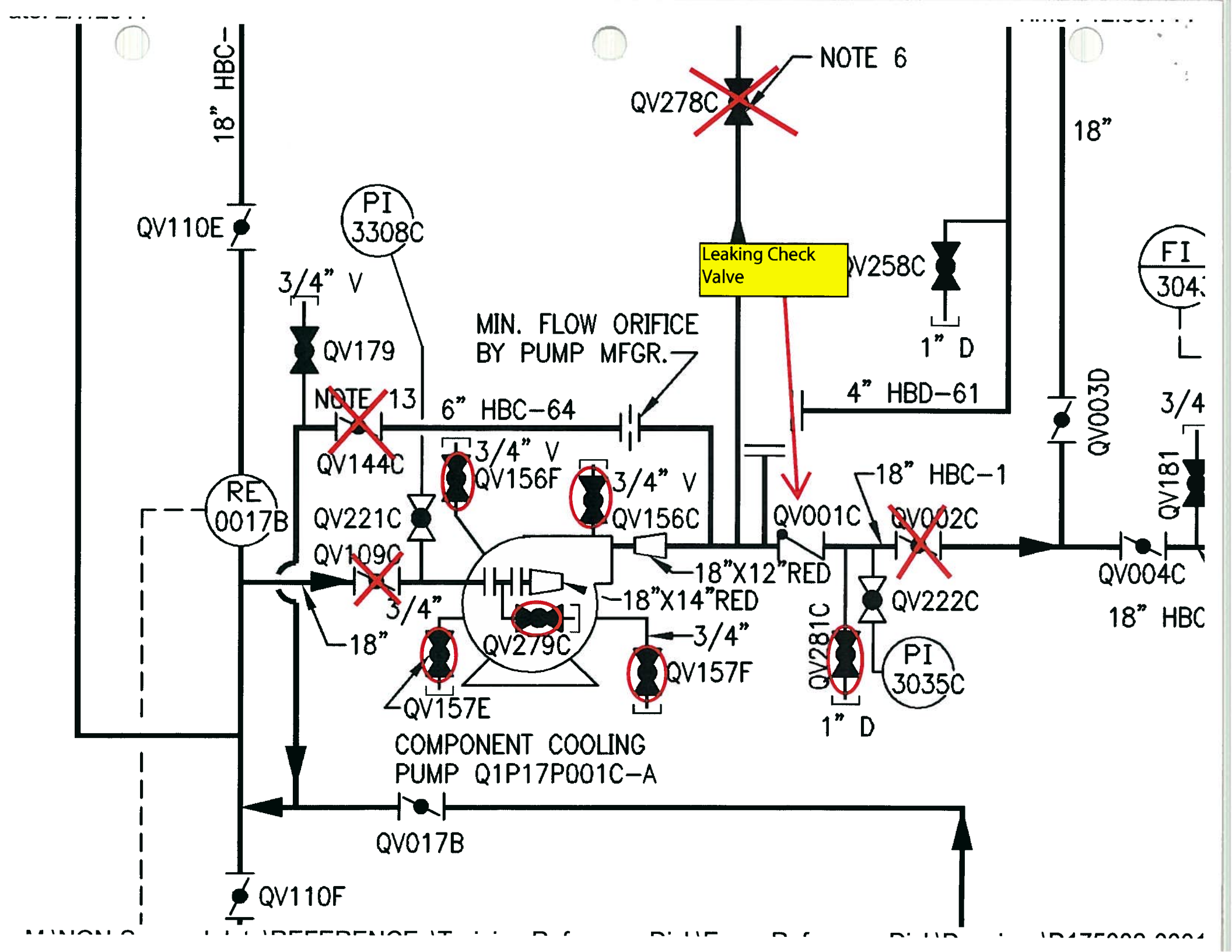
18" HBC-
QV110E
PI
3308C
3/4" V
QV179
NOTE 13
QV144C
6" HBC-64
MIN. FLOW ORIFICE
BY PUMP MFGR.
3/4" V
QV156F
3/4" V
QV156C
RE
0017B
QV221C
QV109C
3/4"
18"
QV279C
QV157E
QV157F
3/4"
18"X14"RED
18"X12"RED
COMPONENT COOLING
PUMP Q1P17P001C-A
QV017B
QV110F
QV278C
NOTE 6
Leaking Check
Valve
QV258C
1" D
4" HBD-61
18"
QV003D
18" HBC-1
QV001C
QV002C
QV222C
QV281C
1" D
PI
3035C
QV004C
18" HBC
QV181
3/4
FI
304

CONDITIONS

When I tell you to begin, you are to DETERMINE ISOLATION BOUNDARIES FOR A CCW PUMP CHECK VALVE. The conditions under which this task is to be performed are:

a. Unit 1 is in Mode 4.
b. 1B CCW pump is aligned to B Train.
c. 1C CCW pump was shut down due to a large leak on Q1P17V001C, CCW PUMP 1C DISCHARGE CHECK VALVE.
d. The 1C CCW pump has been Tagged Out electrically.
e. The eSOMS Tagging computer program is not available.
f. You have been directed to manually prepare a Tag Out Listing for isolation of the check valve and draining of the system for repair of the check valve.
g. The Tag Out Listing should identify the **proper components to be operated, correct positioning action, and correct sequence of operation**.

Clearance: # :	FOR TRAINING USE ONLY
Tagout: #:	HLT-34 NRC EXAM

Tag		Equipment	Placement					Restoration				
Num	Type	Equipment ID Description/Location	Verif	Seq	Configuration Notes	1st Verif	2nd Verif	Verif	Seq	Configuration Notes	1st Verif	2nd Verif
1-DT-11-30,000	DT	1C CCW MCB handswitch Q1P17HS3307CA-A	CV	1	STOP/AUTO	*BT*	*HF*					
1-DT-11-30,001	DT	1C CCW Hot Shutdown Panel Local/Remote Switch Q1P17HS3307CC-A	CV	2	REMOTE	*BT*	*HF*					
1-DT-11-30,002	DT	1C CCW Pump 4160V breaker Q1R15BKRDF04	CV	3	RACKED OUT	*BT*	*HF*					

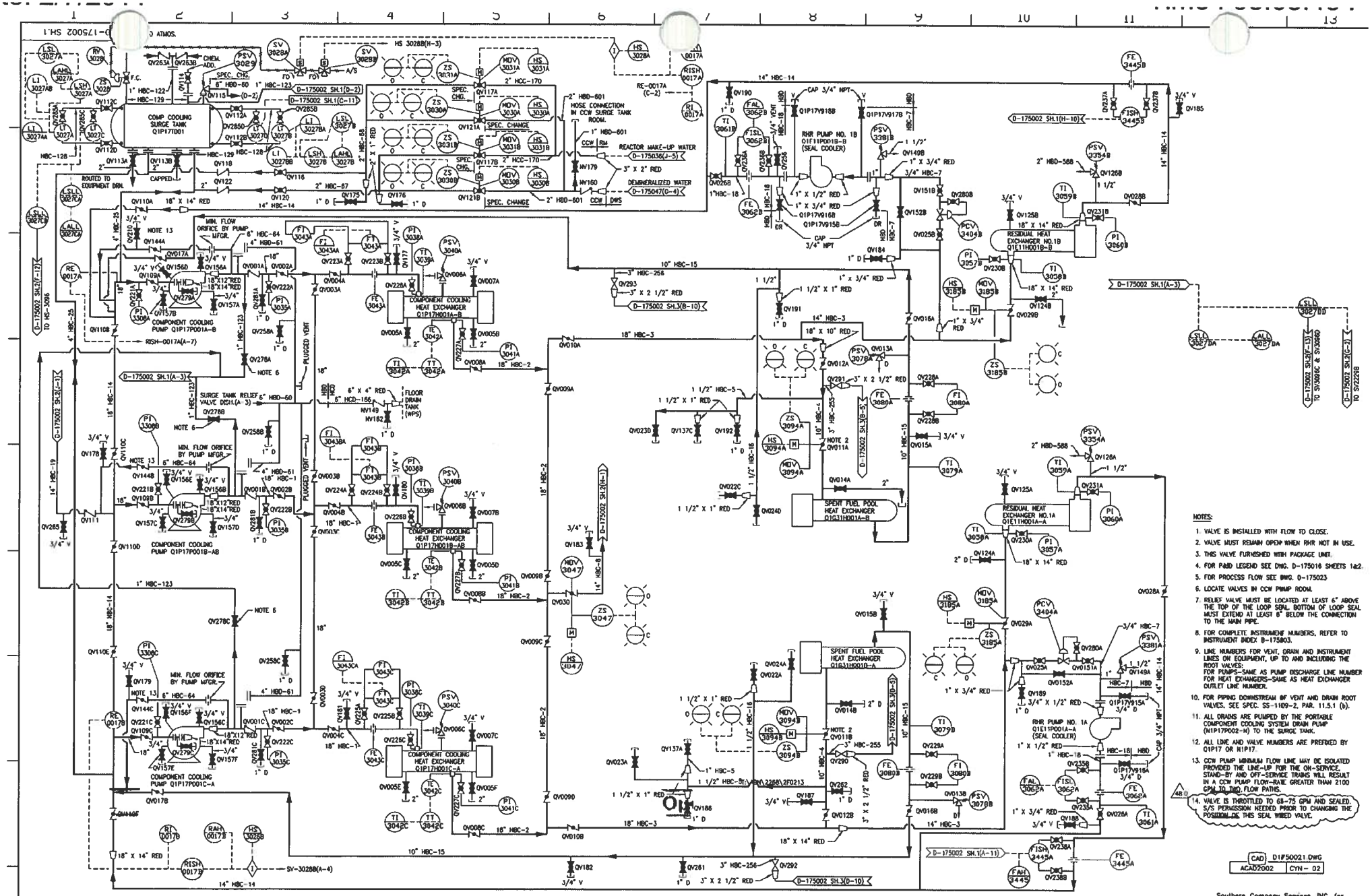
COMP COOLING SURGE TANK Q1P17T001
COMPONENT COOLING PUMP Q1P17P001B-B
COMPONENT COOLING PUMP Q1P17P001B-AB
COMPONENT COOLING PUMP Q1P17P001C-A
COMPONENT COOLING HEAT EXCHANGER Q1P17H001A-B
COMPONENT COOLING HEAT EXCHANGER Q1P17H001B-AB
COMPONENT COOLING HEAT EXCHANGER Q1P17H001C-A
RHR PUMP NO. 1B Q1E11P001B-B (SEAL COOLER)
RESIDUAL HEAT EXCHANGER NO.1B Q1E11H001B-B
SPENT FUEL POOL HEAT EXCHANGER Q1G31H001A-B
SPENT FUEL POOL HEAT EXCHANGER Q1G31H001B-A
RESIDUAL HEAT EXCHANGER NO.1A Q1E11H001A-A
RHR PUMP NO. 1A Q1E11P001A-A (SEAL COOLER)
REACTOR MAKE-UP WATER D-175036(J-5)
DEMINERALIZED WATER D-175047(G-4)
HOSE CONNECTION IN CCW SURGE TANK ROOM
FLOOR DRAIN TANK (NPS)
SURGE TANK RELIEF VALVE DSH.(A-3)
MIN. FLOW ORIFICE BY PUMP MFGR.
PLUGGED VENT
ROUTED TO EQUIPMENT DRN.
CAPPED
D-175002 SH.1(A-3)
D-175002 SH.1(H-10)
D-175002 SH.1(A-11)
D-175002 SH.3(B-10)
D-175002 SH.3(D-10)
D-175002 SH.2(H-1)
D-175002 SH.2(J-1)
D-175002 SH.2(F-12) TO HS-J066
D-175002 SH.2(F-13) TO SV3066C & SV3066D
D-175002 SH.2(G-2) TO SV2229B
SV-3028B(A-4)
RISH-0017A(A-7)
NOTES:
1. VALVE IS INSTALLED WITH FLOW TO CLOSE.
2. VALVE MUST REMAIN OPEN WHEN RHR NOT IN USE.
3. THIS VALVE FURNISHED WITH PACKAGE UNIT.
4. FOR P&ID LEGEND SEE DWG. D-175016 SHEETS 1&2.
5. FOR PROCESS FLOW SEE DWG. D-175023
6. LOCATE VALVES IN CCW PUMP ROOM.
7. RELIEF VALVE MUST BE LOCATED AT LEAST 6" ABOVE THE TOP OF THE LOOP SEAL. BOTTOM OF LOOP SEAL MUST EXTEND AT LEAST 6" BELOW THE CONNECTION TO THE MAIN PIPE.
8. FOR COMPLETE INSTRUMENT NUMBERS, REFER TO INSTRUMENT INDEX B-175803.
9. LINE NUMBERS FOR VENT, DRAIN AND INSTRUMENT LINES ON EQUIPMENT, UP TO AND INCLUDING THE ROOT VALVES:
FOR PUMPS-SAME AS PUMP DISCHARGE LINE NUMBER
FOR HEAT EXCHANGERS-SAME AS HEAT EXCHANGER OUTLET LINE NUMBER.
10. FOR PIPING DOWNSTREAM OF VENT AND DRAIN ROOT VALVES, SEE SPEC. SS-1109-2, PAR. 11.5.1 (b).
11. ALL DRAINS ARE PUMPED BY THE PORTABLE COMPONENT COOLING SYSTEM DRAIN PUMP (N1P17P002-N) TO THE SURGE TANK.
12. ALL LINE AND VALVE NUMBERS ARE PREFIXED BY Q1P17 OR N1P17.
13. CCW PUMP MINIMUM FLOW LINE MAY BE ISOLATED PROVIDED THE LINE-UP FOR THE ON-SERVICE, STAND-BY AND OFF-SERVICE TRAINS WILL RESULT IN A CCW PUMP FLOW-RATE GREATER THAN 2100 GPM TO TWO FLOW PATHS.
14. VALVE IS THROTTLED TO 68-75 GPM AND SEALED. S/S PERMISSION NEEDED PRIOR TO CHANGING THE POSITION OF THIS SEAL WIRED VALVE.
CAD D1F50021.DWG
ACAD2002 CYN - 02
Southern Company Services, INC. for
ALABAMA POWER COMPANY
J. M. FARLEY NUCLEAR PLANT - UNIT 1
P&ID- COMPONENT COOLING WATER SYSTEM
NONE
N/A
D-175002
FOR SIGNATURES
SEE MICROFILM
COPY
REVISED PER ABN-F01274, VER. 2.0
02/08/06

Clearance: # :	FOR TRAINING USE ONLY
Tagout: #:	HLT-34 NRC EXAM

Tag		Equipment	Placement					Restoration				
Num	Type	Equipment ID Description/Location	Verif	Seq	Configuration Notes	1st Verif	2nd Verif	Verif	Seq	Configuration Notes	1st Verif	2nd Verif

UNIT 1

PROCEDURE NUMBER: FNP-1-SOP-23.0A VERSION: 10.0 Safety Related

TITLE: COMPONENT COOLING WATER SYSTEM

APPROVED: Jim L. Hunter (for) DATE ISSUED: 08-18-2006

Operations Manager

PROCEDURE USAGE REQUIREMENTS-per FNP-0-AP-6	SECTIONS
Continuous Use	**ALL**
Reference Use	
Information Use	

Situation requiring completion of check list: _____

PERSONS COMPLETING CHECKLIST

NAME (PRINTED)	INITIALS	NAME (PRINTED)	INITIALS	NAME (PRINTED)	INITIALS	NAME (PRINTED)	INITIALS

DATE/TIME 1ST CHECK COMPLETE	DATE / TIME	DATE/TIME VERIFICATION COMPLETE (IF REQUIRED)	DATE / TIME
		SUPERVISOR REVIEW SIGNATURE	DATE / TIME

WARNING: DO NOT USE ANY PAGE WHICH DOES NOT HAVE A VISIBLE BORDERLINE AT THE BOTTOM OF THE PAGE AND COMPLETE READABLE TITLE AT THE TOP OF THE PAGE.

Active Procedure: FNP-1-SOP-23.0A, COMPONENT COOLING WATER SYSTEM

Type: SOP, Unit: 1, Revision: 10

Step: 1.00 — 4160V Bus 1G - U1 AB-N/R-121`- Switchgear Room

Equip Operator Id:	Equip Description:	Equip Location:	Required Config:	Actual Config:	Verification:	Initials	
Q1R15BKRDG04 Notes: 76	COMPONENT COOLING WATER PUMP 1A 52-DG04	4160V BUS 1G - U1-AB-N/R-121`-SWGR RM	RACKED IN		IV		
Q1R15BKRDG05 Notes: 76, 77	COMPONENT COOLING WATER PUMP 1B 52-DG05 (B TRAIN)	4160V BUS 1G - U1-AB-N/R-121`-SWGR RM	RACKED IN		IV		

Step: 1.10 — 4160V Bus 1F - U1 AB-N/R-139`- Switchgear Room

Equip Operator Id:	Equip Description:	Equip Location:	Required Config:	Actual Config:	Verification:	Initials	
Q1R15BKRDF05 Notes: 77	COMPONENT COOLING WATER PUMP 1B 52-DF05 (A TRAIN)	4160V BUS 1F - U1-AB-N/R-139`-SWGR RM	RACKED IN		IV		
Q1R15BKRDF04	COMPONENT COOLING WATER PUMP 1C 52-DF04	4160V BUS 1F - U1-AB-N/R-139`-SWGR RM	RACKED IN		IV		

Step: 1.20 — MCC 1U - U1 AB-RAD-139`- Elec Pen Room

Equip Operator Id:	Equip Description:	Equip Location:	Required Config:	Actual Config:	Verification:	Initials	
Q1R17BKRFUD4	MKUP TO CCW FROM RMW Q1P17MOV3031A	1U MCC - Q1R17B008-A, UNIT 1, 139`RAD ELEC.PENE.ROOM	CLOSED		IV		
Q1R17BKRFUE3	CCW TO 1A RHR HX Q1P17MOV3185A	1U MCC - Q1R17B008-A, UNIT 1, 139`RAD ELEC.PENE.ROOM	CLOSED		IV		
Q1R17BKRFUI3	MKUP TO CCW FROM DW STOR TK Q1P17MOV3030A	1U MCC - Q1R17B008-A, UNIT 1, 139`RAD ELEC.PENE.ROOM	CLOSED		IV		
Q1R17BKRFUS4	CCW TO 1B SFP HX Q1P17MOV3094B	1U MCC - Q1R17B008-A, UNIT 1, 139`RAD ELEC.PENE.ROOM	CLOSED		IV		

Step: 1.30 — MCC 1V - U1 AB-RAD-139`- Elec Pen Room

Equip Operator Id:	Equip Description:	Equip Location:	Required Config:	Actual Config:	Verification:	Initials	
Q1R17BKRFVD2	CCW TO SECONDARY HXS Q1P17MOV3047	1V MCC - Q1R17B009-B,UNIT 1, 139`RAD ELEC.PENE.ROOM	CLOSED		IV		
Q1R17BKRFVD3	CCW TO 1A SFP HX Q1P17MOV3094A	1V MCC - Q1R17B009-B,UNIT 1, 139`RAD ELEC.PENE.ROOM	CLOSED		IV		

Active Procedure: FNP-1-SOP-23.0A, COMPONENT COOLING WATER SYSTEM

Type: SOP, Unit: 1, Revision: 10

Step: 1.30 — MCC 1V - U1 AB-RAD-139`- Elec Pen Room

Equip Operator Id:	Equip Description:	Equip Location:	Required Config:	Actual Config:	Verification:	Initials	
Q1R17BKRFVG4	MKEUP TO CCW FROM DW STOR TK Q1P17MOV3030B	1V MCC - Q1R17B009-B,UNIT 1, 139`RAD ELEC.PENE.ROOM	CLOSED		IV		
Q1R17BKRFVG5	MKUP TO CCW FROM RMW Q1P17MOV3031B	1V MCC - Q1R17B009-B,UNIT 1, 139`RAD ELEC.PENE.ROOM	CLOSED		IV		
Q1R17BKRFVU4	CCW TO 1B RHR HX Q1P17MOV3185B	1V MCC - Q1R17B009-B,UNIT 1, 139`RAD ELEC.PENE.ROOM	CLOSED		IV		

Step: 1.40 — U1-AB-N/R-100`- CCW HX Room

Equip Operator Id:	Equip Description:	Equip Location:	Required Config:	Actual Config:	Verification:	Initials	
Q1R18A0004A Notes: 579	1B CCW PUMP 4 KV DISCONNECT SWITCH 1A	U1 100` NON-RAD RM 185	ALIGNED PER NOTE 579		IV		
Q1R18A0004A-A-HTR1 Notes: 391	DISC SWITCH SPACE HTR BKR	1B CCW PUMP 4KV DISC.SW. Q1R18A0004A-A, IN LOWER COMPT	CLOSED		IV		

Step: 1.50 — U1-AB-N/R-100`- CCW HX Room

Equip Operator Id:	Equip Description:	Equip Location:	Required Config:	Actual Config:	Verification:	Initials	
Q1R18A0004B Notes: 580	CCW PUMP 1B 4KV DISC SW 1B	U1 100` NON-RAD RM 185	ALIGNED PER NOTE 580		IV		
Q1R18A0004B-B-HTR1 Notes: 392	DISC SWITCH SPACE HTR BKR	1B CCW PUMP 4KV DISC.SW. Q1R18A0004B-B, IN LOWER COMPT	CLOSED		IV		

Step: 1.60 — Aux Bldg 83` - Floor Drain Tank Room

Equip Operator Id:	Equip Description:	Equip Location:	Required Config:	Actual Config:	Verification:	Initials	
N1P17V162	CCW REL HDR DRN	AUX BLDG 83` - FLOOR DRAIN TANK RM	CLOSED & CAPPED		IV		

Active Procedure: FNP-1-SOP-23.0A, COMPONENT COOLING WATER SYSTEM

Type: SOP, Unit: 1, Revision: 10

Step: 1.70 — Aux Bldg 83` - 1B RHR Pump Room

Equip Operator Id:	Equip Description:	Equip Location:	Required Config:	Actual Config:	Verification:	Initials	
Q1P17V236A	1B RHR PUMP SEAL HX CCW OUTLET FIS-3062B ROOT	AUX BLDG 83` - 1B RHR PUMP RM	OPEN		IV		
Q1P17V236B	1B RHR PUMP SEAL HX CCW OUTLET FIS-3062B ROOT	AUX BLDG 83` - 1B RHR PUMP RM	OPEN		IV		
Q1P17V256	1B RHR PUMP SEAL HX CCW OUTLET VT	AUX BLDG 83` - 1B RHR PUMP RM	CLOSED & CAPPED		IV		
Q1P17V915B	1B RHR PUMP SEAL COOLER CCW INLET DRN	AUX BLDG 83` - 1B RHR PUMP RM	CLOSED & CAPPED		IV		
Q1P17V916B	1B RHR PUMP SEAL COOLER CCW OUTLET DRN	AUX BLDG 83` - 1B RHR PUMP RM	CLOSED & CAPPED		IV		
Q1P17V917B	1B RHR PUMP SEAL COOLER CCW INLET VENT	AUX BLDG 83` - 1B RHR PUMP RM	CLOSED & CAPPED		IV		
Q1P17V918B	1B RHR PUMP SEAL COOLER CCW OUTLET VENT	AUX BLDG 83` - 1B RHR PUMP RM	CLOSED & CAPPED		IV		

Step: 1.80 — Aux Bldg 83` - 1A RHR Pump Room

Equip Operator Id:	Equip Description:	Equip Location:	Required Config:	Actual Config:	Verification:	Initials	
Q1P17V235A	1A RHR PUMP SEAL HX CCW OUTLET FIS-3062A ROOT	AUX BLDG 83` - 1A RHR PUMP RM	OPEN		IV		
Q1P17V235B	1A RHR PUMP SEAL HX CCW OUTLET FIS-3062A ROOT	AUX BLDG 83` - 1A RHR PUMP RM	OPEN		IV		
Q1P17V915A	1A RHR PUMP SEAL COOLER CCW INLET DRN	AUX BLDG 83` - 1A RHR PUMP RM	CLOSED & CAPPED		IV		
Q1P17V916A	1A RHR PUMP SEAL COOLER CCW OUTLET DRN	AUX BLDG 83` - 1A RHR PUMP RM	CLOSED & CAPPED		IV		

Step: 1.90 — Aux Bldg 83` - Corridor Outside RHR HX Room

/201

Equip Operator Id:	Equip Description:	Equip Location:	Required Config:	Actual Config:	Verification:	Initials	
Q1P17V190	1B RHR HX CCW OUTLET DRN	AUX BLDG 83` - CORRIDOR OUTSIDE RHR HX RM	CLOSED & CAPPED		IV		
Q1P17V237A	1B RHR HX CCW OUTLET Q1P17FISH3445B ROOT	AUX BLDG 83` - CORRIDOR OUTSIDE RHR HX RM	OPEN		IV		
Q1P17V237B	1B RHR HX CCW OUTLET Q1P17FISH3445B ROOT	AUX BLDG 83` - CORRIDOR OUTSIDE RHR HX RM	OPEN		IV		

Active Procedure: FNP-1-SOP-23.0A, COMPONENT COOLING WATER SYSTEM

Type: SOP, Unit: 1, Revision: 10

Step: 1.90 — Aux Bldg 83` - Corridor Outside RHR HX Room

Equip Operator Id:	Equip Description:	Equip Location:	Required Config:	Actual Config:	Verification:	Initials	
Q1P17V026B Notes: 275	1B RHR PUMP SEAL HX CCW OUTLET ISO	AUX BLDG 83` - CORRIDOR OUTSIDE RHR HX RM	OPEN & SEALED		IV		
Q1P17V025B	1B RHR PUMP SEAL HX CCW PRESS REG INLET ISO	AUX BLDG 83` - CORRIDOR OUTSIDE RHR HX RM	OPEN		IV		
Q1P17PCV3404B-AIR SUPPLY	1B RHR PUMP SEAL HX CCW PRESS REG	AUX BLDG 83` - CORRIDOR OUTSIDE RHR HX RM	AIR CUT IN		IV		
Q1P17V280B	PRESS REG Q1P17PCV3404B CONT SUPP ISO	AUX BLDG 83` - CORRIDOR OUTSIDE RHR HX RM	OPEN		IV		
Q1P17V151B	1B RHR PUMP SEAL HX CCW PRESS REG OUTLET ISO	AUX BLDG 83` - CORRIDOR OUTSIDE RHR HX RM	OPEN		IV		
Q1P17V184	1B RHR PUMP SEAL HX CCW INLET LINE DRN	AUX BLDG 83` - CORRIDOR OUTSIDE RHR HX RM	CLOSED & CAPPED		IV		
Q1P17V152B	1B RHR PUMP SEAL HX CCW PRESS REG BYP	AUX BLDG 83` - CORRIDOR OUTSIDE RHR HX RM	CLOSED		IV		

Step: 2.00 — Aux Bldg 83` - RHR Hx Room

Equip Operator Id:	Equip Description:	Equip Location:	Required Config:	Actual Config:	Verification:	Initials	
Q1P17V026A Notes: 275	1A RHR PUMP SEAL HX CCW OUTLET ISO	AUX BLDG 83` - RHR HX RM	OPEN & SEALED		IV		
Q1P17V029A Notes: 345	CCW TO 1A RHR HX (Q1P17MOV3185A)	AUX BLDG 83` - RHR HX RM	CLOSED		IV		
Q1P17V188	1A RHR PUMP SEAL HX CCW OUTLET VT	AUX BLDG 83` - RHR HX RM	CLOSED & CAPPED		IV		
Q1P17V124B	1B RHR HX CCW INLET DRN	AUX BLDG 83` - RHR HX RM	CLOSED & CAPPED		IV		
Q1P17V230B	1B RHR HX CCW INLET PI-3057B ROOT	AUX BLDG 83` - RHR HX RM	OPEN		IV		
Q1P17V125B	1B RHR HX CCW VT	AUX BLDG 83` - RHR HX RM	CLOSED & CAPPED		IV		

Active Procedure: FNP-1-SOP-23.0A, COMPONENT COOLING WATER SYSTEM

Type: SOP, Unit: 1, Revision: 10

Step: 2.00 Aux Bldg 83` - RHR Hx Room

Equip Operator Id:	Equip Description:	Equip Location:	Required Config:	Actual Config:	Verification:	Initials	
Q1P17V231B	1B RHR HX CCW OUTLET PI-3060B ROOT	AUX BLDG 83` - RHR HX RM	OPEN		IV		
Q1P17V028B Notes: 275	1B RHR HX CCW OUTLET ISO	AUX BLDG 83` - RHR HX RM	OPEN & SEALED		IV		
Q1P17V029B Notes: 345	CCW TO 1B RHR HX (Q1P17MOV3185B)	AUX BLDG 83` - RHR HX RM	CLOSED		IV		
Q1P17V185	1B RHR HX CCW OUTLET VT	AUX BLDG 83` - RHR HX RM	CLOSED & CAPPED		IV		
Q1P17V124A	1A RHR HX CCW INLET DRN	AUX BLDG 83` - RHR HX RM	CLOSED & CAPPED		IV		
Q1P17V230A	1A RHR HX CCW INLET PI-3057A ROOT	AUX BLDG 83` - RHR HX RM	OPEN		IV		
Q1P17V125A	1A RHR HX CCW VT	AUX BLDG 83` - RHR HX RM	CLOSED & CAPPED		IV		
Q1P17V231A	1A RHR HX CCW OUTLET PI-3060A ROOT	AUX BLDG 83` - RHR HX RM	OPEN		IV		
Q1P17V028A Notes: 275	1A RHR HX CCW OUTLET ISO	AUX BLDG 83` - RHR HX RM	OPEN & SEALED		IV		
Q1P17PCV3404A-AIR SUPPLY	1A RHR PUMP SEAL HX CCW PRESS REG	AUX BLDG 83` - RHR HX RM	AIR CUT IN		IV		
Q1P17V280A	PRESS REG 3404A CONT SUPP ISO	AUX BLDG 83` - RHR HX RM	OPEN		IV		
Q1P17V151A 11:5	1A RHR PUMP SEAL HX PRESS REG OUTLET ISO	AUX BLDG 83` - RHR HX RM	OPEN		IV		
Q1P17V189	1A RHR PUMP SEAL HX CCW INLET LINE DRN	AUX BLDG 83` - RHR HX RM	CLOSED & CAPPED		IV		
Q1P17V152A	1A RHR PUMP SEAL HX CCW PRESS REG BYP	AUX BLDG 83` - RHR HX RM	CLOSED		IV		
Q1P17V025A	1A RHR PUMP SEAL HX CCW PRESS REG INLET	AUX BLDG 83` - RHR HX RM	OPEN		IV		
Q1P17V238A	1A RHR HX CCW OUTLET Q1P17FISH3445A ROOT	AUX BLDG 83` - RHR HX RM	OPEN		IV		
Q1P17V238B	1A RHR HX CCW OUTLET Q1P17FISH3445A ROOT	AUX BLDG 83` - RHR HX RM	OPEN		IV		

Active Procedure: FNP-1-SOP-23.0A, COMPONENT COOLING WATER SYSTEM

Type: SOP, Unit: 1, Revision: 10

Step: 2.10 — Aux Bldg 100` - Liquid Waste Panel Area

Equip Operator Id:	Equip Description:	Equip Location:	Required Config:	Actual Config:	Verification:	Initials	
Q1P17V182	CHG PUMPS & 1B SFP HX CCW RTN LINE VT	AUX BLDG 100` - LIQUID WASTE PANEL AREA	CLOSED & CAPPED		IV		
Q1P17V261	CHG PUMPS & 1B SFP HX CCW RTN LINE DRN	AUX BLDG 100` - LIQUID WASTE PANEL AREA	CLOSED & CAPPED		IV		
Q1P17V187	CHG PUMPS & 1B SFP HX CCW SUPP LINE VT	AUX BLDG 100` - LIQUID WASTE PANEL AREA	CLOSED & CAPPED		IV		
Q1P17V262	CHG PUMPS & 1B SFP HX CCW SUPP LINE DRN	AUX BLDG 100` - LIQUID WASTE PANEL AREA	CLOSED & CAPPED		IV		

Step: 2.20 — Aux Bldg 100` - Chemical Drain Tank Room

Equip Operator Id:	Equip Description:	Equip Location:	Required Config:	Actual Config:	Verification:	Initials	
Q1P17V183	SEC HXS CCW SUPP LINE VT	AUX BLDG 100` - CHEMICAL DRAIN TANK RM	CLOSED & CAPPED		IV		
Q1P17V265	SEC HXS CCW RTN LINE VT	AUX BLDG 100` - CHEMICAL DRAIN TANK RM	CLOSED & CAPPED		IV		

Step: 2.30 — Aux Bldg 100` - Corridor

Equip Operator Id:	Equip Description:	Equip Location:	Required Config:	Actual Config:	Verification:	Initials	
Q1P17HV2229-AIR SUPPLY	CCW SUPP TO SAMPLE CLRS	AUX BLDG 100` - CORRIDOR	AIR CUT IN		IV		
Q1P17HV2229-JACK	CCW SUPP TO SAMPLE CLRS (HAND JACK)	AUX BLDG 100` - CORRIDOR	FULL OUT		IV		
Q1P17HV2229	CCW SUPP TO SAMPLE CLRS	AUX BLDG 100` - CORRIDOR	OPEN		IV		
Q1P17V286	INLET ISO FOR HV-2229 CCW TO SAMPLE CLRS	AUX BLDG 100` - CORRIDOR	OPEN		IV		
N1P17V202	CCW SUPP TO SAMPLE CLR DRN	AUX BLDG 100` - CORRIDOR	CLOSED & CAPPED		IV		
Q1P17V287 Notes: 275, 289	CCW RTN FROM SAMPLE CLRS	AUX BLDG 100` - CORRIDOR	65-75 GPM & SEALED		IV		
N1P17V201	CCW RTN FROM SAMPLE CLRS DRN	AUX BLDG 100` - CORRIDOR	CLOSED & CAPPED		IV		
Q1P17V031 11:5	LTDN HX CCW INLET ISO	AUX BLDG 100` - CORRIDOR	OPEN		IV		Page

Active Procedure: FNP-1-SOP-23.0A, COMPONENT COOLING WATER SYSTEM

Type: SOP, Unit: 1, Revision: 10

Step: 2.30 Aux Bldg 100` - Corridor

Equip Operator Id:	Equip Description:	Equip Location:	Required Config:	Actual Config:	Verification:	Initials	
Q1P17V260	SEAL WTR HX CCW INLET DRN	AUX BLDG 100` - CORRIDOR	CLOSED & CAPPED		IV		
Q1P17V034	SEAL WTR HX CCW INLET ISO	AUX BLDG 100` - CORRIDOR	OPEN		IV		
Q1P17V253A	LTDN HX CCW OUTLET FI-3074 ROOT	AUX BLDG 100` - CORRIDOR	OPEN		IV		
Q1P17V253B	LTDN HX CCW OUTLET FI-3074 ROOT	AUX BLDG 100` - CORRIDOR	OPEN		IV		
Q1P17V033A	LTDN HX CCW INLET TEMP CONT ISO	AUX BLDG 100` - CORRIDOR	OPEN		IV		
Q1P17TV3083-AIR SUPPLY	LTDN HX CCW TEMP CONT	AUX BLDG 100` - CORRIDOR	AIR CUT IN		IV		
Q1P17TV3083-JACK	LTDN HX CCW TEMP CONT (HAND JACK DEVICE)	AUX BLDG 100` - CORRIDOR	NEUTRAL POSITION & SEALED		IV		
Q1P17V033B Notes: 275	LTDN HX CCW OUTLET TEMP CONT ISO	AUX BLDG 100` - CORRIDOR	OPEN & SEALED		IV		
Q1P17V123 Notes: 9	LTDN HX CCW TEMP CONT BYP	AUX BLDG 100` - CORRIDOR	CLOSED		IV		
Q1P17V252A	SEAL WTR HX CCW OUTLET FI-3077 ROOT	AUX BLDG 100` - CORRIDOR	OPEN		IV		
Q1P17V252B	SEAL WTR HX CCW OUTLET FI-3077 ROOT	AUX BLDG 100` - CORRIDOR	OPEN		IV		
Q1P17V036 Notes: 275 11:5	SEAL WTR HX CCW OUTLET ISO	AUX BLDG 100` - CORRIDOR	2 3/4 TURNS OPEN & SEALED		IV		Page
Q1P17V037	SEAL WTR HX CCW OUTLET ISO	AUX BLDG 100` - CORRIDOR	OPEN		IV		
Q1P17V254	LTDN HX CCW TEMP CONT BYP DRN	AUX BLDG 100` - CORRIDOR	CLOSED & CAPPED		IV		
Q1P17HV3096B	CCW TO EVAP PKGS & H2 RECOMB	U1 100` RAD-SIDE, OVERHEAD, OUTSIDE DOOR TO CHG PUMP HALLWAY	OPEN		IV		
Q1P17HV3096B-AIR SUPPLY	CCW TO EVAP PKGS & H2 RECOMB	AUX BLDG 100` - CORRIDOR	AIR CUT IN		IV		

Active Procedure: FNP-1-SOP-23.0A, COMPONENT COOLING WATER SYSTEM

Type: SOP, Unit: 1, Revision: 10

Step: 2.30 — Aux Bldg 100` - Corridor

Equip Operator Id:	Equip Description:	Equip Location:	Required Config:	Actual Config:	Verification:	Initials	
Q1P17HV3096B-JACK	CCW TO EVAP PKGS & H2 RECOMB (MANUAL JACKING DEVICE)	U1 100` RAD-SIDE, OVERHEAD, OUTSIDE DOOR TO CHG PUMP HALLWAY	COLLAR DISENGAGED AND LOCKSCREW TIGHT		IV		
Q1P17HV3096A	CCW FROM EVAP PKGS & H2 RECOMB	AUX BLDG 100` - CORRIDOR	OPEN		IV		
Q1P17HV3096A-AIR SUPPLY	CCW FROM EVAP PKGS & H2 RECOMB	AUX BLDG 100` - CORRIDOR	AIR CUT IN		IV		
Q1P17HV3096A-JACK	CCW FROM EVAP PKGS & H2 RECOMB (MANUAL JACKING DEVICE)	AUX BLDG 100` - CORRIDOR	COLLAR DISENGAGED AND LOCKSCREW TIGHT		IV		

Step: 2.35 — Aux Bldg 100` - Letdown Hx Room

Equip Operator Id:	Equip Description:	Equip Location:	Required Config:	Actual Config:	Verification:	Initials	
Q1P17V133	LTDN HX CCW INLET LINE DRN	AUX BLDG 100` - LETDOWN HX RM	CLOSED		IV		
Q1P17V134	LTDN HX CCW OUTLET VT	AUX BLDG 100` - LETDOWN HX RM	CLOSED & CAPPED		IV		

Step: 2.40 — Aux Bldg 100` - Seal Water Hx Room

Equip Operator Id:	Equip Description:	Equip Location:	Required Config:	Actual Config:	Verification:	Initials	
Q1P17V131	SEAL WTR HX CCW DRN	AUX BLDG 100` - SEAL WATER HX RM	CLOSED & CAPPED		IV		
Q1P17V132	SEAL WTR HX CCW OUTLET VT	AUX BLDG 100` - SEAL WATER HX RM	CLOSED & CAPPED		IV		

Step: 2.50 — Aux Bldg 100` - Charging Pump Hallway

Equip Operator Id:	Equip Description:	Equip Location:	Required Config:	Actual Config:	Verification:	Initials	
Q1P17V192	CHG PUMP CCW DRN	AUX BLDG 100` - CHARGING PUMP HALLWAY	CLOSED & CAPPED		IV		
Q1P17V137C	CHG PUMP CCW HDR DRN	AUX BLDG 100` - CHARGING PUMP HALLWAY	CLOSED & CAPPED		IV		
Q1P17V022C	CHG PUMP CCW HDR DRN	AUX BLDG 100` - CHARGING PUMP HALLWAY	CLOSED & CAPPED		IV		
Q1P17V024D	CHG PUMPS CCW DRN	AUX BLDG 100` - CHARGING PUMP HALLWAY	CLOSED & CAPPED		IV		

Active Procedure: FNP-1-SOP-23.0A, COMPONENT COOLING WATER SYSTEM

Type: SOP, Unit: 1, Revision: 10

Step: 2.50 — Aux Bldg 100` - Charging Pump Hallway

Equip Operator Id:	Equip Description:	Equip Location:	Required Config:	Actual Config:	Verification:	Initials	
Q1P17V023D	CHG PUMPS CCW DRN	AUX BLDG 100` - CHARGING PUMP HALLWAY	CLOSED & CAPPED		IV		
Q1P17V137A	CHG PUMPS CCW DRN	AUX BLDG 100` - CHARGING PUMP HALLWAY	CLOSED & CAPPED		IV		
Q1P17V023A	CHG PUMPS CCW DRN	AUX BLDG 100` - CHARGING PUMP HALLWAY	CLOSED & CAPPED		IV		
Q1P17V024A	CHG PUMPS CCW DRN	AUX BLDG 100` - CHARGING PUMP HALLWAY BY DOOR 162	CLOSED & CAPPED		IV		
Q1P17V186	1A CHG PUMP CCW INLET DRN	AUX BLDG 100` - CHARGING PUMP HALLWAY	CLOSED & CAPPED		IV		
Q1P17V022A	CHG PUMPS CCW DRN	AUX BLDG 100` - CHARGING PUMP HALLWAY BY DOOR 162	CLOSED & CAPPED		IV		

Step: 2.55 — Aux Bldg 100` - Contaminated Storage Room 172

Equip Operator Id:	Equip Description:	Equip Location:	Required Config:	Actual Config:	Verification:	Initials	
Q1P17V191	CHG PUMP CCW DRN	AUX BLDG 100` - CONTAMINATED STORAGE ROOM 182	CLOSED & CAPPED		IV		

Step: 2.60 — Aux Bldg 121` - Piping Penetration Room

Equip Operator Id:	Equip Description:	Equip Location:	Required Config:	Actual Config:	Verification:	Initials	
Q1P17V167	RCP`S CCW SUPP TEST CONN (PENE 42)	121` PIPING PENETRATION RM	CLOSED & CAPPED		IV		
Q1P17V165	RCP`S OIL CLR CCW RTN LINE VT (PENE 44)	AUX BLDG 121` - PIPING PENETRATION RM	CLOSED & CAPPED		IV		
Q1P17V249A	RCP`S OIL CLR CCW FI-3044 ROOT	AUX BLDG 121` - PIPING PENETRATION RM	OPEN		IV		
Q1P17V249B	RCP`S OIL CLR CCW FI-3044 ROOT	AUX BLDG 121` - PIPING PENETRATION RM	OPEN		IV		
Q1P17V101	RCP`S OIL CLR CCW RTN ISO	AUX BLDG 121` - PIPING PENETRATION RM	OPEN		IV		

Active Procedure: FNP-1-SOP-23.0A, COMPONENT COOLING WATER SYSTEM

Type: SOP, Unit: 1, Revision: 10

Step: 2.60 Aux Bldg 121` - Piping Penetration Room

Equip Operator Id:	Equip Description:	Equip Location:	Required Config:	Actual Config:	Verification:	Initials	
Q1P17V107 Notes: 9	RCP`S THRM BARR CCW RTN ISO (PENE 43)	AUX BLDG 121` - PIPING PENETRATION RM	OPEN		IV		
Q1P17V250A	RCP`S THRM BARR CCW FI-3045 ROOT	AUX BLDG 121` - PIPING PENETRATION RM	OPEN		IV		
Q1P17V250B	RCP`S THRM BARR CCW FI-3045 ROOT	AUX BLDG 121` - PIPING PENETRATION RM	OPEN		IV		
Q1P17V173	RCP`S THRM BARR CCW RTN TEST CONN	AUX BLDG 121` - PIPING PENETRATION RM	CLOSED & CAPPED		IV		
Q1P17V081	EXC LTDN & RCDT HX`S CCW RTN ISO (PENE 46)	AUX BLDG 121` - PIPING PENETRATION RM	OPEN		IV		
Q1P17HV3067-AIR SUPPLY	CCW FROM EXC LTDN/RCDT HX`S	AUX BLDG 121` - PIPING PENETRATION RM	AIR CUT IN		IV		
Q1P17HV3067	CCW FROM EXC LTDN/RCDT HX`S	AUX BLDG 121` - PIPING PENETRATION RM	OPEN		IV		
Q1P17HV3067-JACK Notes: 275	CCW FROM EXC LTDN/RCDT HX`S (HAND JACK DEVICE)	AUX BLDG 121` - PIPING PENETRATION RM	NEUTRAL POSITION & SEALED		IV		
Q1P17HV3095-AIR SUPPLY	CCW TO EXC LTDN/RCDT HX`S	AUX BLDG 121` - PIPING PENETRATION RM	AIR CUT IN		IV		
Q1P17HV3095	CCW TO EXC LTDN/RCDT HX`S (PENE 45)	AUX BLDG 121` - PIPING PENETRATION RM	OPEN		IV		
Q1P17HV3095-JACK Notes: 275	CCW TO EXC LTDN/RCDT HX`S (HAND JACK DEVICE)	AUX BLDG 121` - PIPING PENETRATION RM	NEUTRAL POSITION & SEALED		IV		
Q1P17V160	EXC LTDN & RCDT HX`S CCW RTN LINE TEST CONN	AUX BLDG 121` - PIPING PENETRATION RM	CLOSED, CAPPED & SEALED		IV		
Q1P17V166	EXC LTDN & RCDT HX`S CCW SUPP LINE TEST CONN	AUX BLDG 121` - PIPING PENETRATION RM	CLOSED, CAPPED & SEALED		IV		
Q1P17V164	CCW DISCH RCP OIL CLR TEST CONN	121` PIPING PENETRATION RM	CLOSED, CAPPED & SEALED		IV		
Q1P17V168	RCPS CCW SUPP TEST CONN	121` PIPING PENETRATION RM	CLOSED, CAPPED & SEALED		IV		
Q1P17V161	CCW DISCH EXC LTDN & RCDT HX`S DRN	AUX BLDG 121` - PIPING PENETRATION RM	CLOSED & CAPPED		IV		
Q1P17V251A	EXC LTDN & RCDT HX`S CCW FI-3066 ROOT	AUX BLDG 121` - PIPING PENETRATION RM	OPEN		IV		

Active Procedure: FNP-1-SOP-23.0A, COMPONENT COOLING WATER SYSTEM

Type: SOP, Unit: 1, Revision: 10

Step: 2.60 — Aux Bldg 121` - Piping Penetration Room

Equip Operator Id:	Equip Description:	Equip Location:	Required Config:	Actual Config:	Verification:	Initials	
Q1P17V251B	EXC LTDN & RCDT HX`S CCW FI-3066 ROOT	AUX BLDG 121` - PIPING PENETRATION RM	OPEN		IV		

Step: 2.70 — Aux Bldg 139` - Chemistry Lab (above false ceiling)

Equip Operator Id:	Equip Description:	Equip Location:	Required Config:	Actual Config:	Verification:	Initials	
N1P17V172A	SAMPLE HX CCW FI-3036 ROOT	AUX BLDG 139` - CHEMISTRY LAB (ABOVE FALSE CEILING)	OPEN		IV		
N1P17V172B	SAMPLE HX CCW FI-3036 ROOT	AUX BLDG 139` - CHEMISTRY LAB (ABOVE FALSE CEILING)	OPEN		IV		

Step: 2.80 — Aux Bldg 139` - Control Panel Outside PRF Room

Equip Operator Id:	Equip Description:	Equip Location:	Required Config:	Actual Config:	Verification:	Initials	
Q1P17HV2229-VLV H/S	CCW SUPP TO SAMPLE CLRS	AUX BLDG 139` - CONTROL PANEL OUTSIDE PRF RM	AUTO		IV		
Q1P17HV2229-VLV IND	CCW SUPP TO SAMPLE CLRS	AUX BLDG 139` - CONTROL PANEL OUTSIDE PRF RM	OPEN		IV		
Q1P17HV2229-NORM/BLOCK SW	CCW SUPP TO SAMPLE CLRS (KEY SWITCH)	AUX BLDG 139` - CONTROL PANEL OUTSIDE PRF RM	NORMAL		IV		

Step: 2.90 — Aux Bldg 121` - Waste Evaporator Package Room

Equip Operator Id:	Equip Description:	Equip Location:	Required Config:	Actual Config:	Verification:	Initials	
N1P17V161	TEST CONN	AUX BLDG 121` - WASTE EVAPORATOR PKG RM	CLOSED & CAPPED		IV		
N1P17V063 11:5	TEST CONN	AUX BLDG 121` - WASTE EVAPORATOR PKG RM	CLOSED & CAPPED		IV		Page

Step: 3.00 — Aux Bldg 155` - 1A SFP HX Room

Equip Operator Id:	Equip Description:	Equip Location:	Required Config:	Actual Config:	Verification:	Initials	
Q1P17V014A	1A SFP HX CCW DRN	AUX BLDG 155` - 1A SFP HX RM	CLOSED		IV		
Q1P17V015A	1A SFP HX OUTLET LINE VT	AUX BLDG 155` - 1A SFP HX RM	CLOSED & CAPPED		IV		
Q1P17V228A	1A SFP HX CCW FI-3080A ROOT	AUX BLDG 155` - 1A SFP HX RM	OPEN		IV		

Active Procedure: FNP-1-SOP-23.0A, COMPONENT COOLING WATER SYSTEM

Type: SOP, Unit: 1, Revision: 10

Step: 3.00 Aux Bldg 155` - 1A SFP HX Room

Equip Operator Id:	Equip Description:	Equip Location:	Required Config:	Actual Config:	Verification:	Initials	
Q1P17V228B	1A SFP HX CCW FI-3080A ROOT	AUX BLDG 155` - 1A SFP HX RM	OPEN		IV		
Q1P17V016A Notes: 275	1A SFP HX CCW OUTLET ISO	AUX BLDG 155` - 1A SFP HX RM	14-35 DEG OPEN & SEALED		IV		
Q1P17V011A	CCW TO 1A SFP HX (Q1P17MOV3094A)	AUX BLDG 155` - 1A SFP HX RM	OPEN		IV		

Step: 3.10 Aux Bldg 175` - 1B SFP HX Room

Equip Operator Id:	Equip Description:	Equip Location:	Required Config:	Actual Config:	Verification:	Initials	
Q1P17V015B	1B SFP HX CCW OUTLET LINE VT	AUX BLDG 175` - 1B SFP HX RM	CLOSED & CAPPED		IV		
Q1P17V229A	1B SFP HX CCW FI-3080B ROOT	AUX BLDG 175` - 1B SFP HX RM	OPEN		IV		
Q1P17V229B	1B SFP HX CCW FI-3080B ROOT	AUX BLDG 175` - 1B SFP HX RM	OPEN		IV		

Step: 3.20 Aux Bldg 155` - Corridor Drumming Area

Equip Operator Id:	Equip Description:	Equip Location:	Required Config:	Actual Config:	Verification:	Initials	
Q1P17V014B	1B SFP HX CCW DRN	AUX BLDG 155` - CORRIDOR DRUMMING AREA	CLOSED & CAPPED		IV		
Q1P17V016B Notes: 275	1B SFP HX CCW OUTLET ISO	AUX BLDG 155` - CORRIDOR DRUMMING AREA	14-35 DEG OPEN & SEALED		IV		
Q1P17V011B	CCW TO 1B SFP HX (Q1P17MOV3094B)	AUX BLDG 155` - CORRIDOR DRUMMING AREA	OPEN		IV		

Step: 3.30 CTMT 129` - North Wall

Equip Operator Id:	Equip Description:	Equip Location:	Required Config:	Actual Config:	Verification:	Initials	
Q1P17V162	CCW SUPP LINE TO EXC LTDN/RCDT HXS TEST CONN	CTMT 129` - PENETRATIONS 45 AND 46	CLOSED & CAPPED		IV		
Q1P17HV3443-AIR SUPPLY	CCW FROM EXC LTDN/RCDT HXS	CTMT 129` - PENETRATIONS 45 AND 46	AIR CUT IN		IV		

Active Procedure: FNP-1-SOP-23.0A, COMPONENT COOLING WATER SYSTEM

Type: SOP, Unit: 1, Revision: 10

Step: 3.30 — CTMT 129` - North Wall

Equip Operator Id:	Equip Description:	Equip Location:	Required Config:	Actual Config:	Verification:	Initials	
Q1P17HV3443	CCW FROM EXC LTDN/RCDT HXS	CTMT 129` - PENETRATIONS 45 AND 46	OPEN		IV		
Q1P17HV3443-JACK	CCW FROM EXC LTDN/RCDT HXS (HAND JACK DEVICE)	CTMT 129` - PENETRATIONS 45 AND 46	NEUTRAL POSITION		IV		

Step: 3.40 — CTMT 105`

Equip Operator Id:	Equip Description:	Equip Location:	Required Config:	Actual Config:	Verification:	Initials	
Q1P17V079	RCDT HX CCW INLET ISO	CTMT 105`	OPEN		IV		
Q1P17V080 Notes: 275	RCDT HX CCW OUTLET ISO	CTMT 105`	4 1/8 TURNS OPEN & SEALED		IV		
Q1P17V130	RCDT HX CCW INLET LINE DRN	CTMT 105`	CLOSED & CAPPED		IV		
Q1P17V257	RCDT HX CCW DRN	CTMT 105`	CLOSED & CAPPED		IV		
Q1P17V129	RCDT HX CCW VT	CTMT 105`	CLOSED & CAPPED		IV		
Q1P17V174	RCDT HX CCW OUTLET LINE TEST CONN	CTMT 129' NEAR PENE 25	CLOSED & CAPPED		IV		

Step: 3.50 — Aux Bldg 100` - CCW Hx Room

Equip Operator Id:	Equip Description:	Equip Location:	Required Config:	Actual Config:	Verification:	Initials	
Q1P17V221A	1A CCW PUMP SUCT PI-3308A ROOT	AUX BLDG 100` - CCW HX RM	OPEN		IV		
Q1P17V109A	1A CCW PUMP SUCT	AUX BLDG 100` - CCW HX RM	OPEN		IV		
Q1P17V279A 11:5	1A CCW PUMP SUCT LINE VT	AUX BLDG 100` - CCW HX RM	CLOSED & CAPPED		IV		
Q1P17V156A	1A CCW PUMP VT	AUX BLDG 100` - CCW HX RM	CLOSED & CAPPED		IV		
Q1P17V156D	1A CCW PUMP VT	AUX BLDG 100` - CCW HX RM	CLOSED & CAPPED		IV		
Q1P17V157A	1A CCW PUMP DRN	AUX BLDG 100` - CCW HX RM	CLOSED & CAPPED		IV		
Q1P17V157B	1A CCW PUMP DRN	AUX BLDG 100` - CCW HX RM	CLOSED & CAPPED		IV		

Active Procedure: FNP-1-SOP-23.0A, COMPONENT COOLING WATER SYSTEM

Type: SOP, Unit: 1, Revision: 10

Step: 3.50 Aux Bldg 100` - CCW Hx Room

Equip Operator Id:	Equip Description:	Equip Location:	Required Config:	Actual Config:	Verification:	Initials	
Q1P17V144A	1A CCW PUMP MINI-FLOW	AUX BLDG 100` - CCW HX RM	OPEN		IV		
Q1P17V278A	1A CCW PUMP CHEM MIXING ISO	AUX BLDG 100` - CCW HX RM	CLOSED		IV		
Q1P17V210	1A CCW PUMP MINI-FLOW VT	AUX BLDG 100` - CCW HX RM	CLOSED & CAPPED		IV		
Q1P17V258A	1A CCW PUMP REL HDR DRN	AUX BLDG 100` - CCW HX RM	CLOSED & CAPPED		IV		
Q1P17V222A	1A CCW PUMP DISCH PI-3035A ROOT	AUX BLDG 100` - CCW HX RM	OPEN		IV		
Q1P17V281A	1A CCW PUMP DISCH HDR DRN	AUX BLDG 100` - CCW HX RM	CLOSED & CAPPED		IV		
Q1P17V002A	1A CCW PUMP DISCH ISO	AUX BLDG 100` - CCW HX RM	OPEN		IV		
Q1P17V109B	1B CCW PUMP SUCT	AUX BLDG 100` - CCW HX RM	OPEN		IV		
Q1P17V279B	1B CCW PUMP SUCT LINE VT	AUX BLDG 100` - CCW HX RM	CLOSED & CAPPED		IV		
Q1P17V221B	1B CCW PUMP SUCT PI-3308B ROOT	AUX BLDG 100` - CCW HX RM	OPEN		IV		
Q1P17V156B	1B CCW PUMP VT	AUX BLDG 100` - CCW HX RM	CLOSED & CAPPED		IV		
Q1P17V156E	1B CCW PUMP VT	AUX BLDG 100` - CCW HX RM	CLOSED & CAPPED		IV		
Q1P17V157C	1B CCW PUMP DRN	AUX BLDG 100` - CCW HX RM	CLOSED & CAPPED		IV		
Q1P17V157D	1B CCW PUMP DRN	AUX BLDG 100` - CCW HX RM	CLOSED & CAPPED		IV		
Q1P17V144B	1B CCW PUMP MINI-FLOW	AUX BLDG 100` - CCW HX RM	OPEN		IV		
Q1P17V278B	1B CCW PUMP CHEM MIXING ISO	AUX BLDG 100` - CCW HX RM	CLOSED		IV		
Q1P17V178	1B CCW PUMP MINI-FLOW VT	AUX BLDG 100` - CCW HX RM	CLOSED & CAPPED		IV		
Q1P17V258B 11:5	1B CCW PUMP REL HDR DRN	100 FT UNIT 1 AUX BLDG SOUTH CCW HX RM 185 BY 1B CCW PUMP	CLOSED & CAPPED		IV		age

Active Procedure: FNP-1-SOP-23.0A, COMPONENT COOLING WATER SYSTEM

Type: SOP, Unit: 1, Revision: 10

Step: 3.50 Aux Bldg 100` - CCW Hx Room

Equip Operator Id:	Equip Description:	Equip Location:	Required Config:	Actual Config:	Verification:	Initials	
Q1P17V281B	1B CCW PUMP DISCH HDR DRN	AUX BLDG 100` - CCW HX RM	CLOSED & CAPPED		IV		
Q1P17V222B	1B CCW PUMP DISCH PI-3035B ROOT	AUX BLDG 100` - CCW HX RM	OPEN		IV		
Q1P17V002B	1B CCW PUMP DISCH ISO	AUX BLDG 100` - CCW HX RM	OPEN		IV		
Q1P17V109C	1C CCW PUMP SUCT ISO	AUX BLDG 100` - CCW HX RM	OPEN		IV		
Q1P17V279C	1C CCW PUMP SUCT LINE VT	AUX BLDG 100` - CCW HX RM	CLOSED & CAPPED		IV		
Q1P17V221C	1C CCW PUMP SUCT PI-3308C ROOT	AUX BLDG 100` - CCW HX RM	OPEN		IV		
Q1P17V156C	1C CCW PUMP VT	AUX BLDG 100` - CCW HX RM	CLOSED & CAPPED		IV		
Q1P17V156F	1C CCW PUMP VT	AUX BLDG 100` - CCW HX RM	CLOSED & CAPPED		IV		
Q1P17V157E	1C CCW PUMP DRN	AUX BLDG 100` - CCW HX RM	CLOSED & CAPPED		IV		
Q1P17V157F	1C CCW PUMP DRN	AUX BLDG 100` - CCW HX RM	CLOSED & CAPPED		IV		
Q1P17V144C	1C CCW PUMP MINI-FLOW	AUX BLDG 100` - CCW HX RM	OPEN		IV		
Q1P17V179	1C CCW PUMP MINI-FLOW VT	AUX BLDG 100` - CCW HX RM	CLOSED & CAPPED		IV		
Q1P17V278C	1C CCW PUMP CHEM MIXING ISO	AUX BLDG 100` - CCW HX RM	CLOSED		IV		
Q1P17V258C	1C CCW PUMP REL HDR DRN	AUX BLDG 100` - CCW HX RM	CLOSED & CAPPED		IV		
Q1P17V222C	1C CCW PUMP DISCH PI-3035C ROOT	AUX BLDG 100` - CCW HX RM	OPEN		IV		
Q1P17V002C	1C CCW PUMP DISCH ISO	AUX BLDG 100` - CCW HX RM	OPEN		IV		
Q1P17V110A Notes: 9	CCW FROM 1B RHR HX	AUX BLDG 100` - CCW HX RM	OPEN		IV		
Q1P17V017A	CCW FROM 1A SFP HX AND CHG PUMPS	AUX BLDG 100` - CCW HX RM	OPEN		IV		

Active Procedure: FNP-1-SOP-23.0A, COMPONENT COOLING WATER SYSTEM

Type: SOP, Unit: 1, Revision: 10

Step: 3.50 Aux Bldg 100` - CCW Hx Room

Equip Operator Id:	Equip Description:	Equip Location:	Required Config:	Actual Config:	Verification:	Initials	
Q1P17V110B Notes: 9, 290	CCW PUMPS SUCT HDR XCONN	AUX BLDG 100` - CCW HX RM	CLOSED		IV		
Q1P17V110C Notes: 9, 290	CCW PUMPS SUCT HDR XCONN	AUX BLDG 100` - CCW HX RM	CLOSED		IV		
Q1P17V110D Notes: 9, 290	CCW PUMPS SUCT HDR XCONN	AUX BLDG 100` - CCW HX RM	OPEN		IV		
Q1P17V110E Notes: 9, 290	CCW PUMPS SUCT HDR XCONN	AUX BLDG 100` - CCW HX RM	OPEN		IV		
Q1P17V017B	CCW FROM 1B SFP HX AND CHG PUMPS	AUX BLDG 100` - CCW HX RM	OPEN		IV		
Q1P17V281C	1C CCW PUMP DISCH HDR DRN	AUX BLDG 100` - CCW HX RM	CLOSED & CAPPED		IV		
Q1P17V110F	CCW FROM 1A RHR HX	AUX BLDG 100` - CCW HX RM	OPEN		IV		
Q1P17V004A	CCW INLET TO 1A CCW HX	AUX BLDG 100` - CCW HX RM	OPEN		IV		
Q1P17V003A Notes: 9, 291	CCW PUMPS DISCH HDR XCONN	AUX BLDG 100` - CCW HX RM	CLOSED		IV		
Q1P17V003B Notes: 9, 291	CCW PUMPS DISCH HDR XCONN	AUX BLDG 100` - CCW HX RM	CLOSED		IV		
Q1P17V004B	CCW INLET TO 1B CCW HX	AUX BLDG 100` - CCW HX RM	OPEN		IV		
Q1P17V003C Notes: 9, 291	CCW PUMPS DISCH HDR XCONN	AUX BLDG 100` - CCW HX RM	OPEN		IV		
Q1P17V003D Notes: 9, 291	CCW PUMPS DISCH HDR XCONN	AUX BLDG 100` - CCW HX RM	OPEN		IV		
Q1P17V004C	CCW INLET TO 1C CCW HX	AUX BLDG 100` - CCW HX RM	OPEN		IV		

Active Procedure: FNP-1-SOP-23.0A, COMPONENT COOLING WATER SYSTEM

Type: SOP, Unit: 1, Revision: 10

Step: 3.50 Aux Bldg 100` - CCW Hx Room

Equip Operator Id:	Equip Description:	Equip Location:	Required Config:	Actual Config:	Verification:	Initials	
Q1P17V223A	1A CCW HX CCW INLET FT-3043A ROOT	AUX BLDG 100` - CCW HX RM	OPEN		IV		
Q1P17V223B	1A CCW HX CCW INLET FT-3043A ROOT	AUX BLDG 100` - CCW HX RM	OPEN		IV		
Q1P17V177	1A CCW HX CCW INLET VT	AUX BLDG 100` - CCW HX RM	CLOSED & CAPPED		IV		
Q1P17V226A	1A CCW HX CCW INLET PI-3038A ROOT	AUX BLDG 100` - CCW HX RM	OPEN		IV		
Q1P17V005A	1A CCW HX CCW DRN	AUX BLDG 100` - CCW HX RM	CLOSED & CAPPED		IV		
Q1P17V007A	1A CCW HX CCW VT	AUX BLDG 100` - CCW HX RM	CLOSED & CAPPED		IV		
Q1P17V005B	1A CCW HX CCW DRN	AUX BLDG 100` - CCW HX RM	CLOSED & CAPPED		IV		
Q1P17V227A	1A CCW HX CCW OUTLET PI-3041A ROOT	AUX BLDG 100` - CCW HX RM	OPEN		IV		
Q1P17V008A Notes: 292	1A CCW HX CCW OUTLET ISO	AUX BLDG 100` - CCW HX RM	OPEN		IV		
Q1P17V010A	B TRN CCW SUPP ISO	AUX BLDG 100` - CCW HX RM	OPEN		IV		
Q1P17V009A Notes: 9, 291	CCW SUPP HDR XCONN	AUX BLDG 100` - CCW HX RM	CLOSED		IV		
Q1P17V012A	CCW SUPP TO 1A SFP HX AND CHG PUMPS	AUX BLDG 100` - CCW HX RM	OPEN		IV		
Q1P17V224A	1B CCW HX CCW INLET FT-3043B ROOT	AUX BLDG 100` - CCW HX RM	OPEN		IV		
Q1P17V224B	1B CCW HX CCW INLET FT-3043B ROOT	AUX BLDG 100` - CCW HX RM	OPEN		IV		
Q1P17V180	1B CCW HX CCW INLET VT	AUX BLDG 100` - CCW HX RM	CLOSED & CAPPED		IV		
Q1P17V226B	1B CCW HX CCW INLET PI-3038B ROOT	AUX BLDG 100` - CCW HX RM	OPEN		IV		
Q1P17V005C	1B CCW HX CCW DRN	AUX BLDG 100` - CCW HX RM	CLOSED & CAPPED		IV		

Active Procedure: FNP-1-SOP-23.0A, COMPONENT COOLING WATER SYSTEM

Type: SOP, Unit: 1, Revision: 10

Step: 3.50 Aux Bldg 100` - CCW Hx Room

Equip Operator Id:	Equip Description:	Equip Location:	Required Config:	Actual Config:	Verification:	Initials	
Q1P17V007B	1B CCW HX CCW VT	AUX BLDG 100` - CCW HX RM	CLOSED & CAPPED		IV		
Q1P17V005D	1B CCW HX CCW DRN	AUX BLDG 100` - CCW HX RM	CLOSED & CAPPED		IV		
Q1P17V227B	1B CCW HX CCW OUTLET PI-3041B ROOT	AUX BLDG 100` - CCW HX RM	OPEN		IV		
Q1P17V008B Notes: 293	1B CCW HX CCW OUTLET ISO	AUX BLDG 100` - CCW HX RM	CLOSED		IV		
Q1P17V009B Notes: 9, 291	CCW SUPP HDR XCONN	AUX BLDG 100` - CCW HX RM	CLOSED		IV		
Q1P17V009C Notes: 9, 291	CCW SUPP HDR XCONN	AUX BLDG 100` - CCW HX RM	OPEN		IV		
Q1P17V181	1C CCW HX CCW INLET VT	AUX BLDG 100` - CCW HX RM	CLOSED & CAPPED		IV		
Q1P17V225A	1C CCW HX CCW INLET FI-3043C ROOT	AUX BLDG 100` - CCW HX RM	OPEN		IV		
Q1P17V225B	1C CCW HX CCW INLET FI-3043C ROOT	AUX BLDG 100` - CCW HX RM	OPEN		IV		
Q1P17V226C	1C CCW HX CCW INLET PI-3038C ROOT	AUX BLDG 100` - CCW HX RM	OPEN		IV		
Q1P17V005E	1C CCW HX CCW DRN	AUX BLDG 100` - CCW HX RM	CLOSED & CAPPED		IV		
Q1P17V007C	1C CCW HX CCW VT	AUX BLDG 100` - CCW HX RM	CLOSED & CAPPED		IV		
Q1P17V005F	1C CCW HX CCW DRN	AUX BLDG 100` - CCW HX RM	CLOSED & CAPPED		IV		
Q1P17V227C	1C CCW HX CCW OUTLET PI-3041C ROOT	AUX BLDG 100` - CCW HX RM	OPEN		IV		
Q1P17V008C Notes: 294	1C CCW HX CCW OUTLET ISO	AUX BLDG 100` - CCW HX RM	OPEN		IV		
Q1P17V009D Notes: 9, 291	CCW SUPP HDR XCONN	AUX BLDG 100` - CCW HX RM	OPEN		IV		

Active Procedure: FNP-1-SOP-23.0A, COMPONENT COOLING WATER SYSTEM

Type: SOP, Unit: 1, Revision: 10

Step: 3.50 Aux Bldg 100` - CCW Hx Room

Equip Operator Id:	Equip Description:	Equip Location:	Required Config:	Actual Config:	Verification:	Initials	
Q1P17V010B	A TRN CCW SUPP ISO	AUX BLDG 100` - CCW HX RM	OPEN		IV		
Q1P17V012B	CCW SUPP TO 1B SFP HX AND CHG PUMPS	AUX BLDG 100` - CCW HX RM	OPEN		IV		
Q1P17V116	CCW SRG TK A TRN MKUP ISO	AUX BLDG 100` - CCW HX RM	OPEN		IV		
Q1P17V120	CCW SRG TK B TRN MKUP ISO	AUX BLDG 100` - CCW HX RM	OPEN		IV		
Q1P17V175	CCW SRG TK A TRN MKUP LINE DRN	AUX BLDG 100` - CCW HX RM	CLOSED & CAPPED		IV		
Q1P17V176	CCW SRG TK B TRN MKUP LINE DRN	AUX BLDG 100` - CCW HX RM	CLOSED & CAPPED		IV		
N1P11V045	CCW SRG TK DEMIN INLET ISO	AUX BLDG 100` - CCW HX RM	OPEN		IV		
Q1P17V030	CCW TO SEC HXS (Q1P17MOV3047)	AUX BLDG 100` - CCW HX RM	OPEN		IV		
Q1P17V117A	MKUP TO CCW FROM RMW (Q1P17MOV3031A)	AUX BLDG 100` - CCW HX RM	CLOSED		IV		
Q1P17V121A	MKUP TO CCW FROM DW STOR TK (Q1P17MOV3030A)	AUX BLDG 100` - CCW HX RM	CLOSED		IV		
Q1P17V117B	MKUP TO CCW FROM RMW (Q1P17MOV3031B)	AUX BLDG 100` - CCW HX RM	CLOSED		IV		
Q1P17V121B	MKUP TO CCW FROM DW STOR TK (Q1P17MOV3030B)	AUX BLDG 100` - CCW HX RM	CLOSED		IV		

Step: 3.60 Aux Bldg 175` - CCW Surge Tank Room

Equip Operator Id:	Equip Description:	Equip Location:	Required Config:	Actual Config:	Verification:	Initials	
N1P17V179	CCW SRG TK DW HOSE CONN	AUX BLDG 175` - CCW SURGE TANK RM	CLOSED & CAPPED		IV		
Q1P17V113A	CCW SRG TK A TRN DRN	AUX BLDG 175` - CCW SURGE TANK RM	CLOSED		IV		
Q1P17V113B	CCW SRG TK B TRN DRN	AUX BLDG 175` - CCW SURGE TANK RM	CLOSED & CAPPED		IV		
Q1P17V112A	CCW SRG TK LI-3027B&D ROOT	AUX BLDG 175` - CCW SURGE TANK RM	OPEN		IV		
Q1P17V112B	CCW SRG TK LI-3027B&D ROOT	AUX BLDG 175` - CCW SURGE TANK RM	OPEN		IV		

Active Procedure: FNP-1-SOP-23.0A, COMPONENT COOLING WATER SYSTEM

Type: SOP, Unit: 1, Revision: 10

Step: 3.60 — Aux Bldg 175` - CCW Surge Tank Room

Equip Operator Id:	Equip Description:	Equip Location:	Required Config:	Actual Config:	Verification:	Initials	
Q1P17V112C	CCW SRG TK LI-3027A&C ROOT	AUX BLDG 175` - CCW SURGE TANK RM	OPEN		IV		
Q1P17V112D	CCW SRG TK LI-3027A&C ROOT	AUX BLDG 175` - CCW SURGE TANK RM	OPEN		IV		
Q1P17V114	CCW SRG TK CHEM ADD	AUX BLDG 175` - CCW SURGE TANK RM	CLOSED & CAPPED		IV		
Q1P17RV3028-AIR SUPPLY	CCW SRG TK AIR VT	AUX BLDG 175` - CCW SURGE TANK RM	AIR CUT IN		IV		
Q1P17RV3028	CCW SRG TK AIR VT	AUX BLDG 175` - CCW SURGE TANK RM	OPEN		IV		
Q1P17RV3028-JACK	CCW SRG TK AIR VT (HAND JACK DEVICE)	AUX BLDG 175` - CCW SURGE TANK RM	NEUTRAL POSITION		IV		
Q1P17V285A	CCW SRG TK LI-3027A UPPER ROOT	AUX BLDG 175` - CCW SURGE TANK RM	OPEN		IV		
Q1P17V285B	CCW SRG TK LI-3027B UPPER ROOT	AUX BLDG 175` - CCW SURGE TANK RM	OPEN		IV		
Q1P17V285C	CCW SRG TK LI-3027C UPPER ROOT	AUX BLDG 175` - CCW SURGE TANK RM	OPEN		IV		
Q1P17V285D	CCW SRG TK LI-3027D UPPER ROOT	AUX BLDG 175` - CCW SURGE TANK RM	OPEN		IV		

Step: 3.70 — Main Control Board

Equip Operator Id:	Equip Description:	Equip Location:	Required Config:	Actual Config:	Verification:	Initials	
Q1P17RV3028-MCB H/S	CCW SRG TK VT	MAIN CONTROL BOARD	OPEN		IV		
Q1P17HV3096B&A-MCB H/S	CCW TO/FROM EVAP PKGS & H2 RECOMB Q1P17HV3096B&A	U1 MCB	OPEN / AUTO		IV		
Q1P17MOV3185A-MCB H/S Notes: 345	CCW TO 1A RHR HX Q1P17MOV3185A FU-E3	U1 MCB	CLOSE / MID POS.		IV		
Q1P17MOV3185B-MCB H/S Notes: 345	CCW TO 1B RHR HX Q1P17MOV3185B FV-U4	U1 MCB	CLOSE / MID POS.		IV		
Q1P17MOV3094A-MCB H/S	CCW TO 1A SFP HX Q1P17MOV3094A FV-D3	U1 MCB	OPEN / MID POS.		IV		
Q1P17MOV3094B-MCB H/S	CCW TO 1B SFP HX Q1P17MOV3094B FU-S4	U1 MCB	OPEN / MID POS.		IV		

Active Procedure: FNP-1-SOP-23.0A, COMPONENT COOLING WATER SYSTEM

Type: SOP, Unit: 1, Revision: 10

Step: 3.70 Main Control Board

Equip Operator Id:	Equip Description:	Equip Location:	Required Config:	Actual Config:	Verification:	Initials	
Q1P17MOV3047-MCB H/S	CCW TO SECONDARY HXS Q1P17MOV3047 FV-D2	U1 MCB	OPEN / AUTO		IV		
Q1P17MOV3031A-MCB H/S	MKUP TO CCW FROM RMW Q1P17MOV3031A FU-D4	U1 MCB	CLOSE / MID POS.		IV		
Q1P17MOV3030A-MCB H/S	MKUP TO CCW FROM DW STOR TK Q1P17MOV3030A FU-I3	U1 MCB	CLOSE / MID POS.		IV		
Q1P17MOV3031B-MCB H/S	MKUP TO CCW FROM RMW Q1P17MOV3031B FV-G5	U1 MCB	CLOSE / MID POS.		IV		
Q1P17MOV3030B-MCB H/S	MKUP TO CCW FROM DW STOR TK Q1P17MOV3030B FV-G4	U1 MCB	CLOSE / MID POS.		IV		
Q1P17HV3067-MCB H/S	CCW FROM EXC LTDN/RCDT HXS Q1P17HV3067	U1 MCB	OPEN / AUTO		IV		
Q1P17HV3443-MCB H/S	CCW FROM EXC LTDN/RCDT HXS Q1P17HV3443	U1 MCB	OPEN / AUTO		IV		
Q1P17HV3095-MCB H/S	CCW TO EXC LTDN/RCDT HXS Q1P17HV3095	U1 MCB	OPEN / AUTO		IV		

Note #	Note Text:
9	For outage return to service, coordinate with SS and stroke vlv a minimum of 1 turn. Submit CR for problems.
76	Alternate DC control power located in Hot Shutdown Panel.
77	Only the BKR for the TRN that the pump is aligned to will be racked in. The other BKR will be racked out.
275	Set for CCW flow balance. S/S permission needed prior to changing the position of this seal wired valve.
289	as shown on FI-3036
290	May be in opposite position if 1B CCW pump aligned to B train.
291	May be in opposite position if miscellaneous header on B train.
292	May be in opposite position if 1B CCW Hx on service and aligned to B Train.
293	May be in opposite position if 1B CCW Hx on service and aligned to either A Train or B Train.
294	May be in opposite position if 1B CCW Hx on service and aligned to A Train.
345	May be open if RHR system on service or if CCW pump on associated train not running.
391	Disc switch Q1R18A0004A space heater power supply bkr is N1R19L001J-BKR11.
392	Disc switch Q1R18A0004B space heater power supply bkr is N1R19L001J-BKR13.
579	Disconnect is required to be Closed when component is aligned to A Train. Disconnect is required to be Open when component is aligned to B Train.
580	Disconnect is required to be Closed when component is aligned to B Train. Disconnect is required to be Open when component is aligned to A Train.

A2.1.S SRO only Equipment Control ADMIN G2.2.41

TITLE: Determine Isolation Boundaries for a CCW Pump Check Valve.

EVALUATION LOCATION: ☐SIMULATOR ☐CONTROL ROOM ☒CLASSROOM

PROJECTED TIME: 30 MIN SIMULATOR IC NUMBER: N/A

☐ALTERNATE PATH ☐ TIME CRITICAL ☐PRA

JPM DIRECTIONS:

1. Initiation of task may be in group setting, evaluation performed individually upon completion.
2. The SRO-only portion of this task is designed to be implemented after completion of the RO portion of this TASK.
3. There are Two Handouts (#1 and #2); Handout #2 precedes Handout #1 to permit issuing the Handouts in the anticipated sequence: Last page = first task.
4. Requiring the examinee to acquire the required materials may or may not be included as part of the JPM.

TASK STANDARD: Upon successful completion of this JPM, the examinee will:

- Identify the components and positions required to isolate, vent, and drain a section of piping in preparation for maintenance on a CCW discharge check valve.
- Identify the proper sequence of isolation.
- SRO-only: Identify the applicable LCO Action Statements, Required Actions and Completion Times required by the given conditions.

Examinee:		
Overall JPM Performance:	**Satisfactory** ☐	**Unsatisfactory** ☐
Evaluator Comments (attach additional sheets if necessary)		

EXAMINER: _____

Developer	Billy Thornton	Date: 2/8/2011
NRC Approval	SEE NUREG 1021 FORM ES-301-3	

CONDITIONS

When I tell you to begin, you are to DETERMINE ISOLATION BOUNDARIES FOR A CCW PUMP CHECK VALVE. The conditions under which this task is to be performed are:

a. Unit 1 is in Mode 4.
b. 1B CCW pump is aligned to B Train.
c. 1C CCW pump was shut down due to a large leak on Q1P17V001C, CCW PUMP 1C DISCHARGE CHECK VALVE.
d. The 1C CCW pump has been Tagged Out electrically.
e. The eSOMS Tagging computer program is not available.
f. You have been directed to manually prepare a Tag Out Listing for isolation of the check valve and draining of the system for repair of the check valve.
g. The Tag Out Listing should identify the **proper components to be operated, correct positioning action, and correct sequence of operation**.

When the above actions are completed, evaluate Tech Spec and TRM requirements using the following additional information:

a. All RCP's are secured.
b. All Steam Generator Wide Range Levels are 70% and decreasing with draining in progress.
c. 1B RHR pump is running.

Based on these conditions, evaluate Tech Spec and TRM requirements and perform the following:

List all **TECH SPEC and TRM CONDITIONS, REQUIRED ACTIONS, and COMPLETION TIMES for LCO's** not met, if any.

INITIATING **CUE**: IF you have no questions, you may begin.

EVALUATION CHECKLIST

ELEMENTS:	STANDARDS:	RESULTS: (CIRCLE)
____ **START TIME**		
* 1. Determines that 1C CCW PUMP DISCH ISO, V002C is required to be closed first to isolate the high pressure portion from the lower pressure portions of the system.	**V002C – CLOSED** (See Tag Out sheet)	S / U
* 2. Determines that the three other isolation flowpaths should be closed next.	**V278C – CLOSED** **V109C – CLOSED** **V144C – CLOSED** (Sequence of isolation of these valves does not matter. See Tag Out sheet)	S / U

EVALUATION CHECKLIST

ELEMENTS:	STANDARDS:	RESULTS: (CIRCLE)
Note to Evaluator: Steps 3 through 5 may be performed in any order.		
* 3. Determines that V281C is required to be open to drain the section between discharge check valve (QV001C) and isolation valve (QV002C).	**V281C –OPEN** (See Tag Out sheet)	S / U
* 4. Determines that at least one drain valve is opened to drain the pump section of piping. (All drain valves may be opened to facilitate draining, but at least one drain is required to satisfy the Critical portion of this step.)	**V157F – OPEN** **V157E – OPEN** (Either of these valves or both of these valves may be opened, but at least one is required.) (Sequence of opening these valves does not matter. See Tag Out sheet)	S / U
* 5. Determines that at least one vent valve is opened to vent the system. (All vent valves may be opened to facilitate venting, but at least one vent is required to satisfy the Critical portion of this step.)	**V279C –OPEN** **V156F – OPEN** **V156C – OPEN** (Any one of these valves or all of these valves may be opened, but at least one is required.) (Sequence of opening these valves does not matter. See Tag Out sheet)	S / U

EVALUATION CHECKLIST

ELEMENTS:	STANDARDS:	RESULTS: (CIRCLE)
	SRO PORTION BELOW	
* 6. Evaluates Tech Specs	Determines that an LCO exists for:	S / U
3.7.7 Component Cooling Water (CCW) System	CONDITION A – One CCW train inoperable. REQUIRED ACTION – A.1 Restore CCW train to OPERABLE status in 72 hours. In addition, per a note in REQUIRED ACTION A.1 – ---------- Enter applicable Conditions and Required Actions of LCO 3.4.6, "RCS Loops—MODE 4," for Residual heat removal loops made inoperable by CCW. ---------- (LCO 3.4.6 may be evaluated before 3.7.7. This is acceptable as long as both are evaluated.)	

EVALUATION CHECKLIST

ELEMENTS:	STANDARDS:	RESULTS: (CIRCLE)
* 7. Evaluates Tech Specs	Determines that an LCO exists for:	S / U
3.4.6 RCS Loops—MODE 4	CONDITION B – One required RHR loop inoperable. AND Two required RCS loops inoperable. REQUIRED ACTION – B.1 Be in Mode 5 in 24 hours. (LCO 3.4.6 may be evaluated before 3.7.7. This is acceptable as long as both are evaluated.)	

_____ **STOP TIME**

Terminate when all elements of the task have been completed.

CRITICAL ELEMENTS: Critical Elements are denoted with an asterisk (*) before the element number.

GENERAL REFERENCES:

1. FNP-1-SOP-23.0A, VER 10.0
2. D175002 SHEET 1
3. NMP-AD-003, VER 13.0
4. NMP-AD-003-001, VER 2.0
5. NMP-AD-003-002, VER 6.0
6. NMP-AD-003-F02, VER 1.0
7. KA: G2.2.41 RO 3.5 SRO 3.9
   G2.2.40 SRO 4.7

GENERAL TOOLS AND EQUIPMENT:

1. FNP-1-SOP-23.0A, VER 10.0
2. D175002 SHEET 1
3. NMP-AD-003, VER 13.0
4. NMP-AD-003-001, VER 2.0
5. NMP-AD-003-002, VER 6.0
6. NMP-AD-003-F02, VER 1.0
7. Handout TO for 1C CCW pump electrical
8. Handout for Candidate NMP-AD-003-F02 Tagout Listing
9. Technical Specifications, Bases, TRM, and TRM bases

Critical ELEMENT justification:

STEP	Evaluation
1	**Critical:** Task completion: required to determine that the discharge valve should be closed first to isolate the high pressure portion of the system.
2	**Critical:** Task completion: required to determine that all other isolation valves that would isolate the discharge check valve from the rest of the CCW system are to be closed next, prior to opening vents and drains.
3	**Critical:** Task completion: required to open drain valve QV281C to prevent pressurization of piping in case of leakby of the discharge isolation valve.
4	**Critical:** Task completion: required to determine that at least one drain valve in the pump section of piping is to be opened to allow proper drainage for maintenance.
5	**Critical:** Task completion: required to determine that at least one vent valve is to be opened to vent the system to allow proper drainage for maintenance.
6	**Critical:** Task completion: required to determine Tech Spec entry and application for conditions.
7	**Critical:** Task completion: required to determine Tech Spec entry and application for conditions.

COMMENTS:

Southern Nuclear Operating Company			
SOUTHERN COMPANY Energy to Serve Your World	Nuclear Management Form	Tagout Tag Listing	NMP-AD-003-F02 Version 1.0 Page 1 of 1

Clearance: # :	FOR TRAINING USE ONLY
Tagout: #:	HLT-34 NRC EXAM

Tag		Equipment	Placement					Restoration				
Num	Type	Equipment ID Description/Location	Verif	Seq	Configuration Notes	1st Verif	2nd Verif	Verif	Seq	Configuration Notes	1st Verif	2nd Verif
		1C CCW PUMP DISCH ISO Q1P17V002C		1	CLOSED							
		1C CCW PUMP CHEM MIXING ISO Q1P17V278C		2	CLOSED							
		1C CCW PUMP SUCT ISO Q1P17V109C		3	CLOSED							
		1C CCW PUMP MINI-FLOW Q1P17V144C		4	CLOSED							
		1C CCW PUMP DISCH HDR DRN Q1P17V281C		5	OPEN							
		1C CCW PUMP DRN Q1P17V157F		6	OPEN							
		1C CCW PUMP DRN Q1P17V157E		7	OPEN							
		1C CCW PUMP SUCT LINE VT Q1P17V279C		8	OPEN							
		1C CCW PUMP VT Q1P17V156F		9	OPEN							
		1C CCW PUMP VT Q1P17V156C		10	OPEN							

KEY

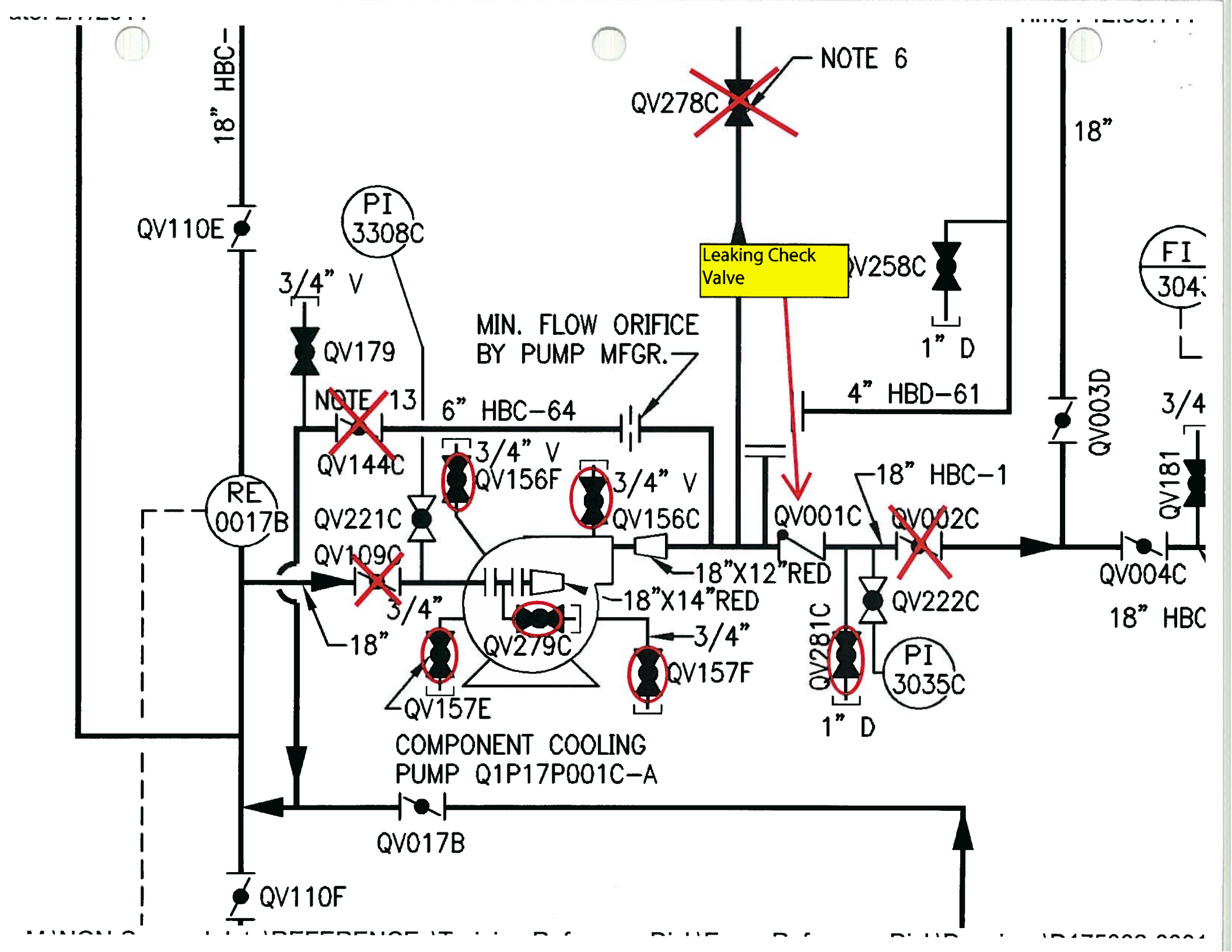
18" HBC-
QV110E
PI
3308C
3/4" V
QV179
NOTE 13
QV144C
6" HBC-64
MIN. FLOW ORIFICE
BY PUMP MFGR.
3/4" V
QV156F
3/4" V
QV156C
RE
0017B
QV221C
QV109C
3/4"
18"
QV279C
18"X14"RED
18"X12"RED
3/4"
QV157F
QV157E
COMPONENT COOLING
PUMP Q1P17P001C-A
QV017B
QV110F
QV278C
NOTE 6
Leaking Check
Valve
QV258C
1" D
4" HBD-61
18"
QV003D
QV001C
18" HBC-1
QV002C
QV281C
1" D
QV222C
PI
3035C
QV004C
18" HBC
FI
304
3/4
QV181

3.7 PLANT SYSTEMS

3.7.7 Component Cooling Water (CCW) System

LCO 3.7.7 Two CCW trains shall be OPERABLE.

APPLICABILITY: MODES 1, 2, 3, and 4.

ACTIONS

CONDITION	REQUIRED ACTION		COMPLETION TIME
A. One CCW train inoperable.	A.1	----------NOTE---------- Enter applicable Conditions and Required Actions of LCO 3.4.6, "RCS Loops — MODE 4," for residual heat removal loops made inoperable by CCW. ----------	
		Restore CCW train to OPERABLE status.	72 hours
B. Required Action and associated Completion Time of Condition A not met.	B.1	Be in MODE 3.	6 hours
	AND		
	B.2	Be in MODE 5.	36 hours

SURVEILLANCE REQUIREMENTS

SURVEILLANCE		FREQUENCY
SR 3.7.7.1	----------NOTE---------- Isolation of CCW flow to individual components does not render the CCW System inoperable. ---------- Verify each accessible CCW manual, power operated, and automatic valve in the flow path servicing safety related equipment, that is not locked, sealed, or otherwise secured in position, is in the correct position.	31 days
SR 3.7.7.2	Verify each CCW automatic valve in the flow path that is not locked, sealed, or otherwise secured in position, actuates to the correct position on an actual or simulated actuation signal.	18 months
SR 3.7.7.3	Verify each CCW pump starts automatically on an actual or simulated actuation signal.	18 months

3.4 REACTOR COOLANT SYSTEM (RCS)

3.4.6 RCS Loops — MODE 4

LCO 3.4.6 Two loops consisting of any combination of RCS loops and residual heat removal (RHR) loops shall be OPERABLE, and one loop shall be in operation.

----------NOTES----------

1. All reactor coolant pumps (RCPs) and RHR pumps may not be in operation for ≤ 2 hours per 8 hour period provided:

   a. No operations are permitted that would cause reduction of the RCS boron concentration; and

   b. Core outlet temperature is maintained at least 10°F below saturation temperature.

2. No RCP shall be started with any RCS cold leg temperature ≤ 325°F unless:

   a. The secondary side water temperature of each steam generator (SG) is < 50°F above each of the RCS cold leg temperatures; or

   b. The pressurizer water volume is less than 770 cubic feet (24% of wide range, cold, pressurizer level indication).

APPLICABILITY: MODE 4.

ACTIONS

CONDITION	REQUIRED ACTION	COMPLETION TIME
A. One required RCS loop inoperable. AND Two RHR loops inoperable.	A.1 Initiate action to restore a second loop to OPERABLE status.	Immediately

ACTIONS

CONDITION	REQUIRED ACTION	COMPLETION TIME
B. One required RHR loop inoperable. AND Two required RCS loops inoperable.	B.1 Be in MODE 5.	24 hours
C. Required RCS or RHR loops inoperable. OR No RCS or RHR loop in operation.	C.1 Suspend all operations involving a reduction of RCS boron concentration. AND C.2 Initiate action to restore one loop to OPERABLE status and operation.	Immediately Immediately

SURVEILLANCE REQUIREMENTS

SURVEILLANCE		FREQUENCY
SR 3.4.6.1	Verify one RHR or RCS loop is in operation.	12 hours
SR 3.4.6.2	Verify SG secondary side water levels are ≥ 75% (wide range) for required RCS loops.	12 hours
SR 3.4.6.3	Verify correct breaker alignment and indicated power are available to the required pump that is not in operation.	7 days

CONDITIONS

When I tell you to begin, you are to DETERMINE ISOLATION BOUNDARIES FOR A CCW PUMP CHECK VALVE. The conditions under which this task is to be performed are:

a. Unit 1 is in Mode 4.
b. 1B CCW pump is aligned to B Train.
c. 1C CCW pump was shut down due to a large leak on Q1P17V001C, CCW PUMP 1C DISCHARGE CHECK VALVE.
d. The 1C CCW pump has been Tagged Out electrically.
e. The eSOMS Tagging computer program is not available.
f. You have been directed to manually prepare a Tag Out Listing for isolation of the check valve and draining of the system for repair of the check valve.
g. The Tag Out Listing should identify the **proper components to be operated, correct positioning action, and correct sequence of operation**.

When the above actions are completed, evaluate Tech Spec and TRM requirements using the following additional information:

a. All RCP's are secured.
b. All Steam Generator Wide Range Levels are 70% and decreasing with draining in progress.
c. 1B RHR pump is running.

Based on these conditions, evaluate Tech Spec and TRM requirements and perform the following:

List all **TECH SPEC and TRM CONDITIONS, REQUIRED ACTIONS, and COMPLETION TIMES for LCO's** not met, if any.

Clearance: # :	FOR TRAINING USE ONLY
Tagout: #:	HLT-34 NRC EXAM

Tag		Equipment	Placement					Restoration				
Num	Type	Equipment ID Description/Location	Verif	Seq	Configuration Notes	1st Verif	2nd Verif	Verif	Seq	Configuration Notes	1st Verif	2nd Verif
1-DT-11-30,000	DT	1C CCW MCB handswitch Q1P17HS3307CA-A	CV	1	STOP/AUTO	*BT*	*HF*					
1-DT-11-30,001	DT	1C CCW Hot Shutdown Panel Local/Remote Switch Q1P17HS3307CC-A	CV	2	REMOTE	*BT*	*HF*					
1-DT-11-30,002	DT	1C CCW Pump 4160V breaker Q1R15BKRDF04	CV	3	RACKED OUT	*BT*	*HF*					

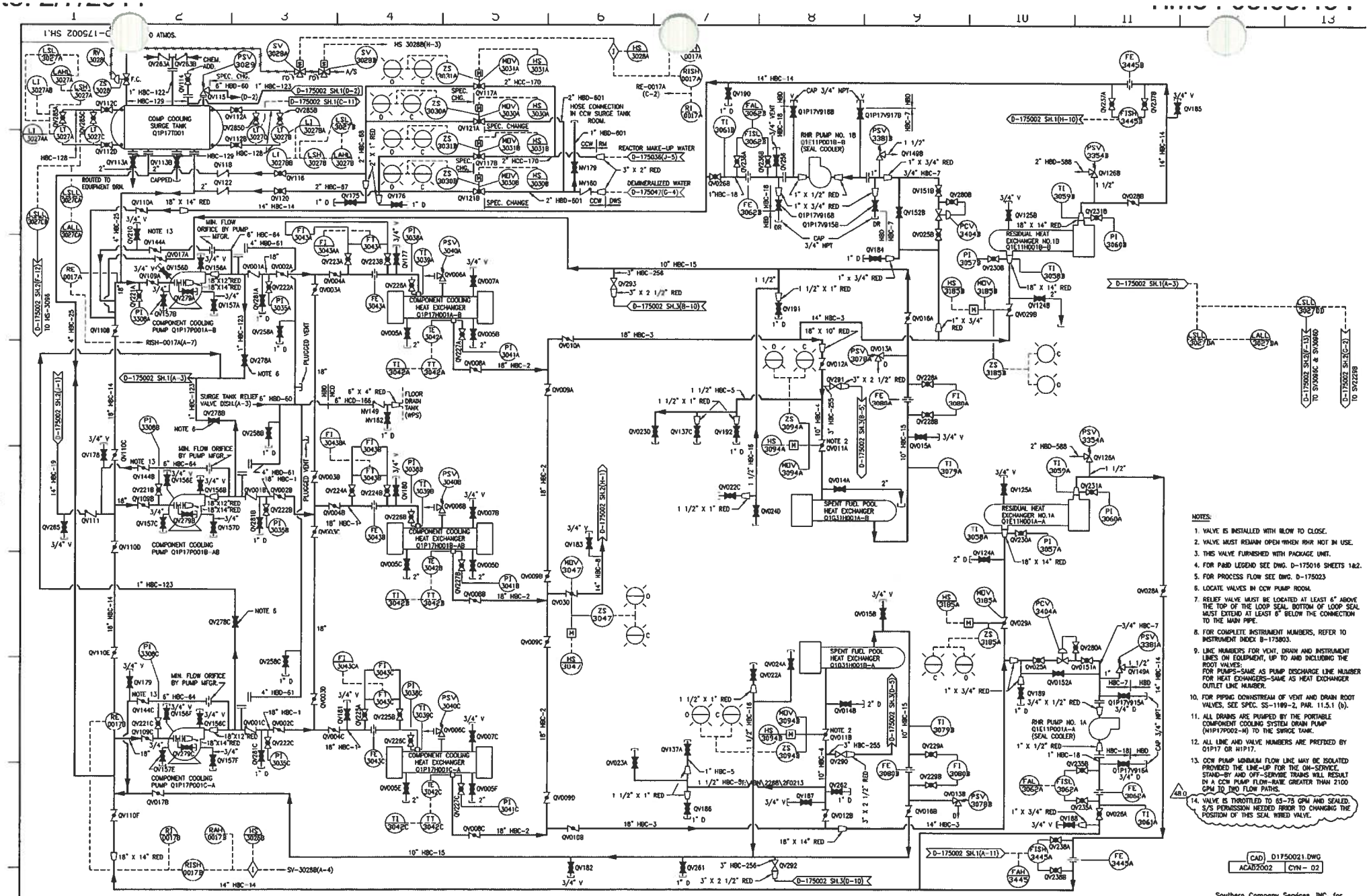

NOTES:

1. VALVE IS INSTALLED WITH BLOW TO CLOSE.
2. VALVE MUST REMAIN OPEN WHEN RHR NOT IN USE.
3. THIS VALVE FURNISHED WITH PACKAGE UNIT.
4. FOR P&ID LEGEND SEE DWG. D-175016 SHEETS 1&2.
5. FOR PROCESS FLOW SEE DWG. D-175023
6. LOCATE VALVES IN CCW PUMP ROOM.
7. RELIEF VALVE MUST BE LOCATED AT LEAST 6" ABOVE THE TOP OF THE LOOP SEAL. BOTTOM OF LOOP SEAL MUST EXTEND AT LEAST 6" BELOW THE CONNECTION TO THE MAIN PIPE.
8. FOR COMPLETE INSTRUMENT NUMBERS, REFER TO INSTRUMENT INDEX B-175803.
9. LINE NUMBERS FOR VENT, DRAIN AND INSTRUMENT LINES ON EQUIPMENT, UP TO AND INCLUDING THE ROOT VALVES:
   FOR PUMPS-SAME AS PUMP DISCHARGE LINE NUMBER
   FOR HEAT EXCHANGERS-SAME AS HEAT EXCHANGER OUTLET LINE NUMBER.
10. FOR PIPING DOWNSTREAM OF VENT AND DRAIN ROOT VALVES, SEE SPEC. SS-1199-2, PAR. 11.5.1 (b).
11. ALL DRAINS ARE PUMPED BY THE PORTABLE COMPONENT COOLING SYSTEM DRAIN PUMP (N1P17P002-M) TO THE SURGE TANK.
12. ALL LINE AND VALVE NUMBERS ARE PREFIXED BY Q1P17 OR N1P17.
13. CCW PUMP MINIMUM FLOW LINE MAY BE ISOLATED PROVIDED THE LINE-UP FOR THE ON-SERVICE, STAND-BY AND OFF-SERVICE TRAINS WILL RESULT IN A CCW PUMP FLOW-RATE GREATER THAN 2100 GPM TO TWO FLOW PATHS.
14. VALVE IS THROTTLED TO 65-75 GPM AND SEALED. S/S PERMISSION NEEDED PRIOR TO CHANGING THE POSITION OF THIS SEAL WIRED VALVE.

Clearance: # :	FOR TRAINING USE ONLY
Tagout: #:	HLT-34 NRC EXAM

Tag		Equipment	Placement					Restoration				
Num	Type	Equipment ID Description/Location	Verif	Seq	Configuration Notes	1st Verif	2nd Verif	Verif	Seq	Configuration Notes	1st Verif	2nd Verif

UNIT 1

PROCEDURE NUMBER: **FNP-1-SOP-23.0A** VERSION: **10.0** Safety Related

TITLE: **COMPONENT COOLING WATER SYSTEM**

APPROVED: **Jim L. Hunter (for)** DATE ISSUED: **08-18-2006**

Operations Manager

PROCEDURE USAGE REQUIREMENTS-per FNP-0-AP-6	SECTIONS
Continuous Use	**ALL**
Reference Use	
Information Use	

Situation requiring completion of check list: _____

PERSONS COMPLETING CHECKLIST

NAME (PRINTED)	INITIALS	NAME (PRINTED)	INITIALS	NAME (PRINTED)	INITIALS	NAME (PRINTED)	INITIALS

DATE/TIME 1ST CHECK COMPLETE	DATE / TIME	DATE/TIME VERIFICATION COMPLETE (IF REQUIRED)	DATE / TIME
		SUPERVISOR REVIEW SIGNATURE	DATE / TIME

WARNING: DO NOT USE ANY PAGE WHICH DOES NOT HAVE A VISIBLE BORDERLINE AT THE BOTTOM OF THE PAGE AND COMPLETE READABLE TITLE AT THE TOP OF THE PAGE.

Active Procedure: FNP-1-SOP-23.0A, COMPONENT COOLING WATER SYSTEM

Type: SOP, Unit: 1, Revision: 10

Step: 1.00 4160V Bus 1G - U1 AB-N/R-121`- Switchgear Room

Equip Operator Id:	Equip Description:	Equip Location:	Required Config:	Actual Config:	Verification:	Initials	
Q1R15BKRDG04 Notes: 76	COMPONENT COOLING WATER PUMP 1A 52-DG04	4160V BUS 1G - U1-AB-N/R-121`-SWGR RM	RACKED IN		IV		
Q1R15BKRDG05 Notes: 76, 77	COMPONENT COOLING WATER PUMP 1B 52-DG05 (B TRAIN)	4160V BUS 1G - U1-AB-N/R-121`-SWGR RM	RACKED IN		IV		

Step: 1.10 4160V Bus 1F - U1 AB-N/R-139`- Switchgear Room

Equip Operator Id:	Equip Description:	Equip Location:	Required Config:	Actual Config:	Verification:	Initials	
Q1R15BKRDF05 Notes: 77	COMPONENT COOLING WATER PUMP 1B 52-DF05 (A TRAIN)	4160V BUS 1F - U1-AB-N/R-139`-SWGR RM	RACKED IN		IV		
Q1R15BKRDF04	COMPONENT COOLING WATER PUMP 1C 52-DF04	4160V BUS 1F - U1-AB-N/R-139`-SWGR RM	RACKED IN		IV		

Step: 1.20 MCC 1U - U1 AB-RAD-139`- Elec Pen Room

Equip Operator Id:	Equip Description:	Equip Location:	Required Config:	Actual Config:	Verification:	Initials	
Q1R17BKRFUD4	MKUP TO CCW FROM RMW Q1P17MOV3031A	1U MCC - Q1R17B008-A, UNIT 1, 139`RAD ELEC.PENE.ROOM	CLOSED		IV		
Q1R17BKRFUE3	CCW TO 1A RHR HX Q1P17MOV3185A	1U MCC - Q1R17B008-A, UNIT 1, 139`RAD ELEC.PENE.ROOM	CLOSED		IV		
Q1R17BKRFUI3	MKUP TO CCW FROM DW STOR TK Q1P17MOV3030A	1U MCC - Q1R17B008-A, UNIT 1, 139`RAD ELEC.PENE.ROOM	CLOSED		IV		
Q1R17BKRFUS4	CCW TO 1B SFP HX Q1P17MOV3094B	1U MCC - Q1R17B008-A, UNIT 1, 139`RAD ELEC.PENE.ROOM	CLOSED		IV		

Step: 1.30 MCC 1V - U1 AB-RAD-139`- Elec Pen Room

Equip Operator Id:	Equip Description:	Equip Location:	Required Config:	Actual Config:	Verification:	Initials	
Q1R17BKRFVD2	CCW TO SECONDARY HXS Q1P17MOV3047	1V MCC - Q1R17B009-B,UNIT 1, 139`RAD ELEC.PENE.ROOM	CLOSED		IV		
Q1R17BKRFVD3	CCW TO 1A SFP HX Q1P17MOV3094A	1V MCC - Q1R17B009-B,UNIT 1, 139`RAD ELEC.PENE.ROOM	CLOSED		IV		

Active Procedure: FNP-1-SOP-23.0A, COMPONENT COOLING WATER SYSTEM

Type: SOP, Unit: 1, Revision: 10

Step: 1.30 — MCC 1V - U1 AB-RAD-139`- Elec Pen Room

Equip Operator Id:	Equip Description:	Equip Location:	Required Config:	Actual Config:	Verification:	Initials	
Q1R17BKRFVG4	MKEUP TO CCW FROM DW STOR TK Q1P17MOV3030B	1V MCC - Q1R17B009-B,UNIT 1, 139`RAD ELEC.PENE.ROOM	CLOSED		IV		
Q1R17BKRFVG5	MKUP TO CCW FROM RMW Q1P17MOV3031B	1V MCC - Q1R17B009-B,UNIT 1, 139`RAD ELEC.PENE.ROOM	CLOSED		IV		
Q1R17BKRFVU4	CCW TO 1B RHR HX Q1P17MOV3185B	1V MCC - Q1R17B009-B,UNIT 1, 139`RAD ELEC.PENE.ROOM	CLOSED		IV		

Step: 1.40 — U1-AB-N/R-100`- CCW HX Room

Equip Operator Id:	Equip Description:	Equip Location:	Required Config:	Actual Config:	Verification:	Initials	
Q1R18A0004A Notes: 579	1B CCW PUMP 4 KV DISCONNECT SWITCH 1A	U1 100` NON-RAD RM 185	ALIGNED PER NOTE 579		IV		
Q1R18A0004A-A-HTR1 Notes: 391	DISC SWITCH SPACE HTR BKR	1B CCW PUMP 4KV DISC.SW. Q1R18A0004A-A, IN LOWER COMPT	CLOSED		IV		

Step: 1.50 — U1-AB-N/R-100`- CCW HX Room

Equip Operator Id:	Equip Description:	Equip Location:	Required Config:	Actual Config:	Verification:	Initials	
Q1R18A0004B Notes: 580	CCW PUMP 1B 4KV DISC SW 1B	U1 100` NON-RAD RM 185	ALIGNED PER NOTE 580		IV		
Q1R18A0004B-B-HTR1 Notes: 392	DISC SWITCH SPACE HTR BKR	1B CCW PUMP 4KV DISC.SW. Q1R18A0004B-B, IN LOWER COMPT	CLOSED		IV		

Step: 1.60 — Aux Bldg 83` - Floor Drain Tank Room

Equip Operator Id:	Equip Description:	Equip Location:	Required Config:	Actual Config:	Verification:	Initials	
N1P17V162	CCW REL HDR DRN	AUX BLDG 83` - FLOOR DRAIN TANK RM	CLOSED & CAPPED		IV		

Active Procedure: FNP-1-SOP-23.0A, COMPONENT COOLING WATER SYSTEM

Type: SOP, Unit: 1, Revision: 10

Step: 1.70 — Aux Bldg 83` - 1B RHR Pump Room

Equip Operator Id:	Equip Description:	Equip Location:	Required Config:	Actual Config:	Verification:	Initials	
Q1P17V236A	1B RHR PUMP SEAL HX CCW OUTLET FIS-3062B ROOT	AUX BLDG 83` - 1B RHR PUMP RM	OPEN		IV		
Q1P17V236B	1B RHR PUMP SEAL HX CCW OUTLET FIS-3062B ROOT	AUX BLDG 83` - 1B RHR PUMP RM	OPEN		IV		
Q1P17V256	1B RHR PUMP SEAL HX CCW OUTLET VT	AUX BLDG 83` - 1B RHR PUMP RM	CLOSED & CAPPED		IV		
Q1P17V915B	1B RHR PUMP SEAL COOLER CCW INLET DRN	AUX BLDG 83` - 1B RHR PUMP RM	CLOSED & CAPPED		IV		
Q1P17V916B	1B RHR PUMP SEAL COOLER CCW OUTLET DRN	AUX BLDG 83` - 1B RHR PUMP RM	CLOSED & CAPPED		IV		
Q1P17V917B	1B RHR PUMP SEAL COOLER CCW INLET VENT	AUX BLDG 83` - 1B RHR PUMP RM	CLOSED & CAPPED		IV		
Q1P17V918B	1B RHR PUMP SEAL COOLER CCW OUTLET VENT	AUX BLDG 83` - 1B RHR PUMP RM	CLOSED & CAPPED		IV		

Step: 1.80 — Aux Bldg 83` - 1A RHR Pump Room

Equip Operator Id:	Equip Description:	Equip Location:	Required Config:	Actual Config:	Verification:	Initials	
Q1P17V235A	1A RHR PUMP SEAL HX CCW OUTLET FIS-3062A ROOT	AUX BLDG 83` - 1A RHR PUMP RM	OPEN		IV		
Q1P17V235B	1A RHR PUMP SEAL HX CCW OUTLET FIS-3062A ROOT	AUX BLDG 83` - 1A RHR PUMP RM	OPEN		IV		
Q1P17V915A	1A RHR PUMP SEAL COOLER CCW INLET DRN	AUX BLDG 83` - 1A RHR PUMP RM	CLOSED & CAPPED		IV		
Q1P17V916A	1A RHR PUMP SEAL COOLER CCW OUTLET DRN	AUX BLDG 83` - 1A RHR PUMP RM	CLOSED & CAPPED		IV		

Step: 1.90 — Aux Bldg 83` - Corridor Outside RHR HX Room

Equip Operator Id:	Equip Description:	Equip Location:	Required Config:	Actual Config:	Verification:	Initials	
Q1P17V190	1B RHR HX CCW OUTLET DRN	AUX BLDG 83` - CORRIDOR OUTSIDE RHR HX RM	CLOSED & CAPPED		IV		
Q1P17V237A	1B RHR HX CCW OUTLET Q1P17FISH3445B ROOT	AUX BLDG 83` - CORRIDOR OUTSIDE RHR HX RM	OPEN		IV		
Q1P17V237B	1B RHR HX CCW OUTLET Q1P17FISH3445B ROOT	AUX BLDG 83` - CORRIDOR OUTSIDE RHR HX RM	OPEN		IV		

Active Procedure: FNP-1-SOP-23.0A, COMPONENT COOLING WATER SYSTEM

Type: SOP, Unit: 1, Revision: 10

Step: 1.90 — Aux Bldg 83` - Corridor Outside RHR HX Room

Equip Operator Id:	Equip Description:	Equip Location:	Required Config:	Actual Config:	Verification:	Initials	
Q1P17V026B Notes: 275	1B RHR PUMP SEAL HX CCW OUTLET ISO	AUX BLDG 83` - CORRIDOR OUTSIDE RHR HX RM	OPEN & SEALED		IV		
Q1P17V025B	1B RHR PUMP SEAL HX CCW PRESS REG INLET ISO	AUX BLDG 83` - CORRIDOR OUTSIDE RHR HX RM	OPEN		IV		
Q1P17PCV3404B-AIR SUPPLY	1B RHR PUMP SEAL HX CCW PRESS REG	AUX BLDG 83` - CORRIDOR OUTSIDE RHR HX RM	AIR CUT IN		IV		
Q1P17V280B	PRESS REG Q1P17PCV3404B CONT SUPP ISO	AUX BLDG 83` - CORRIDOR OUTSIDE RHR HX RM	OPEN		IV		
Q1P17V151B	1B RHR PUMP SEAL HX CCW PRESS REG OUTLET ISO	AUX BLDG 83` - CORRIDOR OUTSIDE RHR HX RM	OPEN		IV		
Q1P17V184	1B RHR PUMP SEAL HX CCW INLET LINE DRN	AUX BLDG 83` - CORRIDOR OUTSIDE RHR HX RM	CLOSED & CAPPED		IV		
Q1P17V152B	1B RHR PUMP SEAL HX CCW PRESS REG BYP	AUX BLDG 83` - CORRIDOR OUTSIDE RHR HX RM	CLOSED		IV		

Step: 2.00 — Aux Bldg 83` - RHR Hx Room

Equip Operator Id:	Equip Description:	Equip Location:	Required Config:	Actual Config:	Verification:	Initials	
Q1P17V026A Notes: 275	1A RHR PUMP SEAL HX CCW OUTLET ISO	AUX BLDG 83` - RHR HX RM	OPEN & SEALED		IV		
Q1P17V029A Notes: 345	CCW TO 1A RHR HX (Q1P17MOV3185A)	AUX BLDG 83` - RHR HX RM	CLOSED		IV		
Q1P17V188	1A RHR PUMP SEAL HX CCW OUTLET VT	AUX BLDG 83` - RHR HX RM	CLOSED & CAPPED		IV		
Q1P17V124B	1B RHR HX CCW INLET DRN	AUX BLDG 83` - RHR HX RM	CLOSED & CAPPED		IV		
Q1P17V230B	1B RHR HX CCW INLET PI-3057B ROOT	AUX BLDG 83` - RHR HX RM	OPEN		IV		
Q1P17V125B	1B RHR HX CCW VT	AUX BLDG 83` - RHR HX RM	CLOSED & CAPPED		IV		

Active Procedure: FNP-1-SOP-23.0A, COMPONENT COOLING WATER SYSTEM

Type: SOP, Unit: 1, Revision: 10

Step: 2.00 Aux Bldg 83` - RHR Hx Room

Equip Operator Id:	Equip Description:	Equip Location:	Required Config:	Actual Config:	Verification:	Initials	
Q1P17V231B	1B RHR HX CCW OUTLET PI-3060B ROOT	AUX BLDG 83` - RHR HX RM	OPEN		IV		
Q1P17V028B Notes: 275	1B RHR HX CCW OUTLET ISO	AUX BLDG 83` - RHR HX RM	OPEN & SEALED		IV		
Q1P17V029B Notes: 345	CCW TO 1B RHR HX (Q1P17MOV3185B)	AUX BLDG 83` - RHR HX RM	CLOSED		IV		
Q1P17V185	1B RHR HX CCW OUTLET VT	AUX BLDG 83` - RHR HX RM	CLOSED & CAPPED		IV		
Q1P17V124A	1A RHR HX CCW INLET DRN	AUX BLDG 83` - RHR HX RM	CLOSED & CAPPED		IV		
Q1P17V230A	1A RHR HX CCW INLET PI-3057A ROOT	AUX BLDG 83` - RHR HX RM	OPEN		IV		
Q1P17V125A	1A RHR HX CCW VT	AUX BLDG 83` - RHR HX RM	CLOSED & CAPPED		IV		
Q1P17V231A	1A RHR HX CCW OUTLET PI-3060A ROOT	AUX BLDG 83` - RHR HX RM	OPEN		IV		
Q1P17V028A Notes: 275	1A RHR HX CCW OUTLET ISO	AUX BLDG 83` - RHR HX RM	OPEN & SEALED		IV		
Q1P17PCV3404A-AIR SUPPLY	1A RHR PUMP SEAL HX CCW PRESS REG	AUX BLDG 83` - RHR HX RM	AIR CUT IN		IV		
Q1P17V280A	PRESS REG 3404A CONT SUPP ISO	AUX BLDG 83` - RHR HX RM	OPEN		IV		
Q1P17V151A	1A RHR PUMP SEAL HX PRESS REG OUTLET ISO	AUX BLDG 83` - RHR HX RM	OPEN		IV		
Q1P17V189	1A RHR PUMP SEAL HX CCW INLET LINE DRN	AUX BLDG 83` - RHR HX RM	CLOSED & CAPPED		IV		
Q1P17V152A	1A RHR PUMP SEAL HX CCW PRESS REG BYP	AUX BLDG 83` - RHR HX RM	CLOSED		IV		
Q1P17V025A	1A RHR PUMP SEAL HX CCW PRESS REG INLET	AUX BLDG 83` - RHR HX RM	OPEN		IV		
Q1P17V238A	1A RHR HX CCW OUTLET Q1P17FISH3445A ROOT	AUX BLDG 83` - RHR HX RM	OPEN		IV		
Q1P17V238B	1A RHR HX CCW OUTLET Q1P17FISH3445A ROOT	AUX BLDG 83` - RHR HX RM	OPEN		IV		

Active Procedure: FNP-1-SOP-23.0A, COMPONENT COOLING WATER SYSTEM

Type: SOP, Unit: 1, Revision: 10

Step: 2.10 — Aux Bldg 100` - Liquid Waste Panel Area

Equip Operator Id:	Equip Description:	Equip Location:	Required Config:	Actual Config:	Verification:	Initials	
Q1P17V182	CHG PUMPS & 1B SFP HX CCW RTN LINE VT	AUX BLDG 100` - LIQUID WASTE PANEL AREA	CLOSED & CAPPED		IV		
Q1P17V261	CHG PUMPS & 1B SFP HX CCW RTN LINE DRN	AUX BLDG 100` - LIQUID WASTE PANEL AREA	CLOSED & CAPPED		IV		
Q1P17V187	CHG PUMPS & 1B SFP HX CCW SUPP LINE VT	AUX BLDG 100` - LIQUID WASTE PANEL AREA	CLOSED & CAPPED		IV		
Q1P17V262	CHG PUMPS & 1B SFP HX CCW SUPP LINE DRN	AUX BLDG 100` - LIQUID WASTE PANEL AREA	CLOSED & CAPPED		IV		

Step: 2.20 — Aux Bldg 100` - Chemical Drain Tank Room

Equip Operator Id:	Equip Description:	Equip Location:	Required Config:	Actual Config:	Verification:	Initials	
Q1P17V183	SEC HXS CCW SUPP LINE VT	AUX BLDG 100` - CHEMICAL DRAIN TANK RM	CLOSED & CAPPED		IV		
Q1P17V265	SEC HXS CCW RTN LINE VT	AUX BLDG 100` - CHEMICAL DRAIN TANK RM	CLOSED & CAPPED		IV		

Step: 2.30 — Aux Bldg 100` - Corridor

Equip Operator Id:	Equip Description:	Equip Location:	Required Config:	Actual Config:	Verification:	Initials	
Q1P17HV2229-AIR SUPPLY	CCW SUPP TO SAMPLE CLRS	AUX BLDG 100` - CORRIDOR	AIR CUT IN		IV		
Q1P17HV2229-JACK	CCW SUPP TO SAMPLE CLRS (HAND JACK)	AUX BLDG 100` - CORRIDOR	FULL OUT		IV		
Q1P17HV2229	CCW SUPP TO SAMPLE CLRS	AUX BLDG 100` - CORRIDOR	OPEN		IV		
Q1P17V286	INLET ISO FOR HV-2229 CCW TO SAMPLE CLRS	AUX BLDG 100` - CORRIDOR	OPEN		IV		
N1P17V202	CCW SUPP TO SAMPLE CLR DRN	AUX BLDG 100` - CORRIDOR	CLOSED & CAPPED		IV		
Q1P17V287 Notes: 275, 289	CCW RTN FROM SAMPLE CLRS	AUX BLDG 100` - CORRIDOR	65-75 GPM & SEALED		IV		
N1P17V201	CCW RTN FROM SAMPLE CLRS DRN	AUX BLDG 100` - CORRIDOR	CLOSED & CAPPED		IV		
Q1P17V031	LTDN HX CCW INLET ISO	AUX BLDG 100` - CORRIDOR	OPEN		IV		

Active Procedure: FNP-1-SOP-23.0A, COMPONENT COOLING WATER SYSTEM

Type: SOP, Unit: 1, Revision: 10

Step: 2.30 Aux Bldg 100` - Corridor

Equip Operator Id:	Equip Description:	Equip Location:	Required Config:	Actual Config:	Verification:	Initials	
Q1P17V260	SEAL WTR HX CCW INLET DRN	AUX BLDG 100` - CORRIDOR	CLOSED & CAPPED		IV		
Q1P17V034	SEAL WTR HX CCW INLET ISO	AUX BLDG 100` - CORRIDOR	OPEN		IV		
Q1P17V253A	LTDN HX CCW OUTLET FI-3074 ROOT	AUX BLDG 100` - CORRIDOR	OPEN		IV		
Q1P17V253B	LTDN HX CCW OUTLET FI-3074 ROOT	AUX BLDG 100` - CORRIDOR	OPEN		IV		
Q1P17V033A	LTDN HX CCW INLET TEMP CONT ISO	AUX BLDG 100` - CORRIDOR	OPEN		IV		
Q1P17TV3083-AIR SUPPLY	LTDN HX CCW TEMP CONT	AUX BLDG 100` - CORRIDOR	AIR CUT IN		IV		
Q1P17TV3083-JACK	LTDN HX CCW TEMP CONT (HAND JACK DEVICE)	AUX BLDG 100` - CORRIDOR	NEUTRAL POSITION & SEALED		IV		
Q1P17V033B Notes: 275	LTDN HX CCW OUTLET TEMP CONT ISO	AUX BLDG 100` - CORRIDOR	OPEN & SEALED		IV		
Q1P17V123 Notes: 9	LTDN HX CCW TEMP CONT BYP	AUX BLDG 100` - CORRIDOR	CLOSED		IV		
Q1P17V252A	SEAL WTR HX CCW OUTLET FI-3077 ROOT	AUX BLDG 100` - CORRIDOR	OPEN		IV		
Q1P17V252B	SEAL WTR HX CCW OUTLET FI-3077 ROOT	AUX BLDG 100` - CORRIDOR	OPEN		IV		
Q1P17V036 Notes: 275 12:1.	SEAL WTR HX CCW OUTLET ISO	AUX BLDG 100` - CORRIDOR	2 3/4 TURNS OPEN & SEALED		IV		Page
Q1P17V037	SEAL WTR HX CCW OUTLET ISO	AUX BLDG 100` - CORRIDOR	OPEN		IV		
Q1P17V254	LTDN HX CCW TEMP CONT BYP DRN	AUX BLDG 100` - CORRIDOR	CLOSED & CAPPED		IV		
Q1P17HV3096B	CCW TO EVAP PKGS & H2 RECOMB	U1 100` RAD-SIDE, OVERHEAD, OUTSIDE DOOR TO CHG PUMP HALLWAY	OPEN		IV		
Q1P17HV3096B-AIR SUPPLY	CCW TO EVAP PKGS & H2 RECOMB	AUX BLDG 100` - CORRIDOR	AIR CUT IN		IV		

Active Procedure: FNP-1-SOP-23.0A, COMPONENT COOLING WATER SYSTEM

Type: SOP, Unit: 1, Revision: 10

Step: 2.30 — Aux Bldg 100` - Corridor

Equip Operator Id:	Equip Description:	Equip Location:	Required Config:	Actual Config:	Verification:	Initials	
Q1P17HV3096B-JACK	CCW TO EVAP PKGS & H2 RECOMB (MANUAL JACKING DEVICE)	U1 100` RAD-SIDE, OVERHEAD, OUTSIDE DOOR TO CHG PUMP HALLWAY	COLLAR DISENGAGED AND LOCKSCREW TIGHT		IV		
Q1P17HV3096A	CCW FROM EVAP PKGS & H2 RECOMB	AUX BLDG 100` - CORRIDOR	OPEN		IV		
Q1P17HV3096A-AIR SUPPLY	CCW FROM EVAP PKGS & H2 RECOMB	AUX BLDG 100` - CORRIDOR	AIR CUT IN		IV		
Q1P17HV3096A-JACK	CCW FROM EVAP PKGS & H2 RECOMB (MANUAL JACKING DEVICE)	AUX BLDG 100` - CORRIDOR	COLLAR DISENGAGED AND LOCKSCREW TIGHT		IV		

Step: 2.35 — Aux Bldg 100` - Letdown Hx Room

Equip Operator Id:	Equip Description:	Equip Location:	Required Config:	Actual Config:	Verification:	Initials	
Q1P17V133	LTDN HX CCW INLET LINE DRN	AUX BLDG 100` - LETDOWN HX RM	CLOSED		IV		
Q1P17V134	LTDN HX CCW OUTLET VT	AUX BLDG 100` - LETDOWN HX RM	CLOSED & CAPPED		IV		

Step: 2.40 — Aux Bldg 100` - Seal Water Hx Room

Equip Operator Id:	Equip Description:	Equip Location:	Required Config:	Actual Config:	Verification:	Initials	
Q1P17V131	SEAL WTR HX CCW DRN	AUX BLDG 100` - SEAL WATER HX RM	CLOSED & CAPPED		IV		
Q1P17V132	SEAL WTR HX CCW OUTLET VT	AUX BLDG 100` - SEAL WATER HX RM	CLOSED & CAPPED		IV		

Step: 2.50 — Aux Bldg 100` - Charging Pump Hallway

Equip Operator Id:	Equip Description:	Equip Location:	Required Config:	Actual Config:	Verification:	Initials	
Q1P17V192	CHG PUMP CCW DRN	AUX BLDG 100` - CHARGING PUMP HALLWAY	CLOSED & CAPPED		IV		
Q1P17V137C	CHG PUMP CCW HDR DRN	AUX BLDG 100` - CHARGING PUMP HALLWAY	CLOSED & CAPPED		IV		
Q1P17V022C	CHG PUMP CCW HDR DRN	AUX BLDG 100` - CHARGING PUMP HALLWAY	CLOSED & CAPPED		IV		
Q1P17V024D	CHG PUMPS CCW DRN	AUX BLDG 100` - CHARGING PUMP HALLWAY	CLOSED & CAPPED		IV		

12:1 Page

Active Procedure: FNP-1-SOP-23.0A, COMPONENT COOLING WATER SYSTEM

Type: SOP, Unit: 1, Revision: 10

Step: 2.50 — Aux Bldg 100` - Charging Pump Hallway

Equip Operator Id:	Equip Description:	Equip Location:	Required Config:	Actual Config:	Verification:	Initials	
Q1P17V023D	CHG PUMPS CCW DRN	AUX BLDG 100` - CHARGING PUMP HALLWAY	CLOSED & CAPPED		IV		
Q1P17V137A	CHG PUMPS CCW DRN	AUX BLDG 100` - CHARGING PUMP HALLWAY	CLOSED & CAPPED		IV		
Q1P17V023A	CHG PUMPS CCW DRN	AUX BLDG 100` - CHARGING PUMP HALLWAY	CLOSED & CAPPED		IV		
Q1P17V024A	CHG PUMPS CCW DRN	AUX BLDG 100` - CHARGING PUMP HALLWAY BY DOOR 162	CLOSED & CAPPED		IV		
Q1P17V186	1A CHG PUMP CCW INLET DRN	AUX BLDG 100` - CHARGING PUMP HALLWAY	CLOSED & CAPPED		IV		
Q1P17V022A	CHG PUMPS CCW DRN	AUX BLDG 100` - CHARGING PUMP HALLWAY BY DOOR 162	CLOSED & CAPPED		IV		

Step: 2.55 — Aux Bldg 100` - Contaminated Storage Room 172

Equip Operator Id:	Equip Description:	Equip Location:	Required Config:	Actual Config:	Verification:	Initials	
Q1P17V191	CHG PUMP CCW DRN	AUX BLDG 100` - CONTAMINATED STORAGE ROOM 182	CLOSED & CAPPED		IV		

Step: 2.60 — Aux Bldg 121` - Piping Penetration Room

Equip Operator Id:	Equip Description:	Equip Location:	Required Config:	Actual Config:	Verification:	Initials	
Q1P17V167	RCP`S CCW SUPP TEST CONN (PENE 42)	121` PIPING PENETRATION RM	CLOSED & CAPPED		IV		
Q1P17V165	RCP`S OIL CLR CCW RTN LINE VT (PENE 44)	AUX BLDG 121` - PIPING PENETRATION RM	CLOSED & CAPPED		IV		
Q1P17V249A	RCP`S OIL CLR CCW FI-3044 ROOT	AUX BLDG 121` - PIPING PENETRATION RM	OPEN		IV		
Q1P17V249B	RCP`S OIL CLR CCW FI-3044 ROOT	AUX BLDG 121` - PIPING PENETRATION RM	OPEN		IV		
Q1P17V101	RCP`S OIL CLR CCW RTN ISO	AUX BLDG 121` - PIPING PENETRATION RM	OPEN		IV		

Active Procedure: FNP-1-SOP-23.0A, COMPONENT COOLING WATER SYSTEM

Type: SOP, Unit: 1, Revision: 10

Step: 2.60 Aux Bldg 121` - Piping Penetration Room

Equip Operator Id:	Equip Description:	Equip Location:	Required Config:	Actual Config:	Verification:	Initials	
Q1P17V107 Notes: 9	RCP`S THRM BARR CCW RTN ISO (PENE 43)	AUX BLDG 121` - PIPING PENETRATION RM	OPEN		IV		
Q1P17V250A	RCP`S THRM BARR CCW FI-3045 ROOT	AUX BLDG 121` - PIPING PENETRATION RM	OPEN		IV		
Q1P17V250B	RCP`S THRM BARR CCW FI-3045 ROOT	AUX BLDG 121` - PIPING PENETRATION RM	OPEN		IV		
Q1P17V173	RCP`S THRM BARR CCW RTN TEST CONN	AUX BLDG 121` - PIPING PENETRATION RM	CLOSED & CAPPED		IV		
Q1P17V081	EXC LTDN & RCDT HX`S CCW RTN ISO (PENE 46)	AUX BLDG 121` - PIPING PENETRATION RM	OPEN		IV		
Q1P17HV3067-AIR SUPPLY	CCW FROM EXC LTDN/RCDT HX`S	AUX BLDG 121` - PIPING PENETRATION RM	AIR CUT IN		IV		
Q1P17HV3067	CCW FROM EXC LTDN/RCDT HX`S	AUX BLDG 121` - PIPING PENETRATION RM	OPEN		IV		
Q1P17HV3067-JACK Notes: 275	CCW FROM EXC LTDN/RCDT HX`S (HAND JACK DEVICE)	AUX BLDG 121` - PIPING PENETRATION RM	NEUTRAL POSITION & SEALED		IV		
Q1P17HV3095-AIR SUPPLY	CCW TO EXC LTDN/RCDT HX`S	AUX BLDG 121` - PIPING PENETRATION RM	AIR CUT IN		IV		
Q1P17HV3095	CCW TO EXC LTDN/RCDT HX`S (PENE 45)	AUX BLDG 121` - PIPING PENETRATION RM	OPEN		IV		
Q1P17HV3095-JACK Notes: 275	CCW TO EXC LTDN/RCDT HX`S (HAND JACK DEVICE)	AUX BLDG 121` - PIPING PENETRATION RM	NEUTRAL POSITION & SEALED		IV		
Q1P17V160	EXC LTDN & RCDT HX`S CCW RTN LINE TEST CONN	AUX BLDG 121` - PIPING PENETRATION RM	CLOSED, CAPPED & SEALED		IV		
Q1P17V166	EXC LTDN & RCDT HX`S CCW SUPP LINE TEST CONN	AUX BLDG 121` - PIPING PENETRATION RM	CLOSED, CAPPED & SEALED		IV		
Q1P17V164	CCW DISCH RCP OIL CLR TEST CONN	121` PIPING PENETRATION RM	CLOSED, CAPPED & SEALED		IV		
Q1P17V168	RCPS CCW SUPP TEST CONN	121` PIPING PENETRATION RM	CLOSED, CAPPED & SEALED		IV		
Q1P17V161	CCW DISCH EXC LTDN & RCDT HX`S DRN	AUX BLDG 121` - PIPING PENETRATION RM	CLOSED & CAPPED		IV		
Q1P17V251A	EXC LTDN & RCDT HX`S CCW FI-3066 ROOT	AUX BLDG 121` - PIPING PENETRATION RM	OPEN		IV		

Active Procedure: FNP-1-SOP-23.0A, COMPONENT COOLING WATER SYSTEM

Type: SOP, Unit: 1, Revision: 10

Step: 2.60 — Aux Bldg 121` - Piping Penetration Room

Equip Operator Id:	Equip Description:	Equip Location:	Required Config:	Actual Config:	Verification:	Initials	
Q1P17V251B	EXC LTDN & RCDT HX`S CCW FI-3066 ROOT	AUX BLDG 121` - PIPING PENETRATION RM	OPEN		IV		

Step: 2.70 — Aux Bldg 139` - Chemistry Lab (above false ceiling)

Equip Operator Id:	Equip Description:	Equip Location:	Required Config:	Actual Config:	Verification:	Initials	
N1P17V172A	SAMPLE HX CCW FI-3036 ROOT	AUX BLDG 139` - CHEMISTRY LAB (ABOVE FALSE CEILING)	OPEN		IV		
N1P17V172B	SAMPLE HX CCW FI-3036 ROOT	AUX BLDG 139` - CHEMISTRY LAB (ABOVE FALSE CEILING)	OPEN		IV		

Step: 2.80 — Aux Bldg 139` - Control Panel Outside PRF Room

Equip Operator Id:	Equip Description:	Equip Location:	Required Config:	Actual Config:	Verification:	Initials	
Q1P17HV2229-VLV H/S	CCW SUPP TO SAMPLE CLRS	AUX BLDG 139` - CONTROL PANEL OUTSIDE PRF RM	AUTO		IV		
Q1P17HV2229-VLV IND	CCW SUPP TO SAMPLE CLRS	AUX BLDG 139` - CONTROL PANEL OUTSIDE PRF RM	OPEN		IV		
Q1P17HV2229-NORM/BLOCK SW	CCW SUPP TO SAMPLE CLRS (KEY SWITCH)	AUX BLDG 139` - CONTROL PANEL OUTSIDE PRF RM	NORMAL		IV		

Step: 2.90 — Aux Bldg 121` - Waste Evaporator Package Room

Equip Operator Id:	Equip Description:	Equip Location:	Required Config:	Actual Config:	Verification:	Initials	
N1P17V161	TEST CONN	AUX BLDG 121` - WASTE EVAPORATOR PKG RM	CLOSED & CAPPED		IV		
N1P17V063	TEST CONN	AUX BLDG 121` - WASTE EVAPORATOR PKG RM	CLOSED & CAPPED		IV		

Step: 3.00 — Aux Bldg 155` - 1A SFP HX Room

Equip Operator Id:	Equip Description:	Equip Location:	Required Config:	Actual Config:	Verification:	Initials	
Q1P17V014A	1A SFP HX CCW DRN	AUX BLDG 155` - 1A SFP HX RM	CLOSED		IV		
Q1P17V015A	1A SFP HX OUTLET LINE VT	AUX BLDG 155` - 1A SFP HX RM	CLOSED & CAPPED		IV		
Q1P17V228A	1A SFP HX CCW FI-3080A ROOT	AUX BLDG 155` - 1A SFP HX RM	OPEN		IV		

Active Procedure: FNP-1-SOP-23.0A, COMPONENT COOLING WATER SYSTEM

Type: SOP, Unit: 1, Revision: 10

Step: 3.00 Aux Bldg 155` - 1A SFP HX Room

Equip Operator Id:	Equip Description:	Equip Location:	Required Config:	Actual Config:	Verification:	Initials	
Q1P17V228B	1A SFP HX CCW FI-3080A ROOT	AUX BLDG 155` - 1A SFP HX RM	OPEN		IV		
Q1P17V016A Notes: 275	1A SFP HX CCW OUTLET ISO	AUX BLDG 155` - 1A SFP HX RM	14-35 DEG OPEN & SEALED		IV		
Q1P17V011A	CCW TO 1A SFP HX (Q1P17MOV3094A)	AUX BLDG 155` - 1A SFP HX RM	OPEN		IV		

Step: 3.10 Aux Bldg 175` - 1B SFP HX Room

Equip Operator Id:	Equip Description:	Equip Location:	Required Config:	Actual Config:	Verification:	Initials	
Q1P17V015B	1B SFP HX CCW OUTLET LINE VT	AUX BLDG 175` - 1B SFP HX RM	CLOSED & CAPPED		IV		
Q1P17V229A	1B SFP HX CCW FI-3080B ROOT	AUX BLDG 175` - 1B SFP HX RM	OPEN		IV		
Q1P17V229B	1B SFP HX CCW FI-3080B ROOT	AUX BLDG 175` - 1B SFP HX RM	OPEN		IV		

Step: 3.20 Aux Bldg 155` - Corridor Drumming Area

Equip Operator Id:	Equip Description:	Equip Location:	Required Config:	Actual Config:	Verification:	Initials	
Q1P17V014B	1B SFP HX CCW DRN	AUX BLDG 155` - CORRIDOR DRUMMING AREA	CLOSED & CAPPED		IV		
Q1P17V016B Notes: 275	1B SFP HX CCW OUTLET ISO	AUX BLDG 155` - CORRIDOR DRUMMING AREA	14-35 DEG OPEN & SEALED		IV		
Q1P17V011B	CCW TO 1B SFP HX (Q1P17MOV3094B)	AUX BLDG 155` - CORRIDOR DRUMMING AREA	OPEN		IV		

Step: 3.30 CTMT 129` - North Wall

Equip Operator Id:	Equip Description:	Equip Location:	Required Config:	Actual Config:	Verification:	Initials	
Q1P17V162	CCW SUPP LINE TO EXC LTDN/RCDT HXS TEST CONN	CTMT 129` - PENETRATIONS 45 AND 46	CLOSED & CAPPED		IV		
Q1P17HV3443-AIR SUPPLY	CCW FROM EXC LTDN/RCDT HXS	CTMT 129` - PENETRATIONS 45 AND 46	AIR CUT IN		IV		

Active Procedure: FNP-1-SOP-23.0A, COMPONENT COOLING WATER SYSTEM

Type: SOP, Unit: 1, Revision: 10

Step: 3.30 — CTMT 129` - North Wall

Equip Operator Id:	Equip Description:	Equip Location:	Required Config:	Actual Config:	Verification:	Initials	
Q1P17HV3443	CCW FROM EXC LTDN/RCDT HXS	CTMT 129` - PENETRATIONS 45 AND 46	OPEN		IV		
Q1P17HV3443-JACK	CCW FROM EXC LTDN/RCDT HXS (HAND JACK DEVICE)	CTMT 129` - PENETRATIONS 45 AND 46	NEUTRAL POSITION		IV		

Step: 3.40 — CTMT 105`

Equip Operator Id:	Equip Description:	Equip Location:	Required Config:	Actual Config:	Verification:	Initials	
Q1P17V079	RCDT HX CCW INLET ISO	CTMT 105`	OPEN		IV		
Q1P17V080 Notes: 275	RCDT HX CCW OUTLET ISO	CTMT 105`	4 1/8 TURNS OPEN & SEALED		IV		
Q1P17V130	RCDT HX CCW INLET LINE DRN	CTMT 105`	CLOSED & CAPPED		IV		
Q1P17V257	RCDT HX CCW DRN	CTMT 105`	CLOSED & CAPPED		IV		
Q1P17V129	RCDT HX CCW VT	CTMT 105`	CLOSED & CAPPED		IV		
Q1P17V174	RCDT HX CCW OUTLET LINE TEST CONN	CTMT 129' NEAR PENE 25	CLOSED & CAPPED		IV		

Step: 3.50 — Aux Bldg 100` - CCW Hx Room

Equip Operator Id:	Equip Description:	Equip Location:	Required Config:	Actual Config:	Verification:	Initials	
Q1P17V221A	1A CCW PUMP SUCT PI-3308A ROOT	AUX BLDG 100` - CCW HX RM	OPEN		IV		
Q1P17V109A	1A CCW PUMP SUCT	AUX BLDG 100` - CCW HX RM	OPEN		IV		
Q1P17V279A 12.1.	1A CCW PUMP SUCT LINE VT	AUX BLDG 100` - CCW HX RM	CLOSED & CAPPED		IV		
Q1P17V156A	1A CCW PUMP VT	AUX BLDG 100` - CCW HX RM	CLOSED & CAPPED		IV		
Q1P17V156D	1A CCW PUMP VT	AUX BLDG 100` - CCW HX RM	CLOSED & CAPPED		IV		
Q1P17V157A	1A CCW PUMP DRN	AUX BLDG 100` - CCW HX RM	CLOSED & CAPPED		IV		
Q1P17V157B	1A CCW PUMP DRN	AUX BLDG 100` - CCW HX RM	CLOSED & CAPPED		IV		

Active Procedure: FNP-1-SOP-23.0A, COMPONENT COOLING WATER SYSTEM

Type: SOP, Unit: 1, Revision: 10

Step: 3.50 Aux Bldg 100` - CCW Hx Room

Equip Operator Id:	Equip Description:	Equip Location:	Required Config:	Actual Config:	Verification:	Initials	
Q1P17V144A	1A CCW PUMP MINI-FLOW	AUX BLDG 100` - CCW HX RM	OPEN		IV		
Q1P17V278A	1A CCW PUMP CHEM MIXING ISO	AUX BLDG 100` - CCW HX RM	CLOSED		IV		
Q1P17V210	1A CCW PUMP MINI-FLOW VT	AUX BLDG 100` - CCW HX RM	CLOSED & CAPPED		IV		
Q1P17V258A	1A CCW PUMP REL HDR DRN	AUX BLDG 100` - CCW HX RM	CLOSED & CAPPED		IV		
Q1P17V222A	1A CCW PUMP DISCH PI-3035A ROOT	AUX BLDG 100` - CCW HX RM	OPEN		IV		
Q1P17V281A	1A CCW PUMP DISCH HDR DRN	AUX BLDG 100` - CCW HX RM	CLOSED & CAPPED		IV		
Q1P17V002A	1A CCW PUMP DISCH ISO	AUX BLDG 100` - CCW HX RM	OPEN		IV		
Q1P17V109B	1B CCW PUMP SUCT	AUX BLDG 100` - CCW HX RM	OPEN		IV		
Q1P17V279B	1B CCW PUMP SUCT LINE VT	AUX BLDG 100` - CCW HX RM	CLOSED & CAPPED		IV		
Q1P17V221B	1B CCW PUMP SUCT PI-3308B ROOT	AUX BLDG 100` - CCW HX RM	OPEN		IV		
Q1P17V156B	1B CCW PUMP VT	AUX BLDG 100` - CCW HX RM	CLOSED & CAPPED		IV		
Q1P17V156E	1B CCW PUMP VT	AUX BLDG 100` - CCW HX RM	CLOSED & CAPPED		IV		
Q1P17V157C	1B CCW PUMP DRN	AUX BLDG 100` - CCW HX RM	CLOSED & CAPPED		IV		
Q1P17V157D	1B CCW PUMP DRN	AUX BLDG 100` - CCW HX RM	CLOSED & CAPPED		IV		
Q1P17V144B	1B CCW PUMP MINI-FLOW	AUX BLDG 100` - CCW HX RM	OPEN		IV		
Q1P17V278B	1B CCW PUMP CHEM MIXING ISO	AUX BLDG 100` - CCW HX RM	CLOSED		IV		
Q1P17V178	1B CCW PUMP MINI-FLOW VT	AUX BLDG 100` - CCW HX RM	CLOSED & CAPPED		IV		
Q1P17V258B 12:1	1B CCW PUMP REL HDR DRN	100 FT UNIT 1 AUX BLDG SOUTH CCW HX RM 185 BY 1B CCW PUMP	CLOSED & CAPPED		IV		

Active Procedure: FNP-1-SOP-23.0A, COMPONENT COOLING WATER SYSTEM

Type: SOP, Unit: 1, Revision: 10

Step: 3.50 Aux Bldg 100` - CCW Hx Room

Equip Operator Id:	Equip Description:	Equip Location:	Required Config:	Actual Config:	Verification:	Initials	
Q1P17V281B	1B CCW PUMP DISCH HDR DRN	AUX BLDG 100` - CCW HX RM	CLOSED & CAPPED		IV		
Q1P17V222B	1B CCW PUMP DISCH PI-3035B ROOT	AUX BLDG 100` - CCW HX RM	OPEN		IV		
Q1P17V002B	1B CCW PUMP DISCH ISO	AUX BLDG 100` - CCW HX RM	OPEN		IV		
Q1P17V109C	1C CCW PUMP SUCT ISO	AUX BLDG 100` - CCW HX RM	OPEN		IV		
Q1P17V279C	1C CCW PUMP SUCT LINE VT	AUX BLDG 100` - CCW HX RM	CLOSED & CAPPED		IV		
Q1P17V221C	1C CCW PUMP SUCT PI-3308C ROOT	AUX BLDG 100` - CCW HX RM	OPEN		IV		
Q1P17V156C	1C CCW PUMP VT	AUX BLDG 100` - CCW HX RM	CLOSED & CAPPED		IV		
Q1P17V156F	1C CCW PUMP VT	AUX BLDG 100` - CCW HX RM	CLOSED & CAPPED		IV		
Q1P17V157E	1C CCW PUMP DRN	AUX BLDG 100` - CCW HX RM	CLOSED & CAPPED		IV		
Q1P17V157F	1C CCW PUMP DRN	AUX BLDG 100` - CCW HX RM	CLOSED & CAPPED		IV		
Q1P17V144C	1C CCW PUMP MINI-FLOW	AUX BLDG 100` - CCW HX RM	OPEN		IV		
Q1P17V179	1C CCW PUMP MINI-FLOW VT	AUX BLDG 100` - CCW HX RM	CLOSED & CAPPED		IV		
Q1P17V278C	1C CCW PUMP CHEM MIXING ISO	AUX BLDG 100` - CCW HX RM	CLOSED		IV		
Q1P17V258C	1C CCW PUMP REL HDR DRN	AUX BLDG 100` - CCW HX RM	CLOSED & CAPPED		IV		
Q1P17V222C	1C CCW PUMP DISCH PI-3035C ROOT	AUX BLDG 100` - CCW HX RM	OPEN		IV		
Q1P17V002C	1C CCW PUMP DISCH ISO	AUX BLDG 100` - CCW HX RM	OPEN		IV		
Q1P17V110A Notes: 9	CCW FROM 1B RHR HX	AUX BLDG 100` - CCW HX RM	OPEN		IV		
Q1P17V017A	CCW FROM 1A SFP HX AND CHG PUMPS	AUX BLDG 100` - CCW HX RM	OPEN		IV		

Active Procedure: FNP-1-SOP-23.0A, COMPONENT COOLING WATER SYSTEM

Type: SOP, Unit: 1, Revision: 10

Step: 3.50 Aux Bldg 100` - CCW Hx Room

Equip Operator Id:	Equip Description:	Equip Location:	Required Config:	Actual Config:	Verification:	Initials	
Q1P17V110B Notes: 9, 290	CCW PUMPS SUCT HDR XCONN	AUX BLDG 100` - CCW HX RM	CLOSED		IV		
Q1P17V110C Notes: 9, 290	CCW PUMPS SUCT HDR XCONN	AUX BLDG 100` - CCW HX RM	CLOSED		IV		
Q1P17V110D Notes: 9, 290	CCW PUMPS SUCT HDR XCONN	AUX BLDG 100` - CCW HX RM	OPEN		IV		
Q1P17V110E Notes: 9, 290	CCW PUMPS SUCT HDR XCONN	AUX BLDG 100` - CCW HX RM	OPEN		IV		
Q1P17V017B	CCW FROM 1B SFP HX AND CHG PUMPS	AUX BLDG 100` - CCW HX RM	OPEN		IV		
Q1P17V281C	1C CCW PUMP DISCH HDR DRN	AUX BLDG 100` - CCW HX RM	CLOSED & CAPPED		IV		
Q1P17V110F	CCW FROM 1A RHR HX	AUX BLDG 100` - CCW HX RM	OPEN		IV		
Q1P17V004A	CCW INLET TO 1A CCW HX	AUX BLDG 100` - CCW HX RM	OPEN		IV		
Q1P17V003A Notes: 9, 291	CCW PUMPS DISCH HDR XCONN	AUX BLDG 100` - CCW HX RM	CLOSED		IV		
Q1P17V003B Notes: 9, 291	CCW PUMPS DISCH HDR XCONN	AUX BLDG 100` - CCW HX RM	CLOSED		IV		
Q1P17V004B	CCW INLET TO 1B CCW HX	AUX BLDG 100` - CCW HX RM	OPEN		IV		
Q1P17V003C Notes: 9, 291	CCW PUMPS DISCH HDR XCONN	AUX BLDG 100` - CCW HX RM	OPEN		IV		
Q1P17V003D Notes: 9, 291	CCW PUMPS DISCH HDR XCONN	AUX BLDG 100` - CCW HX RM	OPEN		IV		
Q1P17V004C	CCW INLET TO 1C CCW HX	AUX BLDG 100` - CCW HX RM	OPEN		IV		

Active Procedure: FNP-1-SOP-23.0A, COMPONENT COOLING WATER SYSTEM

Type: SOP, Unit: 1, Revision: 10

Step: 3.50 Aux Bldg 100` - CCW Hx Room

Equip Operator Id:	Equip Description:	Equip Location:	Required Config:	Actual Config:	Verification:	Initials	
Q1P17V223A	1A CCW HX CCW INLET FT-3043A ROOT	AUX BLDG 100` - CCW HX RM	OPEN		IV		
Q1P17V223B	1A CCW HX CCW INLET FT-3043A ROOT	AUX BLDG 100` - CCW HX RM	OPEN		IV		
Q1P17V177	1A CCW HX CCW INLET VT	AUX BLDG 100` - CCW HX RM	CLOSED & CAPPED		IV		
Q1P17V226A	1A CCW HX CCW INLET PI-3038A ROOT	AUX BLDG 100` - CCW HX RM	OPEN		IV		
Q1P17V005A	1A CCW HX CCW DRN	AUX BLDG 100` - CCW HX RM	CLOSED & CAPPED		IV		
Q1P17V007A	1A CCW HX CCW VT	AUX BLDG 100` - CCW HX RM	CLOSED & CAPPED		IV		
Q1P17V005B	1A CCW HX CCW DRN	AUX BLDG 100` - CCW HX RM	CLOSED & CAPPED		IV		
Q1P17V227A	1A CCW HX CCW OUTLET PI-3041A ROOT	AUX BLDG 100` - CCW HX RM	OPEN		IV		
Q1P17V008A Notes: 292	1A CCW HX CCW OUTLET ISO	AUX BLDG 100` - CCW HX RM	OPEN		IV		
Q1P17V010A	B TRN CCW SUPP ISO	AUX BLDG 100` - CCW HX RM	OPEN		IV		
Q1P17V009A Notes: 9, 291	CCW SUPP HDR XCONN	AUX BLDG 100` - CCW HX RM	CLOSED		IV		
Q1P17V012A	CCW SUPP TO 1A SFP HX AND CHG PUMPS	AUX BLDG 100` - CCW HX RM	OPEN		IV		
Q1P17V224A	1B CCW HX CCW INLET FT-3043B ROOT	AUX BLDG 100` - CCW HX RM	OPEN		IV		
Q1P17V224B	1B CCW HX CCW INLET FT-3043B ROOT	AUX BLDG 100` - CCW HX RM	OPEN		IV		
Q1P17V180	1B CCW HX CCW INLET VT	AUX BLDG 100` - CCW HX RM	CLOSED & CAPPED		IV		
Q1P17V226B	1B CCW HX CCW INLET PI-3038B ROOT	AUX BLDG 100` - CCW HX RM	OPEN		IV		
Q1P17V005C	1B CCW HX CCW DRN	AUX BLDG 100` - CCW HX RM	CLOSED & CAPPED		IV		

Active Procedure: FNP-1-SOP-23.0A, COMPONENT COOLING WATER SYSTEM

Type: SOP, Unit: 1, Revision: 10

Step: 3.50 Aux Bldg 100` - CCW Hx Room

Equip Operator Id:	Equip Description:	Equip Location:	Required Config:	Actual Config:	Verification:	Initials	
Q1P17V007B	1B CCW HX CCW VT	AUX BLDG 100` - CCW HX RM	CLOSED & CAPPED		IV		
Q1P17V005D	1B CCW HX CCW DRN	AUX BLDG 100` - CCW HX RM	CLOSED & CAPPED		IV		
Q1P17V227B	1B CCW HX CCW OUTLET PI-3041B ROOT	AUX BLDG 100` - CCW HX RM	OPEN		IV		
Q1P17V008B Notes: 293	1B CCW HX CCW OUTLET ISO	AUX BLDG 100` - CCW HX RM	CLOSED		IV		
Q1P17V009B Notes: 9, 291	CCW SUPP HDR XCONN	AUX BLDG 100` - CCW HX RM	CLOSED		IV		
Q1P17V009C Notes: 9, 291	CCW SUPP HDR XCONN	AUX BLDG 100` - CCW HX RM	OPEN		IV		
Q1P17V181	1C CCW HX CCW INLET VT	AUX BLDG 100` - CCW HX RM	CLOSED & CAPPED		IV		
Q1P17V225A	1C CCW HX CCW INLET FI-3043C ROOT	AUX BLDG 100` - CCW HX RM	OPEN		IV		
Q1P17V225B	1C CCW HX CCW INLET FI-3043C ROOT	AUX BLDG 100` - CCW HX RM	OPEN		IV		
Q1P17V226C	1C CCW HX CCW INLET PI-3038C ROOT	AUX BLDG 100` - CCW HX RM	OPEN		IV		
Q1P17V005E	1C CCW HX CCW DRN	AUX BLDG 100` - CCW HX RM	CLOSED & CAPPED		IV		
Q1P17V007C	1C CCW HX CCW VT	AUX BLDG 100` - CCW HX RM	CLOSED & CAPPED		IV		
Q1P17V005F	1C CCW HX CCW DRN	AUX BLDG 100` - CCW HX RM	CLOSED & CAPPED		IV		
Q1P17V227C	1C CCW HX CCW OUTLET PI-3041C ROOT	AUX BLDG 100` - CCW HX RM	OPEN		IV		
Q1P17V008C Notes: 294	1C CCW HX CCW OUTLET ISO	AUX BLDG 100` - CCW HX RM	OPEN		IV		
Q1P17V009D Notes: 9, 291	CCW SUPP HDR XCONN	AUX BLDG 100` - CCW HX RM	OPEN		IV		

12:1

Active Procedure: FNP-1-SOP-23.0A, COMPONENT COOLING WATER SYSTEM

Type: SOP, Unit: 1, Revision: 10

Step: 3.50 Aux Bldg 100` - CCW Hx Room

Equip Operator Id:	Equip Description:	Equip Location:	Required Config:	Actual Config:	Verification:	Initials	
Q1P17V010B	A TRN CCW SUPP ISO	AUX BLDG 100` - CCW HX RM	OPEN		IV		
Q1P17V012B	CCW SUPP TO 1B SFP HX AND CHG PUMPS	AUX BLDG 100` - CCW HX RM	OPEN		IV		
Q1P17V116	CCW SRG TK A TRN MKUP ISO	AUX BLDG 100` - CCW HX RM	OPEN		IV		
Q1P17V120	CCW SRG TK B TRN MKUP ISO	AUX BLDG 100` - CCW HX RM	OPEN		IV		
Q1P17V175	CCW SRG TK A TRN MKUP LINE DRN	AUX BLDG 100` - CCW HX RM	CLOSED & CAPPED		IV		
Q1P17V176	CCW SRG TK B TRN MKUP LINE DRN	AUX BLDG 100` - CCW HX RM	CLOSED & CAPPED		IV		
N1P11V045	CCW SRG TK DEMIN INLET ISO	AUX BLDG 100` - CCW HX RM	OPEN		IV		
Q1P17V030	CCW TO SEC HXS (Q1P17MOV3047)	AUX BLDG 100` - CCW HX RM	OPEN		IV		
Q1P17V117A	MKUP TO CCW FROM RMW (Q1P17MOV3031A)	AUX BLDG 100` - CCW HX RM	CLOSED		IV		
Q1P17V121A	MKUP TO CCW FROM DW STOR TK (Q1P17MOV3030A)	AUX BLDG 100` - CCW HX RM	CLOSED		IV		
Q1P17V117B	MKUP TO CCW FROM RMW (Q1P17MOV3031B)	AUX BLDG 100` - CCW HX RM	CLOSED		IV		
Q1P17V121B	MKUP TO CCW FROM DW STOR TK (Q1P17MOV3030B)	AUX BLDG 100` - CCW HX RM	CLOSED		IV		

Step: 3.60 Aux Bldg 175` - CCW Surge Tank Room

Equip Operator Id:	Equip Description:	Equip Location:	Required Config:	Actual Config:	Verification:	Initials	Date
N1P17V179	CCW SRG TK DW HOSE CONN	AUX BLDG 175` - CCW SURGE TANK RM	CLOSED & CAPPED		IV		
Q1P17V113A	CCW SRG TK A TRN DRN	AUX BLDG 175` - CCW SURGE TANK RM	CLOSED		IV		
Q1P17V113B	CCW SRG TK B TRN DRN	AUX BLDG 175` - CCW SURGE TANK RM	CLOSED & CAPPED		IV		
Q1P17V112A	CCW SRG TK LI-3027B&D ROOT	AUX BLDG 175` - CCW SURGE TANK RM	OPEN		IV		
Q1P17V112B	CCW SRG TK LI-3027B&D ROOT	AUX BLDG 175` - CCW SURGE TANK RM	OPEN		IV		

Active Procedure: FNP-1-SOP-23.0A, COMPONENT COOLING WATER SYSTEM

Type: SOP, Unit: 1, Revision: 10

Step: 3.60 — Aux Bldg 175` - CCW Surge Tank Room

Equip Operator Id:	Equip Description:	Equip Location:	Required Config:	Actual Config:	Verification:	Initials	
Q1P17V112C	CCW SRG TK LI-3027A&C ROOT	AUX BLDG 175` - CCW SURGE TANK RM	OPEN		IV		
Q1P17V112D	CCW SRG TK LI-3027A&C ROOT	AUX BLDG 175` - CCW SURGE TANK RM	OPEN		IV		
Q1P17V114	CCW SRG TK CHEM ADD	AUX BLDG 175` - CCW SURGE TANK RM	CLOSED & CAPPED		IV		
Q1P17RV3028-AIR SUPPLY	CCW SRG TK AIR VT	AUX BLDG 175` - CCW SURGE TANK RM	AIR CUT IN		IV		
Q1P17RV3028	CCW SRG TK AIR VT	AUX BLDG 175` - CCW SURGE TANK RM	OPEN		IV		
Q1P17RV3028-JACK	CCW SRG TK AIR VT (HAND JACK DEVICE)	AUX BLDG 175` - CCW SURGE TANK RM	NEUTRAL POSITION		IV		
Q1P17V285A	CCW SRG TK LI-3027A UPPER ROOT	AUX BLDG 175` - CCW SURGE TANK RM	OPEN		IV		
Q1P17V285B	CCW SRG TK LI-3027B UPPER ROOT	AUX BLDG 175` - CCW SURGE TANK RM	OPEN		IV		
Q1P17V285C 12.1	CCW SRG TK LI-3027C UPPER ROOT	AUX BLDG 175` - CCW SURGE TANK RM	OPEN		IV		Page
Q1P17V285D	CCW SRG TK LI-3027D UPPER ROOT	AUX BLDG 175` - CCW SURGE TANK RM	OPEN		IV		

Step: 3.70 — Main Control Board

Equip Operator Id:	Equip Description:	Equip Location:	Required Config:	Actual Config:	Verification:	Initials	
Q1P17RV3028-MCB H/S	CCW SRG TK VT	MAIN CONTROL BOARD	OPEN		IV		
Q1P17HV3096B&A-MCB H/S	CCW TO/FROM EVAP PKGS & H2 RECOMB Q1P17HV3096B&A	U1 MCB	OPEN / AUTO		IV		
Q1P17MOV3185A-MCB H/S Notes: 345	CCW TO 1A RHR HX Q1P17MOV3185A FU-E3	U1 MCB	CLOSE / MID POS.		IV		
Q1P17MOV3185B-MCB H/S Notes: 345	CCW TO 1B RHR HX Q1P17MOV3185B FV-U4	U1 MCB	CLOSE / MID POS.		IV		
Q1P17MOV3094A-MCB H/S	CCW TO 1A SFP HX Q1P17MOV3094A FV-D3	U1 MCB	OPEN / MID POS.		IV		
Q1P17MOV3094B-MCB H/S	CCW TO 1B SFP HX Q1P17MOV3094B FU-S4	U1 MCB	OPEN / MID POS.		IV		

Active Procedure: FNP-1-SOP-23.0A, COMPONENT COOLING WATER SYSTEM

Type: SOP, Unit: 1, Revision: 10

Step: 3.70 Main Control Board

Equip Operator Id:	Equip Description:	Equip Location:	Required Config:	Actual Config:	Verification:	Initials	
Q1P17MOV3047-MCB H/S	CCW TO SECONDARY HXS Q1P17MOV3047 FV-D2	U1 MCB	OPEN / AUTO		IV		
Q1P17MOV3031A-MCB H/S	MKUP TO CCW FROM RMW Q1P17MOV3031A FU-D4	U1 MCB	CLOSE / MID POS.		IV		
Q1P17MOV3030A-MCB H/S	MKUP TO CCW FROM DW STOR TK Q1P17MOV3030A FU-I3	U1 MCB	CLOSE / MID POS.		IV		
Q1P17MOV3031B-MCB H/S	MKUP TO CCW FROM RMW Q1P17MOV3031B FV-G5	U1 MCB	CLOSE / MID POS.		IV		
Q1P17MOV3030B-MCB H/S	MKUP TO CCW FROM DW STOR TK Q1P17MOV3030B FV-G4	U1 MCB	CLOSE / MID POS.		IV		
Q1P17HV3067-MCB H/S	CCW FROM EXC LTDN/RCDT HXS Q1P17HV3067	U1 MCB	OPEN / AUTO		IV		
Q1P17HV3443-MCB H/S	CCW FROM EXC LTDN/RCDT HXS Q1P17HV3443	U1 MCB	OPEN / AUTO		IV		
Q1P17HV3095-MCB H/S	CCW TO EXC LTDN/RCDT HXS Q1P17HV3095	U1 MCB	OPEN / AUTO		IV		

Note #	Note Text:
9	For outage return to service, coordinate with SS and stroke vlv a minimum of 1 turn. Submit CR for problems.
76	Alternate DC control power located in Hot Shutdown Panel.
77	Only the BKR for the TRN that the pump is aligned to will be racked in. The other BKR will be racked out.
275	Set for CCW flow balance. S/S permission needed prior to changing the position of this seal wired valve.
289	as shown on FI-3036
290	May be in opposite position if 1B CCW pump aligned to B train.
291	May be in opposite position if miscellaneous header on B train.
292	May be in opposite position if 1B CCW Hx on service and aligned to B Train.
293	May be in opposite position if 1B CCW Hx on service and aligned to either A Train or B Train.
294	May be in opposite position if 1B CCW Hx on service and aligned to A Train.
345	May be open if RHR system on service or if CCW pump on associated train not running.
391	Disc switch Q1R18A0004A space heater power supply bkr is N1R19L001J-BKR11.
392	Disc switch Q1R18A0004B space heater power supply bkr is N1R19L001J-BKR13.
579	Disconnect is required to be Closed when component is aligned to A Train. Disconnect is required to be Open when component is aligned to B Train.
580	Disconnect is required to be Closed when component is aligned to B Train. Disconnect is required to be Open when component is aligned to A Train.

A3.1.A RO and SRO Radiation Control ADMIN G2.3.4

TITLE: **DETERMINE DRESSOUT REQUIREMENTS, TOTAL PROJECTED DOSE AND DETERMINE IF A RCP OIL ADDITION CAN BE PERFORMED WITHOUT EXCEEDING ANY RADIOLOGICAL LIMITS.**

EVALUATION LOCATION: ☐ SIMULATOR ☐CONTROL ROOM ☒CLASSROOM

PROJECTED TIME: 20 MIN SIMULATOR IC NUMBER: N/A

☐ ALTERNATE PATH ☐ TIME CRITICAL ☐ PRA

JPM DIRECTIONS:

1. Initiation of task may be in group setting, evaluation performed individually upon completion.
2. Requiring the examinee to acquire the required materials may or may not be included as part of the JPM.

TASK STANDARD: Upon successful completion of this JPM, the examinee will review an RWP, Radiological Survey Map and perform the following for adding oil to the 2A RCP:

- Identify the Protective Clothing requirements.
- Total projected dose for a job.
- Determination if the task can or cannot be performed without exceeding any radiological limits on a single entry, and if NOT then state the reason.

Examinee:		
Overall JPM Performance:	**Satisfactory** ☐	**Unsatisfactory** ☐
Evaluator Comments (attach additional sheets if necessary)		

EXAMINER: _____

Developer	Billy Thornton	Date: 2/9/2011
NRC Approval	SEE NUREG 1021 FORM ES-301-3	

CONDITIONS

When I tell you to begin, you are to **DETERMINE DRESSOUT REQUIREMENTS, TOTAL PROJECTED DOSE AND DETERMINE IF A RCP OIL ADDITION CAN BE PERFORMED WITHOUT EXCEEDING ANY RADIOLOGICAL LIMITS**. The conditions under which this task is to be performed are:

1. Rx Power is 10%.
2. You will be adding oil to the 2A RCP.
3. All needed tools, oil, and equipment have been staged at 2A RCP.
4. All necessary permissions to access the area and perform the task have been acquired.
5. Your accumulated dose for this year to date is 1650 mRem.
6. Based on previous actions to stage the materials for the job, the TOTAL round-trip TRANSIT dose will be 10 mRem.
7. The TOTAL time at the JOB site will be 30 minutes.
8. The Job will be completed by one team on one entry.
9. ASSUME NEUTRON DOSE Exposure NEGLIGABLE.
10. Using the RWP 11-9490 and the Survey Map of the 2A RCP work area provided, you are to determine and document your conclusions on the table below the following information:
    a. Your Protective Clothing requirements.
    b. Total projected dose from gamma.
    c. If you can or cannot perform the task without exceeding any limits, if not, then state the reason.

INITIATING CUE: **"IF you have no questions, you may begin."**

EVALUATION CHECKLIST

ELEMENTS:	STANDARDS:	RESULTS: (CIRCLE)
_____ START TIME		

EVALUATION CHECKLIST

ELEMENTS:	STANDARDS:	RESULTS: (CIRCLE)
* 1. Determines dressout requirements.	References the RWP and determines dressout is dependent upon the contamination levels. Reviews the survey map and **identifies that the contamination levels are <50,000 dpm/100cm2** **Documents** the following dressout requirements: **"Single coveralls or equivalent, booties, one set rubber shoe-covers, and one set of gloves."**	S / U
* 2. Calculates total projected dose.	Reviews the survey map and **identifies that the General Area dose rate for the job site is 390 mR/hr.** Calculates dose received while performing the job**, and adds the dose received during transit** to and from the job. **Documents the total of 205 mRem**	S / U

Total dose calculation: **Dose at jobsite + Dose in transit = Total dose**

30 minutes * 390 mRem/ hr * 1 hr/60 minutes = **195 mRem (dose at jobsite) {no range}**

Dose during transit is given in the Conditions = **10 mRem total {no range}**

195 mRem (dose at jobsite) + 10 mRem (dose during transit) = **205 mRem Total dose {no range}**

EVALUATION CHECKLIST

ELEMENTS:	STANDARDS:	RESULTS: (CIRCLE)
* 3. Determine if any dose limits will be exceeded by performing the task.	Determines if allowable dose limits will be exceed: — Admin dose limit o 1855 mR < 2000 mR. — **RWP Task dose limit** o **205 mR > 200 mR** — RWP Task dose rate limit o 390 mR/hr < 500 mR/hr **Documents** that the job can **NOT** be performed.	S / U

ANNUAL limit (2000 mR annually): 1650 accumulated) + 205 = 1855 mR {no range}

205 mR – 200mr from RWP = 5 mR **over the RWP accumulated dose limit. {no range}**

* 4. States the reason for the task as NOT permitted	IDENTIFIES that the **RWP Task dose limit is exceeded.** ***RWP task Dose limit 200 mR is exceeded by 5 mR*** Alternatively, one might state that there is insufficient exposure margin (350 mr). IF this is cited as the reason, **follow-up CUE:** "Can an individual with NO year to date DOSE perform the task?" **IF NO, then CUE**: "Why not?"	S / U

_____ STOP TIME

Terminate when all elements of the task have been completed.

CRITICAL ELEMENTS: Critical Elements are denoted with an asterisk (*) before the element number.

GENERAL REFERENCES:

1. FNP-0-M-001, VER 18.0
2. KA: G2.3.4 RO 3.2 SRO 3.7
   G2.3.7 RO 3.5 SRO 3.6

GENERAL TOOLS AND EQUIPMENT:

Calculator
Containment Survey Maps – 1 maps (2A RCP cubicle)
Containment RWP 11-9490 (For Training USE ONLY)
Health Physics Manual, FNP-0-M-001, Version 18.0.

Critical ELEMENT justification:

STEP	Evaluation
1.	**Critical:** Task completion: required to determine dress out requirements for performing work in Containment, from the Radiation Work Permit.
2.	**Critical:** Task completion: required to determine dose rates from HP survey map and required to perform calculation to determine the total projected dose.
3.	**Critical:** Task completion: required to determine if any dose limits will be exceeded and finds out the task can NOT be done within limits.
4.	**Critical:** Task completion: required to identify which limit is exceeded. This is an evaluation mechanism to objectively asses the REASON for NOT permitting task completion.

KEY

HIGEST Dose Rates encountered at the work location	
Dressout requirements:	*Standard Coveralls: **Single coveralls or equivalent, hood, booties, one set rubber shoe-covers, and one set of gloves.**
Total projected dose from gamma	***205 mRem {no range}**
Can you complete this task without exceeding any limits?	**(CIRCLE ONE)** YES *NO
REASON, if applicable:	*RWP task Dose limit 200 mR

CONDITIONS

When I tell you to begin, you are to **DETERMINE DRESSOUT REQUIREMENTS, TOTAL PROJECTED DOSE AND DETERMINE IF A RCP OIL ADDITION CAN BE PERFORMED WITHOUT EXCEEDING ANY RADIOLOGICAL LIMITS**. The conditions under which this task is to be performed are:

1. Rx Power is 10%.
2. You will be adding oil to the 2A RCP.
3. All needed tools, oil, and equipment have been staged at 2A RCP.
4. All necessary permissions to access the area and perform the task have been acquired.
5. Your accumulated dose for this year to date is 1650 mRem.
6. Based on previous actions to stage the materials for the job, the TOTAL round-trip TRANSIT dose will be 10 mRem.
7. The TOTAL time at the JOB site will be 30 minutes.
8. The Job will be completed by one team on one entry.
9. ASSUME NEUTRON DOSE Exposure NEGLIGABLE.
10. Using the RWP 11-9490 and the Survey Map of the 2A RCP work area provided, you are to determine and document your conclusions on the table below the following information:
    a. Your Protective Clothing requirements.
    b. Total projected dose from gamma.
    c. If you can or cannot perform the task without exceeding any limits, if not, then state the reason.

HIGEST Dose Rates encountered at the work location	
Dressout requirements:	
Total projected dose from gamma	
Can you complete this task without exceeding any limits?	**(CIRCLE ONE)** YES NO
REASON, if applicable:	

Radiation Work Permit	Plant Farley **11-9490** **FOR TRAINING USE ONLY**	Rev 1	UNIT 2

Job Description	Activities by Operations in support of the U2 EMERGENT CONTAINMENT ENTRY to include work in High Radiation Areas and other work classified as "Medium Risk" INSIDE THE BIOWALL. CAUTION: This RWP cannot be used for entries into Alpha Level 3 Areas.
Location	U2 CONTAINMENT

HP Coverage	Authorization	Briefing
CONTINUOUS	INDIVIDUAL	INDIVIDUAL

Start Date	5/1/2011 12:00 AM	End Date	6/1/2011 11:59 PM
Job Supv.	G. Ohmstede	EXT	4758

Radiological Conditions

AIRBORNE LEVELS: LESS THAN 4 DAC HOURS PER ENTRY

CONTAMINATION: < 500,000 DPM/100CM2 BETA GAMMA, LESS THAN ALPHA LEVEL 3

RAD LEVELS: LESS < 1.0 REM/HR

Dosimetry

TLD and DAD

Protective Clothing Requirements

AS NOTED IN INSTRUCTIONS BELOW

Respirators

NOT REQUIRED/NOT ALLOWED

TASKS

Description	DAD Alarms Dose (mr)	DAD Alarms Rate(mr/h)
CTMT ACTIVITIES (NON HIGH RAD AREAS)	50	100
CTMT ACTIVITIES (HIGH RAD AREAS)	200	500

INSTRUCTIONS

This RWP involves work identified as Radiologically Risk Significant activities.

No entries allowed inside the 105' Missile Barrier >15% Power. Entry inside the 105' Missile Barrier following Rx Trip and/or at a Power levels of 15% or less requires the prior approval of both the ED and the Health Physics Supervisor.

All workers must receive an Initial RWP Briefing prior to using this RWP for the FIRST time.

Prior to commencing work, individuals will receive a High Rad briefing for every posted High Radiation Area to be entered.

DAD alarm values may be adjusted by a SNC HP ANSI 3.1 or higher qualified individual based on expected conditions but can not exceed the limits listed for this RWP, and requires Health Physics Supervisor's permission.

When exposure on this RWP is expected to be <5 Rem/hr Whole Body and/or <500 mRem/Worker/entry, then Stay time Calculation Sheets are not required. Stay times will be controlled by DADs and Neutron exposure limits.

The HP Technician providing job coverage shall ensure Neutron calculation worksheets (DOS form 933) are completed for entries made in a Neutron Radiation area.

Prior to entry ensure each worker has an adequate exposure margin. Account for any accumulated Neutron Exposure.

Prior to exceeding the Accumulated Dose Alarm, worker(s) shall exit the RCA. Upon receipt of the Dose Rate Alarm, back out of the area until the alarm clears & contact Health Physics.

The HP Technician is responsible for monitoring Neutron Dose rates and exposure. The HP Technician shall periodically inform the workers of their Neutron exposure and have the group exit the area prior to reaching 90 mRem Neutron. Maximum Neutron Dose Rate is 450 mrem/hour.

Dressout requirements for areas > 50,000 dpm/100cm2 beta/gamma: Double coveralls or equivalent, hood, booties,two sets rubber shoecovers, and two sets of gloves.

Dressout requirements for areas ≤ 50,000 dpm/100cm2 beta/gamma: Single coveralls or equivalent, hood, booties, one set rubber shoecovers, and one set of gloves.

FOR TRAINING USE ONLY

Prepared	NRC EXAM TEAM	APPROVED	5/1/2011 12:00:00 AM **by NRC EXAM WRITER**

U2 A rcp bay (2CB129) Survey #HLT-30 - 10/01/2006 20:34 - Farley

Dose Rate - Gamma Contact (mrem/hr) / Dose Rate - Gamma G/A (mrem/hr)

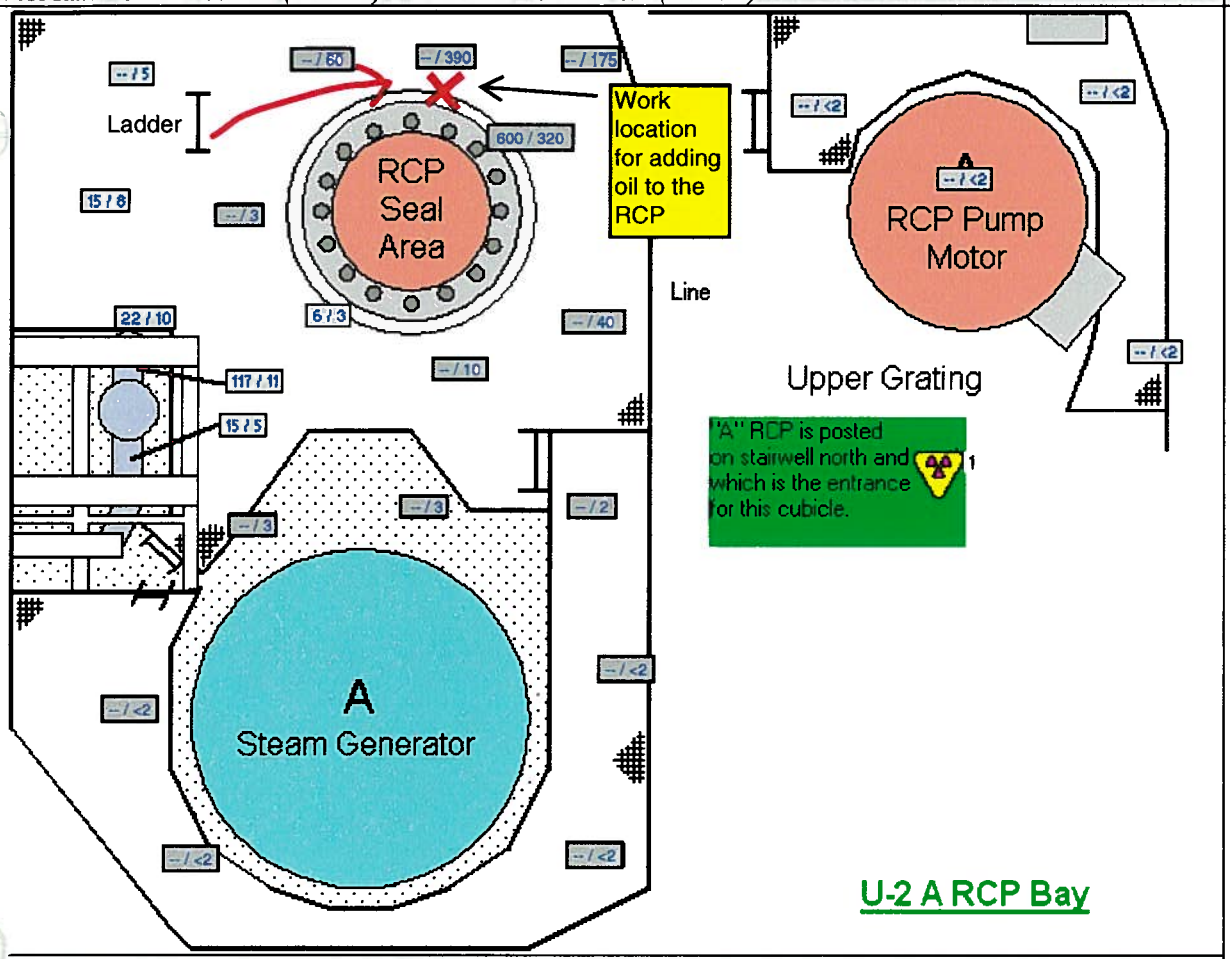

Posting Info

1)
-RWP required for entry
-HP Escort Required OR Alarming Dosimeter Req'd
-Danger - High Radiation Area

Contamination - B/G (dpm/100 cm2) / Contamination - B/G (dpm/Gross Smear)

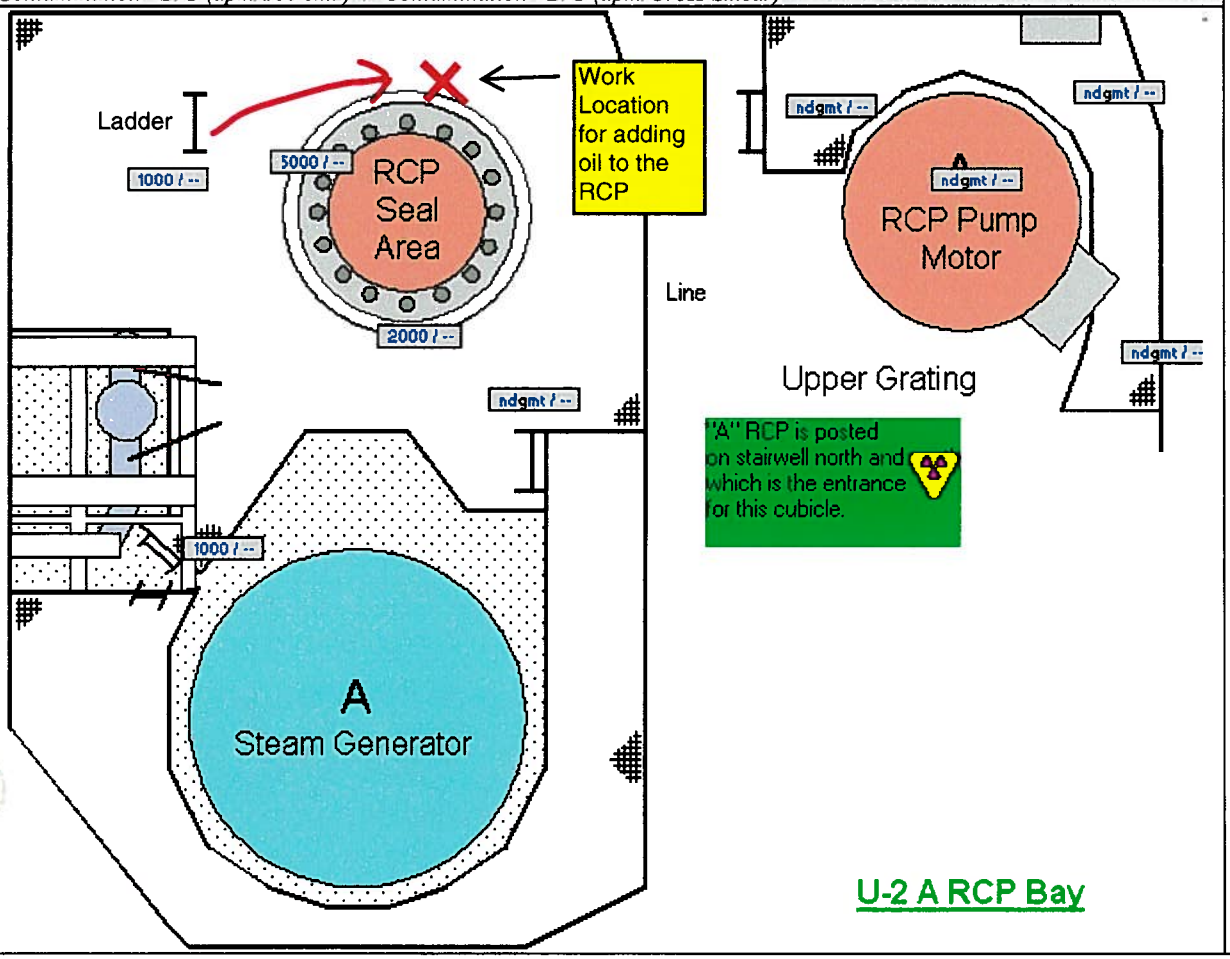

A4.1.R Emergency Plan G2.4.43 – **RO**

CRO-362

TITLE: Make Initial Notifications As Required for an Emergency

EVALUATION LOCATION: ☒SIMULATOR ☐CONTROL ROOM ☐CLASSROOM

PROJECTED TIME: 20 MIN SIMULATOR IC NUMBER: N/A

☐ALTERNATE PATH ☒**TIME CRITICAL** ☐PRA

JPM DIRECTIONS:

1. This task will be done in the simulator area where the Southern Link phones can be accessed.
2. The Candidate will have 15 minutes from the start time to complete the initial notifications and then time to activate the ERO call-out system.
3. The evaluator, **upon commencement of the JPM**, shall fill in data on the and NMP-EP-111, Figure 1 then provide both NMP-EP-110 Checklist 2, NMP-EP-110 Table 1, and EIP-8.3 table 1 to the candidate.

TASK STANDARD: Required for successful completion of this JPM:

- Complete the ERO callout system per EIP-8.3 Table 1.
- Initiate notification using the Emergency Notification Network (ENN) to at least ONE state agency within 15 minutes.
- Complete NMP-EP-111, Emergency Notifications, Checklist 2.

Examinee:		
Overall JPM Performance:	**Satisfactory** ☐	**Unsatisfactory** ☐
Evaluator Comments (attach additional sheets if necessary)		

EXAMINER: _____

CONDITIONS

When I tell you to begin, you are to **MAKE INITIAL NOTIFICATIONS AS REQUIRED FOR AN EMERGENCY AND ACTIVATE THE EMERGENCY CALLOUT SYSTEM**. The conditions under which this task is to be performed are:

a. A General Emergency has just been declared by the Shift Manager due to an event on Unit 1.

b. The Emergency Notification form has been electronically approved and transmitted.

c. The Shift Manager has provided you with the following:

1. FNP-EIP-8.3, Table 1, Information For Emergency Response Notification System Activation
2. NMP-EP-111 Table 1, Applicable Agencies for SNC Emergency Notification
3. NMP-EP-111, Figure 1, Emergency Notifications
4. NMP-EP-111 Checklist 2, Emergency Notifications - Electronic Method

d. The Shift Manager has directed you to:

- **PERFORM** the initial ENN notification over the Southern LINC ENN.
  - **USE** the SOUTHERN LINC and **actually perform** this function.
  - The SOUTHERN LINC will be selected to **WIDE AREA TRN ENN** on the display.
- **ACTIVATE** the ERO callout system per EIP-8.3, Table 1.
  - USE the HANDS FREE SPEAKER for the phone call.

e. This JPM contains time critical elements.

The Evaluator MUST enter the following Dates and Times on the Notification Form.

- **LINE 10: "DECLARATION" TIME/DATE; use time at which the JPM is started.**
- **LINE 12: "Shutdown at Time" TIME/DATE; use declaration time minus 10 minutes.**
- **LINE 17: "APPROVAL Time/DATE"; use time at which the JPM is started**
- **NOTIFIED BY: add candidate's NAME.**

INITIATING **CUE**, "You may begin."

EVALUATION CHECKLIST

ELEMENTS:	STANDARDS:	RESULTS: (CIRCLE)
____ **TIME CRITICAL ELEMENT and JPM START TIME**	**UP TO 15 MINUTES**	

NOTE:
- The time it takes to complete element 2 through 3 is time critical and is required to be completed within 15 minutes of the declaration time which is the start time of the JPM.
- Element 1 can be accomplished after the initial notification.
- Element 1 can be verified as completed successfully via the callback that occurs to the Simulator phone.

EVALUATION CHECKLIST

ELEMENTS:	STANDARDS:	RESULTS: (CIRCLE)
*1. Initiate the ERO callout system per EIP-8.3 Table 1 provided by the Shift Manager.	From any plant telephone dial the number specified on the table to contact the ERO callout system.	S / U
prompts that the system would provide: "Enter **the scenario activation password**, followed by the pound sign."	When prompted, **Enter the SCENARIO ACTIVATION** PASSWORD (123456789#)	S / U
"you have entered (#entered). Is that correct? Enter 9 for yes, or 6 for no"	If entered correctly, **Enters 9 Else enters 6 and returns to the previous.**	S / U
"Enter the scenario activation number, followed by the pound sign."	Enters the **SCENARIO ID** (74685#).	
"you have entered (#entered). Is that correct? Enter 9 for yes, or 6 for no"	If entered correctly, **Enters 9 Else enters 6 and returns to the previous.**	S / U
"press 3 to build the scenario"	When directed **enters 3.**	
"the scenario is building"	**Cue**. "The security tower called and reports that the ERO callout system called and delivered message 3".	

CAUTION:
- **Ensure that no actual transmissions to emergency agencies occur.**
  - ***WIDE AREA, TRN ENN should be used*** in lieu of "WIDE AREA, FEP ENN"

2. Verify the Southern LINC ENN Radio being used is turned on and selected to the "WIDE AREA, TRN ENN"	Red light on power supply is lit and radio is actually turned on. Checks alignment to "**WIDE AREA, TRN ENN**"	S / U

NOTE: Element 3 & 4, ROLL CALL, are NOT required to be completed. IF the candidate elects to skip ROLL CALL, proceed to element 5

EVALUATION CHECKLIST

ELEMENTS:	STANDARDS:	RESULTS: (CIRCLE)
3. **(NMP-EP-111 Checklist 2, STEP 1-3.b.)** Initiate Roll Call using the Emergency Notification Network (ENN).	Press group pushbutton, verify display shows WIDE AREA, TRN ENN. An Instructor will be on the other Southern LINC ENN Radio. See below for student announcement.	S / U

Press PTT, wait for the chirp and announce "This is a **DRILL** message. This is [NAME] AT Plant Farley. An EMERGENCY HAS BEEN DECLARED. PLEASE ENSURE YOU ARE LOGGED INTO WEBEOC AND STBANDBY TO CONFIRM RECEIPT OF AN EMERGENCY MESSAGE."
Release the PTT pushbutton.

4. **(NMP-EP-111 Checklist 2, STEP 3.c.)** **Call** each facility by name (see Table 1) and confirm they are in standby.	**SEE BOOTH RESPONSE FORM FOR CUES.**	S / U
*5. **(NMP-EP-111 Checklist 2 STEP 8)** **Contact** each agency by name (see Table 1) and use the following script to ask each agency to verify receipt of the emergency message:	The candidate reads the following script and then calls for each state agency in each category the instructor will say the following:	S / U

Press PTT, wait for the chirp and announce "This is a **DRILL** message. This is [NAME] AT Plant Farley. EMERGENCY NOTIFICATION MESSAGE NUMBER ONE (1) HAS BEEN TRANSMITTEDTO YOU ELECRONICALLY BY WEBEOC. DID YOU RECEIVE THE MESSAGE?"
Release the PTT pushbutton.

CUE: SEE BOOTH RESPONSE FORM FOR CUES.

_____ **TIME CRITICAL ELEMENT STOP TIME**	When confirmation of receipt by the first State AGENCY is received the Critical Element time stops.	
*6. **(NMP-EP-111 Checklist 2 STEP 9)** **Record** the TIME (HH:MM) and DATE (mm/dd/yy) when the first agency acknowledges electronic notification on the message confirmation portion of the EN Form (either electronic or manual). This time is the notification time.	RECORDS the time and date on the EN FORM	S / U

EVALUATION CHECKLIST

ELEMENTS:	STANDARDS:	RESULTS: (CIRCLE)
*7. **(NMP-EP-111 Checklist 2 STEP 10) Contact one agency** in each state by name (see Table 1) for the applicable site AND **record** the name of each agency person confirming receipt on the message confirmation portion of the EN Form (either electronic **or manual).**	Contacts **one agency in each state** on Table 1, and records names. **CUE: SEE BOOTH RESPONSE FORM FOR CUES.**	S / U

_____ STOP TIME

Terminate JPM after completion of all Critical elements

CRITICAL ELEMENTS: Critical Elements are denoted with an Asterisk (*) preceding the element number.

GENERAL REFERENCES:

1. NMP-EP-111, V 2.0
2. FNP-0-EIP-8.3, V14.0
3. KAs: G2.4.43 RO-3.2 SRO-3.8

GENERAL TOOLS AND EQUIPMENT:

PROVIDED by examiner:

1. NMP-EP-111 Table 1
2. NMP-EP-111 Checklist 2
3. FNP-EIP-8.3, Table 1, with steps 1 & 2 marked complete
4. NMP-EP-111, Figure 1 with proper date and times added.

COMMENTS:

Element 1 can be actually performed, using Speaker phone to confirm NO actual actuation is made. IF Element 1 is reverted to an actual perform, replace Bullet #2 for the Initial conditions item c with the following:

- **ACTIVATE** the ERO callout system per EIP-8.3, Table 1.
  - USE the HANDS FREE SPEAKER for the phone call.

Alternatively it can be simulated. If reverted to simulate use the following to replace bullet #2.

- **ACTIVATE** the ERO callout system per EIP-8.3, Table 1.
  - **SIMULATE** the phone call. **DO NOT actually press any buttons on the telephone.**

STEP	Evaluation
1	**Critical:** Task completion: required to properly complete the task as assigned. Call out can only be performed in this manner.
2	Not critical: this is a task that will be performed prior to the task start and the phone will already be in this mode.
3-4	Not critical: Roll call is not required or expected since the Emergency Notification form has been electronically approved and transmitted.
5	**Critical:** Task completion: required to properly complete the notification of one state agency in each state.
6	**Critical:** Task completion: required to properly document the receipt of the ENN form.
7	**Critical:** Task completion: **One agency** in each state is required to be contacted per EP-111 Table 1.

SOUTHERN LINC Phone talker communication GUIDE

Give this to the Instructor performing phone talker duties

ROLL CALL (if implemented)

#3-4 ALABAMA EMA, Houston County EMA, Georgia EMA at Atlanta EOC and Early County EMA will respond. NO other stations are manned.

ALABAMA EMA, **"John Brown is on the line."**
Alabama Radiation Control (ARC) at Montgomery EOC, **"Nancy Wiilis is on the line."**
Alabama Radiation Control at Alabama Forward EOC, **"Joe Lawson is on the line."**
Houston County EMA, **"Steve Smith is on the line."**

Georgia EMA at Atlanta EOC, **"Ed Stern is on the line."**
Georgia EMA at Georgia Forward EOC, **"Pam Brown is on the line."**
Early County EMA, **"Chuck Terry is on the line."**

#5-7 THE first agency questioned for receipt will only respond with "I have received message number 1" and will require the candidate to request the name. AFTER the first NAME has been requested, then the RESPONSE will include the name:

First agency response: **"I have received message number one."**
When the name is requested, then provide the applicable name.

ALABAMA EMA, "**John Brown** has received message number one."
Alabama Radiation Control (ARC) at Montgomery EOC, "**Nancy Wiilis** has received message number one."
Alabama Radiation Control at Alabama Forward EOC, "**Joe Lawson** has received message number one."
Houston County EMA, "**Steve Smith** has received message number one."

Georgia EMA at Atlanta EOC, "**Ed Stern** has received message number one."
Georgia EMA at Georgia Forward EOC, "**Pam Brown** has received message number one."
Early County EMA, "**Chuck Terry** has received message number one."

CONDITIONS

When I tell you to begin, you are to **MAKE INITIAL NOTIFICATIONS AS REQUIRED FOR AN EMERGENCY AND ACTIVATE THE EMERGENCY CALLOUT SYSTEM**. The conditions under which this task is to be performed are:

a. A General Emergency has just been declared by the Shift Manager due to an event on Unit 1.

b. The Emergency Notification form has been electronically approved and transmitted.

c. The Shift Manager has provided you with the following:

5. FNP-EIP-8.3, Table 1, Information For Emergency Response Notification System Activation
6. NMP-EP-111 Table 1, Applicable Agencies for SNC Emergency Notification
7. NMP-EP-111, Figure 1, Emergency Notifications
8. NMP-EP-111 Checklist 2, Emergency Notifications - Electronic Method

d. The Shift Manager has directed you to:

- **PERFORM** the initial ENN notification over the Southern LINC ENN.
  - **USE** the SOUTHERN LINC and **actually perform** this function.
  - The SOUTHERN LINC will be selected to **WIDE AREA TRN ENN** on the display.
- **ACTIVATE** the ERO callout system per EIP-8.3, Table 1.
  - USE the HANDS FREE SPEAKER for the phone call.

e. This JPM contains time critical elements.

NUCLEAR POWER PLANT EMERGENCY NOTIFICATION FORM

1. [A] DRILL [B] ACTUAL EVENT MESSAGE # 1

2. [A] INITIAL [B] FOLLOW-UP NOTIFICATION: TIME ____ DATE ____ / ____ / ____ AUTHENTICATION # ____

3. SITE: Farley Nuclear Plant Confirmation Phone # (334) 814-4662

4. **EMERGENCY CLASSIFICATION:** [A] UNUSUAL EVENT [B] ALERT [C] SITE AREA EMERGENCY [D] GENERAL EMERGENCY

BASED ON EAL# **RG1** EAL DESCRIPTION:

Offsite dose resulting from an actual or imminent release of gaseous radioactivity exceeds 1,000 mR TEDE or 5,000 mR Thyroid CDE for the actual or projected duration of the release using actual meteorology.

5. **PROTECTIVE ACTION RECOMMENDATIONS:** [A] NONE

[B] EVACUATE

[C] SHELTER **A, B5, C5, J5, K5**

[D] Advise Remainder of EPZ to Monitor Local Radio/TV Stations/Tone Alert Radios for Additional Information and Consider the use of KI (potassium iodide) in accordance with State plans and policy.

[E] OTHER

6. **EMERGENCY RELEASE:** [A] None [B] Is Occurring [C] Has Occurred

7. RELEASE SIGNIFICANCE: [A] Not applicable [B] Within normal operating limits [C] Above normal operating limits [D] Under Evaluation

8. EVENT PROGNOSIS: [A] Improving [B] Stable [C] Degrading

9. METEOROLOGICAL DATA: Wind Direction from **335** degrees* Wind Speed **3.4** mph*

(* May not be available for Initial Notifications) Precipitation **NONE** * Stability Class* [A] [B] [C] [D] [E] [F] [G]

10. [A] DECLARATION [B] TERMINATION Time ____ Date **5** / ____ / **11**

AFFECTED UNIT(S): [1] [2] [All]

12. Unit Status: (Unaffected Unit(s) Status Not Required for Initial Notifications)

[A] U1 0 % Power Shutdown at: Time ____ Date **5** / ____ / **11**

[B] U2 ____ % Power Shutdown at: Time ____ Date ____ / ____ / ____

13. REMARKS: A PUFF release is occurring.

FOLLOW-UP INFORMATION (Lines 14 through 16 Not Required for Initial Notifications)

EMERGENCY RELEASE DATA. NOT REQUIRED IF LINE 6A IS SELECTED.

14. RELEASE CHARACTERIZATION: TYPE: [A] Elevated [B] Mixed [C] Ground UNITS: [A] Ci [B] Ci/sec [C] µCi/sec

MAGNITUDE: Noble Gases: ____ Iodines: ____ Particulates: ____ Other: ____

FORM: [A] Airborne Start Time: ____ Date: ____ / ____ / ____ Stop Time: ____ Date ____ / ____ / ____

[B] Liquid Start Time: ____ Date: ____ / ____ / ____ Stop Time: ____ Date ____ / ____ / ____

15. PROJECTION PARAMETERS: Projection Period: ____ Hours Estimated Release Duration: ____ Hours

Projection performed: Time ____ Date ____ / ____ / ____

16. PROJECTED DOSE:

DISTANCE	TEDE (mrem)	Adult Thyroid CDE (mrem)
Site boundary		
2 Miles		
5 Miles		
10 Miles		

17. APPROVED BY: W. T. Door Title: Emergency Director Time: ____ Date: 5 / ____ / 11

NOTIFIED BY: ____

RECEIVED BY: ____ Time: ____ Date: ____ / ____ / ____

(To be completed by receiving organizaiton)

Checklist 2 - Emergency Notifications - Electronic Method (page 1 of 4)

NOTES:	**1) To expedite availability of WebEOC in an emergency, the crew members responsible for completing Figure 1 and making electronic notifications should login to WebEOC as soon as possible utilizing Attachment 3 and remain logged-in.** **2) The ED should be notified if during the notification process ALL stations fail to respond to the roll call OR a back-up communication system for any agency is being used.** **3) The EN Form should be transmitted as soon as it is APPROVED by the ED. The EN form is transmitted when OK is selected following selection of the APPROVAL button. Do not delay EN form preparation or transmittal to complete Roll Call.**

Upon receiving direction to prepare/transmit an Emergency Declaration Message:

1. **Obtain** a copy of Table 1.

2. Establish contact on the ENN by performing a roll call of the applicable agencies. Each agency should be contacted. Check off each agency on Table 1 as acknowledgement is obtained.

3. **Roll call**:
   a. **Read** the following script:

   "**[Select one]** THIS IS A [☐ DRILL ☐ ACTUAL EMERGENCY] MESSAGE.

   THIS IS [YOUR NAME] _____ AT

   [Select one] [☐Plant FARLEY ☐ Plant HATCH ☐ Plant VOGTLE].

   AN EMERGENCY HAS BEEN DECLARED. PLEASE ENSURE YOU ARE LOGGED INTO WEBEOC AND STANDBY TO CONFIRM RECEIPT OF AN EMERGENCY MESSAGE.

   "**[Select one]** THIS IS A [☐ DRILL ☐ ACTUAL EMERGENCY] MESSAGE."

   b. **Call** each facility by name (see Table 1) and confirm they are in standby.

   c. **IF** time allows **THEN** agencies not contacted by the ENN should be contacted using the phone numbers provided in Table 1.

Checklist 2 - Emergency Notifications - Electronic Method (page 2 of 4)

4. **IF** not already completed **THEN** complete the electronic notification form in accordance with instructions provided in Figure 3 - Flowchart for Initial Emergency Notifications (preferred) or Figure 4 - Flowchart for Follow-Up Notifications (preferred), as appropriate. Guidance for form completion is provided in Attachment 1, Part 1 - Guidance for Initial EN Form completion and Attachment 1, Part 2 – Guidance for Follow-up EN Form Completion.

5. **WHEN** the Emergency Notification form has been electronically approved and transmitted, **THEN** confirm receipt of the notification using Figure 5 – Emergency Notification Receipt Confirmation or the remainder of this checklist as guidance.

6. **IF** ROLL CALL of the applicable Table 1 agencies is not complete **THEN** terminate roll call.

7. (Vogtle Only) **IF** any agency requires message authentication **THEN** authenticate the message as follows:
   a. **Enter** the code provided by the requesting agency.
   b. **Select** GET AUTHENTICATION CODE.
   c. **Provide** the authentication code supplied by the system to the agency requiring authentication verbally over the ENN.

8. **Contact** each agency by name (see Table 1) and use the following script to ask each agency to verify receipt of the emergency message:

   "[Select one] THIS IS A [☐ DRILL ☐ ACTUAL EMERGENCY] MESSAGE.

   THIS IS [YOUR NAME] _____ AT

   [Select one] [☐Plant FARLEY ☐ Plant HATCH ☐ Plant VOGTLE].

   "EMERGENCY NOTIFICATION, MESSAGE NUMBER [MESSAGE NUMBER] ____ HAS BEEN TRANSMITTED TO YOU ELECTRONICALLY [either WebEOC or Fax]. DID YOU RECEIVE THE MESSAGE?"

9. **Record** the TIME (HH:MM) and DATE (mm/dd/yy) when the first agency acknowledges electronic notification on the message confirmation portion of the EN Form (either electronic or manual). This time is the notification time.

10. **Contact** each agency by name (see Table 1) for the applicable site AND **record** the name of each agency person confirming receipt on the message confirmation portion of the EN Form (either electronic or manual).

11. Select **SAVE.**

12. **After confirming receipt by other agencies, IF** an agency does not receive the EN form electronically, **THEN read** lines 1 through line 13 and line 17 for initial notifications (or lines 1 through 17 for a follow-up notification) for the agency not in receipt.

Checklist 2 - Emergency Notifications - Electronic Method (page 3 of 4)

13. Continue by asking: "DO YOU HAVE ANY QUESTIONS CONCERNING THE NOTIFICATION MESSAGE?"
    Respond to questions as presented. If necessary, continue discussions with individual agencies off-line to prevent delays in future notifications and to limit voice traffic on the ENN that may be distracting to other agencies.

14. **IF** requested by an agency to read any portion of the EN Form, **THEN read** the requested portions of the EN Form.

15. After all questions have been resolved print the completed EN form.

Checklist 2 - Emergency Notifications - Electronic Method (page 4 of 4)

Continuing Action

1. Continue by asking: "DO YOU HAVE ANY QUESTIONS CONCERNING THE NOTIFICATION MESSAGE?"
   Respond to questions as presented. If necessary, continue discussions with individual agencies off-line to prevent delays in future notifications and to limit voice traffic on the ENN that may be distracting to other agencies.

2. If an individual agency cannot be reached via the ENN, use an alternate method (e.g., commercial telephone line and the number provided in the emergency response telephone directory) to contact the individual station directly.

3. If multiple agencies cannot be reached via the ENN, then go to the applicable sites "Back-up Communication Systems" (Table 1) for offsite notifications.

4. For ALERT and higher emergency classification, make follow-up notifications at least every hour or when conditions warrant. When requested, notify alternate state and county notification locations.

Table 1 - Applicable Agencies for SNC Emergency Notification (page 1 of 3)

Farley:

1. Primary Notification System: ENN – SoLINC
2. Back-up Communication systems –
   (1) Comlabs, (2) Commercial Telephone, (3) Radio, (4) Satellite phone

INITIAL	ACK	FOLLOW-UP	CONTACT NAME
Alabama (at least one– in preferred order)			
Alabama EMA (AEMA)** ENN (1306), OPX (6619), (205-280-2312, 205-280-2310)	☐	Alabama EMA	_____
Alabama Radiation Control (ARC) at Montgomery EOC ENN (1305), OPX (6628), (334-206-5391), (334-324-0076)	☐	ARC at Montgomery EOC	_____
Alabama Radiation Control at Alabama Forward EOC ENN (1307), OPX 6621), (334-793-1565)	☐	ARC at Alabama Forward EOC	_____
Houston County EMA or 911 Center** ENN (1307), OPX (6621) (334-794-9720, 334-793-9655, 334-677-4807/4808)	☐	Houston County EMA	_____
Georgia (at least one– in preferred order)			
Georgia EMA at Atlanta EOC** ENN (1304), OPX (6629) (404-635-7200)	☐	Georgia EMA at Atlanta EOC	_____
Georgia EMA at Georgia Forward EOC ENN (1308) OPX (6626), (229-723-4826)	☐	Georgia EMA at Georgia Forward EOC	_____
Early County EMA or 911 Center** ENN(1308) OPX (6622) (229-723-3577, 3578, 4826)	☐	Early County EMA	_____

** Denotes agency is a 24 Hour Warning Point

INFORMATION FOR EMERGENCY RESPONSE NOTIFICATION SYSTEM ACTIVATION

1. Obtain the SCENARIO ACTIVATION PASSWORD and the SCENARIO IDENTIFICATION NUMBERS from the Unit 2 Shift Supervisor, the SAS Operator, or the Security Shift Foreman.

   SCENARIO ACTIVATION PASSWORD: 123456789

2. Operations Shift Manager, Shift Supervisor or Emergency Director determine the message to be sent from step 11.

   Message Number: 3

   SCENARIO IDENTIFICATION NUMBER: 74685

3. Call the Farley Emergency Callout System in Dothan at **9-702-2548** and follow the phone instructions to activate a scenario. If the Farley Emergency Callout System cannot be activated at this number then, go to step 9 to activate the backup system.

4. When the system requests it, input the SCENARIO ACTIVATION PASSWORD obtained in step 1 and the SCENARIO IDENTIFICATION NUMBER associated with the message number determined in step 2.

5. When directed press the three key on the phone to activate the scenario.

6. When the system informs you that the scenario is building hang up the phone.

7. If there was a problem activating the Farley Emergency Callout System then, go to step 9 to activate the backup system.

8. When the Farley Emergency Callout System or the backup activates, the following will occur:

   8.1 Emergency Response Organization pagers will be activated with the (800) number.
   8.2 The SFM in the SAS should call the Shift Clerk when the ERO pager is activated.
   8.3 The system will also call the Shift Clerk. The call from the SAS and this phone call allows verification that the system has activated.
   8.4 For eight to ten minutes, the system will accept calls from individuals that have called in from the pager activation.
   8.5 After eight to ten minutes the system will continue to accept inbound calls and will also call all of the individuals in the database that have not responded to the 800 number.
   8.6 As individuals call in or are called, they will have to identify themselves by entering their employee number, receive the message selected in step 2, respond if they are coming to the plant and enter the number of minutes if they are coming to the plant.

INFORMATION FOR EMERGENCY RESPONSE NOTIFICATION SYSTEM ACTIVATION

8.7 Every 15 minutes for the duration of the callout, a printout will be sent to the Shift Clerks office and/or the fax machine in the TSC listing the people that have responded.

9. If the system has failed to activate, call the backup system at (800) 475-9705. Enter the company ID code of **1044** and proceed as described in steps 4 through 7.

10. If both systems have failed to activate, proceed to FNP-0-EIP-8.3, step 11, to manually callout the emergency response staff.

11. Message Numbers

Message 1 EMERGENCY CALL OUT
Scenario Identification Number:_____

THIS IS NOT A DRILL, I repeat THIS IS NOT A DRILL. This is a callout of the Farley Emergency Response Organization due to a declared emergency. Respond to your Emergency Response Facility as quickly and safely as possible. THIS IS NOT A DRILL.

Message 2 SECURITY EVENT CALL OUT
Scenario Identification Number:_____

THIS IS NOT A DRILL, I repeat THIS IS NOT A DRILL. This is a call-out of the Farley Emergency Response Organization. An emergency has been declared at the plant due to a security event. If responding from off site, the TSC staff should respond to the Emergency News Center in Dothan as quickly and safely as possible. If you are currently on site, do not try to leave the plant or report to your emergency response facility. Follow the directions issued over the plant public address system. THIS IS NOT A DRILL

Message 3 DRILL CALL OUT
Scenario Identification Number:__74685_____

THIS IS A DRILL, I repeat THIS IS A DRILL. This is a call-out of the Farley Emergency Response Organization due to a drill or exercise. Respond to your Emergency Response Facility as quickly and safely as possible. THIS IS A DRILL

Message 4 COMMUNICATIONS TEST
Scenario Identification Number:_____

THIS IS A DRILL, I repeat THIS IS A DRILL. This is a communication test of the Farley Emergency Response Organization. An emergency classification has not been declared. There is no required activation. Do not physically report to your designated Emergency Response Facility. This is a communication test only. THIS IS A DRILL.

A4.1.S SRO Emergency Plan ADMIN G2.4.44

TITLE: Provide an updated Protective Action Recommendation (PAR).

EVALUATION LOCATION: ☐ SIMULATOR ☐CONTROL ROOM ☒CLASSROOM

PROJECTED TIME: 15 MIN SIMULATOR IC NUMBER: N/A

- ALTERNATE PATH ☒ TIME CRITICAL ☐ PRA

JPM DIRECTIONS:

1. This task will be conducted individually in any setting in which all the necessary references are available.
2. Provide the candidate a copy of Message Number 001 for the event in progress.
3. Provide the candidate a copy of the Partially prepared Message Number 002, that does not contain LINE 5 data, nor does it contain approval signatures or notification information.
4. Ensure a clock is in the room in which this task will be conducted.
5. This task is TIME CRITICAL.

CAUTION: A KEY is included and precedes the student handout. CARE must be taken when providing the Student HANDOUT as to not also include the KEY.

TASK STANDARD: Upon successful completion of this JPM, the examinee will:

- Correctly assess the necessary changes in the PARs.
- Complete the ENN FORM LINE 5, providing a PAR recommendation to the ED within 15 minutes from beginning of task.

Examinee:		
Overall JPM Performance:	**Satisfactory** ☐	**Unsatisfactory** ☐
Evaluator Comments (attach additional sheets if necessary)		

EXAMINER: _____

CONDITIONS

When I tell you to begin, you are to **PROVIDE AN UPDATED PROTECTIVE ACTION RECOMMENDATION (PAR).** The conditions under which this task is to be performed are:

a. Unit 1 has declared a General Emergency based on EAL# FG1;
   FG1: Loss of ANY Two Barriers AND Loss or Potential Loss of Third Barrier.
b. A radioactive release is occurring from the 1A SG, which has a tube rupture and is faulted outside of Containment.
c. FRP-H.1, Loss of Heat Sink, is in progress.
d. Dose Assessment is provided that dose at site boundary will be:
   - < 1 R TEDE at site boundary and
   - < 5 R Thyroid CDE
e. The IPC function "EP WEATHER" is not available.
f. Wind direction and speed has changed.
g. The current MET Tower data is as follows:
   - Wind Direction from _045_ degrees.
   - Wind Speed _4.5_ mph*.
   - Precipitation _none._
   - ΔT value is _-0.25°F._
h. The ENN Form has been manually completed by another operator with the exception of LINE 5.
i. You are required to develop the PARS per NMP-EP-112, Attachment 1, INITIAL ACTIONS, **AND** complete the following documentation:
   - NMP-EP-112, Attachment 5, PAR Worksheet.
   - Line 5 of the Emergency Notification Form message #002.
j. This task has **TIME CRITICAL** elements.

INITIATING **CUE**: "IF you have no questions, you may begin."

EVALUATION CHECKLIST

ELEMENTS:	STANDARDS:	RESULTS: (CIRCLE)
____ **CRITICAL TIME START**		
1. Attachment 1 step A.1 & A.2, And ATTACHMENT 5 step 1.	**Determines PAR 2** is applicable.	S / U
Reviews P&Ls and Utilizes ATTACHMENT 5 to document previously affected ZONES.		
Review conditions and Attachment 1 Flowchart to determine PAR 2 remains in effect.		
Documents on Attachment 5	Documents ATTACHMENT 5 PAR 2 Check box.	

EVALUATION CHECKLIST

ELEMENTS:	STANDARDS:	RESULTS: (CIRCLE)
* 2. Attachment 1 step A.3: And ATTACHMENT 5 Step 2 & 3. Utilizes ATTACHMENT 2 Table 1 to determine affected Zones for the new wind direction of 045 degrees.	**Identifies** zones **A, B5, C5 and D5** are the affected ZONES for the NEW wind direction.	S / U
* 3. Attachment 1 step A.4: And ATTACHMENT 5 step 3 & CAUTION IDENTIFIES on the TABLE the following ZONES are affected: A B5 C5 **D5** J5 K5	**DOCUMENTS** on ATTACHMENT 5 zones **A, B5, C5, D5, J5 and K5** are the ZONES to be **evacuated.** **NOTE**: the same zones from message #001 are included **in addition to D5** **Documents PAR B & D are applicable.**	S / U
* 4. Attachment 1 step A.5: And ATTACHMENT 5 On the ENN Form for the selected PAR: • Select block 5.B and record the "Evacuate" zones OR select block 5.C and record the "Shelter" zones" • Select block 5.D • IF PAR 4 is selected, THEN additionally select block 5.E "Other" and provide "Affected Sectors" and "To Miles"	DOCUMENTS ON LINE 5 of ENN Form message #002 **Select block 5.B and records on line 5B: zones A, B5, C5, D5, J5 and K5.** **Select block 5.D.**	S / U

_____ **CRITICAL TIME STOP**

Terminate when all elements of the task have been completed.

CRITICAL ELEMENTS: Critical Elements are denoted with an asterisk (*) before the element number.

GENERAL REFERENCES:

1. NMP-EP-112, V 1.0
2. NMP-EP-110, V1.0

2. KA: G2.4.44 SRO (4.4)

GENERAL TOOLS AND EQUIPMENT:

NMP-EP-112
INITIAL NOTIFICATION message #001.
Partially completed INITIAL NOTIFICATION message #002.

Critical ELEMENT justification:

STEP	Evaluation
1	Not critical: this task will be performed during evaluation of PARs, but student is not required to state that PAR 2 is required.
2	**Critical:** Task completion, Required to properly assess the PAR. **Inclusion of extra ZONES is considered FAILURE criteria.** • Improper completion of this element could result in more zones being impacted than necessary. • Step 6.2.4 warns against expanding the evacuation ZONES as a greater risk to the public.
3	**Critical:** Task completion, Required to properly assess the PAR. • As noted in Cautions of Attachment 1 step 3 and Attachment 5, PAR Revisions MUST include previous PARs
4	**Critical:** Task completion, Required to properly assess the PAR. • As noted in Cautions of Attachment 1 step 3 and Attachment 5, PAR Revisions MUST include previous PARs

COMMENTS:

KEY

LINE 5 of ENN message #002

5.	PROTECTIVE ACTION RECOMMENDATIONS:	A None
B	Evacuate ZONES: A, B5, C5, **D5**, K5, J5	
C	Shelter ZONES:	
D	Advise Remainder of EPZ to Monitor Local Radio/TV Stations/Tone Alert Radios for Additional Information and Consider the use of KI (potassium iodide) in accordance with State plans and policy.	
E	Other:	

Attachment 5 PAR worksheet

PAR 1	**Wind direction from**	
	ENN Line 5 [C] Shelter Zones	
	ENN line 5 [D]	**Advise remainder of EPZ to Monitor Local Radio/TV Stations /Tone Alert Radios. Consider the use of KI (Potassium Iodide) in accordance with State Plans and Policy**

PAR 2	**Wind direction from**	
	ENN Line 5 [C] Shelter Zones	**A, B5, C5, D5, K5, J5**
	ENN line 5 [D]	**Advise remainder of EPZ to Monitor Local Radio/TV Stations /Tone Alert Radios. Consider the use of KI (Potassium Iodide) in accordance with State Plans and Policy**

PAR 3	**Wind direction from**	
	ENN Line 5 [C] Shelter Zones	
	ENN line 5 [D]	**Advise remainder of EPZ to Monitor Local Radio/TV Stations /Tone Alert Radios. Consider the use of KI (Potassium Iodide) in accordance with State Plans and Policy**

PAR 4	**Wind direction from**	
	ENN Line 5 [C] Shelter Zones	
	ENN line 5 [D]	**Advise remainder of EPZ to Monitor Local Radio/TV Stations /Tone Alert Radios. Consider the use of KI (Potassium Iodide) in accordance with State Plans and Policy**
	ENN Line 5 [E]	**Evacuate Affected Sectors _____ to _____ miles**

CONDITIONS

When I tell you to begin, you are to **PROVIDE AN UPDATED PROTECTIVE ACTION RECOMMENDATION (PAR).** The conditions under which this task is to be performed are:

a. Unit 1 has declared a General Emergency based on EAL# FG1;
   FG1: Loss of ANY Two Barriers AND Loss or Potential Loss of Third Barrier.
b. A radioactive release is occurring from the 1A SG, which has a tube rupture and is faulted outside of Containment.
c. FRP-H.1, Loss of Heat Sink, is in progress.
d. Dose Assessment is provided that dose at site boundary will be:
   - < 1 R TEDE at site boundary and
   - < 5 R Thyroid CDE
e. The IPC function "EP WEATHER" is not available.
f. Wind direction and speed has changed.
g. The current MET Tower data is as follows:
   - Wind Direction from _045_ degrees.
   - Wind Speed _4.5_ mph*.
   - Precipitation _none._
   - ΔT value is _-0.25°F._
h. The ENN Form has been manually completed by another operator with the exception of LINE 5.
i. You are required to develop the PARS per NMP-EP-112, Attachment 1, INITIAL ACTIONS, **AND** complete the following documentation:
   - NMP-EP-112, Attachment 5, PAR Worksheet.
   - Line 5 of the Emergency Notification Form message #002.
j. This task has **TIME CRITICAL** elements.

NUCLEAR POWER PLANT EMERGENCY NOTIFICATION FORM

1. [X] DRILL [B] ACTUAL EVENT MESSAGE # 1

2. [A] INITIAL [X] FOLLOW-UP NOTIFICATION: TIME 20 min ago DATE 5 / Today / 11 AUTHENTICATION # _____

SITE: Farley Nuclear Plant Confirmation Phone # (334) 814-4662

4. **EMERGENCY CLASSIFICATION:** [A] UNUSUAL EVENT [B] ALERT [C] SITE AREA EMERGENCY [X] GENERAL EMERGENCY

BASED ON EAL# FG1 EAL DESCRIPTION:

Loss of ANY Two Barriers AND Loss or Potential Loss of Third Barrier

5. **PROTECTIVE ACTION RECOMMENDATIONS:** [A] NONE

[X] EVACUATE A, B5, C5, J5, K5

[C] SHELTER

[X] Advise Remainder of EPZ to Monitor Local Radio/TV Stations/Tone Alert Radios for Additional Information and Consider the use of KI (potassium iodide) in accordance with State plans and policy.

[E] OTHER

6. **EMERGENCY RELEASE:** [A] None [X] Is Occurring [C] Has Occurred

7. RELEASE SIGNIFICANCE: [A] Not applicable [B] Within normal operating limits [X] Above normal operating limits [D] Under Evaluation

8. EVENT PROGNOSIS: [A] Improving [X] Stable [C] Degrading

9. METEOROLOGICAL DATA: Wind Direction from 335 degrees* Wind Speed 3.4 mph*

(* May not be available for Initial Notifications) Precipitation NONE * Stability Class* [A] [B] [C] [D] [X] [F] [G]

10. [X] DECLARATION [B] TERMINATION Time 30 mins ago Date 5 / today / 11

AFFECTED UNIT(S): [X] [2] [All]

12. Unit Status: (Unaffected Unit(s) Status Not Required for Initial Notifications)

[X] U1 0 % Power Shutdown at: Time 60 mins ago Date 5 / today / 11

[B] U2 ____ % Power Shutdown at: Time ____ Date ___ / ___ / ___

13. REMARKS:

FOLLOW-UP INFORMATION (Lines 14 through 16 Not Required for Initial Notifications)

EMERGENCY RELEASE DATA. NOT REQUIRED IF LINE 6A IS SELECTED.

14. RELEASE CHARACTERIZATION: TYPE: [A] Elevated [B] Mixed [C] Ground UNITS: [A] Ci [B] Ci/sec [C] µCi/sec

MAGNITUDE: Noble Gases: ____ Iodines: ____ Particulates: ____ Other: ____

FORM: [A] Airborne Start Time: ____ Date: ___ / ___ / ___ Stop Time: ____ Date ___ / ___ / ___

[B] Liquid Start Time: ____ Date: ___ / ___ / ___ Stop Time: ____ Date ___ / ___ / ___

15. PROJECTION PARAMETERS: Projection Period: ____ Hours Estimated Release Duration: ____ Hours

Projection performed: Time ____ Date ___ / ___ / ___

16. PROJECTED DOSE:

DISTANCE	TEDE (mrem)	Adult Thyroid CDE (mrem)
Site boundary		
2 Miles		
5 Miles		
10 Miles		

17. APPROVED BY: W. T. Door Title: Emergency Director Time: 25 mins ago Date: 5 / today / 11

NOTIFIED BY: J.T. Kelso

RECEIVED BY: ____ Time: ____ Date: ___ / ___ / ___
(To be completed by receiving organizaiton)

NUCLEAR POWER PLANT EMERGENCY NOTIFICATION FORM

1. [X] DRILL [B] ACTUAL EVENT MESSAGE # 2

[A] INITIAL [X] FOLLOW-UP NOTIFICATION: TIME ____ DATE ____ / ____ / ____ AUTHENTICATION # ____

SITE: Farley Nuclear Plant Confirmation Phone # (334) 814-4662

4. **EMERGENCY CLASSIFICATION:** [A] UNUSUAL EVENT [B] ALERT [C] SITE AREA EMERGENCY [X] GENERAL EMERGENCY

BASED ON EAL# FG1 EAL DESCRIPTION:

Loss of ANY Two Barriers AND Loss or Potential Loss of Third Barrier

5. **PROTECTIVE ACTION RECOMMENDATIONS:** [A] NONE

[B] EVACUATE

[C] SHELTER

[D] Advise Remainder of EPZ to Monitor Local Radio/TV Stations/Tone Alert Radios for Additional Information and Consider the use of KI (potassium iodide) in accordance with State plans and policy.

[E] OTHER

6. **EMERGENCY RELEASE:** [A] None [X] Is Occurring [C] Has Occurred

7. RELEASE SIGNIFICANCE: [A] Not applicable [B] Within normal operating limits [X] Above normal operating limits [D] Under Evaluation

8. EVENT PROGNOSIS: [A] Improving [X] Stable [C] Degrading

9. METEOROLOGICAL DATA: Wind Direction from 45 degrees* Wind Speed 4.5 mph*

(* May not be available for Initial Notifications) Precipitation NONE * Stability Class* [A] [B] [C] [D] [X] [F] [G]

10. [X] DECLARATION [B] TERMINATION Time 30 mins ago Date 5 / today / 11

AFFECTED UNIT(S): [X] [2] [All]

12. Unit Status: (Unaffected Unit(s) Status Not Required for Initial Notifications)

[X] U1 0 % Power Shutdown at: Time 60 mins ago Date 5 / today / 11

[X] U2 100 % Power Shutdown at: Time ____ Date ____ / ____ / ____

13. REMARKS: Follow-up notification for PAR Change following a change in wind direction.

FOLLOW-UP INFORMATION (Lines 14 through 16 Not Required for Initial Notifications)

EMERGENCY RELEASE DATA. NOT REQUIRED IF LINE 6A IS SELECTED.

14. RELEASE CHARACTERIZATION: TYPE: [A] Elevated [B] Mixed [C] Ground UNITS: [A] Ci [B] Ci/sec [C] µCi/sec

MAGNITUDE: Noble Gases: ____ Iodines: ____ Particulates: ____ Other: ____

FORM: [A] Airborne Start Time: ____ Date: ____ / ____ / ____ Stop Time: ____ Date ____ / ____ / ____

[B] Liquid Start Time: ____ Date: ____ / ____ / ____ Stop Time: ____ Date ____ / ____ / ____

15. PROJECTION PARAMETERS: Projection Period: ____ Hours Estimated Release Duration: ____ Hours

Projection performed: Time ____ Date ____ / ____ / ____

16. PROJECTED DOSE:

DISTANCE	TEDE (mrem)	Adult Thyroid CDE (mrem)
Site boundary		
2 Miles		
5 Miles		
10 Miles		

17. APPROVED BY: ____ Title: ____ Time: ____ Date: ____ / ____ / ____

NOTIFIED BY: ____

RECEIVED BY: ____ Time: ____ Date: ____ / ____ / ____

(To be completed by receiving organizaiton)

Procedure Owner: Chris Boone / Fleet Emergency Preparedness Manager / Corporate
(Print: Name / Title / Site)

Approved By: Original signed by Christopher E. Boone on 09/24/2010
(Peer Team Champion/Procedure Owner's Signature / Date)

Effective Dates:

09/27/2010	09/27/2010	11/08/2010	09/27/2010
Corporate	FNP	HNP	VEGP

The individuals listed below are the members of the Peer Team responsible for writing and maintaining this procedure.

Corporate	J. D. Grant
Plant Farley	S. M. Odom
Plant Hatch	R. W. Ott
Plant Vogtle	L. E. Mayo

PROCEDURE USAGE REQUIREMENTS		SECTIONS
Continuous Use:	Procedure must be open and readily available at the work location. Follow procedure step by step unless otherwise directed by the procedure.	
Reference Use:	Procedure or applicable section(s) available at the work location for ready reference by person performing steps.	**ALL**
Information Use:	Available on site for reference as needed.	

Revision Description

Version Number	Revision Description
1.0	This procedure supersedes NMP-EP-109, Protective Actions Recommendations. This procedure has been developed to facilitate the implementation of a fleet approach for the performance of initial emergency actions (e.g., classifications, notification and PARS). No technical changes have been made to the procedure. The procedure has been re-issued with a different procedure number to be consistent with the fleet approach for the performance of activities in response to an event.

TABLE OF CONTENTS

1.0 PURPOSE 4

2.0 APPLICABILITY 4

3.0 REFERENCES 4

4.0 DEFINITIONS 5

5.0 RESPONSIBILITIES 6

6.0 PRECAUTIONS AND LIMITATIONS 6

7.0 PROCESS DESCRIPTION 8

8.0 RECORDS 8

9.0 COMMITMENTS 8

ATTACHMENT 1 - ACTION CHECKLIST FOR PAR DEVELOPMENT 9

ATTACHMENT 2 – PLANT FARLEY AFFECTED ZONES FOR PARS 12

ATTACHMENT 3 – PLANT HATCH AFFECTED ZONES FOR PARS 14

ATTACHMENT 4 – PLANT VOGTLE AFFECTED ZONES FOR PARS 16

ATTACHMENT 5 – PAR WORKSHEET 18

1.0 PURPOSE

This procedure provides guidelines for determining Protective Action Recommendations (PARs) which will be communicated to offsite authorities during a General Emergency. PARs are provided as an input to the protective action decision making process for the development of protective action orders. Protective action orders are communicated to the general public by offsite authorities to avoid or reduce the exposure incurred from an accident condition that results in a significant radiological effluent release or has the potential for a release based on degraded plant conditions.

2.0 APPLICABILITY

Protective actions are recommended to offsite authorities to avoid or reduce the radiological exposure that may be incurred by the public from an accident condition that results in a significant radiological effluent release or has the potential for a release based on degraded plant conditions.

This procedure is performed, as required, during drills, exercises, and declared emergencies following declaration of a General Emergency. Attachments 2, 3, and 4 are site–specific. Non-applicable site attachments may be removed and discarded to ensure usage of the correct site-specific attachment.

3.0 REFERENCES

3.1 NRC IN 83-28, Protective Actions Based on Plant Conditions

3.2 EPA-400-R-92-001, Manual of Protective Action Guides and Protective Actions for Nuclear Incidents, October, 1991

3.3 NRC IN 91-72, "Issuance of a Revision to the EPA Manual of Protective Action Guides and Protective Actions for Nuclear Incidents"

3.4 NRC IN 92-08, "Revised Protective Action Guidance for Nuclear Incidents"

3.5 NRC RIS 2003-12, "Clarification of NRC Guidance for Modifying Protective Actions"

3.6 NUREG-0654/FEMA REP 1, Supplement 3

3.7 NRC RIS 2004-13, "Consideration of Sheltering in Licensee's Range of Protective Action Recommendations", August 2, 2004

3.8 NRC RIS 2004-13, Supplement 1, "Consideration of Sheltering in Licensee's Range of Protective Action Recommendations, Dated Aug. 2004", March 10, 2005

3.9 NRC RIS 2005-08, Endorsement of NEI Guidance "Range of Protective Actions for Nuclear Power Plant Incidents", June 6, 2005

4.0 DEFINITIONS

4.1 EPA PROTECTIVE ACTION GUIDELINE (PAG) - exposure levels determined by the Environmental Protection Agency for the evacuation of the offsite public following a release of radioactive materials. These levels have been established at one (1) Rem TEDE or five (5) Rem CDE Thyroid.

4.2 PROTECTIVE ACTION RECOMMENDATIONS (PARs) – shelter, evacuation, monitor, and/or KI recommendations made by SNC to appropriate state agencies. PARs are made by SNC personnel based on the Attachment 1 Flowchart whenever a General Emergency is declared. Additionally, if in the opinion of the ED, conditions warrant the issuance of PARs, a General Emergency will be declared (SNC will not issue PARs for any accident classified below a General Emergency).

4.3 UNCONTROLLED RELEASE - is a radiological effluent release that cannot be immediately stopped via positive control action (Example: Vent stack release from a known or unknown Containment leakage pathway which is not under the control of the shift and requires time to terminate.)

4.4 CONTROLLED RELEASE - is a planned radiological effluent release that can be immediately terminated by the licensee (Example: closure of the Post LOCA CTMT vent valves that were manually opened to lower Containment pressure.).

4.5 PUFF RELEASE - A controlled release that is projected to exceed the PAGs and will be terminated in less than an hour or an uncontrolled release that was projected to exceed the PAGs and has been terminated.

4.6 TOTAL EFFECTIVE DOSE EQUIVALENT (TEDE) - The sum of the deep dose equivalent (for external exposures) and the committed effective dose equivalent (for internal exposures).

4.7 COMMITTED DOSE EQUIVALENT (CDE) - The dose equivalent to organs or tissues of reference that will be received from an intake of radioactive material by an individual during the 50-year period following the intake.

4.8 TONE ALERT RADIO (TAR) – Radio used to provide emergency information to the public living in the 10 mile emergency planning zone around the sites.

5.0 RESPONSIBILITIES

5.1 The Emergency Director (ED) has the non-delegable responsibility for approving PARs .

5.1.1 The EOF Manager may sign approval for the ED after receiving verbal approval from the ED.

5.2 Once the TSC is operational, the TSC has responsibility for developing and communicating offsite PARs until relieved of that responsibility by the EOF.

5.3 Approved PARs may be communicated to applicable offsite authorities by the staff in either the Control Room, TSC or EOF as directed by the ED.

6.0 PRECAUTIONS AND LIMITIATIONS

6.1 Evacuation and Shelter Recommendations

6.1.1 PARs are only applicable when entering a General Emergency.

6.1.2 Evacuation is the preferred action unless conditions impose a greater risk from the evacuation than from the dose received.

6.1.3 Shelter is a preferred action when a 'Puff' type release has occurred.

6.1.4 A plant condition based PAR to shelter a 2-mile radius and 5 miles downwind may be issued when a Puff Release has occurred.

6.1.5 If onsite plant events are underway which would make evacuation dangerous (such as known hostile action) then sheltering should be considered over evacuation recommendations.

6.1.6 When prior knowledge of offsite impediments to evacuation exist (such as flooding, bridge/road closings, or other travel restrictions), then sheltering should be considered over evacuation recommendations.

6.1.7 A recommendation to evacuate or shelter a partial zone is not allowed.

6.1.8 Once an evacuation recommendation for an area has been given, it should not be reduced to a shelter recommendation.

6.2 ED Judgment

6.2.1 The ED may elect to modify PARs based on judgment, if conditions warrant.

6.2.2 The ED shall upgrade to a General Emergency if PARs are determined to be needed and not already in a General Emergency.

6.2.3 Protective action guidelines shall not imply an acceptable dose.

6.2.4 PARs are inherently conservative such that expanding the evacuation zone as an added precaution would result in a greater risk from the evacuation than from the radiological consequences of a release. It also would dilute the effectiveness of the offsite resources used to accommodate the evacuation.

6.3 Recommendations Beyond the 10 mile EPZ

6.3.1 Many assumptions exist in dose assessment calculations, involving both source term and meteorological factors, which make computer predictions over long distances less reliable. The ED should use the recommendation of the dose assessment staff when making recommendations beyond 10 miles.

6.3.2 While evaluating the need to develop PAR 4 recommendations, issuance of appropriate PAR 1, 2, or 3 recommendations should not be delayed.

6.4 Ingestion Pathway and Relocation Responsibilities

6.4.1 Protective actions taken in areas affected by plume deposition following the release are determined and controlled by offsite governmental agencies. SNC is not expected to develop offsite recommendations involving ingestion or relocation issues following plume passage.

6.4.2 SNC may be requested to provide resources to support the determination of post plume protective actions.

6.5 Continuing Assessment

6.5.1 Weather should not normally influence SNC protective action recommendations for the public except for changes in plume trajectory. The States and Counties are the most knowledgeable concerning current weather conditions and weather forecast information. The States and Counties may incorporate existing or forecast weather in their decisions regarding implementation of recommended protective actions.

6.5.2 Only the MUTUALY AGREED UPON protective action recommendations specified in Attachment 1 should be recommended unless there are obvious relevant factors (e.g., severe natural phenomena like hurricanes) that probably were not anticipated when the PARs were developed and that would make the standard PAR recommendations impractical or obviously non-conservative. In such events, the ED should use judgment as appropriate.

6.5.3 Actual field readings from Field Monitoring Teams should be compared to dose assessment results and used as a dose projection method to validate calculated PARs and to determine whether the plant or dose based protective actions are adequate.

6.5.4 When available, actual sample data from monitored or unmonitored release points should be utilized in conjunction with other dose assessment and projection methods to validate calculated PARs and to determine whether the plant based protective actions are adequate.

6.5.5 VEGP and FNP off-site dose rates may be significantly higher (up to 10 times) due to volatilization of iodine if a steam generator (SG) water level falls below the break point during a SG tube rupture

7.0 PROCESS DESCRIPTION

Guidance is provided in the form of attachments. Attachment 1, Action Checklist for Off-Site PAR Development", Attachment 2, "Farley Site Specific Data Sheets", Attachment 3, "Hatch Site Specific Data Sheets", Attachment 4 "Vogtle Site Specific Data Sheets", and Attachment 5 "PAR Worksheet" direct the initial and supplemental actions.

8.0 RECORDS

Records generated during actual emergencies will be maintained as QA records in accordance with applicable administrative procedure.

9.0 COMMITMENTS

Farley – None
Hatch - 1989301429, 1990303261, 1990303410
Vogtle – 1985304693, 1985304906, 1986309134

Attachment 1
(Page 1 of 3)

* Continuing Activity

Action Checklist for PAR Development

NOTE: ONLY THE MUTUALY AGREED UPON PROTECTIVE ACTIONS SPECIFIED BELOW SHOULD BE RECOMMENDED UNLESS THERE ARE OBVIOUS RELEVANT FACTORS (E.G., SEVERE NATURAL PHENOMENA LIKE HURICANES) THAT PROBABLY WERE NOT ANTICIPATED WHEN THE PARS WERE DEVELOPED AND THAT WOULD MAKE THE STANDARD PAR RECOMMENDATIONS IMPRACTICAL OR OBVIOUSLY NON-CONSERVATIVE. IN SUCH EVENTS, THE ED SHOULD USE JUDGMENT AS APPROPRIATE.

A. INITIAL ACTIONS — Please Check

1. * Precautions and Limitations are applicable in development of Protective Action Recommendations (PARs) in subsequent steps. Attachment 5, Figure 1, "PAR WORKSHEET", may be used to record affected zones or sectors. ☐

2. * Determine General Emergency PARs using the Attachment 1 Flowchart. ☐
   - PAR 1 – Shelter to 2 miles and 5 mile downwind zones
   - PAR 2 – Evacuate to 2 miles and 5 mile downwind zones
   - PAR 3 – Evacuate to 5 miles and 10 mile downwind zones
   - PAR 4 – Guidance for PARs Beyond the 10 Mile EPZ

CAUTION - PAR Revisions must include previous PARs

3. For PAR 1, 2, and 3, determine the affected zones using Site specific Table 1. An electronic program may also be used. ☐

NOTE: Once conditions requiring a PAR change are available, PARs should be developed as soon as possible. (The expectation for development is 15 minutes after the change in conditions.)

4. Communicate developed PARs to the ED for review and approval. ☐

NOTE: Once PARs are developed they should be communicated to appropriate agencies as soon as possible. (The expectation for communication is 15 minutes after development, as directed by position specific instructions.)

5. Communicate ED approved PARs to offsite agencies using appropriate procedural guidance. On the ENN Form ensure that the following PAR information is selected: ☐
   - Select block 5.B and record the "Evacuate" zones OR select block 5.C and record the "Shelter" zones
   - Select block 5.D
   - IF PAR 4 selected THEN additionally select block 5.E "Other" and provide "Affected Sectors" and "To Miles".

* Continuing Activity

Attachment 1
(Page 2 of 3)

Action Checklist for PAR Development (Cont)

B. SUPPLEMENTAL ACTIONS — Please Check

1. * Continue assessment actions applying applicable Precautions & limitations. ☐

2. * IF a release is in progress THEN it is appropriate to dispatch Field Monitoring Teams (FMT) to downwind and adjacent areas as soon as possible. FMT data should be used to validate calculated exposure rates by comparison with actual field exposure rates to ensure issued PARs remain conservative. ☐

3. * For PAR 4, determine the affected sectors using Site specific Table 2. The following considerations apply when developing PARs beyond 10 miles: ☐
   - IF a release is in progress and dose assessment calculations indicate a possible need to issue PARs beyond 10 miles, THEN it is appropriate to re-perform dose assessment calculations to verify calculation assumptions and accuracy prior to issuing PARs beyond 10 miles.
   - Use any available FMT readings, IF available, to validate accuracy of the projection model prior to issuing PARs beyond 10 miles.
   - IF dose assessment calculations indicate the need to recommend actions beyond 10 miles, THEN consult with affected State agency(s) to compare/ validate model assumptions prior to issuing PARs beyond 10 miles.

4. * IF conditions requiring PAR 1 entry are eliminated or dose projections change such that additional PARs are required THEN return to the Initial Actions section. Once conditions requiring PAR change are available, PARs should be developed as soon as possible. (The expectation for development is 15 minutes after the change in conditions.) Once PARs are developed they should be communicated to appropriate agencies as soon as possible. (The expectation for communication is 15 minutes after development, as directed by position specific instructions.) ☐

5. * Apply dose projection results in continuing assessment activities. Dose assessment results should be used to refine (but not reduce) protective action recommendations after adequate data becomes available. ☐

6. Utilize real time meteorological and effluent radiation monitor readings in continuing assessment activities. IF radiation monitor readings provide sufficient data for assessment, THEN, it is NOT appropriate to wait for field monitoring data to become available to confirm or expand a PAR within the 10-mile EPZ. ☐

7. Dose projections are NOT required to support the decision process in development of the plant condition based PARs utilizing the PAR flowchart if no release is in progress. It is expected that a dose projection will be performed as soon as practicable at a General Emergency with a release in progress to determine if PAR change is needed. ☐

Attachment 1, Flowchart (Page 3 of 3)

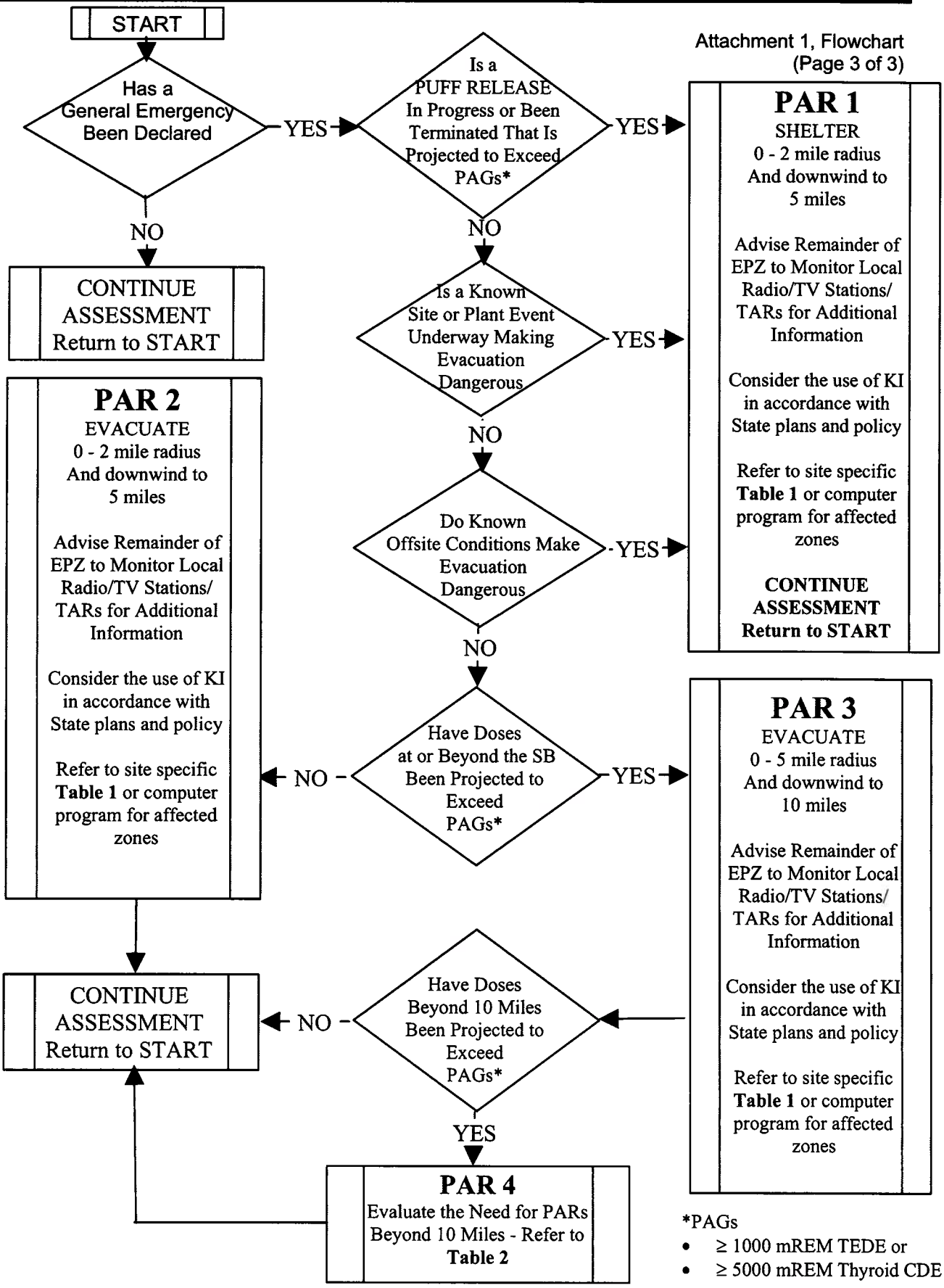

*PAGs
- ≥ 1000 mREM TEDE or
- ≥ 5000 mREM Thyroid CDE

Attachment 2
Table 1

PLANT FARLEY
AFFECTED ZONES FOR PROTECTIVE ACTION RECOMMENDATIONS

	PAR 1 and 2	PAR 3
WIND DIRECTION FROM (degrees)	AFFECTED ZONES	AFFECTED ZONES
N, > 349 - 11	A, B5, C5, J5, K5	A, B5, C5, D5, E5, F5, I5, J5, K5, B10, C10, K10
NNE, >11 – 34	A, B5, C5, D5, K5	A, B5, C5, D5, E5, F5, I5, J5, K5, B10, C10, D10
NE, >34 – 56	A, B5, C5, D5	A, B5, C5, D5, E5, F5, I5, J5, K5, B10, C10, D10
ENE, >56 – 79	A, C5, D5, E5	A, B5, C5, D5, E5, F5, I5, J5, K5, C10, D10, E10
E, >79-101	A, D5, E5, F5	A, B5, C5, D5, E5, F5, I5, J5, K5, C10, D10, E10
ESE, >101 – 124	A, D5, E5, F5	A, B5, C5, D5, E5, F5, I5, J5, K5, D10, E10, F10
SE, >124-146	A, E5, F5	A, B5, C5, D5, E5, F5, I5, J5, K5, E10, F10
SSE, >146 - 169	A, E5, F5, I5	A, B5, C5, D5, E5, F5, I5, J5, K5, E10, F10, G10
S, >169 - 191	A, E5, F5, I5	A, B5, C5, D5, E5, F5, I5, J5, K5, F10, G10, H10
SSW, >191 - 214	A, F5, I5	A, B5, C5, D5, E5, F5, I5, J5, K5, F10, G10, H10, I10
SW, >214-236	A, F5, I5, J5	A, B5, C5, D5, E5, F5, I5, J5, K5, F10, G10, H10, I10, J10
WSW, >236-259	A, I5, J5	A, B5, C5, D5, E5, F5, I5, J5, K5, G10, H10, I10, J10
W, >259 – 281	A, I5, J5	A, B5, C5, D5, E5, F5, I5, J5, K5, H10, I10, J10, K10
WNW, >281 – 304	A, I5, J5, K5	A, B5, C5, D5, E5, F5, I5, J5, K5, I10, J10, K10
NW, >304 - 326	A, B5, J5, K5	A, B5, C5, D5, E5, F5, I5, J5, K5, B10, J10, K10
NNW, >326 - 349	A, B5, C5, J5, K5	A, B5, C5, D5, E5, F5, I5, J5, K5, B10, K10

Attachment 2
Table 2

PLANT FARLEY
GUIDANCE FOR PARS BEYOND THE 10 MILE EPZ

1. Calculate the Evacuation Distance by determining the maximum Projected Distance where MIDAS dose projections exceed PAGs and adding 5 miles to the projected distance.
   _____ **Projected Distance (miles) + 5 miles =** _____ **Evacuation Distance (miles)**

2. Determine the affected sectors for the current 15 minute average (From) wind direction
   _____ **Affected Sectors**

3. Recommend Evacuation from 10 miles to the Evacuation Distance (calculated in step 1) for the Affected Sectors (determined in step 2).

4. Check Line 5, Item E – Other on the Emergency Notification Form and record the recommended sectors and distance range in miles for Evacuation. (Note: Refer to 50 mile IPZ map as necessary)

PAR 4

WIND DIRECTION FROM (degrees)	AFFECTED SECTORS
N, > 349 - 11	H, J, K
NNE, >11 – 34	J, K, L
NE, >34 – 56	K, L, M
ENE, >56 – 79	L, M, N
E, >79-101	M, N, P
ESE, >101 – 124	N, P, Q
SE, >124-146	P, Q, R
SSE, >146 - 169	Q, R, A
S, >169 - 191	R, A, B
SSW, >191 - 214	A, B, C
SW, >214-236	B, C, D
WSW, >236-259	C, D, E
W, >259 – 281	D, E, F
WNW, >281 – 304	E, F, G
NW, >304 - 326	F, G, H
NNW, >326 - 349	G, H, J

Attachment 3
Table 1

PLANT HATCH
AFFECTED ZONES FOR PROTECTIVE ACTION RECOMMENDATIONS

	PAR 1 and 2	PAR 3
WIND DIRECTION FROM (degrees)	AFFECTED ZONES	AFFECTED ZONES
N, > 349 - 11	A, B5, C5	A, B5, C5, D5, E5, C10, D10, E10
NNE, >11 – 34	A, B5, C5	A, B5, C5, D5, E5, D10, E10, F10
NE, >34 – 56	A, B5, C5	A, B5, C5, D5, E5, E10, F10, G10
ENE, >56 – 79	A, C5	A, B5, C5, D5, E5, E10, F10, G10
E, >79-101	A, C5, D5	A, B5, C5, D5, E5, F10, G10, H10
ESE, >101 – 124	A, C5, D5	A, B5, C5, D5, E5, G10, H10, I10
SE, >124-146	A, C5, D5, E5	A, B5, C5, D5, E5, G10, H10, I10
SSE, >146 - 169	A, C5, D5, E5	A, B5, C5, D5, E5, H10, I10, J10
S, >169 - 191	A, D5, E5	A, B5, C5, D5, E5, I10, J10
SSW, >191 - 214	A, D5, E5	A, B5, C5, D5, E5, I10, J10
SW, >214-236	A, E5	A, B5, C5, D5, E5, J10, K10, L10
WSW, >236-259	A, B5, E5	A, B5, C5, D5, E5, J10, K10, L10
W, >259 – 281	A, B5, E5	A, B5, C5, D5, E5, B10, K10, L10
WNW, >281 – 304	A, B5, E5	A, B5, C5, D5, E5, B10, C10, D10, K10, L10
NW, >304 - 326	A, B5	A, B5, C5, D5, E5, B10, C10, D10
NNW, >326 - 349	A, B5, C5	A, B5, C5, D5, E5, B10, C10, D10, E10

Attachment 3
Table 2

PLANT HATCH
GUIDANCE FOR PARS BEYOND THE 10 MILE EPZ

1. Calculate the Evacuation Distance by determining the maximum Projected Distance where MIDAS dose projections exceed PAGs and adding 5 miles to the projected distance.
   _____ **Projected Distance (miles) + 5 miles =** _____ **Evacuation Distance (miles)**

2. Determine the affected sectors for the current 15 minute average (From) wind direction
   _____ **Affected Sectors**

3. Recommend Evacuation from 10 miles to the Evacuation Distance (calculated in step 1) for the Affected Sectors (determined in step 2).

4. Check Line 5, Item E – Other on the Emergency Notification Form and record the recommended sectors and distance range in miles for Evacuation. (Note: Refer to 50 mile IPZ map as necessary)

PAR 4

WIND DIRECTION FROM (degrees)	AFFECTED SECTORS
N, > 349 - 11	H, J, K
NNE, >11 – 34	J, K, L
NE, >34 – 56	K, L, M
ENE, >56 – 79	L, M, N
E, >79-101	M, N, P
ESE, >101 – 124	N, P, Q
SE, >124-146	P, Q, R
SSE, >146 - 169	Q, R, A
S, >169 - 191	R, A, B
SSW, >191 - 214	A, B, C
SW, >214-236	B, C, D
WSW, >236-259	C, D, E
W, >259 – 281	D, E, F
WNW, >281 – 304	E, F, G
NW, >304 - 326	F, G, H
NNW, >326 - 349	G, H, J

Attachment 4
Table 1

PLANT VOGTLE
AFFECTED ZONES FOR PROTECTIVE ACTION RECOMMENDATIONS

	PAR 1 and 2	PAR 3
WIND DIRECTION FROM (degrees)	AFFECTED ZONES	AFFECTED ZONES
N, > 349 - 11	A, B5, C5, SRS to 2 Miles	A, B5, C5,D5, E5, F5, B10, C10, D10, SRS to 5 Miles
NNE, >11 – 34	A, B5, C5, SRS to 2 Miles	A, B5, C5, D5, E5, F5, C10, D10, SRS to 5 Miles
NE, >34 – 56	A, B5, C5, D5, SRS to 2 Miles	A, B5, C5, D5, E5, F5, C10, D10, E10, SRS to 5 Miles
ENE, >56 – 79	A, C5, D5, E5, SRS to 2 Miles	A, B5, C5, D5, E5, F5, D10, E10, F10,SRS to 5 Miles
E, >79-101	A, C5, D5, E5, F5, SRS to 2 Miles	A, B5, C5, D5, E5, F5, D10, E10, F10, SRS to 5 Miles
ESE, >101 – 124	A, D5, E5, F5, SRS to 2 Miles	A, B5, C5, D5, E5, F5, E10, F10, G10,SRS to 5 Miles
SE, >124-146	A, D5, E5, F5, SRS to 2 Miles	A, B5, C5, D5, E5, F5, E10, F10, G10,SRS to 10 Miles
SSE, >146 - 169	A, E5, F5, SRS to 5 Miles	A, B5, C5, D5, E5, F5, F10, G10, SRS to 10 Miles
S, >169 - 191	A, F5, SRS to 5 Miles	A, B5, C5, D5, E5, F5, F10, G10, SRS to 10 Miles
SSW, >191 - 214	A, F5, SRS to 5 Miles	A, B5, C5, D5, E5, F5, G10, SRS to 10 Miles
SW, >214-236	A, SRS to 5 Miles	A, B5, C5, D5, E5, F5, SRS to 10 Miles
WSW, >236-259	A, SRS to 5 Miles	A, B5, C5, D5, E5, F5, H10, SRS to 10 Miles
W, >259 – 281	A, B5, SRS to 5 Miles	A, B5, C5, D5, E5, F5, B10, H10, SRS to 10 Miles
WNW, >281 – 304	A, B5, SRS to 5 Miles	A, B5, C5, D5, E5, F5, B10, C10, H10, SRS to 10 Miles
NW, >304 - 326	A, B5, SRS to 5 Miles	A, B5, C5, D5, E5, F5, B10, C10, H10, SRS to 10 Miles
NNW, >326 - 349	A, B5, SRS to 2 Miles	A, B5, C5, D5, E5, F5, B10, C10, D10, SRS to 5 Miles

Attachment 4
Table 2

PLANT VOGTLE
GUIDANCE FOR PARS BEYOND THE 10 MILE EPZ

1. Calculate the Evacuation Distance by determining the maximum Projected Distance where MIDAS dose projections exceed PAGs and adding 5 miles to the projected distance.
   _____Projected Distance (miles) + 5 miles = _____ Evacuation Distance (miles)

2. Determine the affected sectors for the current 15 minute average (From) wind direction
   _____ Affected Sectors

3. Recommend Evacuation from 10 miles to the Evacuation Distance (calculated in step 1) for the Affected Sectors (determined in step 2).

4. Check Line 5, Item E – Other on the Emergency Notification Form and record the recommended sectors and distance range in miles for Evacuation. (Note: Refer to 50 mile IPZ map as necessary)

PAR 4

WIND DIRECTION FROM (degrees)	AFFECTED SECTORS
N, > 349 - 11	H, J, K
NNE, >11 – 34	J, K, L
NE, >34 – 56	K, L, M
ENE, >56 – 79	L, M, N
E, >79-101	M, N, P
ESE, >101 – 124	N, P, Q
SE, >124-146	P, Q, R
SSE, >146 - 169	Q, R, A
S, >169 - 191	R, A, B
SSW, >191 - 214	A, B, C
SW, >214-236	B, C, D
WSW, >236-259	C, D, E
W, >259 – 281	D, E, F
WNW, >281 – 304	E, F, G
NW, >304 - 326	F, G, H
NNW, >326 - 349	G, H, J

Attachment 5
Figure 1

PAR WORKSHEET

INSTRUCTIONS:

1. Check the box for the applicable PAR (1, 2, 3, or 4).
2. Record the 15 minute average "wind direction from" for the selected PAR.
   Use met instrumentation corresponding to primary release point(s) (BWR) OR ground level release (PWR).
3. Use the applicable "**Site Specific**" PAR table (Table 1 or 2) to determine the affected zones.

CAUTION:	PAR Revisions must include previous PARs.

On the ENN Form for the selected PAR:

- Select block 5.B and record the "Evacuate" zones OR select block 5.C and record the "Shelter" zones"
- Select block 5.D
- IF PAR 4 is selected, THEN additionally select block 5.E "Other" and provide "Affected Sectors" and "To Miles"

☐ **PAR 1**	**Wind direction from**	
	ENN Line 5 [C] Shelter Zones	
	ENN Line 5 [D]	Advise remainder of EPZ to Monitor Local Radio/TV Stations /Tone Alert Radios. Consider the use of KI (Potassium Iodide) in accordance with State Plans and Policy

☐ **PAR 2**	**Wind direction from**	
	ENN Line 5 [B] Evacuate Zones	
	ENN Line 5 [D]	Advise remainder of EPZ to Monitor Local Radio/TV Stations /Tone Alert Radios. Consider the use of KI (Potassium Iodide) in accordance with State Plans and Policy

☐ **PAR 3**	**Wind direction from**	
	ENN Line 5 [B] Evacuate Zones	
	ENN Line 5 [D]	Advise remainder of EPZ to Monitor Local Radio/TV Stations /Tone Alert Radios. Consider the use of KI (Potassium Iodide) in accordance with State Plans and Policy

☐ **PAR 4**	**Wind direction from**	
	ENN Line 5 [B] Evacuate Zones	
	ENN Line 5 [D]	Advise remainder of EPZ to Monitor Local Radio/TV Stations/ Tone Alert Radios. Consider the use of KI (Potassium Iodide) in accordance with State Plans and Policy
	ENN Line 5 [E] OTHER	Evacuate Affected Sectors _____ to _____miles

Approval: _____ _____/_____

Emergency Director **Date/Time**