ES-301-2 **Control Room/In-Plant Systems Outline**

Facility: Farley Nuclear Plant	Date of Examination: May 9, 2011
Exam Level: **RO** ☒ **SRO-I** ☒ SRO-U-☐	Operating Test No.: FA2011301

Control Room Systems@ **(8 for RO); (7 for SRO-I);** (2 or 3 for SRO-U, including 1 ESF)

System / JPM Title	Type Code*	Safety Function
a. CRO-033A : Perform Corrective Actions For Recovery Of A Misaligned Rod 003AA1.02 RO-3.6 SRO-3.4 001A2.11 RO-4.4 SRO-4.7 001A4.06 RO-2.9 SRO-3.2 --- **Description:** Rod re-alignment activities of AOP-19 (disconnect switches and rod withdrawal to match Rod Height). Alternate path: Rod motion will trigger 2 dropped rods malfunction which will require actuation of RX trip and E-0 IOA. Students will use AOP-19 to disconnect the rods so the two misaligned rods can be moved back into alignment. The rods will be placed in Bank D and when the rods are moved the 2 rods will drop into the core. The student will trip the reactor and perform the IOAs of EEP-0.	A,D,E,S	1 Est: 15 min
b. CRO-343C: Establish Letdown as required following a Spurious Letdown Isolation Signal and Stabilize Pressurizer Level 004A2.07 RO-3.4 SRO-3.7 004A4.05 RO-3.6 SRO-3.1 --- **Description:** Attempt to align Letdown with a malfunction on PK-145 which will prevent success. Alternate path is to align EXCESS letdown. Students will use Step 9 of AOP-16 to place letdown back in service. At step 9.13 to place PCV-145 in manual and 50%, the controller will fail. The student will use the RNO column to go to step 10 and then the RNO column to place excess letdown in service per SOP-2.7 by opening two AOVs and then adjusting an AOV using a potentiometer to cause temperature to rise and level off at 165°F.	A, M, S	2 Est: 15 min

c. CRO-333D modified: Perform The Required Actions For Cold Leg Recirculation during a Large Break LOCA 011 EA1.11 RO-4.2 SRO-4.2 **Description:** During a LB LOCA the RWST level drops to 12.5 feet. E-1, Loss of reactor or secondary Coolant procedure sends the operator to ESP-1.3, Transfer to Cold Leg Recirculation. 1A and 1B RHR pumps are aligned to the ctmt sump removing the suction from the RWST. The cross connect valves are closed on the HHSI pump suctions and then 8706A is opened. Since the valve WILL NOT remain open, ESP-1.3 has the operator secure the A Train HHSI pump. This still leaves 2 LHSI pumps running and 1 HHSI pump running. Later in the procedure, since the A Train HHSI pump is not running, The RNO column is used to open MOV-8885, CHG PUMP RECIRC TO RCS COLD LEGS and close MOVs-8803A and B, HHSI TO RCS CL ISO to prevent run out on the running chg pump. At no time is core cooling lost since at least one of the LHSI pumps are always running and one charging pump will always be running. Discussed with Ron Aiello and we agreed this was a safety Function 3 based on these are actions taken during a LB LOCA. Ability to operate and monitor the following as they apply to a Large Break LOCA EA1.11 Long-term cooling of core.	A, M, E, S	3 Est: 15 min
d. CRO-NEW: Stop the RCP with a degraded seal per the guidance of step 8 of AOP-4.1 and complete the necessary IOAs of AOP-4.0 upon stopping the RCP. 003A2.02 RO-3.7 SRO-3.9 015/017AA1.05 RO-3.8 SRO-3.8 015/017AA1.08 RO-3.0 SRO-2.9 --- **Description:** Stop 1B RCP while in MODE 3 per AOP-4.1, step 8. The plant is in Mode 3 and AOP-4.1 entered due to a seal failure. Step 17 requires the student to increase seal inj flow to > 9 gpm, then secure the RCP, then close the spray valve for that RCP and close the seal Ikoff AOV 8141A, B or C. Then they are to enter AOP-4.0. AOP-4.0 has the student control/secure AFW to the RCPs. The FCV to the affected SG loop will fail open and the student will have to use the RNO column to isolate AFW flow to the SG using an MOV. Since these MOVs are normally powered down, they will have to call to have power supplied to the MOV and then close the MOV.	A, E, L, N, S	4P Est: 10 min
e. Isolate SW to the **affected** CNMT Cooler using SOP-12.1 section 4.6 (ARP BB1 Step 6.1): 022A2.05 RO-3.1 SRO-3.5 W/E015EA1.1 RO-2.9 SRO-3.0 **Description:** plant conditions require 2 fan coolers running which makes this a critical task, (High pressure with no Spray pumps, SI, with LOSP) o **isolate SW to the running, leaking fan** (at least one) and o **start (at least) one fan** in its place to satisfy the safety function. SOP-12.1 step 4.6.1 will have the student close the inlet and outlet MOV to isolate the cooler, stop the fan and verify one fan is selected to auto start.	E, N, S	5 Est: 12 min

f. CRO-415A, Start the station Blackout D/G 064A4.06 RO-3.9 SRO-3.9 055EA1.02 RO-4.3 SRO-4.4 --- **Description:** The student will start the 2C DG using AOP-5.1. The load shed check will be required to be done and several components will have to be aligned properly. The DG Mode selector switches will be aligned, the DG started and due to the SI signal present, the sequencer will NOT run. The student will be required to start one SW pump to supply cooling to the DG.	D, E, S	6 Est: 10 min
g. CRO-328B: Restore IA to containment following SBLOCA. 065AA1.03 RO-2.9 SRO-3.1 --- **Description:** Restore an Air compressor and IA alignment. **Alternate path:** Malfunction prevents automatic sequencing/start of 1C air compressor power supply, requires manual alignment of LC 1A. Once 1C Air compressor is started, then align air to containment using valves on BOP. The student will use ESP-1.2, attach 1 step 1.11 to align power to the 1A air compressor and start it. This will involve closing 2 breakers on the EPB and then opening 3 AOVs on the BOP panel to align air to containment.	A, D, E, S	8 Est: 10 min
h. CRO-395D, Display individual CETC values 017A4.01 RO-3.8 SRO-4.1 --- **Description:** This will involve operating the CETC display on the MCB using SOP-68. There are several buttons that will be depressed, Tmax/CET button, $\frac{SUBMODE}{1st\ /\ 2nd}$ button, the $\frac{SUBMODE\ ACK}{ALARM\ ACK}$ button, all pushed in a specific sequence and multiple times to display the value of one CETC temperature.	D, ~~E~~, S (not necessary to be E task)	**RO ONLY** 7 EST 7 min

In-Plant Systems@ (3 for RO); (3 for SRO-I); (3 or 2 for SRO-U)		
i. SO-590, Place The SJAE Filtration Unit In Service during a Steam Generator Tube Leak **Description:** Farley procedure AOP-2.0, Steam Generator Tube Leak, step 6 says, **"Place the SJAE filtration unit in service using FNP-1-SOP-28.5, CONDENSER AIR REMOVAL SYSTEM." This task is only done during a SG tube and is only referenced in AOP-2.0.** Discussed with Ron Aiello and we agreed this was a safety Function 3 based on these are actions only taken during a SG Tube leak. **In** APE 037 Steam Generator (S/G) Tube Leak, AA1, There are multiple tasks that say "ability to operate the air ejector filtration system"; for example: AA1.04 Condensate air ejector exhaust radiation monitor and failure indicator AA1.05 Radiation monitor for auxiliary building exhaust processes AA1.02 Condensate exhaust system AA2.08 Failure of Condensate air ejector exhaust monitor This is equipment ONLY operated when a SG tube leak is in progress and only for the purpose of filtering the exhaust of the SJAE system This will simulate operating one handswitch on the SJAE panel, verify positions of several AOVs and operate one manual valve. (2 Critical Tasks) 037AA1.02 RO-3.1 SRO-2.9	D, E	3 EST: 5 min
j. SO-449, Supply EMERGENCY AIR to SG ARVs from Emergency Air Compressors during a Loss of instrument air Discussed with Ron Aiello and we agreed this task will better meet the needs of this exam. It is a safety function 8 since there is a loss of Instrument air and the SG ARVs are required to be operated. One method to operate the ARVs is to align the EACs to the ARVs. The KA is APE065 Loss of Instrument Air AA1: Ability to operate and / or monitor the following as they apply to the Loss of Instrument Air: AA1.04 Emergency air compressor **Description:** This task is to start two EACs by operating two handswitches, and then operate 6 valves to supply air to the ARVs. These are ALL located in the nonrad side of the AUX bldg neat the EACs. APE065AA1.04 RO-3.5 SRO-3.4	D, E	8 Est: 10 min
k. SO-95B, Align the Recycle Holdup Tank To Drain To Waste Holdup Tank 068K1.07 RO-2.7 SRO-2.9**Description:** The task is to drain the Recycle Holdup Tank to the WHT. The RHT is a primary coolant drain tank with a volume of 28,000 gallons. This tank is routinely drained to the WHT for disposal and is highly contaminated release. This will simulate operating one pull to lock handswitch and operate 4 manual valves 068K1.07 RO-2.7 SRO-2.9	D, R	9 Est: 10 min

@	All RO and SRO-I control room (and in-plant) systems must be different and serve different safety functions; all 5 SRO-U systems must serve different safety functions; in-plant systems and functions may overlap those tested in the control room.

* Type Codes	Criteria for RO / SRO-I	
(A)lternate path	4-6	**[5/5]**
(C)ontrol room		**[0]**
(D)irect from bank	≤ 8	**[7/6]**
(E)mergency or abnormal in-plant	≥ 1	**[9 8/8]**
(EN)gineered safety feature	- (control room system)	**[N/A]**
(L)ow-Power / Shutdown	≥ 1	**[1]**
(N)ew or (M)odified from bank including 1(A)	≥ 2	**[4/4]—W/ 3(A)**
(P)revious 2 exams	≤ 3 (randomly selected)	**[0]**
(R)CA	≥ 1	**[1/1]**
(S)imulator		**[8/7]**

SIMULATOR JPM A.

CRO-033A
TITLE: Perform The Corrective Actions Required For Recovery Of A Misaligned Rod
EVALUATION LOCATION: ☒ **SIMULATOR** ☐ CONTROL ROOM ☐ CLASSROOM
PROJECTED TIME: 15 MIN SIMULATOR IC NUMBER: IC-218
☒ ALTERNATE PATH ☐ TIME CRITICAL ☐ PRA

JPM DIRECTIONS:

1. Examinee may be given an opportunity to **preview** the task prior to entering the Simulator to lower the required time to conduct the task.
2. Examinee will be provided a marked up copy of FNP-1-AOP-19.0 Attachment 1. The markup shall be as follows:
   a. STEP 1 and STEP 2 will be signed off with appropriate place keeping per plant standards.
   b. The conditional steps which do not apply will be pre-marked as not applicable ("N/A") as expected per plant standards.
3. The actions of this task are intended to be performed on an Active Simulator in which the examinee may diagnose the correctness of system response to his/her actions and respond to any abnormal conditions which may arise.

TASK STANDARD: Upon successful completion of this JPM, the examinee will:

- Correctly complete the applicable actions of FNP-1-AOP-19.0.

Examinee:	
Overall JPM Performance:	**Satisfactory** ☐ **Unsatisfactory** ☐
Evaluator Comments (attach additional sheets if necessary)	

EXAMINER: _____

Developer	Name: Howard Fitzwater	Date: 1/6/2011
NRC Approval	SEE NUREG 1021 FORM ES-301-3	

Simulator Setup

EVENT DESCRIPTION	ACTION	DETAILS
Reset into IC-218 for JPM "A"		
Put OPS group on MCB CRT Acknowledge computer alarms		
Run / Freeze Simulator		
Acknowledge annunciators		
Turn Horns ON		
Provide AOP-19.0, v27.0, with Step 19 marked as in progress.		
Verify CONTROL ROD Disconnect switch box is unobstructed.		
Verify RODS updated.		
Setup IC-218*		
RST IC-121 (JPM CRO-033A) contain the following necessary malfunctions/triggers: **Expert cmd:** **Trgset 1 "MCRFNS(45) < 201"** **IMF MAL-ROD545 (1)** **IMF MAL-ROD547 (1)**	*	
Prevent an Automatic Rx trip insert **CMFmalf/cBKRXTRP_cc5/OPEN** **CMFmalf/cBKRXTRP_cc6/OPEN**	*	
SNP 218	*	

CONDITIONS

When I tell you to begin, you are to **PERFORM THE CORRECTIVE ACTIONS REQUIRED FOR RECOVERY OF A MISALIGNED ROD**. The conditions under which this task is to be performed are:

a. The plant was in MODE 1, ramping down from 100% when the ramp was stopped at ~72% power due to a Control Rod misalignment.
b. DRPI indication for rod F6 indicates 204 steps.
c. DRPI indication for all other Bank D rods indicates 186 steps.
d. The cause of the misalignment was a blown fuse and it has been replaced.
e. AOP-19.0, Malfunction of Rod Control System, is in progress.
f. Maintenance personnel are not required to be notified prior to rod motion.
g. You have been directed to complete ATTACHMENT 2 of AOP-19.0 beginning with step 3 while complying with the following realignment plan:
   1. Restoration of Rod Alignment to be conducted between 70% and 80%.
   2. The rate of control rod movement during recovery shall be conducted at 3 step increments, to achieve alignment within TS limits within the next 30 minutes.
   3. Movement of other control rods to support recovery is NOT permitted.

INITIATING **CUE**, "You may begin."

EVALUATION CHECKLIST

ELEMENTS:	STANDARDS:	RESULTS: (CIRCLE)
START TIME:		
* 1. Align lift coil disconnect switches. (BOP) (Attachment 2 step 3) For rod re-alignment, align switches to DISCONNECT position for all non-affected rods in the affected bank.	**Locate and Position** the lift coil disconnect switches for **ALL Control Bank D** rods ***EXCEPT*** rod F6 (7 total) to the up-**"DISCONNECT"** position. **Bottom row** of Switches. HIGHLIGHTED indicates F6 position in that row. 	S / U
(Attachment 2 step 4) 2. Verify the ROD CONTROL BANK SELECTOR SWITCH is selected to the affected bank.	**CHECKs** the rod control bank selector switch and **IDENTIFIES** that it is selected to **CONTROL BANK D**.	S / U

ELEMENTS:	STANDARDS:	RESULTS: (CIRCLE)
(Attachment 2 step 5) 3. IF required notify maintenance personnel when rod movement will begin.	This step is Pre-marked as "Not Applicable"; initial conditions identify this NOT required. **CUE if notification attempted:** "Maintenance personnel acknowledge."	

NOTE:
- Performing element 4 (procedure step 6) will result in FF1, Rod Control Urgent Failure, to actuate; The **UNAFFECTED group** step counter will not actuate when rods are moved.
- Once ROD F6 inserted to a height of 201 steps, Control Rods F6 and K10 fall into the core.

If requested prior to rod motion CUE: "Another operator will adjust Turbine load when required."

	(Attachment 2 step 6) * 4. Rod Alignment For rod re-alignment, adjust misaligned rod to agree with associated group DRPI indication at a rate determined in step 1.1.	**POSITIONS** IN-HOLD-OUT to the IN position **OBSERVES** the GREEN "RODS IN" light lit, CBD GP1 step counter counts down	S / U
	5. IDENTIFIES symptoms of a dropped rod are present and AOP-19 re-entered at step 1. INDICATIONS: • FE3, FE4, & FF1 in alarm • Rod Bottom LEDs are lit for rods F6 AND K10 • Reactor Power lowers ~2% • Tavg lowers 2°F	INDENTIFIES dropped rod and **Enters AOP-19 at step 1** OR **UTILIZES ARP-1.6, FE3 OR FE4, step 2 response, which reads**: "IF two or more rods drop in Mode 1 or during reactor startup, THEN perform the following: - **Manually trip the reactor."**	S / U

NOTE:
- AOP-19.0 steps 1 and 2 are IMMEDIATE OPERATOR actions.
- Elements 6 and 7 will not be completed IF ARP-1.6, FE3 OR FE4 is implemented instead.

ELEMENTS:	STANDARDS:	RESULTS: (CIRCLE)
(AOP-19.0 step 1) 6. Verify NO load change in progress.	**Checks DEH** and/or Generator Load to determine No load change in progress.	S / U
(AOP-19.0 step 2) 7. IF unexplained rod motion occurring, THEN stop rod motion. a. IF rod control in AUTO, THEN place rod control in MANUAL. b. IF rod control in MANUAL, THEN place rod control in AUTO i. IF AUTO rod motion due to TAVG/TREF mismatch, THEN verify rod motion stops when TAVG is within 1 degree of TREF c. IF unexplained rod motion NOT stopped, THEN Trip the reactor	**Evaluates and determines** that NO unexplained rod motion is occurring. This step is Not Applicable.	S / U
(AOP-19.0 step 3 Also FE3&FE4 step 2) * 8. Check that no dropped rod(s) exist(s) in Mode 1 OR during a reactor startup. a. **IF MORE THAN ONE dropped rod exists**, THEN perform the following: **i. Trip the Reactor.** ii. Go to FNP-1-EEP-0, REACTOR TRIP OR SAFETY INJECTION.	IDENTIFIES two rods dropped and **TRIPS THE REACTOR**.	S / U

____ STOP TIME

Terminate when the Reactor is tripped.

CRITICAL ELEMENTS: Critical Elements are denoted with an asterisk (*) before the element number.

GENERAL REFERENCES:

1. PROCEDURE: FNP-1-AOP-19.0, V 27.0
   FNP-1-ARP-1.6, V67.0

2. K/As:

003AA1.02	RO-3.6	SRO-3.4
001A2.11	RO-4.4	SRO-4.7
001A4.06	RO-2.9	SRO-3.2

GENERAL TOOLS AND EQUIPMENT:

Provide/Acquire:

1. A pre-marked AOP-19.0 Attachment 1 **will be provided as described in the JPM instructions.**
2. AOP-19.0 main body will be acquired from Simulator

Critical ELEMENT justification:

STEP **Evaluation**

1. CRITICAL for completion of the assigned task
   - Without proper alignment of the disconnect switches, either rod misalignment would be made worse, or the task could not be completed as directed.
2. Not critical since there is no action required (condition checked is as found)
3. Not critical since the initial conditions state that this is NOT required.
4. CRITICAL to accomplish the assigned TASK's objective
   - This is the original objective (task) directed. IF this task is not completed within the 30 min window, then the task could not be completed.
5. Not critical because the RX trip is identified as CRITICAL in element 8; Procedure selection is not important and a RX trip may be conducted from memory since the reactor is outside of design limits.
6. Not critical since there is NO action required.
7. Not critical since no action should be taken, and the only movable D bank rod has dropped.
8. CRITICAL for the operation within design limits.

COMMENTS:

1. Task is intended to terminate when the RX is tripped; this provides a natural stopping point since a procedure transition would then be required. Completion of E-0 immediate operator actions would be a secondary natural stopping point.
2. An automatic Rx trip set point would NOT be exceeded but a Manual RX trip is required. The Automatic RX trip is, however, disabled for this JPM to ensure the Manual RX trip remains critical in **All** possible cases.

CONDITIONS

When I tell you to begin, you are to **PERFORM THE CORRECTIVE ACTIONS REQUIRED FOR RECOVERY OF A MISALIGNED ROD**. The conditions under which this task is to be performed are:

a. The plant was in MODE 1, ramping down from 100% when the ramp was stopped at ~72% power due to a Control Rod misalignment.
b. DRPI indication for rod F6 indicates 204 steps.
c. DRPI indication for all other Bank D rods indicates 186 steps.
d. The cause of the misalignment was a blown fuse and it has been replaced.
e. AOP-19.0, Malfunction of Rod Control System, is in progress.
f. Maintenance personnel are not required to be notified prior to rod motion.
g. You have been directed to complete ATTACHMENT 2 of AOP-19.0 beginning with step 3 while complying with the following realignment plan:
    1. Restoration of Rod Alignment to be conducted between 70% and 80%.
    2. The rate of control rod movement during recovery shall be conducted at 3 step increments, to achieve alignment within TS limits within the next 30 minutes.
    3. Movement of other control rods to support recovery is NOT permitted.

ATTACHMENT 2

MISALIGNED ROD RECOVERY or MAINTENANCE TESTING

NOTE:
- For rods out of alignment by 12 steps or more, the recovery times of Attachment 4 shall apply.
- This attachment may be performed as many times as required for multiple misaligned rods, or as required by a maintenance testing plan.

HBF
__ 1 **Notify appropriate Plant Management and Engineering Support personnel prior to implementing any realignment plan.**

1.1 Any realignment plan should consider the following:

[ ] Determination of how long the rod has been misaligned. 30 minutes
[ ] Power level at which recovery will be performed. 70% to 80% RTP
[ ] Rate of control rod movement during recovery. 3 step increments to be realigned within 30 minutes
[ ] Movement of other control rods to support recovery NOT permitted

HBF
__ 2 **Record misaligned bank step counter indications in reactor operator's log.**

__ 3 **Align lift coil disconnect switches. (BOP)**

3.1 For rod re-alignment, align switches to DISCONNECT position for all non-affected rods in the affected bank.

OR

N/A
3.2 For maintenance testing align disconnect switches as required by the test plan.

[ ] Affected bank _____
[ ] Affected rods _____
[ ] Special considerations: _____
_____
_____

__ 4 **Verify the ROD CONTROL BANK SELECTOR SWITCH is selected to the affected bank.**

N/A 5 **IF required notify maintenance personnel when rod movement will begin.**

ATTACHMENT 2

MISALIGNED ROD RECOVERY or MAINTENANCE TESTING

NOTE:
- Performing step 6 will cause the ROD CONT SYS URGENT FAILURE annunciator FF1 to actuate. This will lock out the non-affected group step counter.
- Performance of steps 6, 7 AND 8 should be a coordinated action.

__ **6 Rod alignment**

6.1 For rod re-alignment, adjust misaligned rod to agree with associated group DRPI indication at a rate determined in step 1.1.

OR

N/A 6.2 For maintenance testing align rods as specified by test plan

[ ] Affected bank _____
[ ] Affected rods _____
[ ] Number of steps to move rod(s)_____
[ ] Direction of rod motion _____
[ ] Special considerations: _____
_____
_____

__ **7 Adjust turbine load to maintain RCS TAVG within 2°F of TREF.**

__ **8 [CA] WHEN the appropriate condition is met, THEN stop rod motion.**

[ ] For rod realignment, When rod DRPI indicates that the affected rod is at the same position as non affected rods,

OR

N/A [ ] When maintenance testing is complete.

__ **9 Place all lift coil disconnect switches to CONNECTED. (BOP)**

__ **10 Reset rod control urgent failure alarm.**

10.1 Depress ROD CONTROL URGENT FAILURE ALARM RESET pushbutton.

10.2 Verify ROD CONT SYS URGENT FAILURE annunciator FF1 - NOT LIT.

ATTACHMENT 2

MISALIGNED ROD RECOVERY or MAINTENANCE TESTING

__ **11 Adjust affected bank group step counters.**

11.1 Depress the recessed pushbutton switches on each step counter located to the right of the digital display.

[ ] The top switch raises the position value.
[ ] The middle switch lowers the position value.
[ ] The bottom switch resets the position value to zero.

11.2 Restore affect bank counter to position recorded in step 2.

__ **12 IF misaligned rod is in a control bank,**
THEN adjust pulse to analog converter. (121 ft, CRDM SWGR room)

12.1 Unlock and open the rear of the DC HOLD cabinet.(CRDM Cab key)

12.2 Place the DISPLAY switch to affected bank.

12.3 Place the AUTOMATIC/MANUAL switch to MANUAL and hold in position.

12.4 Repeatedly depress the UP or DOWN pushbutton to adjust digital display to position recorded in reactor operator's log.

12.5 Release the AUTOMATIC/MANUAL switch.

12.6 Place the DISPLAY switch to OFF.

__ **13 Place ROD CONTROL BANK SELECTOR SWITCH to MANUAL.**

__ **14 Adjust RCS TAVG within 1°F of TREF.**

__ **15 Notify control room that ATTACHMENT 2, MISALIGNED ROD RECOVERY or ~~MAINTENANCE TESTING is complete.~~**

__ **16 Return to procedure step in affect.**

-END-

A. Purpose

This procedure provides actions for response to a malfunction of the rod control system.

This procedure is applicable when the rod control system is capable of rod withdrawal.

B. Symptoms or Entry Conditions

I. This procedure is entered when a malfunction of the rod control system is indicated by any of the following:

a. Significant reactivity insertion due to unexplained rod motion

b. Failure of a control bank to move when required

NOTE:
- A rod is considered "dropped" if it has fallen completely to the bottom of the core. A rod is considered "misaligned" if its DRPI indication disagrees with the group step counter demand position.
- Technical Specifications requires that all individual indicated rod positions be within 12 steps of their group step counter demand position.
- In general the rod group step counters and the DRPI rod position indications should agree within $\pm$ four steps.

---

c. One or more dropped rods in Mode 1 OR during reactor startup.

d. One or more rods misaligned in Mode 1 OR during reactor startup.

e. Complete loss of position indication for one or more rods.

Step	Action/Expected Response	Response Not Obtained

NOTE: Steps 1 and 2 are IMMEDIATE OPERATOR actions.

__ **1 Verify NO load change in progress.**

1 Check for cause of load change.

1.1 IF load rejection in progress or has occurred,
THEN go to FNP-1-AOP-17.0, RAPID LOAD REDUCTION.

1.2 IF secondary leakage is indicated,
THEN go to FNP-1-AOP-14.0, SECONDARY SYSTEM LEAKAGE.

__ **2 IF unexplained rod motion occurring,
THEN stop rod motion.**

2.1 IF rod control in AUTO,
THEN place rod control in MANUAL.

2.1 IF rod control in MANUAL,
THEN place rod control in AUTO

NOTE: In AUTO rod control, rods will step OUT if TAVG less than TREF by at least 1.5 degrees, and Rods will step IN if TAVG greater than TREF by at least 1.5 degrees.

2.1.1 IF AUTO rod motion due to TAVG/TREF mismatch,
THEN verify rod motion stops when TAVG is within 1 degree of TREF

2.2 IF unexplained rod motion NOT stopped,
THEN perform the following.

2.2.1 Trip the reactor

2.2.2 Go to FNP-1-EEP-0, REACTOR TRIP OR SAFETY INJECTION

Page Completed

Step	Action/Expected Response	Response Not Obtained

NOTE: Dropped rod guidance is only applicable in Mode 1 OR during a reactor startup.

__	3	**Check that no dropped rod(s) exist(s) in Mode 1 OR during a reactor startup.**	3 Determine number of dropped rods.: 3.1 IF MORE THAN ONE dropped rod exists, THEN perform the following:. 3.1.1 Trip the Reactor. 3.1.2 Go to FNP-1-EEP-0, REACTOR TRIP OR SAFETY INJECTION. 3.2 IF only ONE dropped rod exists, THEN perform the following: 3.2.1 Verify rod control in manual. 3.2.2 Restore RCS TAVG to programmed value • Adjust turbine load. OR • Adjust RCS boron concentration 3.3 Consult Technical Specifications 3.1.4, 3.1.5, 3.1.6 and 3.2.4. 3.4 Proceed to step 6.

Page Completed

SIMULATOR JPM B.

MODIFIED CRO-343C

TITLE: Establish Letdown As Required Following a Spurious Letdown Isolation Signal and Stabilize Pressurizer Level

EVALUATION LOCATION: ☒ **SIMULATOR** ☐ CONTROL ROOM ☐ CLASSROOM

PROJECTED TIME: 15 MIN SIMULATOR IC NUMBER: IC-219

☒ ALTERNATE PATH ☐ TIME CRITICAL ☐ PRA

JPM DIRECTIONS:

1. The actions of this task are intended to be performed on an Active Simulator in which the examinee may diagnose the correctness of system response to his/her actions and respond to any abnormal conditions which may arise.

TASK STANDARD: Upon successful completion of this JPM, the examinee will:

- Establish excess letdown at the maximum allowed rate and stabilize PZR level using AOP-16.0.

Examinee:	
Overall JPM Performance:	**Satisfactory** ☐ **Unsatisfactory** ☐
Evaluator Comments (attach additional sheets if necessary)	

EXAMINER: _____

Developer	Name: Howard Fitzwater	Date: 1/6/2011
NRC Approval	SEE NUREG 1021 FORM ES-301-3	

Simulator Setup

EVENT DESCRIPTION	ACTION	DETAILS
Reset into IC-219 for JPM "B"		
Put OPS group on MCB CRT Acknowledge computer alarms		
Run / Freeze Simulator		
Acknowledge annunciators		
Turn Horns ON		
Provide AOP-16.0, v17.0, with Steps 9.8 marked as in complete.		
Setup IC-219*		
RST IC-73	*	
Secure Letdown using MCB placard. **LEAVE HV-8152 OPEN.**		
Fill PZR to 53%		
Insert PK-145 output failure stuck at 5 amps. **CNH/PK145-B Demand Failure/ 5**		
SNP 219	*	

CONDITIONS

When I tell you to begin, you are to **ESTABLISH LETDOWN AS REQUIRED FOLLOWING A SPURIOUS LETDOWN ISOLATION SIGNAL AND STABILIZE PRESSURIZER LEVEL.** The conditions under which this task is to be performed are:

a. The Plant has experienced a Penetration Room High Pressure signal which isolated letdown.
b. Pressurizer level is ~ 50% and CCW is aligned to the miscellaneous header.
c. The malfunction has been corrected.
d. HV-8175A & HV-8175B have been opened by the Radside System Operator.
e. All required steps up to step 9.8 have been completed by another operator.
f. You have been directed to establish letdown and stabilize pressurizer level using AOP-16.0, beginning at step 9.9.

INITIATING **CUE**, "You may begin."

EVALUATION CHECKLIST

ELEMENTS:	**STANDARDS:**	**RESULTS: (CIRCLE)**
START TIME:		
(AOP-16.0 step 9.9) * 1. Verify LTDN LINE CTMT ISO valves – OPEN a. LCV459 b. LCV460	LOCATE and **OPEN Both** a. LCV459 b. LCV460	S / U
(AOP-16.0 step 9.10) 2. Initiate minimum charging flow: a. Verify CHG FLOW FK 122 in - MAN b. Establish minimum charging flow based on orifices to be placed on service: i. 1 ORIFICE -18 gpm OR ii. 2 ORIFICES – 40 gpm	**Establishes Charging flowpath and minimum of 18 gpm.** a. Checks FK-122 in Manual b. OPENS FK-122 to establish a **MINIMUM of 18 gpm** on FI-122	S / U

ELEMENTS:	STANDARDS:	RESULTS: (CIRCLE)

NOTE:
- FI-150, Letdown Flow, would normally be expected to rise after a short time delay after completion of element 3. The indications driving the re-isolation of letdown may be delayed momentarily while the piping refills/pressurizes.
- A failure is inserted on PK-145 which prevents it from responding to the demand from PK-145 controller.
- Completing Element 3 will initiate DE3 & DE4 alarm.

(AOP-16.0 step 9.11)

* 3. Establish approximately 60 gpm letdown flow by OPENING:

a. HV8149B

OR

b. HV8149C

OPENS either HV8149B **OR** HV8149C.
OBSERVES the red light LIT

S / U

RNO action:

IF no letdown flow can be established, THEN proceed to Step 10.

RNO action may or may not be implemented, IF implemented then **Element 7 must be performed prior to the satisfactory completion of the task**. RNO action directs the operator to procedure STEP 10, which would be appropriate IF HV8149B&C are re-closed first.

(AOP-16.0 step 9.12)

4. [CA] IF all backup heaters energized due to pressurizer level deviation. THEN verify two sets of backup heaters in ON prior to level deviation clearing.

Checks HA2 LIT and PRZR level > 5% program and places two PZR backup heaters in the ON position prior to falling below 57%.

S / U

ACTION is conditional and may not be completed

ELEMENTS:	STANDARDS:	RESULTS: (CIRCLE)

NOTE:
- Listed below is the most likely procedural flowpath, but there are a variety of procedural flowpaths available to the candidate, such as:
  - RE-enter AOP-16 step 1 and Re-perform AOP-16 step 7 and 8.
  - Implement AP-6, and isolate letdown and proceed to element 10 via step 9.11 RNO.
  - Implement SOP-2.1 at step 9.15 of AOP-16 to isolate letdown.
  - Implement ARP-1.4, DE3 or DE4 to isolate letdown.

(AOP-16.0 step 9.13)

5. Adjust LP LTDN PRESS PK 145 to maintain desired letdown pressure - BETWEEN 260-450 PSIG

Attempts to lower pressure by pushing the **LOWER (OPEN) pushbutton on PK-145** S / U

PI-145 will be > 450 PSIG and cycling on the Letdown Relief.

(ARP-1.4, v51.0 location DE3 step 1)

6. Monitor the LTDN ORIF ISO REL line to PRT Temperature (TI-141) and LTDN HX Outlet Press (PI- l45).

Identifies increasing temperature and HIGH pressure. S / U

OR

(AOP-16.0 step 7 RNO actions)
Check PRT parameters – STABLE

OR

Identifies PRT parameters rising.

(ARP-1.4, v51.0 location DE3 step 2)

* 7. IF temperature continues to rise rapidly indicating a lifted relief valve, THEN close LTDN ORIF ISO 45 (60) GPM Q1E21HV8149A, B AND C.

CLOSE HV8149B OR HV8149C (whichever was previously opened).
OBSERVES the green light LIT S / U

OR

(AOP-16.0, step 7 RNO actions)
IF leakage to the PRT is excessive, Verify LTDN ORIF ISO valves - CLOSED

NOTE: closing LCV-459 and/or LCV-460 will achieve the same outcome.

ELEMENTS:	STANDARDS:	RESULTS: (CIRCLE)
(AOP-16 step 8.4) 8. IF desired due to plant conditions, THEN place excess letdown in service using FNP-1-SOP-2.7, CHECMIAL AND VOLUME CONTROL SYSTEM EXCESS LETDOWN	**Determines that Excess letdown is required** proceeds to SOP-2.7 to place excess letdown in service. **IF REQUIRED Cue**: "SS directs placing Excess letdown in service"	S / U
(SOP-2.7 step 4.1.1) 9. Verify the RCDT system in operation and on recirc per FNP-1-SOP-50.0, Liquid Waste Processing System Step 4.1.1.	Directs RADSIDE SO to align RCDT per SOP-50. (**TIME COMPRESSION-** may be necessary if candidate does not proceed until the following report is made) **CUE:** "Radside SO Reports that the RCDT system is in operation and on recirc per SOP-50.0 step 4.1.1"	S / U
(SOP-2.7 step 4.1.2) 10. Notify the Radside System Operator to expect an increase in RCDT level prior to placing excess letdown on service.	Informs Radside SO that filling RCDT. **CUE:** "Radside SO Acknowledges"	S / U
(SOP-2.7 step 4.1.3) 11. Verify HV3095 CCW TO EXC LTDN/RCDT HXS, Open.	Verifies HV3095 is open **OBSERVES** the red light LIT	S / U
(SOP-2.7 step 4.1.4) 12. Verify CCW FROM EXC LTDN / RCDT HXS HV3443, Open	Verifies HV3443 is open **OBSERVES** the red light LIT	S / U
(SOP-2.7 step 4.1.5) 13. Verify CCW FROM EXC LTDN / RCDT HXS HV3067, Open	Verifies HV3067 is open **OBSERVES** the red light LIT	S / U

ELEMENTS:	STANDARDS:	RESULTS: (CIRCLE)
(SOP-2.7 step 4.1.6) 14. Verify HCV137, EXC LTDN HX DISCH, CLOSED.	Checks Closed HCV137 Pot setting at "0".	S / U
(SOP-2.7 step 4.1.7) * 15. Open HV8153, EXC LTDN ISO.	OPEN HCV8153 **OBSERVES** the red light LIT	S / U
(SOP-2.7 step 4.1.8) * 16. Open HV8154, EXC LTDN ISO.	OPEN HV8154 **OBSERVES** the red light LIT	S / U
(SOP-2.7 step 4.1.9) 17. Place HV8143, EXC LTDN DIVERT VLV, control switch in the RCDT position.	Places HV8143 in the RCDT position.	S / U

It may be necessary to cue the candidate to increase the excess letdown to maximum flow rate.
CUE from the shift supervisor: "Raise the flow rate on excess letdown to the maximum allowed by procedure."

(SOP-2.7 step 4.1.10) * 18. Slowly throttle open HCV137, EXC LTDN HX DISCH, to establish excess letdown flow not to exceed 165° F excess letdown heat exchanger outlet temperature.	Throttles open HCV137 to establish excess letdown flow and not exceed 165°F.	S / U

____ STOP TIME

Terminate when excess letdown flow is established and the operator has control of the trend.

CRITICAL ELEMENTS: Critical Elements are denoted with an asterisk (*) before the element number.

GENERAL REFERENCES:

1. PROCEDURE: FNP-1-AOP-16.0, V 17.0
   FNP-1-ARP-1.4, V51.0
   FNP-1-SOP- 2.7, V10.0

2. K/As:

004A2.07	RO-3.4	SRO-3.7
004A4.05	RO-3.6	SRO-3.1

GENERAL TOOLS AND EQUIPMENT:

FNP-1-AOP-16.0, V 17.0 marked complete through but not including step 9.9.

Critical ELEMENT justification:

STEP	Evaluation
1.	CRITICAL to accomplish the assigned TASK's objective • This is the original objective (task) directed. IF not performed, the original task could not be achieved and the decision to implement the alternative path would not be made for a legitimate reason.
2.	Not critical since this course of action will not be successful, the establishment of normal charging has no critical impact on this task.
3.	CRITICAL to accomplish the assigned TASK's objective • This is the original objective (task) directed. IF not performed, the original task could not be achieved.
4.	Not critical since the conditional statement will not be satisfied during the performance of the JPM, and is NOT applicable.
5.	Not critical since this action will not be successful due to the failure installed on PK-145.
6.	Not critical since this step is a check and improper evaluation alone does not constitute the critical step.
7.	CRITICAL since this action will terminate the letdown leak initiated through the letdown relief valve.
8.	Not critical, a decision is not critical, and the actions will be evaluated with other critical elements.
9.	Not critical failure to complete this action **will not prevent successful completion** of establishing excess letdown, although there would be some long term equipment consequences.
10.	Not critical this is a notification step that has no impact on successful completion.
11.	Not critical since this valve is normally open on the MCB.
12.	Not critical since this valve is normally open on the MCB.
13.	Not critical since this valve is normally open on the MCB.
14.	Not critical since this component is already properly aligned, failure to complete this step will have no impact on successful completion of the task.
15.	CRITICAL since the task objective of controlling PZR level cannot be achieved without opening this valve.
16.	CRITICAL since the task objective of controlling PZR level cannot be achieved without opening this valve.
17.	Not critical since objective of controlling PZR level CAN be achieved without repositioning this valve.
18.	CRITICAL since the task objective of controlling PZR level cannot be achieved without opening this valve. It is also critical to NOT exceed 165°F on excess letdown heat exchanger.

COMMENTS:

— **If PZR level is permitted to rise to 92%, an Automatic RX trip will be initiated.**

— **If PZR level is permitted to rise > 63.5%, LCO 3.4.9 is not met.**

CONDITIONS

When I tell you to begin, you are to **ESTABLISH LETDOWN AS REQUIRED FOLLOWING A SPURIOUS LETDOWN ISOLATION SIGNAL AND STABILIZE PRESSURIZER LEVEL.** The conditions under which this task is to be performed are:

a. The Plant has experienced a Penetration Room High Pressure signal which isolated letdown.
b. Pressurizer level is ~ 50% and CCW is aligned to the miscellaneous header.
c. The malfunction has been corrected.
d. HV-8175A & HV-8175B have been opened by the Radside System Operator.
e. All required steps up to step 9.8 have been completed by another operator.
f. You have been directed to establish letdown and stabilize pressurizer level using AOP-16.0, beginning at step 9.9.

Step	Action/Expected Response	Response NOT Obtained
9.6	Verify LTDN HI TEMP DIVERT VLV Q1E21TCV143: [] DEMIN light - LIT [] Handswitch in - AUTO	
9.7	IF necessary, THEN OPEN both LTDN LINE PENE RM ISO's from the Penetration Room Isolation Panel. [] Q1E21HV8175A [] Q1E21HV8175B	
9.8	Verify LTDN LINE CTMT ISO Q1E21HV8152 - OPEN	
9.9	Verify LTDN LINE ISO valves - OPEN [] Q1E21LCV459 [] Q1E21LCV460	
9.10	Initiate minimum charging flow:	
9.10.1	Verify CHG FLOW FK 122 in - MAN	
9.10.2	Establish minimum charging flow based on orifices to be placed on service: • 1 Orifice - 18 gpm OR • 2 Orifices - 40 gpm	
9.11	Establish approximately 60 gpm letdown flow by OPENING: [] Q1E21HV8149B OR [] Q1E21HV8149C	9.11 IF no letdown flow can be established, THEN proceed to Step 10.

Step 9 continued on next page.

Step	Action/Expected Response	Response NOT Obtained
9.12	[CA] IF all backup heaters energized due to pressurizer level deviation, THEN verify two sets of backup heaters in ON prior to level deviation clearing.	
9.13	Adjust LP LTDN PRESS PK 145 to maintain desired letdown pressure - BETWEEN 260-450 PSIG	9.13 IF necessary, THEN adjust LP LTDN PRESS PK 145 in MANUAL to stabilize Letdown Pressure at desired value.
9.13.1	Set controller between 4.3 and 7.5	
9.13.2	Check letdown flow - STABLE	
9.13.3	Place PK 145 in AUTO	
9.13.4	Control Letdown pressure as desired	
9.14	Control LTDN HX OUTLET TEMP TK 144 to maintain Letdown temperature 90 to 115°F. [] TI-116 VCT TEMP [] TI-143 DIVERT LTDN HX TEMP [] TI-144 CCW LTDN HX TEMP	
9.15	Refer to FNP-1-SOP-2.1, CHEMICAL AND VOLUME CONTROL SYSTEM PLANT STARTUP AND OPERATION, for further guidance on Letdown system control	

Step	Action/Expected Response	Response NOT Obtained
___10	**Determine status of letdown flow:**	
	10.1 Check letdown flow - ESTABLISHED • Normal letdown flow OR • Excess letdown flow	10.1 Perform the following: 10.1.1 Continue monitoring levels: • Pressurizer level • VCT level 10.1.2 IF desired, THEN establish excess letdown using FNP-1-SOP-2.7, CHEMICAL AND VOLUME CONTROL SYSTEM EXCESS LETDOWN. 10.1.3 Continue efforts to determine cause of letdown malfunction. 10.1.3.1 WHEN cause of letdown malfunction has been corrected, THEN return to step 8.0. OR 10.1.3.2 IF adequate letdown flow cannot be restored, THEN proceed to step 11.0.
	10.2 Go to procedure and step in effect	

LOCATION DE3

SETPOINT: 165 ± 2°F

E3	LTDN ORIF ISO VLV REL LINE TEMP HI

ORIGIN: Temperature Bistable TB-141 from Temperature Element (N1E21TE141-N)

PROBABLE CAUSE

1. LTDN ORIF OUTLET REL VLV, Q1E21V255, leaking or lifted.
2. LP LTDN PRESS PK-145 malfunction.

AUTOMATIC ACTION

NONE

OPERATOR ACTION

CAUTION: If actual VCT level is low, refer to annunciator DF3. (SOER 97-1)

1. Monitor the LTDN ORIF ISO REL line to PRT Temperature (TI-141) and LTDN HX Outlet Press (PI- l45).
2. IF temperature continues to rise rapidly indicating a lifted relief valve, THEN close LTDN ORIF ISO 45 (60) GPM Q1E21HV8149A, B AND C.
3. If the high temperature is due to LP LTDN press PK-145 malfunctions, THEN place valve controller in manual and adjust as required.

NOTE: Transients that will require boration or dilution should be avoided if letdown has been secured.

4. IF a ramp is in progress, THEN place turbine load on HOLD.
5. Go to FNP-1-AOP-16.0, CVCS MALFUNCTION to address the loss of letdown flow.

References: A-177100, Sh. 203; D-175039, Sh. 1; U-176024; PLS Document

LOCATION DE4

SETPOINT: 462 PSIG

ORIGIN: Pressure Bistable PB-145 from Pressure Transmitter (Q1E21PT145)

E4	LTDN HX OUTLET PRESS HI

PROBABLE CAUSE

1. LP LTDN PRESS PK-145 malfunction.
2. All three Letdown Orifice Isolation Valves open.

AUTOMATIC ACTION

NONE

OPERATOR ACTION

CAUTION: If actual VCT level is low, refer to annunciator DF3. (SOER 97-1)

1. Monitor LTDN HX Outlet Flow (FI-150) and LTDN HX Outlet Press (PI-145).
2. Ensure proper orifice isolation valve selection.
3. IF the high pressure is due to LP LTDN PRESS PK-145 malfunction, THEN place valve controller in manual and attempt to reduce the pressure.
4. IF pressure can NOT be controlled manually with LP LTDN PK-145, THEN close LTDN ORIF ISO 45 (60) GPM Q1E21HV8149A, B, and C.

NOTE: Transients that will require boration or dilution should be avoided if letdown has been secured.

5. IF a ramp is in progress, THEN place turbine load on HOLD.
6. Go to FNP-1-AOP-16.0, CVCS MALFUNCTION to address the loss of letdown flow.

References: A-177100, Sh. 204; D-175039, Sh. 1&2; U-176018; PLS Document

1.0 Purpose

This procedure provides Initial Conditions, Precautions and Limitations, and Instructions for operation of excess letdown.

2.0 Initial Conditions

2.1 CVCS is aligned for normal operation per FNP-1-SOP-2.1, Chemical and Volume Control System Plant Startup and Operation.

2.2 The component cooling water system is supplying cooling water to the excess letdown heat exchanger per FNP-1-SOP-23.0, Component Cooling Water System.

2.3 The component cooling water system is supplying cooling water to the seal water heat exchanger per FNP-1-SOP-23.0, Component Cooling Water System, if excess letdown is to be lined up to the VCT.

2.4 The waste processing system is capable of receiving the excess letdown flow per FNP-1-SOP-50.0, Liquid Waste Processing System, if excess letdown is to be lined up to the RCDT.

3.0 Precautions and Limitations

3.1 Do not exceed 165°F excess letdown heat exchanger outlet temperature.

3.2 Aligning the excess letdown system to the VCT will raise the backpressure on the RCP seals, thus reducing RCP seal leakoff flow rates. While in this alignment, it must be verified that each reactor coolant pump No. 1 seal leakoff flow rate is maintained at 1 to 3 gpm.

3.3 Pressurizer and VCT levels should be monitored more frequently when excess letdown is in operation.

3.4 If plant operation is to continue for an extended period of time with excess letdown in service and normal letdown isolated, RCS oxygen and hydrogen concentrations should be monitored more frequently. SEAL WATER RETURN TO THE VCT ISOLATION 1-CVC-V-8482 (Q1E21V196) is to remain locked closed in modes 1-4.

3.5 Operating the plant with normal letdown isolated for extended periods can have a significant effect on RCS activity and chemistry control since RCP seal return flow/excess letdown flow cannot be lined up through the CVCS demineralizers. Also, the ability to borate or dilute the RCS is significantly affected due to the reduced charging flow rate.

3.6 When placing excess letdown on service, always align to the RCDT first in order to flush the existing line volume. This will equalize the boron concentration with the existing RCS concentration, and clear the line of any trapped gases that may have accumulated.

3.7 Monitor RCDT pressure while excess letdown is aligned, and if necessary control pressure in accordance with FNP-1-SOP-50.0, Liquid Waste Processing System. Relief valves setting for RCDT is set at 25 psig.

3.8 Placing Excess Letdown in service will cause calculated reactor thermal power to read lower than actual power due to the IPC computing no heat loss due to letdown while there is actual heat loss due to Excess Letdown.

4.0 Instructions

CAUTION

Do not exceed 165° F excess letdown heat exchanger outlet temperature.

NOTES

The volume of the reactor coolant drain tank is approximately 350 gallons.

Excess letdown flow will be limited to approximately 10-15 gpm.

4.1 Placing Excess Letdown In Service

4.1.1 **Verify** the RCDT system in operation and on recirc per FNP-1-SOP-50.0, Liquid Waste Processing System Step 4.1.1. ☐

4.1.2 **Notify** the radside system operator to expect an increase in RCDT level prior to placing excess letdown on service. ☐

4.1.3 **Verify** Q1P17HV3095, CCW TO EXC LTDN/RCDT HXS, OPEN. ☐

4.1.4 **Verify** Q1P17HV3443, CCW FROM EXC LTDN/RCDT HXS, OPEN. ☐

4.1.5 **Verify** Q1P17HV3067, CCW FROM EXC LTDN/RCDT HXS, OPEN. ☐

4.1.6 **Verify** Q1E21HCV137, EXC LTDN HX DISCH, CLOSED. ☐

4.1.7 **Open** Q1E21HV8153, EXC LTDN ISO. ☐

4.1.8 **Open** Q1E21HV8154, EXC LTDN ISO. ☐

4.1.9 **Place** Q1E21HV8143, EXC LTDN DIVERT VLV, control switch in the RCDT position. ☐

4.1.10 Slowly **throttle open** Q1E21HCV137, EXC LTDN HX DISCH, to establish excess letdown flow not to exceed 165° F excess letdown heat exchanger outlet temperature. ☐

SIMULATOR JPM C.

CRO-333-MODIFIED
TITLE: Perform The Required Actions For Cold Leg Recirculation
EVALUATION LOCATION: ☒ **SIMULATOR** ☐ CONTROL ROOM ☐ CLASSROOM
PROJECTED TIME: 14 MIN SIMULATOR IC NUMBER: IC-220
☒ ALTERNATE PATH ☐ TIME CRITICAL ☐ PRA

JPM DIRECTIONS:

1. Examinee may be given an opportunity to **preview** the task prior to entering the Simulator to lower the required time to conduct the task.

TASK STANDARD: Upon successful completion of this JPM, the examinee will:

- Correctly complete the alignment to place ECCS for cold leg recirculation IAW ESP-1.3.

Examinee:	
Overall JPM Performance:	**Satisfactory** ☐ **Unsatisfactory** ☐
Evaluator Comments (attach additional sheets if necessary)	

EXAMINER: _____

Developer	Name: Howard Fitzwater	Date: 1/6/2011
NRC Approval	SEE NUREG 1021 FORM ES-301-3	

Simulator Setup

EVENT DESCRIPTION	ACTION	DETAILS
Reset into IC-220 for JPM "C"		
Put OPS group on MCB CRT Acknowledge computer alarms		
Run / Freeze Simulator		
Acknowledge annunciators		
Turn Horns ON		
Mark up ESP-1.3, v21 as completed through Step 7.5. (STEP 7.4 is N/A)		
STA screen on MCB display		
Setup IC-220*		
RST IC-151 Contains the following; MAL-RCS2A / TRUE	*	
IMF cRH8706A_cc3 CIOSED	*	
SNP 220	*	

CONDITIONS

When I tell you to begin, you are to **PERFORM THE REQUIRED ACTIONS FOR COLD LEG RECIRCULATION.** The conditions under which this task is to be performed are:

a. A safety injection is in progress following a LOCA.
b. ESP-1.3 has been entered and all steps through Step 7.5 have been completed.
c. 1B Charging pump is aligned to A Train.
d. You have been directed to align ECCS for cold leg recirculation starting at Step 7.6 of ESP-1.3.

INITIATING **CUE**, "You may begin."

EVALUATION CHECKLIST

	ELEMENTS:	STANDARDS:	RESULTS: (CIRCLE)
	START TIME:		
* 1.	(ESP-1.3 step 7.6) Stop BOTH RHR pumps.	**STOPS** 1A & 1B RHR pumps. Observes the green light LIT and pump amps decrease to "0"	S / U
* 2.	(ESP-1.3 step 7.7) Close RWST TO 1A RHR PUMP MOV-8809A.	**CLOSES** MOV-8809A Observes the green light LIT	S / U
* 3.	(ESP-1.3 step 7.8) Align CTMT sump to 1A RHR PUMP. MOV8811A MOV8812A	**OPENs** the following: MOV-8811A MOV8812A Observes the red lights LIT	S / U
* 4.	(ESP-1.3 step 7.9) Close RHR to RCS HOT LEGS XCON. MOV8887A	**CLOSES** MOV-8887A Observes the green light LIT	S / U
* 5.	(ESP-1.3 step 7.10) Start 1A RHR PUMP [ ] RHR pump 1A amps > 0	**STARTS the** 1A RHR pump and checks amps. Observes the red light LIT and amps rising. NOTE: amp check is NOT critical	S / U

ELEMENTS:	STANDARDS:	RESULTS: (CIRCLE)
(ESP-1.3 step 7.11) 6. Verify A Train LHSI flow - STABLE. 1A RHR HDR FLOW [ ] FI-605A	CHECKS FI-605A	S / U
(ESP-1.3 step 7.12) * 7. Close RWST TO 1B RHR PUMP MOV-8809B.	CLOSES MOV-8809A Observes the green light LIT	S / U
(ESP-1.3 step 7.13) * 8. Align CTMT sump to 1B RHR PUMP. MOV8811B MOV8812B	OPENs the following: MOV-8811B MOV8812B Observes the red lights LIT	S / U
(ESP-1.3 step 7.14) * 9. Close RHR to RCS HOT LEGS XCON. MOV8887B	CLOSES MOV-8887B Observes the green light LIT	S / U
(ESP-1.3 step 7.15) * 10. Start 1B RHR PUMP [ ] RHR pump 1B amps > 0	*STARTs 1B RHR pump and checks amps. Observes the red light LIT and amps rising. NOTE: amp check is NOT critical	S / U
(ESP-1.3 step 7.16) 11. Verify A Train LHSI flow -STABLE. 1B RHR HDR FLOW [ ] FI-605B	CHECKS FI-605B	S / U
(ESP-1.3 step 7.17) 12. Verify at least one train of RHR in operation providing recirculation flow	CHECKS FI-605A and B flow stable	S / U

ELEMENTS:	STANDARDS:	RESULTS: (CIRCLE)
(ESP-1.3 step 7.18) 13. Verify CHG pump miniflow valves-CLOSED - MOV-8109A - MOV-8109B - MOV-8109C - MOV-8106	CHECKS the following closed: - MOV-8109A - MOV-8109B - MOV-8109C - MOV-8106 Observes the green lights LIT	S / U
(ESP-1.3 step 7.19) 14. Verify seal return flow valves – CLOSED RCP SEAL WTR RTN ISO - MOV-8100 - MOV-8112	CHECKS the following closed: - MOV-8100 - MOV-8112 Observes the green lights LIT	S / U
(ESP-1.3 step 7.20) 15. IF 1A RHR PUMP started, THEN align charging pump suction header isolation valves based on 1B charging pump status. 1B charging pump status: Aligned to the **A train** - MOV-8130A OPEN - MOV-8130B OPEN - MOV-8131A CLOSED - MOV-8131B CLOSED	Determines 1B charging pump is aligned to the B train and then: **CHECKS** the following OPEN - MOV-8130A - MOV-8130B Observes the red lights LIT **CLOSES** the following: - MOV-8131A - MOV-8131B Observes the green lights LIT	S / U

Evaluator NOTE:	• A failure is in on MOV-8706A that seals in the CLOSE signal. The MOV will stroke OPEN, but will IMMEDIATELY stroke closed.

ELEMENTS:	STANDARDS:	RESULTS: (CIRCLE)
(ESP-1.3 step 7.21) 16. Open RHR supply to A train charging pump suction. 1A RHR HX TO CHG PUMP SUCT [ ]MOV-8706A	Places handswitch for the following in the OPEN position. - MOV-8706A Observes the BOTH red and green lights LIT, then green light is LIT. **If reported to the SS that MOV-8706A has failed to remain open, and that RNO actions will be initiated CUE:** "The SS acknowledges."	S / U
(ESP-1.3 step 7.21 RNO) * 17. Stop the running A train CHG PUMP. -go to step 7.25	**STOPS** the 1A CHG pump Observes the green light LIT	S / U
(ESP-1.3 step 7.25) 18. IF 1B RHR PUMP started, <u>THEN</u> align charging pump suction header isolation valves based on 1B charging pump status. 1B charging pump status: Aligned to the **A train** - MOV-8130A OPEN - MOV-8130B OPEN - MOV-8131A CLOSED - MOV-8131B CLOSED	Determines 1B charging pump is aligned to the B train and then: **CHECKS** the following OPEN - MOV-8130A - MOV-8130B Observes the red lights LIT **CHECKS** the following ClOSED: - MOV-8131A - MOV-8131B Observes the green lights LIT	S / U
(ESP-1.3 step 7.26) * 19. Open RHR supply to B train charging pump suction. 1B RHR HX TO CHG PUMP SUCT [ ]MOV-8706B	**OPENs** MOV-8706B Observes the red light LIT	S / U

ELEMENTS:	STANDARDS:	RESULTS: (CIRCLE)
(ESP-1.3 step 7.27) 20. Verify B Train charging pump running.	**CHECKS amps on B Train charging pump.**	S / U
(ESP-1.3 step 7.28) 21. Verify VCT level – GREATER THAN 5%.	**CHECKS LI-112 and/or LI-115 indicate > 5%.**	S / U
(ESP-1.3 step 7.29) * 22. Close B train RWST to charging pump header valve. RWST TO CHG PUMP [ ] LCV115D	**CLOSES LCV-115D** Observes the green light LIT	S / U
(ESP-1.3 step 7.30) 23. Check one CHG PUMP in each train - STARTED. [ ] A train (1A or 1B) amps >0 [ ] B train (1C) amps >0	**Checks** charging pump amp meters—determines only B train CHG pump is running. **Go to 7.27 RNO.**	S / U

CAUTION Injecting through 'A' train and 'B' train flowpaths simultaneously with only one charging pump running could result in pump runout conditions. Therefore, in Step 7.27 RNO the HHSI valve should be closed without delay after MOV8885 is opened.

(ESP-1.3 step 7.30 RNO actions) 24. IF an A train CHG PUMP Started, THEN proceed to step 7.29. **IF NOT**. Establish B train injection per the following.	**Determines A train Chg pump was NOT started** continues with step 7.27.1 --- **DOES NOT PROCEED to step 7.29 yet.**	S / U
(ESP-1.3 step 7.30.1 RNO actions) * 25. Open charging pump recirculation to RCS cold legs valve. CHG PUMP RECIRC TO RCS COLD LEGS [ ] MOV8885	**OPENS** MOV-8885 Observes the red light LIT	S / U

ELEMENTS:	STANDARDS:	RESULTS: (CIRCLE)
(ESP-1.3 step 7.30.2 RNO actions) * 26. Close HHSI isolation valves. HHSI TO RCS CL ISO [ ] MOV8803A [ ] MOV8803B	**CLOSES** [ ] MOV8803A **AND** [ ] MOV8803B Observes the green lights LIT	S / U
7.27.3 RNO actions= go to step 7.29		
(ESP-1.3 step 7.32) 27. Align charging pump discharge header isolation valves based on 1B charging pump status. 1B charging pump status: Aligned to the **A train** - MOV-8132A OPEN - MOV-8132B OPEN - MOV-8133A CLOSED - MOV-8133B CLOSED	Determines 1B charging pump is aligned to the B train and then: **CHECKS** the following OPEN - MOV-8132A - MOV-8130B Observes the red lights LIT **CLOSES** the following - MOV-8133A - MOV-8133B Observes the green lights LIT	S / U
(ESP-1.3 step 7.33) 28. Verify SI flow - STABLE. A TRN HHSI FlOW [ ] FI 943 B TRN HHSI FlOW [ ] FI 940 1A (1B) RHR HDR FlOW [ ] FI 605A [ ] FI 605A	**CHECKS SI flow instruments for stable flow.** A TRN HHSI FlOW [ ] FI 943 NO flow on this FI due to failed alignment B TRN HHSI FlOW [ ] FI 940 1A (1B) RHR HDR FlOW [ ] FI 605A [ ] FI 605B	S / U

STOP TIME: _____

TERMINATE JPM when SI flow verified stable on FI-940 and 605A and B.

CRITICAL ELEMENTS: Critical Elements are denoted with an asterisk (*) before the element number.

GENERAL REFERENCES:

1. PROCEDURE: FNP-1-ESP-1.3, V 22.0
2. K/As: 011EA1.11 RO-4.2 SRO-4.2

GENERAL TOOLS AND EQUIPMENT:

Provide/Acquire:

1. A pre-marked ESP-1.3 through step 7.5

Critical ELEMENT justification:

STEP	Evaluation
1.	CRITICAL since ESF components would be damaged if this step is not performed-impacting the ability to provide Long Term Core Cooling.
2.	CRITICAL since failure to complete this task could allow contaminated fluids to be transferred to the RWST from CTMT sump and allow for potential Air binding of ESF components, impacting Long Term Core Cooling.
3.	CRITICAL since ESF components would be damaged if this step is not performed-impacting the ability to provide Long Term Core Cooling.
4.	CRITICAL for the alignment of Core Cooling
5.	CRITICAL establishment of Core Cooling
6.	Not critical since this action is a check step. NO actions/decisions are initiated from this action.
7.	CRITICAL since failure to complete this task could allow contaminated fluids to be transferred to the RWST from CTMT sump and allow for potential Air binding of ESF components, impacting Long Term Core Cooling.
8.	CRITICAL since ESF components would be damaged if this step is not performed-impacting the ability to provide Long Term Core Cooling.
9.	CRITICAL for the alignment of Core Cooling
10.	CRITICAL establishment of Core Cooling (2nd train)
11.	Not critical since this action is a check step. NO actions/decisions are initiated from this action.
12.	Not critical since this action is a check step. NO actions/decisions are initiated from this action.
13.	Not critical since there is NO action required.
14.	Not critical since there is NO action required.
15.	Not critical since improper performance of this action has no impact on HHSI.
16.	Not critical since a malfunction will prevent success.
17.	CRITICAL to protect ESF equipment (CHG pump)
18.	Not critical since improper performance of this action has no impact on HHSI.
19.	CRITICAL for the alignment of HHSI injection
20.	Not critical since this action is a check step. NO actions/decisions are initiated from this action.
21.	Not critical since improper performance of this action has no impact on HHSI and VCT level will be >5%.
22.	CRITICAL for the alignment of HHSI injection
23.	Not critical this is a verification step and the charging pump is running.
24.	Not critical this is a verification step.
25.	CRITICAL for the aligning HHSI pump to RCS.
26.	CRITICAL for the protecting HHSI pump from runout conditions.
27.	Not critical since improper performance of this action has no impact on HHSI.
28.	Not critical since this is a verification/check step, no actions will be initiated based on this action. NATURAL termination point of actions.

COMMENTS:

Step	Action/Expected Response	Response NOT Obtained

****

CAUTION: Pump damage will occur if a charging pump or RHR pump is started in a train in which a flow path from the containment sump to the RCS cannot be established or maintained.

****

___ 7 **Align ECCS for cold leg recirculation.**

7.1 Check large break LOCA has occurred as indicated by accumulators discharged.

7.1 Proceed to step 7.4.

7.2 Check containment sump level - GREATER THAN 3.4 ft {3.8 ft}.

CTMT SUMP
LVL
[] LI 3594A

POST ACCIDENT
CTMT WTR LVL
[] LR 3594B

7.2 IF both containment sump level indications less than 3.4 ft {3.8 ft},
THEN go to FNP-1-ECP-1.1, LOSS OF EMERGENCY COOLANT RECIRCULATION.

7.3 Proceed to step 7.5.

7.4 Check containment sump level - GREATER THAN 2.5 ft {2.9 ft}.

CTMT SUMP
LVL
[] LI 3594A

POST ACCIDENT
CTMT WTR LVL
[] LR 3594B

7.4 IF both containment sump level indications less than 2.5 ft {2.9 ft},
THEN go to FNP-1-ECP-1.1, LOSS OF EMERGENCY COOLANT RECIRCULATION.

7.5 Verify recirculation valve disconnects - CLOSED USING ATTACHMENT 1.

7.6 Stop both RHR PUMPs.

Step 7 continued on next page.

Step	Action/Expected Response	Response NOT Obtained
7.7	Close RWST TO 1A RHR PUMP Q1E11MOV8809A.	7.7 Perform the following. 7.7.1 Stop the running A train CHG PUMP. 7.7.2 Proceed to step 7.12.
7.8	Align CTMT sump to 1A RHR PUMP. CTMT SUMP TO 1A RHR PUMP [] Q1E11MOV8811A open [] Q1E11MOV8812A open	7.8 Perform the following. 7.8.1 Stop the running A train CHG PUMP. 7.8.2 Proceed to step 7.12.
7.9	Close RHR to RCS HOT LEGS XCON Q1E11MOV8887A.	
7.10	Start 1A RHR PUMP. RHR PUMP [] 1A amps > 0	7.10 Perform the following. 7.10.1 Stop the running A train CHG PUMP. 7.10.2 Proceed to step 7.12.
7.11	Verify A Train LHSI flow - STABLE. 1A RHR HDR FLOW [] FI 605A	
7.12	Close RWST TO 1B RHR PUMP Q1E11MOV8809B.	7.12 Perform the following. 7.12.1 Stop the running B train CHG PUMP. 7.12.2 Proceed to step 7.17.
7.13	Align CTMT sump to 1B RHR PUMP. CTMT SUMP TO 1B RHR PUMP [] Q1E11MOV8811B open [] Q1E11MOV8812B open	7.13 Perform the following. 7.13.1 Stop the running B train CHG PUMP. 7.13.2 Proceed to step 7.17.

Step 7 continued on next page.

Step	Action/Expected Response	Response NOT Obtained
7.14	Close RHR to RCS HOT LEGS XCON Q1E11MOV8887B.	
7.15	Start 1B RHR PUMP. RHR PUMP [] 1B amps > 0	7.15 Perform the following. 7.15.1 Stop the running B train CHG PUMP. 7.15.2 Proceed to step 7.17.
7.16	Verify B Train LHSI flow - STABLE. 1B RHR HDR FLOW [] FI 605B	

Step 7 continued on next page.

Step	Action/Expected Response	Response NOT Obtained
7.17	Verify at least one train of RHR in operation providing recirculation flow.	7.17 Perform the following: 7.17.1 Check A Train RHR available: • 1A RHR Pump • CTMT SUMP TO 1A RHR PUMP Q1E11MOV8811A • CTMT SUMP TO 1A RHR PUMP Q1E11MOV8812A • 1A RHR HX TO CHG PUMP SUCT Q1E11MOV8706A • CCW TO 1A RHR HX Q1P17MOV3185A 7.17.2 IF A Train RHR components available for recirculation flowpath, THEN start an A Train Charging Pump and return to step 7.8. 7.17.3 Check B Train RHR available: • 1B RHR Pump • CTMT SUMP TO 1B RHR PUMP Q1E11MOV8811B • CTMT SUMP TO 1B RHR PUMP Q1E11MOV8812B • 1B RHR HX TO CHG PUMP SUCT Q1E11MOV8706B • CCW TO 1B RHR HX Q1P17MOV3185B 7.17.4 IF B train RHR components available for recirculation flowpath, THEN start a B Train Charging Pump and return to step 7.13. 7.17.5 IF no RHR train is available, THEN check RWST level greater than 4.5 ft AND start any available charging pump aligned to the RWST.

Step 7 continued on next page.

Step	Action/Expected Response	Response NOT Obtained
		7.17.6 Go to FNP-1-ECP-1.1, LOSS OF EMERGENCY COOLANT RECIRCULATION.

****

CAUTION: The charging pumps should be stopped if RCS pressure rises to greater than their shutoff head.

****

****

CAUTION: The charging pump miniflows should NOT be reopened to satisfy miniflow criteria while the charging pump suctions are aligned to the RHR pumps.

****

7.18 Verify charging pump miniflow valves - CLOSED.

1A(1B,1C) CHG PUMP
MINIFLOW ISO
[] Q1E21MOV8109A
[] Q1E21MOV8109B
[] Q1E21MOV8109C

CHG PUMP
MINIFLOW ISO
[] Q1E21MOV8106

7.19 Verify seal return flow valves - CLOSED.

RCP SEAL WTR
RTN ISO
[] Q1E21MOV8100 closed
[] Q1E21MOV8112 closed

Step 7 continued on next page.

Step	Action/Expected Response	Response NOT Obtained
7.20	IF 1A RHR PUMP started, THEN align charging pump suction header isolation valves based on 1B charging pump status.	7.20 IF 1A RHR PUMP NOT started, THEN perform the following. 7.20.1 Verify the A train CHG PUMP stopped. 7.20.2 Proceed to step 7.25.

1B Charging Pump Status	Aligned As A Train pump	Aligned As B Train pump	Not Available
CHG PUMP SUCTION HDR ISO Q1E21MOV	[] 8130A open [] 8130B open [] 8131A closed [] 8131B closed	[] 8130A closed [] 8130B closed [] 8131A open [] 8131B open	[] 8130A closed [] 8130B closed [] 8131A closed [] 8131B closed

7.21	Open RHR supply to A train charging pump suction. 1A RHR HX TO CHG PUMP SUCT [] Q1E11MOV8706A	7.21 Perform the following. 7.21.1 Stop the running A train CHG PUMP. 7.21.2 Proceed to step 7.25.
7.22	Verify A train CHG PUMP - started.	
7.23	Verify VCT level - GREATER THAN 5%.	
7.24	Close A train RWST to charging pump header valve. RWST TO CHG PUMP [] Q1E21LCV115B	7.24 Perform the following. 7.24.1 Stop the running A train CHG PUMP. 7.24.2 Close RHR supply to A train charging pump suction. 1A RHR HX TO CHG PUMP SUCT [] Q1E11MOV8706A

Step 7 continued on next page.

Step	Action/Expected Response	Response NOT Obtained

7.25 IF 1B RHR PUMP started, THEN align charging pump suction header isolation valves based on 1B charging pump status.

1B Charging Pump Status	Aligned As A Train pump	Aligned As B Train pump	Not Available
CHG PUMP SUCTION HDR ISO Q1E21MOV	[] 8130A open [] 8130B open [] 8131A closed [] 8131B closed	[] 8130A closed [] 8130B closed [] 8131A open [] 8131B open	[] 8130A closed [] 8130B closed [] 8131A closed [] 8131B closed

7.25 IF 1B RHR PUMP NOT started, THEN perform the following.

7.25.1 Verify the B train CHG PUMP stopped.

7.25.2 Proceed to step 7.30.

7.26 Open RHR supply to B train charging pump suction.

1B RHR HX
TO CHG PUMP SUCT
[] Q1E11MOV8706B

7.26 Perform the following.

7.26.1 Stop the running B train CHG PUMP.

7.26.2 Proceed to step 7.30.

7.27 Verify B train CHG PUMP - started.

7.28 Verify VCT level - GREATER THAN 5%.

Step 7 continued on next page.

Step	Action/Expected Response	Response NOT Obtained
7.29	Close B train RWST to charging pump header valve. RWST TO CHG PUMP [] Q1E21LCV115D	7.29 Perform the following. 7.29.1 Stop the running B train CHG PUMP. 7.29.2 Close RHR supply to B train charging pump suction. 1B RHR HX TO CHG PUMP SUCT [] Q1E11MOV8706B 7.29.3 Proceed to step 7.30.

****

CAUTION: Injecting through 'A' train and 'B' train flowpaths simultaneously with only one charging pump running could result in pump runout conditions. Therefore, in Step 7.30 RNO the HHSI valves should be closed without delay after MOV8885 is opened.

****

7.30	Check one CHG PUMP in each train - STARTED. [] A train (1A or 1B) amps > 0 [] B train (1C or 1B) amps > 0	7.30 IF an A train CHG PUMP started, THEN proceed to step 7.32 IF NOT, establish B train injection per the following. 7.30.1 Open charging pump recirculation to RCS cold legs valve. CHG PUMP RECIRC TO RCS COLD LEGS [] Q1E21MOV8885 7.30.2 Close HHSI isolation valves. HHSI TO RCS CL ISO [] Q1E21MOV8803A [] Q1E21MOV8803B 7.30.3 Proceed to step 7.32.

Step 7 continued on next page.

Step	Action/Expected Response	Response NOT Obtained

7.31 Open charging pump recirculation to RCS cold legs valve.

CHG PUMP RECIRC
TO RCS COLD LEGS
[] Q1E21MOV8885

7.32 Align charging pump discharge header isolation valves based on 1B charging pump status.

1B Charging Pump Status	Aligned As A Train pump	Aligned As B Train pump	Not Available
CHG PUMP DISCH HDR ISO Q1E21MOV	[] 8132A open [] 8132B open [] 8133A closed [] 8133B closed	[] 8132A closed [] 8132B closed [] 8133A open [] 8133B open	[] 8132A closed [] 8132B closed [] 8133A closed [] 8133B closed

7.33 Verify SI flow - STABLE.

A TRN
HHSI FLOW
[] FI 943

HHSI
B TRN RECIRC
FLOW
[] FI 940

1A(1B)
RHR HDR
FLOW
[] FI 605A
[] FI 605B

7.33 IF at least one train of flow from the containment sump to the RCS can NOT be established or maintained, THEN go to FNP-1-ECP-1.1, LOSS OF EMERGENCY COOLANT RECIRCULATION.

EMERGENCY CORE COOLING SYSTEM

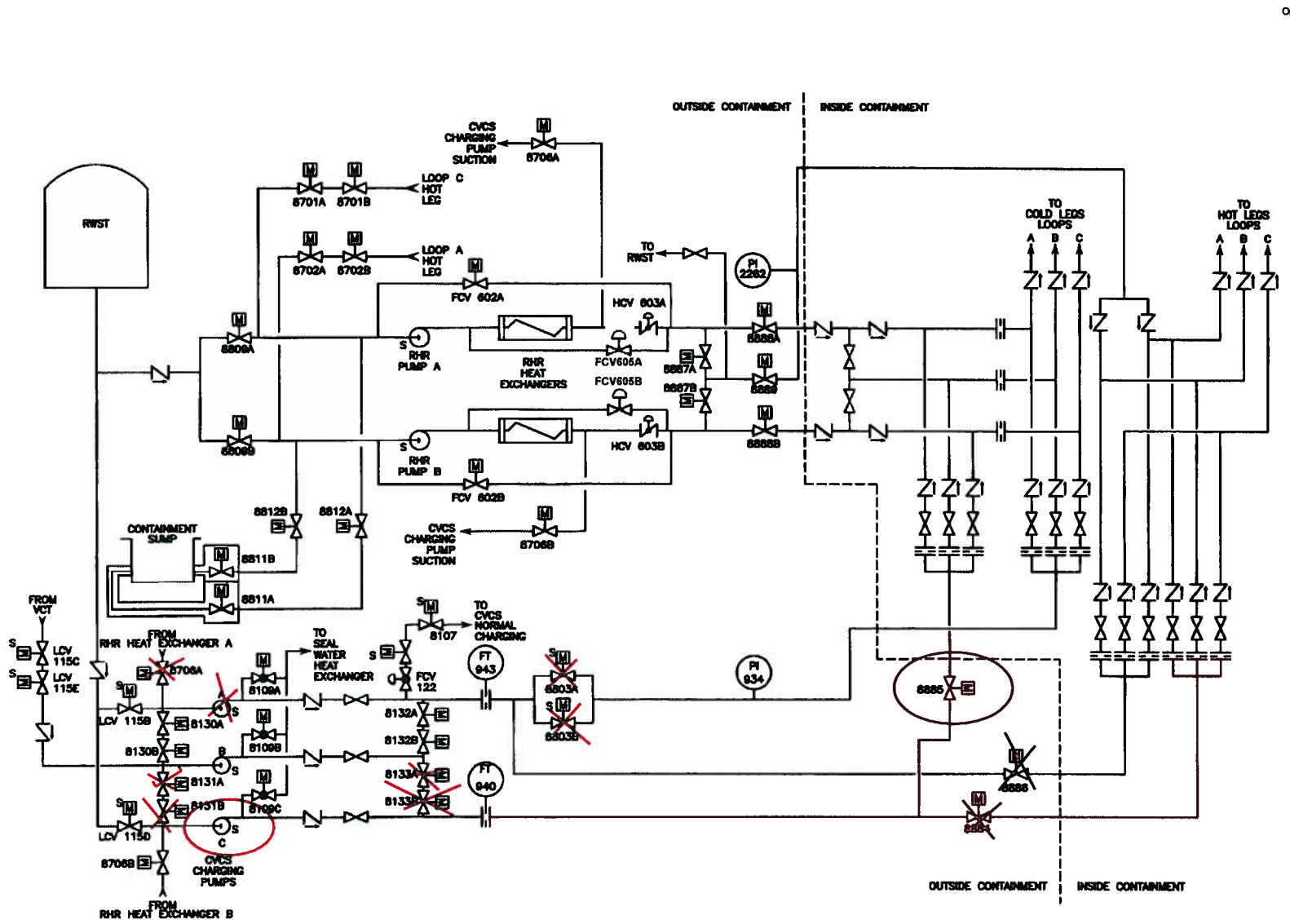

FIGURE 4 - Emergency Core Cooling System

CONDITIONS

When I tell you to begin, you are to **PERFORM THE REQUIRED ACTIONS FOR COLD LEG RECIRCULATION.** The conditions under which this task is to be performed are:

a. A safety injection is in progress following a LOCA.
b. ESP-1.3 has been entered and all steps through Step 7.5 have been completed.
c. 1B Charging pump is aligned to A train.
d. You have been directed to align ECCS for cold leg recirculation starting at Step 7.6 of ESP-1.3.

SIMULATOR JPM D

CRO-043A--MODIFIED

TITLE: Stop the RCP with a degraded seal per the guidance AOP-4.1 and complete the necessary IOAs of AOP-4.0.

EVALUATION LOCATION: ☒ **SIMULATOR** ☐ CONTROL ROOM ☐ CLASSROOM

PROJECTED TIME: 10 MIN SIMULATOR IC NUMBER: IC-221

☒ ALTERNATE PATH ☐ TIME CRITICAL ☐ PRA

JPM DIRECTIONS:

1. Examinee may be given an opportunity to **preview** the task prior to entering the Simulator to lower the required time to conduct the task.

TASK STANDARD: Upon successful completion of this JPM, the examinee will:

- Stop the RCP with a degraded seal per the guidance AOP-4.1 and complete the necessary actions of AOP-4.0.

Examinee:
Overall JPM Performance: **Satisfactory** ☐ **Unsatisfactory** ☐
Evaluator Comments (attach additional sheets if necessary)

EXAMINER: _____

Simulator Setup

EVENT DESCRIPTION	ACTION	DETAILS
Reset into IC-221 for JPM "D"		
Put OPS S/U group on MCB CRT Acknowledge computer alarms		
Run / Freeze Simulator		
Acknowledge annunciators		
Turn Horns ON		
Mark up AOP-4.1 through step 9.1 (step 9.2 not completed)		
Turn on Scaler timer x100 setting		
When directed by the student: Close disconnect for MOV-3350B.	**CMFremote/IRF cAFO335B_cd1 closed**	
Setup IC-221*		
RST IC-11	*	
Increase Seal Injection flows (HK-186 adjustment too high) OPEN 8369A/B/C to 0.09% (sim view or LOA) **REMOTE/E21/IRF LOA-CHG004 0.09** **REMOTE/E21/IRF LOA-CHG005 0.09** **REMOTE/E21/IRF LOA-CHG005 0.09**		
Manually Trip the Rx		
Failure on HV3227 **IMF HIC3227B-B (0 :16) 0.66 10**		
Insert RCP seal malfunction **IMF MAL-cvc27B 4.8%**		
SNP 220	*	

CONDITIONS

When I tell you to begin, you are to **STOP THE RCP WITH A DEGRADED SEAL PER THE GUIDANCE AOP-4.1 AND COMPLETE THE NECESSARY IMMEDIATE OPERATOR ACTIONS OF AOP-4.0.**

The conditions under which this task is to be performed are:

a. The plant is in MODE 3
b. The 1B RCP has a degraded #1 seal.
c. You have been directed to STOP the 1B RCP using AOP-4.1 step 9.2 and complete the required action(s) of AOP-4.0.

INITIATING **CUE**, "You may begin."

EVALUATION CHECKLIST

ELEMENTS:	STANDARDS:	RESULTS: (CIRCLE)
____ START TIME		
(AOP-4.1 step 9.2) * 1. Stop the **1B RCP.**	PLACE the 1B RCP handswitch to STOP and release. Observes amps and flow decreasing.	S / U
(AOP-4.1 step 9.2.1) * 2. Close the pressurizer spray valve for the 1B RCP. [] PK444D for 1B RCP	PLACE PK-444D in MANUAL and VERIFY the CLOSE Pushbutton light is LIT with a Demand is 0%	S / U

NOTE	**Element 3,** contains actions to MONITOR for RCP stopping. This action is NOT critical. The closure of HV-8141B is Critical.

EVALUATION CHECKLIST

	ELEMENTS:	STANDARDS:	RESULTS: (CIRCLE)
	(AOP-4.1 step 9.2.2)		
* 3.	WHEN the RCP has come to a complete stop as indicated by minimum RCS flow in the affected loop, THEN close the appropriate RCP SEAL LEAKOFF VALVE. **[] Q1E21HV8141B**	**MONITORS 1B RCS LOOP flow** on FI-424, 425, 426 for indication to drop to near zero then rebound to ~10% MONITORS TI-422D AND/OR TR-410 AND/OR TR410 for indications of reverse flow. **CLOSES** HV8141B Observes green light LIT	S / U
	(AOP-4.1 step 9.2.3)		
4.	WHEN affected RCP has been removed from service, THEN refer to FNP-1-AOP-4.0, LOSS OF REACTOR COOLANT FLOW.	REFERS to AOP-4.0	S / U

NOTE **Element 5 & 6** may be performed without reference to AOP-4.0.
AOP-4.0 NOTE states the following:
"Steps 1 through 2.1 are IMMEDIATE OPERATOR actions."

	(AOP-4.0 step 1)		
5.	Check 1A and 1B RCPs - RUNNING.	Implements RNO actions	S / U
	(AOP-4.0 step 1 & RNO actions) Manually close pressurizer spray valve for 1B RCP. [ ] 1B RCS loop spray valve PK-444D.	CHECKS PK-444D in MANUAL and VERIFY the CLOSE Pushbutton light is LIT with a Demand is 0%	

NOTE **Element 6** will not be successful and the RNO actions of AOP-4.0 step 2 will be implemented.

EVALUATION CHECKLIST

ELEMENTS:	STANDARDS:	RESULTS: (CIRCLE)
(AOP-4.0 step 2) 6. [CA] Maintain SG narrow range level stable at approximately 65% using: [ ] Main Feedwater Regulating Valves [ ] Main Feedwater Bypass Regulating Valves. [ ] Auxiliary Feedwater Control Valves.	**CHECK** 1B SG Narrow Range LEVEL instruments and notes level > 65%. **CHECK** the following controllers are in Manual and Closed [ ] FCV 489 & GREEN LIGHT LIT [ ] FK488 & GREEN LIGHT LIT [ ] HIC3228BA at 0% Demand **ATTEMPT to close** FCV3227B [ ] HIC3227BA placed to 0% Observes HV3227B red light LIT and FI3229B at 400 gpm.	S / U
(AOP-4.0 step 2.1 RNO) 7. IF SG level rise cannot be controlled, THEN perform the following: (AOP-4.0 step 2.1 RNO) IF main feedwater in service, THEN – MFW is not in service per the initial conditions, mode 3.	**CHECK** main feedwater is NOT in service.	S / U

NOTE **Element 8** will require field actions to close the supply breaker for MOV3350B. This action is directed by SOP-22.0 section 4.12; However the breaker is identified on the hand switch and could be directed without reference to the SOP.

CUE if necessary: "SS acknowledges"

(AOP-4.0 step 2.2 RNO) 8. IF auxiliary feedwater in service, THEN close the affected SG AFW Stop Valve(s). [ ] 1A SG Q1N23MOV3350A **[ ] 1B SG Q1N23MOV3350B** [ ] 1C SG Q1N23MOV3350C	**Identifies the need to close** MOV-3350B.	S / U

EVALUATION CHECKLIST

ELEMENTS:	STANDARDS:	RESULTS: (CIRCLE)

NOTE	**Element 9& 10 have <u>An alternative path for this JPM is to close MOV3764D or 3764B to isolate flow.</u> If this were to be done, the power to MOV3350B would not be critical as well as closing MOV3350B.** The candidate may explain this is the quickest way to secure flow to the SGs and when power is restored to MOV3350B they would close it and then reopen MOVs 3764B/D. This would meet the objective of the task to secure the level rise in the 1B SG, however it is not the flow path of AOP-4.0.

	(AOP-4.0 step 2.2 RNO)		
* 9.	The AFW stop valve (MOV3350B) is powered down AND with SS concurrence, THEN, unlock and close the following breaker(s) as required: (Master Z key.) • **Q1R17BKRFUU5 AFW TO 1B SG STOP VLV MOV3350B**	**DIRECTS** a System Operator to CLOSE **BKR FUU5,** MOV-3350B supply breaker at the MCC-1U. Observes white light LIT above MOV3350B	S / U
	(AOP-4.0 step 2.2 RNO)		
* 10.	Close MOV-3350B, 1B SG STOP VLV	**CLOSES MOV-3350B** Observes green light LIT	S / U

____ STOP TIME

Terminate when flow is secured to the 1B SG.

<u>CRITICAL ELEMENTS</u>: Critical Elements are denoted with an asterisk (*) before the element number.

<u>GENERAL REFERENCES:</u>

1. FNP-1-AOP-4.1, VER 6
2. FNP-1-AOP-4.0, VER 19.0
3. FNP-1-SOP-22.0, VER 65.0
4. KA: 003A1.06 RO 2.9 SRO 3.1
   015/017AA1.05 RO 3.8 SRO 3.8

<u>GENERAL TOOLS AND EQUIPMENT:</u>

1. NONE

Critical ELEMENT justification:

STEP	Evaluation
1.	CRITICAL for completion of the assigned task. 1B RCP will continue to run if this is not completed.
2.	CRITICAL for completion of the assigned task; Failing to complete this action will result in disabling PZR Press Control system.
3.	CRITICAL for completion of the assigned task; Failing to complete this task will result in RCS leakage from the degraded seal.
4.	Not critical since there is no action required, procedural reference/transition
5.	Not critical This action is a repeat of element 1 and is merely a check step.
6.	Not critical since there is no action required: a check step.
7.	Not critical since there is no action required: a check step.
8.	Not critical since there is no action capable until the valve is energized.
9.	CRITICAL since this action is required to complete the required actions (TASK objective.
10.	CRITICAL for achieving TASK objective; Failure to complete this action would result in SG overfill an eventual fill of MS lines.

COMMENTS:

CONDITIONS

When I tell you to begin, you are to **STOP THE RCP WITH A DEGRADED SEAL PER THE GUIDANCE AOP-4.1 AND COMPLETE THE NECESSARY IMMEDIATE OPERATOR ACTIONS OF AOP-4.0**.

The conditions under which this task is to be performed are:

a. The plant is in MODE 3
b. The 1B RCP has a degraded #1 seal.
c. You have been directed to STOP the 1B RCP using AOP-4.1 step 9.2 and complete the required action(s) of AOP-4.0.

Step	Action/Expected Response	Response Not Obtained

NOTE: Steps 1 through 2.1 are IMMEDIATE OPERATOR actions.

__ **1** **Check 1A and 1B RCPs - RUNNING.**

1 Manually close pressurizer spray valve for affected RCP.

[ ] 1A RCS loop spray valve PK-444C
[ ] 1B RCS loop spray valve PK-444D

__ **2** **[CA] Maintain SG narrow range level stable at approximately 65% using:**

[ ] Main Feedwater Regulating Valves
[ ] Main Feedwater Bypass Regulating Valves.
[ ] Auxiliary Feedwater Control Valves.

2 IF SG level rise cannot be controlled, THEN perform the following:

2.1 IF main feedwater in service, THEN close the affected SG Main Feedwater Stop Valve(s)

[ ] 1A SG Q1N21MOV3232A
[ ] 1B SG Q1N21MOV3232B
[ ] 1C SG Q1N21MOV3232C

2.2 IF auxiliary feedwater in service, THEN close the affected SG AFW Stop Valve(s)

[ ] 1A SG Q1N23MOV3350A
[ ] 1B SG Q1N23MOV3350B
[ ] 1C SG Q1N23MOV3350C

__ **3** **[CA] Monitor Tavg for all three RCS loops ≥ 541°F. (TS 3.4.2)**

3 Perform the following..

3.1 IF the main generator is ON LINE, THEN trip the reactor and go to FNP-1-EEP-0, REACTOR TRIP OR SAFETY INJECTION

3.2 IF the main generator is OFF LINE, THEN raise Tavg ≥ 541°F within 30 minutes

3.2.1 Adjust steam dumps to reduce secondary power demand as necessary

* Step 3 continued on next page

Page Completed

Step	Action/Expected Response	Response NOT Obtained

9.2 WHEN the reactor is shutdown, THEN STOP the affected RCP(s).

9.2.1 IF 1A OR 1B RCP is secured, THEN close the pressurizer spray valve for the affected RCP.

[] PK444C for 1A RCP
[] PK444D for 1B RCP

9.2.2 WHEN the RCP has come to a complete stop as indicated by minimum RCS flow in the affected loop, THEN close the appropriate RCP SEAL LEAKOFF VALVE.

[] Q1E21HV8141A
[] Q1E21HV8141B
[] Q1E21HV8141C

9.2.3 WHEN affected RCP has been removed from service, THEN refer to FNP-1-AOP-4.0, LOSS OF REACTOR COOLANT FLOW.

9.2.4 Refer to Technical Specifications sections 3.4 and 3.5.

9.3 Go to procedure and step in effect.

SIMULATOR JPM E

CRO-NEW
TITLE: Isolate SW to the affected CTMT Cooler using SOP-12.1 section 4.6.
EVALUATION LOCATION: ☒ **SIMULATOR** ☐ CONTROL ROOM ☐ CLASSROOM
PROJECTED TIME: 12 MIN SIMULATOR IC NUMBER: IC-222
☐ ALTERNATE PATH ☐ TIME CRITICAL ☐ PRA

JPM DIRECTIONS:

1. Examinee may be given an opportunity to **preview** the task prior to entering the Simulator to lower the required time to conduct the task.

TASK STANDARD: Upon successful completion of this JPM, the examinee will:

- Isolate SW to the affected CTMT Cooler using SOP-12.1 section 4.6
- Start a Second A train CTMT Cooler.

Examinee:	
Overall JPM Performance:	**Satisfactory** ☐ **Unsatisfacto** ☐
Evaluator Comments (attach additional sheets if necessary)	

EXAMINER: _____

EVENT DESCRIPTION	ACTION	DETAILS
Reset into IC-222 for JPM "E"		
Put STA group on MCB CRT Acknowledge computer alarms		
Run / Freeze Simulator		
Acknowledge annunciators		
Turn Horns ON		
Setup IC-222*		
RST IC-73	*	
imf Mal-RCS2A TRUE **imf Mal-eps1 1** **imf MAL-Mss1A 2** **imf cBK8820B_d_cp2 True**		
simulates a SW break on 1C Cnmt Cooler IMF FI3014B 1000		
>Temperature is elevated on 1D outlet due to reduced SW flow through that cooler >Temperature is elevated on 1C outlet due to the backflow from 1D cooler into the break (NO check valves) **IMF TE3025C 105** **IMF TE3025D 105**		
>the following failures are inserted immediately but can be inserted over time if desired **Imf LT3594A 8.2** **imf LT3594B 8.2**		
>perform all Actions of E-0 >Control AFW to 395 gpm total Flow to B & C SGs >use AFW FCVs to stop AFW flow to A SG from both TD and MD AFW pumps >Foldout page criteria for Charging pump miniflows >Attachment 2 of E-0 (condensate/HDP/ SGBD valves) >Perform all Actions of E-2 for A SG Faulted >Perform all actions of E-1 through step 16 > fill generators B&C to 61% > Close ECCS disconnects >Perform ESP-1.3 >A train CNMT spray only running RWST level ~10 ft when alignment complete **IMF cBkp01a_D_CC1 --- trips the 1A CS pump on OC.**		

>SET TRIGGERS:
>Trigger 1: When First valve closed (3019C) then FI-3013B will lower to a higher value.
Trgset 1 "FI3013B==4500"
Trg 1 "imf FI3013B (0 10) 3600 33"

>Trigger 2-3: When MOV-3019C is closed and MOV3019D remains open, SW flow will be diverted through the 1D Cnmt cooler into the 1C CNMT cooler via reverse flow, Both Cnmt Cooler discharge temps lower to normal.
Trgset 2 "RNC3019C < 0.99 && FT3013BB > 14.0"
Trg 2 "imf TE3025D 82 63"
Trgset 3 "RNC3019C < 0.99 && RNC3019D < 0.97 && TI3025D > 90"
Trg 3 "imf TE3025C 100 23"
>Trigger 4-5: WHEN FLOW TO BREAK IS ISOLATED RAMP INDICATION TO NORMAL SINGLE COOLER FLOW & RETURN D COOLER OUTLET TEMP TO EXPECTED TEMPS.
Trgset 4 " RNC3019C < 0.60 && RNC3441C < 0.99 && FT3013BB >12.0"
Trg 4 "imf FI3014B 3036 24"
Trgset 5 "RNC3441C < 0.50 && RNC3019D < 0.99"
Trg 5 "IMF TI3025C 100 93"

>Trigger 6-8: Deletes all malfunctions inserted to restore NORMAL response for the 1D Cnmt Cooler when 1C Cnmt Cooler is isolated.
Trgset 6 "RNC3019C < 0.10 && RNC3441C <0.90 && FT3013BB > 12.0"
Trg 6 "IMF FI3013B 3036 28"
Trgset 7 "RNC3441D < 0.60 && RNC3019D <0.60 "
Trg 7 "IMF FI3014B 0 36"
Trgset 8 "RNC3019C < 0.40 && RNC3019D <0.80 && FT3014BB > 12.0"
Trg 8 "IMF FI3013B 0 32 "

When all flow is terminated, these triggers remove malfunctions on flow meters.
Trgset 9 "RNC3019C < 0.1. && RNC3019D <0.1"
Trg 9 "DMF FI3013B"
Trgset 10 "RNC3441D < 0.1. && RNC3441C <0.1"
Trg 10 "DMF FI3014B"
Trgset 11 "RNC3019C < 0.1. && RNC3441D <0.1"
Trg 11 "DMF FI3013B"

>If 1C COOLER ISOLATED BEFORE 1D IS ISOLATED, these triggers allow instruments to respond as modeled.
Trgset 12 "RNC3019C < 0.1 && RNC3441C <0.1 && FI3013B > 2800 && ft3013bb > 10.0"
Trg 12 "DMF FI3013B"
Trgset 13 "RNC3019C < 0.1 && RNC3441C <0.1 && FI3014B > 2800 && ft3013bb > 10.0"
Trg 13 "DMF FI3014B"

SNP 222	*	

CONDITIONS

When I tell you to begin, you are **TO ISOLATE SW TO THE AFFECTED CTMT COOLER USING SOP-12.1 SECTION 4.6** and **VERIFY at least two OPERABLE Containment Coolers are running in SLOW speed.**

The conditions under which this task is to be performed are:

a. A Large Break LOCA and LOSP have occurred.
b. 1-2A DG failed to auto-start and has just been restarted using AOP-5.0.
c. Both trains of Containment Spray are not available.
d. FRP-Z.2, Response to Containment Flooding, has been implemented.
e. The TSC has identified a SW leak on the B Train CTMT Coolers.
f. ALL available Containment Fan Coolers are required due to a failure of both trains of Containment Spray.
g. You have been directed to Isolate SW to B Train CTMT Coolers using SOP-12.1 section 4.6 and VERIFY at least two OPERABLE Containment Coolers are running in SLOW speed.

INITIATING **CUE**, "You may begin."

EVALUATION CHECKLIST

ELEMENTS:	STANDARDS:	RESULTS: (CIRCLE)
____ START TIME		

NOTE
- The procedure allows isolation of the coolers individually or together. The candidate may elect to isolate both coolers with one pass through the procedure or to isolate a single cooler and perform two passes through the procedure.
- The leak is located on the inlet piping of the 1C containment Cooler, isolation of only the supply line (3019C & D) will not terminate the leak from the discharge line (leaking check valve): CRITICAL actions are to close:
  - MOV3019C & MOV3441C
- The indications will demonstrate that the leak is isolated if the following steps are completed on 1C containment cooler first. IF the candidate reports this indication to the SS provide the following CUE: **"SS acknowledges, continue with task as directed."**

(SOP-12.1 step 4.6.1)

*	1. For the affected CTMT cooler, close SW TO CTMT CLR valve: **SW TO 1C CTMT CLR Q1P16MOV3019C** **SW TO 1D CTMT CLR Q1P16MOV3019D**	***CLOSE MOV-3019C** & CLOSE MOV-3019D Observes the green lights LIT	S / U

EVALUATION CHECKLIST

	ELEMENTS:	STANDARDS:	RESULTS: (CIRCLE)
	(SOP-12.1 step 4.6.2)		
* 2.	IF desired, THEN close SW FROM CTMT CLR on the affected cooler: **SW FROM 1C CTMT CLR Q1P16MOV3441C** **SW FROM 1D CTMT CLR Q1P16MOV3441D**	***CLOSE MOV-3441C** & CLOSE MOV-3441D Observes the green lights LIT	S / U
	(SOP-12.1 step 4.6.3)		
3.	IF desired, THEN close, or verify closed, EMERG SW FROM CTMT CLR on the affected cooler. **EMERG SW FROM 1C CTMT CLR Q1P16MOV3024C** **EMERG SW FROM 1D CTMT CLR Q1P16MOV3024D**	**CLOSE MOV-3024C & CLOSE MOV-3024D** Observes the green lights LIT	S / U

NOTE
- **Element 4 & 5 are** not required to be implemented for this task.
  Containment cooler status is as it is due to:
- BOTH B train fans are running due to the OPERATOR's completion of EEP-0 attachment 2.
- ONLY one A train fan is running since only the LOSP sequencer has run following AOP-5.0 actions.

	(SOP-12.1 step 4.6.4)		
4.	IF desired, THEN stop the affected CTMT cooler **1C containment cooler** **1D containment cooler**	**STOP 1C Containment Cooler** **STOP 1D Containment Cooler** Observes the green lights LIT	S / U
	(SOP-12.1 step 4.6.5)		
5.	IF stopped in the previous step, THEN check CTMT CLR DISCH CLOSED light illuminated: **CTMT CLR 1C DISCH 3186C** **CTMT CLR 1D DISCH 3186D**	**CHECK** closed light LIT for dampers: 3186C 3186D Observes the green lights LIT	S / U

NOTE **Element 6 & 7 are** not required to be implemented for this task, however the candidate may elect to do so as they are part of the procedure section.

	(SOP-12.1 step 4.6.6)		
6.	IF required, THEN verify that an unaffected CTMT cooler in that train is selected for auto-start: 1C containment cooler 1D containment cooler	Not applicable, since Both B train CTMT Coolers have no SW aligned and are not operable.	S / U

EVALUATION CHECKLIST

ELEMENTS:	STANDARDS:	RESULTS: (CIRCLE)
(SOP-12.1 step 4.6.7) 7. Refer to the following for operability requirements: Technical Specifications SR 3.6.6.2 and SR 3.6.6.3 FNP-1-STP-17.0, Containment Cooling System Train A(B) Operability Test	Not applicable, since Both B train CTMT Coolers have no SW aligned and are not operable. TS are not applicable during accident response. **CUE if required**: "Another operator will review these requirements"	S / U

NOTE

- **Element 8 can** be accomplished with or without SOP-12. If SOP-12 is used, the candidate may choose:
  - — Partial Section 4.1 contains checking the SW valve status of the 1B CTMT Cooler then starting the fan in SLOW speed at step 4.1.6, the remainder of this section is NOT completed.
  - — Partial Section 4.7 in which only step 4.7.1.3 and 4.7.1.4 are completed.
- **Element 8** will impact Diesel Generator Loading, and diesel MW loading should be checked prior to starting any additional loads on the diesel.

(SOP-12.1 step 4.7.1.3) * 8. Start containment cooler fans in SLOW speed: **1B containment cooler fan**	**START** the 1B containment cooler in **SLOW** speed. Observes the red light LIT	S / U
(SOP-12.1 step 4.7.1.4) 9. Check applicable CTMT CLR DISCH OPEN light illuminated: **CTMT CLR 1B DISCH 3186B**	**Check the proper damper alignment:** Observes 3186B red light LIT	S / U

____ STOP TIME

Terminate when 1B ctmt cooler is running.

CRITICAL ELEMENTS: Critical Elements are denoted with an asterisk (*) before the element number.

GENERAL REFERENCES:

1. FNP-1-SOP-12.1, VER 40
2. KA: 022A2.05 RO 3.1 SRO 3.5
   W/E015EA1.1 RO 2.9 SRO 3.0
   W/E015EA2.2 RO 2.9 SRO 3.3

GENERAL TOOLS AND EQUIPMENT:

1. NONE

Critical ELEMENT justification:

STEP	Evaluation
1.	CRITICAL for completion of the assigned task; Failing to close **MOV-3019C** will prevent isolation of the SW supply line leak into containment and result in continued FILL of Containment.
2.	CRITICAL for completion of the assigned task; Failing to close **MOV-3441C** will prevent isolation of the SW leak into containment due to a leaking SW return line Check valve and result in continued FILL of Containment.
3.	Not critical since this action will not isolate SW flow; this is a "bypass" valve to an MOV which is operated on the BOP.
4.	Not critical since the fans are running and is not required to be secured for this condition.
5.	Not critical since stopping the fans are not required in the previous step and is the fans are secured the dampers will close.
6.	Not critical since Both B train coolers SW is isolated, this action is not required.
7.	Not critical since this is an emergency response, this action is not yet required.
8.	CRITICAL since this action is required to complete the required actions (TASK objective). Failure to complete this action will leave only 1 CTMT cooler in operation with NO CTMT SPRAY pumps, under these conditions 2 CTMT coolers are required.
9.	Not critical since there is no failure installed, this is a check step for normal operation.

COMMENTS:

CONDITIONS

When I tell you to begin, you are **TO ISOLATE SW TO THE AFFECTED CTMT COOLER USING SOP-12.1 SECTION 4.6** and **VERIFY at least two OPERABLE Containment Coolers are running in SLOW speed.**

The conditions under which this task is to be performed are:

a. A Large Break LOCA and LOSP have occurred.
b. 1-2A DG failed to auto-start and has just been restarted using AOP-5.0.
c. Both trains of Containment Spray are not available.
d. FRP-Z.2, Response to Containment Flooding, has been implemented.
e. The TSC has identified a SW leak on the B Train CTMT Coolers.
f. ALL available Containment Fan Coolers are required due to a failure of both trains of Containment Spray.
g. You have been directed to Isolate SW to B Train CTMT Coolers using SOP-12.1 section 4.6 and VERIFY at least two OPERABLE Containment Coolers are running in SLOW speed.

4.5 Refueling Water Surface Ventilation Operation

NOTE

The refueling water surface exhaust may be temporarily routed to a filtration system such as the containment pre-access filtration unit and/or portable filtration unit for ALARA purposes during refueling operations. However, the exhaust flow shall NOT be directed to the containment purge intake. (DCP 97-1-9220)

4.5.1 **Place** refueling water surface ventilation in service as follows:

4.5.1.1 **Start** the refueling water surface exhaust fan 2. ☐

4.5.1.2 **Start** the refueling water surface supply fan 1. ☐

4.5.2 **Remove** the refueling water surface ventilation from service as follows:

4.5.2.1 **Stop** refueling water surface supply fan 1. ☐

4.5.2.2 **Stop** refueling water surface exhaust fan 2. ☐

4.6 Isolating and Restoring Service Water to Individual CTMT Coolers

NOTES

It is permissible to use both the inlet and outlet valves to isolate individual CTMT coolers. Overpressure protection for the CTMT Coolers are provided by relief valves located inside CTMT. See CR 2009114121

Movats testing of CTMT CLR SW MOV's can be performed utilizing this section of the procedure AFTER the desired CTMT cooler has been isolated. This includes CTMT CLR MOV's 3019A,B,C,D and MOVs 3023A,B,C,D.

4.6.1 For the affected CTMT cooler, **close** SW TO CTMT CLR valve:

4.6.1.1 SW TO 1A CTMT CLR Q1P16MOV3019A ☐

4.6.1.2 SW TO 1BCTMT CLR Q1P16MOV3019B ☐

4.6.1.3 SW TO 1C CTMT CLR Q1P16MOV3019C ☐

4.6.1.4 SW TO 1D CTMT CLR Q1P16MOV3019D ☐

4.6.2 IF desired, THEN **close** SW FROM CTMT CLR on the affected cooler:

4.6.2.1 SW FROM 1A CTMT CLR Q1P16MOV3441A ☐

4.6.2.2 SW FROM 1B CTMT CLR Q1P16MOV3441B ☐

4.6.2.3 SW FROM 1C CTMT CLR Q1P16MOV3441C ☐

4.6.2.4 SW FROM 1D CTMT CLR Q1P16MOV3441D ☐

4.6.3 IF desired, THEN **close**, or **verify closed**, EMERG SW FROM CTMT CLR on the affected cooler.

- 4.6.3.1 EMERG SW FROM 1A CTMT CLR Q1P16MOV3024A ☐
- 4.6.3.2 EMERG SW FROM 1B CTMT CLR Q1P16MOV3024B ☐
- 4.6.3.3 EMERG SW FROM 1C CTMT CLR Q1P16MOV3024C ☐
- 4.6.3.4 EMERG SW FROM 1D CTMT CLR Q1P16MOV3024D ☐

4.6.4 IF desired, THEN **stop** the affected CTMT cooler

- 4.6.4.1 1A containment cooler ☐
- 4.6.4.2 1B containment cooler ☐
- 4.6.4.3 1C containment cooler ☐
- 4.6.4.4 1D containment cooler ☐

4.6.5 IF stopped in the previous step, THEN **check** CTMT CLR DISCH CLOSED light illuminated:

- 4.6.5.1 CTMT CLR 1A DISCH 3186A ☐
- 4.6.5.2 CTMT CLR 1B DISCH 3186B ☐
- 4.6.5.3 CTMT CLR 1C DISCH 3186C ☐
- 4.6.5.4 CTMT CLR 1D DISCH 3186D ☐

4.6.6 IF required, THEN **verify** that an unaffected CTMT cooler in that train is selected for auto-start:

- 4.6.6.1 1A containment cooler ☐
- 4.6.6.2 1B containment cooler ☐
- 4.6.6.3 1C containment cooler ☐
- 4.6.6.4 1D containment cooler ☐

4.6.7 **Refer** to the following for operability requirements:

- 4.6.7.1 Technical Specifications SR 3.6.6.2 and SR 3.6.6.3 ☐
- 4.6.7.2 FNP-1-STP-17.0, Containment Cooling System Train A(B) Operability Test ☐

4.6.8 WHEN it is desired to return the affected cooler to service, THEN **perform** the following:

4.6.8.1 **Verify** SW FROM CTMT CLR OPEN on the affected cooler:

- 4.6.8.1.1 SW FROM 1A CTMT CLR Q1P16MOV3441A ☐
- 4.6.8.1.2 SW FROM 1B CTMT CLR Q1P16MOV3441B ☐
- 4.6.8.1.3 SW FROM 1C CTMT CLR Q1P16MOV3441C ☐
- 4.6.8.1.4 SW FROM 1D CTMT CLR Q1P16MOV3441D ☐

4.6.8.2 For the affected CTMT cooler, **open** SW TO CTMT CLR:

- 4.6.8.2.1 SW TO 1A CTMT CLR Q1P16MOV3019A ☐
- 4.6.8.2.2 SW TO 1B CTMT CLR Q1P16MOV3019B ☐
- 4.6.8.2.3 SW TO 1C CTMT CLR Q1P16MOV3019C ☐
- 4.6.8.2.4 SW TO 1D CTMT CLR Q1P16MOV3019D ☐

4.6.8.3 IF required, THEN **start** the affected CTMT cooler:

- 4.6.8.3.1 1A containment cooler ☐
- 4.6.8.3.2 1B containment cooler ☐
- 4.6.8.3.3 1C containment cooler ☐
- 4.6.8.3.4 1D containment cooler ☐

4.6.8.4 IF started in the previous step, THEN **check** applicable CTMT CLR DISCH OPEN light illuminated:

- 4.6.8.4.1 CTMT CLR 1A DISCH 3186A ☐
- 4.6.8.4.2 CTMT CLR 1B DISCH 3186B ☐
- 4.6.8.4.3 CTMT CLR 1C DISCH 3186C ☐
- 4.6.8.4.4 CTMT CLR 1D DISCH 3186D ☐

4.7 Shifting Containment Cooling Fan Speeds

4.7.1 Containment Cooler Fans

4.7.1.1 **Stop** containment cooler fans as required:

- 4.7.1.1.1 1A containment cooler fan ☐
- 4.7.1.1.2 1B containment cooler fan ☐
- 4.7.1.1.3 1C containment cooler fan ☐
- 4.7.1.1.4 1D containment cooler fan ☐

4.7.1.2 **Check** CTMT CLR DISCH CLOSED light illuminated for coolers shutdown:

- 4.7.1.2.1 CTMT CLR 1A DISCH 3186A ☐
- 4.7.1.2.2 CTMT CLR 1B DISCH 3186B ☐
- 4.7.1.2.3 CTMT CLR 1C DISCH 3186C ☐
- 4.7.1.2.4 CTMT CLR 1D DISCH 3186D ☐

4.7.1.3 **Start** containment cooler fans in SLOW (FAST) speed:

- 4.7.1.3.1 1A containment cooler fan ☐
- 4.7.1.3.2 1B containment cooler fan ☐
- 4.7.1.3.3 1C containment cooler fan ☐
- 4.7.1.3.4 1D containment cooler fan ☐

4.7.1.4 **Check** applicable CTMT CLR DISCH OPEN light illuminated:

- 4.7.1.4.1 CTMT CLR 1A DISCH 3186A ☐
- 4.7.1.4.2 CTMT CLR 1B DISCH 3186B ☐
- 4.7.1.4.3 CTMT CLR 1C DISCH 3186C ☐
- 4.7.1.4.4 CTMT CLR 1D DISCH 3186D ☐

4.7.2 Containment Dome Recirc Fans

4.7.2.1 **Place** CTMT DOME RECIRC FANS in HIGH (LOW) speed as necessary:

- 4.7.2.1.1 1A CTMT DOME RECIRC FAN ☐
- 4.7.2.1.2 1B CTMT DOME RECIRC FAN ☐
- 4.7.2.1.3 1C CTMT DOME RECIRC FAN ☐
- 4.7.2.1.4 1D CTMT DOME RECIRC FAN ☐

SIMULATOR JPM F.

CRO-415A-modified
TITLE: START THE 2C DIESEL GENERATOR
EVALUATION LOCATION: ☒ **SIMULATOR** ☐ CONTROL ROOM ☐ CLASSROOM
PROJECTED TIME: 10 MIN SIMULATOR IC NUMBER: IC-223
☐ ALTERNATE PATH ☐ TIME CRITICAL ☐ PRA

JPM DIRECTIONS:

1. The actions of this task will be performed on an Active Simulator in which the examinee may diagnose the correctness of system response to his/her actions and respond to any abnormal conditions which may arise.

TASK STANDARD: Upon successful completion of this JPM, the examinee will:

- Conduct a Load Shed, start the 2C DG and start a minimum of one Service Water pump to provide cooling water to the 2C DG.

Examinee:	
Overall JPM Performance:	**Satisfactory** ☐ **Unsatisfactory** ☐
Evaluator Comments (attach additional sheets if necessary)	

EXAMINER: _____

Developer	Name: Howard Fitzwater	Date: 1/6/2011
NRC Approval	SEE NUREG 1021 FORM ES-301-3	

DESCRIPTION	ACTION BUTTONS	DETAILS
Reset into IC 223 for JPM F		
Put OPS group on MCB CRT and acknowledge computer alarms		
Place DTO on 2B DG		
Run/ Freeze Simulator		
Acknowledge annunciators		
Turn Horns ON		
IC SETUP	*	
RST 187	*	
IC-187 contains the following required malfunctions: MAL-DSG007 cNCPsw1E_d_cc 5 cNCPSW1E_d_cc6 cNCPSW1F_d_cc5 cNCPSW1F_d_cc6 MAL-EPS1 MAL-RCS2A	*	
Place 1B DG in MODE 3 Close the following breakers to simulate a failure of the load shed sequencer: 1A CCW pump 1D & 1E SW pumps 1B RHR pump 1B CS pump 1B charging pump And the 1B AFW pump	*	Modified setup to ensure the critical steps are in fact "critical".
SNP 223	*	

CONDITIONS

When I tell you to begin, you are to **START THE 2C DIESEL GENERATOR.** The conditions under which this task is to be performed are:

a. Unit 1 has just experienced a safety injection and a LOSP; Unit 2 has experienced a LOSP.
b. The 1B Diesel Generator has experienced a start failure and could not be started.
c. 2B DG is tagged out.
d. You have been directed by the Shift Manager to restore power to the 1G 4160V emergency bus using AOP-5.1, starting at step 2.6.
e. Plant conditions **DO NOT** permit a PRE-LUBE of 2C DG.

INITIATING **CUE**, "You may begin."

EVALUATION CHECKLIST

	ELEMENTS:	**STANDARDS:**	**RESULTS: (CIRCLE)**
START TIME:			
* 1.	(step 2.6) Verify load shed of major loads on 1G and 1J 4160V busses.	Only those items with a * and are **BOLDED** are critical and handswitch required to be taken to off, reset or stop.	S / U

Handswitches with OPEN indication will be taken to off, reset or stop.
The green light will need to be LIT for each of the components below.

		As **Found** LIGHT LIT	**AS LEFT** Light LIT
[]	1B CCW PUMP B TRN BKR DG05 OPEN	green	green
* []	**1A CCW PUMP BKR DG04 OPEN**	**RED**	green
[]	1C SW PUMP B TRN BKR DL05 OPEN	green	green
* []	**1D SW PUMP BKR DL03 OPEN**	**RED**	green
* []	**1E SW PUMP BKR DL04 OPEN**	**RED**	green
[]	#4 RW PUMP BKR DJ03-1 OPEN	green	green
[]	#5 RW PUMP BKR DJ04-1 OPEN	green	green
[]	1A CRDM CLG FAN BKR EE13 OPEN	green	green

	ELEMENTS:	STANDARDS:		RESULTS: (CIRCLE)
* []	**1B CS PUMP BKR DG11 OPEN**	**RED**	green	
* []	**1B RHR PUMP BKR DG09 OPEN**	**RED**	green	
[]	1B CHG PUMP B TRN BKR DG07 OPEN	green	green	
* []	**1C CHG PUMP BKR DG06 OPEN**	**RED**	green	
* []	**1B MDAFWP BKR DG10 OPEN**	**RED**	green	
	(step 2.7.1) 2. Prelube of the DG is not required or expected due to conditions provided.	**If the SS asked,** **Cue: PRE-LUBE is not required.**		
	(step 2.7.2) 3. Verify 2C DG MODE SELECTOR SWITCH in MODE 1.	2C DG MODE SELECTOR SWITCH position **CHECKED** in MODE 1 position.		S / U
*	(step 2.7.3) 4. Place 2C DG UNIT SELECTOR SWITCH in Unit 1.	2C DG UNIT SELECTOR SWITCH is **PLACED** in Unit 1 position.		S / U
	5. (step 2.7.4) Verify open UNIT 2 SW TO/FROM DG BLDG - B HDR Q2P16V518/536. **Unit 2 MCB**	Calls Unit 2 to check on status of UNIT 2 SW TO/FROM DG BLDG - B HDR Q2P16V518/536 checked. **CUE: Q2P16V518/536 are open on Unit 2.**		S / U
	(step 2.7.5) 6. Verify open 2C DIESEL GENERATOR SW SUPP TO/FROM UNIT 2 Q1P16V520/528	V520/528 **CHECKED** OPEN, red light is LIT.		S / U
*	(step 2.7.6) 7. When load shed completed, depress 2C DG DIESEL START pushbutton	2C DG DIESEL **START** pushbutton depressed.		S / U
	(step 2.7.7) 8. Verify 2C DG starts.	Indications for verification that 2C DG started are checked such as speed, alarms, voltage and hertz.		S / U

ELEMENTS:	STANDARDS:	RESULTS: (CIRCLE)
(step 2.7.8) 9. Verify Unit 1 2C DG OUTPUT BKR **DJ06** closes.	Indication for Unit 1 2C DG OUTPUT BKR **DJ06 CHECKED** and the red light is LIT.	S / U
(step 2.7.9) 10. Verify 1J 4160V bus tie to 1G 4160V bus BKR **DG13** closed.	Indication for BKR **DG13 CHECKED** and the red light is LIT.	S / U
(step 2.8) 11. Verify 1G 4160V bus tie to 1L 4160V bus BKR **DG02** closed	Indication for BKR **DG02 CHECKED** and the red light is LIT.	S / U

Note: Only one SW pump is required to SATISFY THE CRITICAL PORTION of the below task to prevent DG overheating.

(step 2.9) * 12. Start two SW PUMPS (1D, 1E, or 1C).	***SEE NOTE ABOVE:** **START** two (2) B Train SW pumps. 1D 1E 1C And **CHECK** the red light is LIT, SW header pressure will rise.	S / U
(step 2.10) 13. Verify open SW TO/FROM DG BLDG - B HDR Q1P16V518/536.	Indication for Q1P16V518/536 checked and the red light is LIT.	S / U
(step 2.11) 14. Verify open 2C DIESEL GENERATOR SW SUPP TO/FROM UNIT 1 Q1P15V521/529.	Indications for Q1P16V521/529 checked and the red light is LIT.	S / U

____ STOP TIME

Terminate when at least one SW pump is running or candidate says the 2C DG is ready for loading.

CRITICAL ELEMENTS: Critical Elements are denoted with an asterisk (*) before the element number.

GENERAL REFERENCES:

1. FNP-1-AOP-5.1, Version 9.0

2. K/As: 064A4.06 RO-3.9 SRO-3.9
055EA1.02 RO-4.3 SRO-4.4

GENERAL TOOLS AND EQUIPMENT:

Critical ELEMENT justification:

ELEMENT	Evaluation
1	**Critical:** Task completion: The * steps are critical since these breakers are closed and this would result in a DG overload condition and possible damage if the DG was started with the breakers closed.
2-3	**NOT Critical:** The prelube is covered in the conditions as not required to be done and the MSS is already in Mode 1.
4	**Critical:** Task completion: to load the 2C DG on Unit 1 this has to be completed.
5-6	**NOT Critical:** These valves are in the proper position and if not checked result in no problem with the completion of the task.
7	**Critical:** Task completion: If the DG start PB was not depressed then the DG would not start and the task could not be completed.
8-11	**NOT Critical:** Completion of these steps is not critical since if not checked the task would be completed successfully without them.
12	**Critical:** Task completion: Since there are no SW pumps running, the DG would eventually sustain damage if at least one SW pump was not started.
13-14	**NOT Critical:** These valves are in the proper position and if not checked result in no problem with the completion of the task.

COMMENTS:

CONDITIONS

When I tell you to begin, you are to **START THE 2C DIESEL GENERATOR.** The conditions under which this task is to be performed are:

a. Unit 1 has just experienced a safety injection and a LOSP; Unit 2 has experienced a LOSP.
b. The 1B Diesel Generator has experienced a start failure and could not be started.
c. 2B DG is tagged out.
d. You have been directed by the Shift Manager to restore power to the 1G 4160V emergency bus using AOP-5.1, starting at step 2.6.
e. Plant conditions **DO NOT** permit a PRE-LUBE of 2C DG.

Step	Action/Expected Response	Response Not Obtained

2.6 Verify load shed of major loads on 1G and 1J 4160 V busses.

[ ] 1B CCW PUMP B TRN BKR DG05 open
[ ] 1A CCW PUMP BKR DG04 open
[ ] 1C SW PUMP B TRN BKR DL05 open
[ ] 1D SW PUMP BKR DL03 open
[ ] 1E SW PUMP BKR DL04 open
[ ] #4 RW PUMP BKR DJ03-1 open
[ ] #5 RW PUMP BKR DJ04-1 open
[ ] 1A CRDM CLG FAN BKR EE13 open
[ ] 1B CS PUMP BKR DG11 open
[ ] 1B RHR PUMP BKR DG09 open
[ ] 1B CHG PUMP B TRN BKR DG07 open
[ ] 1C CHG PUMP BKR DG06 open
[ ] 1B MDAFWP BKR DG10 open

2.7 Perform 2C DG SBO start as follows.

2.7.1 IF plant conditions permit, THEN prelube 2C DG, 3 minutes maximum.

2.7.2 Verify 2C DG MODE SELECTOR SWITCH in MODE 1.

2.7.3 Place 2C DG UNIT SELECTOR SWITCH in Unit 1.

****

CAUTION: The following steps assume Unit 2 Service Water system is unaffected by the loss of Unit 1 electrical power. IF Unit 2 Service Water is unavailable, THEN steps 2.7.6 through 2.11 must be completed expeditiously to ensure adequate DG cooling.

****

2.7.4 Verify open Unit 2 SW TO/FROM DG BLDG - B HDR Q2P16V518/536. (Unit 2 MCB)

2.7.5 Verify open 2C DIESEL GENERATOR SW SUPP TO/FROM UNIT 2 Q1P16V520/528.

* Step 2 continued on next page

Page Completed

Step	Action/Expected Response	Response Not Obtained

2.7.6 WHEN load shed verified, THEN depress 2C DG DIESEL START pushbutton.

2.7.7 Verify 2C DG starts.

NOTE: The LOSP sequencer should run when breaker closes, if a Safety Injection signal is NOT present.

2.7.8 Verify Unit 1 2C DG OUTPUT BKR DJ06 closes.

2.7.9 Verify 1J 4160 V bus tie to 1G 4160 V bus BKR DG13 closed.

2.8 Verify 1G 4160 V bus tie to 1L 4160 V bus BKR DG02 closed.

2.9 Start two SW PUMPS (1D, 1E, 1C).

2.10 Verify open SW TO/FROM DG BLDG - B HDR Q1P16V518/536. (Unit 1 MCB)

2.11 Verify open 2C DIESEL GENERATOR SW SUPP TO/FROM UNIT 1 Q1P16V521/529.

* Step 2 continued on next page

Page Completed

SIMULATOR JPM G.

CRO-328B
TITLE: Restore Instrument Air To Containment
EVALUATION LOCATION: ☒ **SIMULATOR** ☐ CONTROL ROOM ☐ CLASSROOM
PROJECTED TIME: 10 MIN SIMULATOR IC NUMBER: JPM IC-224
☒ **ALTERNATE PATH** ☐ TIME CRITICAL ☐ PRA

JPM DIRECTIONS:

1. Examinee may be given an opportunity to **preview** the task prior to entering the Simulator to lower the required time to conduct the task.
2. The actions of this task are intended to be performed on an Active Simulator in which the examinee may diagnose the correctness of system response to his/her actions and respond to any abnormal conditions which may arise.

TASK STANDARD: Upon successful completion of this JPM, the examinee will:

- Power up the 1H Load Center and then align the BOP air valves to containment.

Examinee:
Overall JPM Performance: **Satisfactory** ☐ **Unsatisfactory** ☐
Evaluator Comments (attach additional sheets if necessary)

EXAMINER: _____

Simulator setup/operation

DESCRIPTION	ACTION BUTTONS	DETAILS
Reset into IC 224 for JPM G		
Put STA group on MCB CRT and acknowledge computer alarms		
Run/ Freeze Simulator		
Acknowledge annunciators		
Turn Horns ON		
Provide ESP-1.2 Attachment 1 complete through step 1.10		
When directed: PLACE the TTOS switch to OFF And RESET the B1F ESF sequencer	Remote / R43 / loa-dsq007 / off Remote/ R43 /LOA-DSQ001/ TRUE	ROVER reports the CR: **"The B1F sequencer is reset."**
IC SETUP		
RST 146		
IMF Mal-Aux1C 20		
RUN Simulator		
Allow instr air line break in containmtent at 20% to depressurize header until HV-3611/3885/3825 all close automatically.		
DMF MAL-AUX1C		
FREEZE Simulator		
SNAP IC 224		

CONDITIONS

When I tell you to begin, you are to RESTORE INSTRUMENT AIR TO CONTAINMENT. The conditions under which this task is to be performed are:

a. A Loss of Off-site Power and a Small Break LOCA have occurred on Unit 1.
b. 4160V busses 1D and 1E are de-energized.
c. You are directed by the Unit 1 Shift Supervisor to restore instrument air to containment using ESP-1.2, Attachment 1 starting at Step 1.11.
d. A pre-job brief is not required.

INITIATING **CUE**, "You may begin."

EVALUATION CHECKLIST

ELEMENTS:	**STANDARDS:**	**RESULTS: (CIRCLE)**
_____ START TIME		
NOTE: The CAUTION before step 1.11 states the air compressor will consume 0.16 MW and the examinee should check the load on the 1-2A DG prior to taking the actions to start any air compressor. In this scenario, as soon as DH01 is closed the 1A air compressor will start.		
1. (step 1.11.1) Verify the 1C air compressor handswitch in AUTO after START/RUN.	**CHECKS** 1C air compressor green indicating light is LIT. **ATTEMPTS to start** 1C air compressor; handswitch positioned in RUN/START then back to AUTO.	S / U
2. (step 1.11.2) Verify 1C air compressor started.	The 1C air compressor will not start and the green light will remain LIT.	S / U
RNO column		
3. (step 1.11 a) Verify 1C air compressor handswitch in OFF.	**POSITIONS** the 1C air compressor handswitch in OFF position	S / U
4. (step 1.11 b) Verify SI is reset.	**CHECKS** MLB1 1-1 and 11-1 not LIT.	S / U

EVALUATION CHECKLIST

ELEMENTS:	STANDARDS:	RESULTS: (CIRCLE)
* 5. (step 1.11 c. 1 through 3 and d) Direct resetting B1F sequencer.	**Call** ROVER to reset the sequencer per step 1.11 c. and d.	S / U
Simulator operator press the buttons to the right to accomplish step 1.11 c. and d.	Remote / R43 / loa-dsq007 / off	
Report to the CR that the B1F sequencer is reset.	Remote/ R43 /LOA-DSQ001/ TRUE	
* 6. (step 1.11 f) Place Breaker DF-13 Sync Switch in manual.	**POSITIONS DF-13 SYNC SWITCH in the MANUAL** POSITION. (The red light under the A Train synch scopes will illuminate)	S / U
* 7. (step 1.11 g) Close Breaker DF-13	*CLOSES **Breaker DF13.** Checks the red light is LIT. 1H 4160 bus AC potential lights are illuminated.	S / U
8. (step 1.11 h) Place SYNCH SWITCH to OFF.	**places DF-13 SYNC SWITCH in the OFF position.**	S / U

NOTE: Element 9 contains two actions and ONLY Closing DH01 is Critical

* 9. (step 1.11 i) **Close breaker DH01** and Verify breaker EG02-1 closed.	***CLOSES DH01** and observes the red light LIT and **CHECKS** Breaker EG02-1 Observes red light is LIT.	S / U
10. (step 1.11 j) Verify start of 1A air compressor.	CHECKS 1A air compressor AUTO starts and the red light is LIT.	S / U

EVALUATION CHECKLIST

	ELEMENTS:	STANDARDS:	RESULTS: (CIRCLE)
	11. (step 1.12) Check IA pressure > 85 psig	CHECKS INST AIR PI-4004B indication checked to verify IA pressure is rising.	S / U
	TAKES <2 mins to recover >85 psig		
	12. (step 1.13) Check instrument air to containment. • MLB-3 1-2 NOT lit • Annunciator KD1 clear.	CHECKS MLB-3 1-2 and it is LIT and KD1 is in alarm.	S / U
	RNO column		
*	13. (step 1.13 RNO) Open IA to PENE RM valve HV-3825.	OPENS HV-3825. Handswitch must be held until the red light is LIT.	S / U
*	14. (step 1.13 RNO) Open IA to PENE RM valve HV-3885.	OPENS HV-3885 Handswitch must be held until the red light is LIT.	S / U
*	15. (step 1.13 RNO) Open IA supply to CTMT HV-3611.	OPENS HV-3611. Handswitch must be held until the red light is LIT.	S / U
	16. Inform Shift Supervisor that instrument air is aligned to containment	Shift Supervisor acknowledges.	S / U

____ STOP TIME

Terminate when SS informed.

CRITICAL ELEMENTS: Critical Elements are denoted with an asterisk (*) before the element number.

GENERAL REFERENCES:

1. FNP-1-ESP-1.2, Version 24.0
2. K/A: 065AA1.03 RO-2.9 SRO-3.1

GENERAL TOOLS AND EQUIPMENT:

None

Critical ELEMENT justification:

ELEMENT	Evaluation
1-3	**NOT Critical:** The 1C Air Compressor will not start and placing the Handswitch to OFF is not critical since it has no effect on the final outcome.
4	**NOT Critical:** the SI is reset from previous steps in the procedure so this will not be done.
5	**Critical:** Task completion: if the B1F sequencer is not reset then the breaker will not close on the EPB.
6-7	**Critical:** Task completion: these steps have to be accomplished correctly to close DF-13 to supply power to the air compressor.
8	**NOT Critical:** returning the sync switch back to the OFF position has no impact on the successful completion of the task.
9	**Critical:** DH01 must be closed to restore power to the 1A Air compressor. However, EG02-1 remains closed on the load shed and no action is required.
10-11	**NOT Critical:** The 1A air compressor will automatically start and IA pressure will rise to > 85 psig.
12	**NOT Critical:** The MLB light is not LIT and the annunciator is in alarm, but if the student did not accomplish these tasks correctly and still opened the BOP valves the task would be completed sat.
13-15	**Critical:** Task completion: These three valves are required to be opened to accomplish the given task.
16	**NOT Critical:** to call CR is not critical.

COMMENTS:

CONDITIONS

When I tell you to begin, you are to RESTORE INSTRUMENT AIR TO CONTAINMENT. The conditions under which this task is to be performed are:

a. A Loss of Off-site Power and a Small Break LOCA have occurred on Unit 1.
b. 4160V busses 1D and 1E are de-energized.
c. You are directed by the Unit 1 Shift Supervisor to restore instrument air to containment using ESP-1.2, Attachment 1 starting at Step 1.11.
d. A pre-job brief is not required.

Step	Action/Expected Response	Response NOT Obtained

ATTACHMENT 1

****

CAUTION: To ensure adequate supply voltage to all class 1E loads and to meet short circuit analysis constraints, only one air compressor, 1C (preferred) or 1A, should be powered from the diesel generator. One air compressor will consume 0.16 MW of diesel generator load.

****

1.11	Verify 1C air compressor in service.	1.11 Align 1A air compressor for service as follows.
1.11.1	Verify 1C air compressor handswitch in AUTO after START/RUN.	a) Verify 1C air compressor handswitch in OFF.
1.11.2	Verify 1C air compressor started.	b) Verify SI - RESET. [] MLB-1 1-1 not lit [] MLB-1 11-1 not lit
		c) IF LOSP has occurred, THEN place B1F Sequencer Test Trip Override Switch (TTOS)in OFF: 1) Obtain B1F Sequencer TTOS key from SSS office. 2) Insert key into B1F Sequencer Test Trip Override Switch. 3) Place B1F Sequencer Test Trip Override Switch in OFF

Step 1 continued on next page.

Step	Action/Expected Response	Response NOT Obtained

ATTACHMENT 1

****

CAUTION: IF offsite power is lost after sequencer is reset, THEN manual actions may be required to restart safeguards equipment.

****

d) Reset B1F sequencer by depressing the ESS STOP RESET pushbutton on the sequencer panel. (139 ft, AUX BLDG A train SWGR room)

e) WHEN directed by FNP-0-SOP-38.0-1-2A, THEN verify the B1F Sequencer Test Trip Override Switch is in the ON position with the key removed.

f) Place BKR DF13 SYNCH SWITCH in MAN.

g) Close BKR DF13 (1F 4160 V bus tie to 1H 4160 V bus).

h) Place BKR DF13 SYNCH SWITCH in OFF.

i) IF 1H 4160 V bus energized, THEN energize 1G 600 V LC from normal supply.

[] BKR DH01 closed
[] BKR EG02-1 closed

j) Start 1A AIR COMPRESSOR.

Step 1 continued on next page.

Step	Action/Expected Response	Response NOT Obtained

ATTACHMENT 1

1.12 Check INST AIR PRESS PI 4004B - GREATER THAN 85 psig.

1.12 Perform the following.

NOTE: The intent of this step is to regain control of critical air operated components including PORVs and atmospherics. Based on plant conditions and availability of manpower, the applicability, priority and performance of the following actions is at the discretion of the Shift Supervisor.

1.12.1 Restore air pressure.

- Verify proper air compressor operation using FNP-1-SOP-31.0, COMPRESSED AIR SYSTEM.

OR

- IF 2C air compressor available, THEN align 2C air compressor to Unit 1 using FNP-1-SOP-31.0, COMPRESSED AIR SYSTEM.

1.12.2 IF instrument air NOT restored, THEN align nitrogen supply to PORVs using FNP-1-SOP-62.1, BACK-UP AIR OR NITROGEN SUPPLY TO THE PRESSURIZER POWER OPERATED RELIEF VALVES.

1.12.3 IF instrument air NOT restored, THEN align emergency air supply to atmospheric relief valves and/or TDAFWP using FNP-1-SOP-62.0, EMERGENCY AIR SYSTEM.

Step 1 continued on next page.

Step	Action/Expected Response	Response NOT Obtained

ATTACHMENT 1

		1.12.4 IF instrument air NOT restored because 1G 600 V LC is deenergized, THEN energize 1G 600 V LC from 1F 600 V LC using FNP-1-SOP-36.3, 600, 480 AND 208/120 VOLT AC ELECTRICAL DISTRIBUTION SYSTEM.
		1.12.5 WHEN instrument air pressure restored, THEN perform step 1.13.
		1.12.6 Proceed to PROCEDURE STEPS, step 7.
1.13	Check instrument air to containment. IA TO CTMT [] MLB-3 1-2 NOT lit IA TO PENE RM PRESS LO [] Annunciator KD1 clear	1.13 Align instrument air to containment. (BOP) IA TO PENE RM [] N1P19HV3825 open [] N1P19HV3885 open IA TO CTMT [] Q1P19HV3611 open

-END-

SIMULATOR JPM H.

CRO-395D
TITLE: Display Individual CETC Values
EVALUATION LOCATION: ☒ **SIMULATOR** ☐ CONTROL ROOM ☐ CLASSROOM
PROJECTED TIME: 7 MIN SIMULATOR IC NUMBER: IC-225
☐ ALTERNATE PATH ☐ TIME CRITICAL ☐ PRA

JPM DIRECTIONS:

1. Examinee may be given an opportunity to **preview** the task prior to entering the Simulator to lower the required time to conduct the task.
2. The actions of this task are intended to be performed on an Active Simulator in which the examinee may diagnose the correctness of system response to his/her actions and respond to any abnormal conditions which may arise.
3. The provided CUEs may be used to validate correct performance of each ELEMENT.

STANDARD:

- Report the value of the specified CETC as indicated by SOP-68.0.

Examinee:
Overall JPM Performance: Satisfactory ☐ **Unsatisfactory** ☐
Evaluator Comments (attach additional sheets if necessary)

EXAMINER: _____

Developer	Howard Fitzwater	Date: 2/7/11
NRC Approval	SEE NUREG 1021 FORM ES-301-3	

DESCRIPTION	ACTION BUTTONS	DETAILS
Reset into IC 225 for JPM H		
Put OPS group on MCB CRT and acknowledge computer alarms		
Run/ Freeze Simulator		
Acknowledge annunciators		
Turn Horns ON		
IC SETUP		
RST 181		
SNAP IC 225		

CONDITIONS

When I tell you to begin, you are to **OBTAIN THE VALUE OF THERMOCOUPLE J12.** The conditions under which this task is to be performed are:

a. You have been directed to obtain the value of thermocouple J12 per FNP-1-SOP-68.0.

INITIATING **CUE**, "You may begin."

NOTE TO EXAMINER: J12 ADDRESS IS IN TABLE 7, AND J12 IS IN CHANNEL 'A'; a common error is that B train is manipulated during this task.

EVALUATION CHECKLIST

ELEMENTS:	STANDARDS:	RESULTS: (CIRCLE)
____ START TIME		
1. (step 4.6.2.1) Determine the two digit address for thermocouple J12	Table 7 used to identify **CE 14 as address point and is an A train CETC.**	S / U
* 2. (step 4.6.1) **Place A** train in CET AS found: TMAX mode 1st button push: CET Mode 2nd button push: return to TMAX mode May be repeated until desired mode achieved.	TMAX/CET pushbutton depressed. **CUE: "CET" lit on TMAX/CET pushbutton;** **"submode" flashing** on *SUBMODE* (1st / 2nd) pushbutton.	S / U
* 3. (step 4.6.2.2) Select display to CE AS found: HI 1st button push: CE 2nd button push: ALL 3rd button push: return to HI mode May be repeated until desired mode achieved	*SUBMODE* (1st / 2nd) pushbutton depressed until "CE" displayed. **CUE: Submode flashing** on *SUBMODE* (1st / 2nd) pushbutton; **monitor displays CE.**	S / U

EVALUATION CHECKLIST

ELEMENTS:	STANDARDS:	RESULTS: (CIRCLE)
* 4. (step 4.6.2.3 and 4.6.2.4) Select display to CE00 AS found: HI . 1st button push: CE . 2nd button push: ALL. 3rd button push: return to HI . mode May be repeated until desired mode achieved	$\frac{SUBMODE\ ACK}{ALARM\ ACK}$ pushbutton depressed until submode portion of the $\frac{SUBMODE}{1st\ /\ 2nd}$ pushbutton is illuminated and not flashing, "1st" portion of the $\frac{SUBMODE}{1st\ /\ 2nd}$ pushbutton is flashing. **CUE: "Submode" lit and "1st" flashing on** $\frac{SUBMODE}{1st\ /\ 2nd}$ pushbutton; monitor displays **CE 00 with first "0" flashing.**	S / U
* 5. (step 4.4.2.5) Align display to read CE 10	Depress $\frac{SUBMODE}{1st\ /\ 2nd}$ pushbutton until 1 appears in the "tens" digit. **CUE: "Submode" lit and "1st" flashing on** $\frac{SUBMODE}{1st\ /\ 2nd}$ pushbutton; monitor displays **CE 10 with the "1" flashing.**	S / U
* 6. (step 4.6.2.6) Align to select ones digit	Depress $\frac{SUBMODE\ ACK}{ALARM\ ACK}$ pushbutton. **CUE: "Submode" and "1st" are lit, "2nd" is flashing on** $\frac{SUBMODE}{1st\ /\ 2nd}$ pushbutton; monitor **displays CE 10 with the "0" flashing.**	S / U

EVALUATION CHECKLIST

ELEMENTS:	STANDARDS:	RESULTS: (CIRCLE)
* 7. (step 4.6.2.7) Align display to read CE 14	Depress $\frac{SUBMODE}{1st\ /\ 2nd}$ pushbutton until 4 is displayed in the "ones" digit. 1st/2nd pushbutton depressed until CE 14 in monitor window. **CUE: "Submode" and "1st" are lit, "2nd" is flashing** on $\frac{SUBMODE}{1st\ /\ 2nd}$ pushbutton; monitor **displays CE 14 with the 4 flashing.**	S / U
* 8. (step 4.6.2.8) Determine value of J12	$\frac{SUBMODE\ ACK}{ALARM\ ACK}$ pushbutton depressed. **CUE: "Submode", "1st", and "2nd" lit on** $\frac{SUBMODE}{1st\ /\ 2nd}$ pushbutton; "Submode Ack" lit on $\frac{SUBMODE\ ACK}{ALARM\ ACK}$ pushbutton **monitor displays ~ 606 °F or displayed value if actually performed.**	S / U

____ STOP TIME

Terminate when the value for thermocouple J12 is displayed.

CRITICAL ELEMENTS: Critical Elements are denoted with an asterisk (*) before the element number.

GENERAL REFERENCES:

1. FNP-1- SOP-68.0 Revision 8.0
2. K/As: 017A4.01 RO-3.8 SRO-4.1

GENERAL TOOLS AND EQUIPMENT:

None

Critical ELEMENT justification:

STEP	Evaluation
1.	Not critical since finding the correct value in the Table will be revealed at element 7; affect on the final outcome of the task will be captured at a later element (#7).
2.	CRITICAL to accomplish the assigned TASK's objective • This button has to be in the correct alignment to get the correct value for the thermocouple.
3.	CRITICAL to accomplish the assigned TASK's objective • This button has to be in the correct alignment to get the correct value for the thermocouple.
4.	CRITICAL to accomplish the assigned TASK's objective • This button has to be in the correct alignment to get the correct value for the thermocouple.
5.	CRITICAL to accomplish the assigned TASK's objective • This button has to be in the correct alignment to get the correct value for the thermocouple.
6.	CRITICAL to accomplish the assigned TASK's objective • This button has to be in the correct alignment to get the correct value for the thermocouple.
7.	CRITICAL to accomplish the assigned TASK's objective • This button has to be in the correct alignment to get the correct value for the thermocouple.
8.	CRITICAL to accomplish the assigned TASK's objective • This button has to be in the correct alignment to get the correct value for the thermocouple.

COMMENTS:

CONDITIONS

When I tell you to begin, you are to **OBTAIN THE VALUE OF THERMOCOUPLE J12**. The conditions under which this task is to be performed are:

a. You have been directed to obtain the value of thermocouple J12 per FNP-1-SOP-68.0.

4.6.2 To display individual core exit thermocouple values, perform the following:

NOTE: The CET mode of operation has three submodes for display of core exit thermocouple data. An internal timer will automatically return the system to the TMAX mode after three minutes if no operator entries are made. The decimal point at the far right of the display will flash when in any CET submode. The data displayed by each submode is as follows:

- **"_HI_" - allows the operator to display the highest or next highest thermocouple temperature in a quadrant. Refer to Table 6 for display addresses.**
- **"CE__" - allows individual thermocouple temperatures to be displayed. Refer to Table 7 for input addresses corresponding to specific core locations.**
- **"ALL_" - Displays the highest and next highest thermocouple temperature per quadrant and the individual thermocouple temperatures sequentially. In this submode, the monitor will display an identifier from Table 6 or 7 for two seconds followed by the value for five seconds in sequence.**

4.6.2.1 Find the two digit address for the desired parameter from Table 6 or 7 as appropriate.

4.6.2.2 With the CET portion of the TMAX/CET push-button illuminated, depress the $\frac{\text{SUBMODE}}{\text{1st/2nd}}$ push-button until the desired submode as described above is displayed.

4.6.2.3 WHEN the desired submode is displayed, THEN depress the $\frac{\text{SUBMODE ACK}}{\text{ALARM ACK}}$ push-button and verify the SUBMODE portion of the $\frac{\text{SUBMODE}}{\text{1st/2nd}}$ push-button is illuminated and NOT flashing.

NOTE: In the "ALL" submode, the display will start to automatically sequence through all quadrant and core exit temperature values as soon as the SUBMODE ACK / ALARM ACK push-button is depressed. Therefore steps 4.6.2.4 - 4.6.2.9 do not apply to this submode.

4.6.2.4 In the "CE" or "HI" submode, verify the 1st portion of the SUBMODE 1st/2nd push-button is flashing.

4.6.2.5 Depress the SUBMODE 1st/2nd push-button until the "tens" digit corresponds to the desired address.

4.6.2.6 Depress the SUBMODE ACK / ALARM ACK push-button and verify the 1st portion of the SUBMODE 1st/2nd push-button is illuminated and NOT flashing and that the 2nd portion starts flashing.

4.6.2.7 Depress the SUBMODE 1st/2nd push-button until the "ones" digit corresponds to the desired address.

4.6.2.8 Depress the SUBMODE ACK / ALARM ACK push-button and verify that the 2nd portion of the SUBMODE 1st/2nd push-button is illuminated and NOT flashing. The current value of the desired parameter is now displayed.

4.6.2.9 To select another parameter address depress the SUBMODE 1st/2nd push-button and repeat steps 4.6.2.4 - 4.6.2.8.

4.6.2.10 To exit the CET mode, depress the TMAX/CET push-button until the TMAX portion is illuminated.

IN-PLANT JPM I.

SO-590

TITLE: Place the SJAE Filtration Unit In Service

EVALUATION LOCATION: ☐ SIMULATOR ☐ CONTROL ROOM ☒ PLANT

PROJECTED TIME: 5 MIN. SIMULATOR IC NUMBER: N/A

☐ ALTERNATE PATH ☐ TIME CRITICAL ☐ PRA

JPM DIRECTIONS:

1. This JPM may be performed on UNIT 1 or 2.
2. There one JPM enclosed that can be used for either unit.

TASK STANDARD: Required for successful completion of this JPM:

- To place the LCS in the FILTER position and close the manual bypass valve.

Examinee:		
Overall JPM Performance:	**Satisfactory** ☐	**Unsatisfactory** ☐
Evaluator Comments (attach additional sheets if necessary)		

EXAMINER: _____

Developer	Howard Fitzwater	Date: 2/7/11
NRC Approval	SEE NUREG 1021 FORM ES-301-3	

CONDITIONS

When I tell you to begin, you are to PLACE THE SJAE FILTRATION UNIT IN SERVICE on UNIT 1(2). The conditions under which this task is to be performed are:

a. The Plant is in Mode 1.
b. A small tube leak exists in 'A' steam generator and AOP-2.0 has been entered.
c. You are directed by the control room to place the SJAE filtration unit in service using SOP-28.5.
d. The SJAE discharge line drain trap has been routed to a poly-bottle with a filtered vent.
e. A pre-job brief is not required.

INITIATING **CUE**, "You may begin."

NOTE: THIS JPM MAY BE PERFORMED ON EITHER UNIT. USE THE [BRACKETED] INFORMATION FOR UNIT TWO [2].

EVALUATION CHECKLIST

	ELEMENTS:	STANDARDS:	RESULTS: (CIRCLE)
	_____ START TIME		
*1.	(step 4.3.1) Place local control handswitch for the SJAE filtration unit suction valves in FILTER.	Local control handswitch placed in FILTER. **CUE:** Handswitch is in FILTER.	S / U
2.	Verify open SJAE FILTER SUCT DMPR N1[2]U41HV3677B	Valve N1[2]U41HV3677B is open. **CUE:** Valve is open.	S / U
3.	Verify closed SJAE FILTER BYP DMPR N1[2]U41HV3677A	Valve N1[2]U41HV3677A is closed. **CUE:** Valve is closed.	S / U
*4.	Close SJAE FILTER BYP DMPR manual isolation N1[2]U41V018	Valve N1[2]U41V018 is taken to the closed position. **CUE:** Valve is closed.	S / U
5.	Inform control room that SJAE filtration unit has been placed in service	Control room informed. **CUE:** Control room acknowledges that the SJAE filtration unit is in service.	S / U

EVALUATION CHECKLIST

ELEMENTS: **STANDARDS:** **RESULTS: (CIRCLE)**

____ STOP TIME

Terminate after the control room is notified that the SJAE filtration unit is in service.

CRITICAL ELEMENTS: Critical Elements are denoted with an asterisk (*) preceding the element number.

GENERAL REFERENCES:

1. FNP-1-SOP-28.5, Version 32.0
2. FNP-2-SOP-28.5, Version 27.0
3. K/As: 037AA1.02 RO-3.1 SRO-2.9

GENERAL TOOLS AND EQUIPMENT:

None

Critical ELEMENT justification:

STEP	Evaluation
1	**Critical:** Task completion: required to be placed in the FILTER position to align AOVs properly to allow flow through the filter.
2	**NOT Critical:** Verifying components which are already in the required position.
3	**NOT Critical:** Verifying components which are already in the required position.
4	**Critical:** Task completion: required to close valve to cause the steam and air flow to go through the filter and NOT bypass it.
5	**NOT Critical:**to call CR is not critical.

COMMENTS:

CONDITIONS

When I tell you to begin, you are to PLACE THE SJAE FILTRATION UNIT IN SERVICE on UNIT 1(2). The conditions under which this task is to be performed are:

a. The Plant is in Mode 1.
b. A small tube leak exists in 'A' steam generator and AOP-2.0 has been entered.
c. You are directed by the control room to place the SJAE filtration unit in service using SOP-28.5.
d. The SJAE discharge line drain trap has been routed to a poly-bottle with a filtered vent.
e. A pre-job brief is not required.

4.3 Air Ejector Filter Operation

NOTE: The SJAE discharge line drain trap drains to the Turbine Building Sump. IF the filtration unit is being placed in service due to a tube leak, THEN consideration should be given to EITHER isolating the drain trap OR routing the drainage to a poly bottle with a filtered vent.

4.3.1 To place SJAE filter in operation, at LCS SJAE FILTRATION, N1U41G529-N place local control handswitch for SJAE filtration unit valves in FILTER and perform the following:

4.3.1.1 Verify open SJAE FILTER SUCT DMPR, N1U41HV3677B.

4.3.1.2 Verify closed SJAE FILTER BYP DMPR, N1U41HV3677A.

4.3.1.3 Close SJAE FILTER BYP MAN ISO, N1U41V018.

4.3.2 To bypass SJAE filter, perform the following:

4.3.2.1 Verify open SJAE FILTER BYP MAN ISO, N1U41V018.

4.3.2.2 At LCS SJAE FILTRATION, N1U41G529-N place local control handswitch for SJAE filtration unit valves in BYPASS.

4.3.2.3 Verify closed SJAE FILTER SUCT DMPR, N1U41HV3677B.

4.3.2.4 Verify open SJAE FILTER BYP DMPR, N1U41HV3677A.

4.3 Air Ejector Filter Operation.

NOTE: The SJAE discharge line drain trap drains to the Turbine Building Sump. IF the filtration unit is being placed in service due to a tube leak, THEN consideration should be given to EITHER isolating the drain trap OR routing the drainage to a poly bottle with a filtered vent.

4.3.1 To place SJAE filter in operation, at LCS for SJAE FILTRATION N2U41G529-N, place local control handswitch for SJAE filtration unit valves in FILTER and perform the following:

4.3.1.1 Verify open SJAE FILTER SUCT DMPR, N2U41HV3677B.

4.3.1.2 Verify closed SJAE FILTER BYP DMPR, N2U41HV3677A.

4.3.1.3 Close SJAE FILTER BYP MAN ISO, N2U41V018.

4.3.2 To bypass SJAE filter, perform the following:

4.3.2.1 Verify open SJAE FILTER BYP MAN ISO, N2U41V018.

4.3.2.2 At LCS SJAE FILTRATION N2U41G529-N, place local control handswitch for SJAE filtration unit valves in BYPASS.

4.3.2.3 Verify open SJAE FILTER BYP DMPR, N2U41HV3677A.

4.3.2.4 Verify closed SJAE FILTER SUCT DMPR, N2U41HV3677B.

IN-PLANT JPM J.

SO-449

TITLE: Supply Emergency Air To Steam Generator Atmospheric Relief Valves From Emergency Air Compressors

EVALUATION LOCATION: ☐ SIMULATOR ☐ CONTROL ROOM ☒ PLANT

PROJECTED TIME: 10 MIN SIMULATOR IC NUMBER: N/A

☐ ALTERNATE PATH ☐ TIME CRITICAL ☐ PRA

JPM DIRECTIONS:

1. This JPM may be performed on UNIT 1 or 2.
2. There are two separate JPMs enclosed, **ENSURE** the correct unit JPM is used.

TASK STANDARD: Required for successful completion of this JPM:

- Complete steps to align emergency air to the ARVs.
- Then reduce the pressure on the ARVs per the CUE to reduce the air pressure to the ARV which will close the ARV and reduce the cooldown rate.

Examinee:		
Overall JPM Performance:	**Satisfactory** ☐	**Unsatisfactory** ☐
Evaluator Comments (attach additional sheets if necessary)		

EXAMINER: _____

CONDITIONS

When I tell you to begin, you are to **SUPPLY EMERGENCY AIR TO THE 1B STEAM GENERATOR ATMOSPHERIC RELIEF VALVE FROM EMERGENCY AIR COMPRESSORS AND OPEN THE 1B ARV 25%**. The conditions under which this task is to be performed are:

a. The Plant has lost Instrument Air.
b. **NO POWER** is available to MCB atmospheric relief valve controllers.
c. You are directed by Shift Supervisor to perform SOP-62.0, Section 4.1, to align emergency air to 1B steam generator atmospheric relief valve and open the 1B ARV 25%.
d. DC power **is NOT** available to the solenoid valves.
e. A pre-job brief is **NOT** required.

INITIATING **CUE**, "You may begin."

EVALUATION CHECKLIST

ELEMENTS:	STANDARDS:	RESULTS: (CIRCLE)
____ START TIME		
*1. (step 4.1.1 or step 4.4.1) Start "A" emergency air compressor. Start 'B' emergency air compressor.	Handswitches turned to ON. **CUE:** BOTH Compressors start.	S / U
2. (step 4.4.2.1) Verify closed emergency air header isolation valve N1P18V073B to 1B ARV. (step 4.4.2.2 does not apply to this condition)	Verify closed valve V073B by turning clockwise to verify closed. **CUE:** V073B is closed.	S / U
3. (step 4.4.2.3) Place the local handswitch Q1N11HS3371BB to CLOSE	Local handswitch HS3371BB is taken to close. **CUE:** HS3371BB is in the closed position **The Light Will Be Dark Due To No DC Power**	S / U
*4 (step 4.4.2.3) OPEN the solenoid valve for 1B ARV with its manual actuator. (Q1N11SV3371BB)	Solenoid valve SV3371BB manual actuator is opened. **CUE:** SV3371BB is open.	S / U

EVALUATION CHECKLIST

ELEMENTS:	STANDARDS:	RESULTS: (CIRCLE)
Atmospheric relief valves will start to open at 24 ± 2 psig and will be full open at 45 psig. CUE TO BE GIVEN BY EXAMINER WHEN ASKED: "PI2872BB READS 44 PSIG" WHEN THE FOLLOWING STEP IS DONE.		
*5. (step 4.4.2.4) Slowly throttle open emergency air header iso valve N1P18V073B while observing air supply pressure ON **PI2872BB** for the 1B ARV.	• Open valves N1P18V073B • by turning counterclockwise until partially open. • **CUE:** V073B IS throttled open.	S / U
*6. (step 4.4.2.5) Open vent valve N1P18V098B to reduce pressure for 1B ARV.	Open vent valveV098B. **CUE:** PI2872BB reads 30 psig.	S / U
7. Report to control room operator that 1B atmospheric relief valve is open and being supplied from the emergency air compressors.	Control room operator notified. **CUE:** CRO acknowledges.	S / U

____ STOP TIME

Terminate after control room operator is notified that 1B ARV is OPEN and being supplied from the emergency air compressors.

*** CRITICAL ELEMENTS:** Critical Elements are denoted with an Asterisk (*) preceding the element number.

GENERAL REFERENCES:

1. FNP-1-SOP-62.0, Rev/Version 22.0
2. KAs: 065AA1.04 RO-3.5 SRO-3.4

GENERAL TOOLS AND EQUIPMENT:

None

Critical ELEMENT justification:

STEP	Evaluation
1	**Critical:** Task completion: required to start the EACs or there will be no pressure to open the ARV.
2	**NOT Critical:** Verifying components which are already in the required position.
3	**NOT Critical:** Placing the HS to close will not impact the successful completion of the task.
4	**Critical:** Task completion: required to open valve to allow air to the ARV to open the valve.
5	**Critical:** Task completion: required to throttle open to place air on the ARV to open the valve.
6	**Critical:** Task completion: required to reduce air pressure on the ARV to close the ARV to reduce the cooldown on the RCS on the ARV to open the valve.
7	**NOT Critical:**to call CR is not critical.

COMMENTS:

CONDITIONS

When I tell you to begin, you are to **SUPPLY EMERGENCY AIR TO THE 1B STEAM GENERATOR ATMOSPHERIC RELIEF VALVE FROM EMERGENCY AIR COMPRESSORS AND OPEN THE 1B ARV 25%**. The conditions under which this task is to be performed are:

a. The Plant has lost Instrument Air.
b. **NO POWER** is available to MCB atmospheric relief valve controllers.
c. You are directed by Shift Supervisor to perform SOP-62.0, Section 4.1, to align emergency air to 1B steam generator atmospheric relief valve and open the 1B ARV 25%.
d. DC power **is NOT** available to the solenoid valves.
e. A pre-job brief is **NOT** required.

CONDITIONS

When I tell you to begin, you are to **SUPPLY EMERGENCY AIR TO THE 2B STEAM GENERATOR ATMOSPHERIC RELIEF VALVE FROM EMERGENCY AIR COMPRESSORS AND OPEN THE 2B ARV 25%**. The conditions under which this task is to be performed are:

a. The Plant has lost Instrument Air.
b. **NO POWER** is available to MCB atmospheric relief valve controllers.
c. You are directed by Shift Supervisor to perform SOP-62.0, Section 4.1, to align emergency air to 2B steam generator atmospheric relief valve and open the 2B ARV 25%.
d. DC power **is NOT** available to the solenoid valves.
e. A pre-job brief is **NOT** required.

EVALUATION CHECKLIST

	ELEMENTS:	STANDARDS:	RESULTS: (CIRCLE)
	____ START TIME		
*1.	(step 4.1.1 or step 4.4.1) Start "A" emergency air compressor. Start 'B' emergency air compressor.	Handswitches turned to ON. (CUE: BOTH Compressors start.)	S / U
2.	(step 4.4.2.1) Verify closed emergency air header isolation valve N2P18V073B to 2B ARV.	Verify closed valve V073B by turning clockwise to verify closed. (CUE: V073B is closed.)	S / U
3.	(step 4.4.2.2) Place the local handswitch Q2N11HS3371BB to CLOSE	Local handswitch HS3371BB is taken to close. (CUE: HS3371BB is in the closed position) **The Light Will Be Dark Due To No DC Power**	S / U
*4	(step 4.4.2.2) Close the manual isolation valve Q2N11V921B for solenoid valve (Q2N11SV3371BB)	Manual isolation valve v921B for SV3371BB is taken closed. (CUE: manual valve is closed.)	S / U
*5.	(step 4.4.2.2) Open the manual bypass valve Q2N11V914BB for solenoid valve (Q2N11SV3371BB)	Manual bypass valve V914BB for SV3371BB is taken open. (CUE: manual valve is open.)	S / U

EVALUATION CHECKLIST

ELEMENTS:	STANDARDS:	RESULTS: (CIRCLE)

Atmospheric relief valves will start to open at 24 ± 2 psig and will be full open at 45 psig.

CUE TO BE GIVEN BY EXAMINER WHEN ASKED: "PI2872BB READS 44 PSIG" WHEN THE FOLLOWING STEP IS DONE.

*6.	(step 4.4.2.3) Slowly throttle open emergency air header iso valve N2P18V073B while observing air supply pressure ON **PI2872BB** for the 2B ARV.	Open valves V073B by turning counterclockwise until partially open. (CUE: V073B IS throttled open.)	S / U
*6.	(step 4.4.2.4) Open manual isolation valve Q2N11V921B to reduce pressure for 2B ARV.	Open vent valveV921B. (CUE: PI2872BB reads 30 psig.)	S / U
7.	Report to control room operator that 2B atmospheric relief valve is open and being supplied from the emergency air compressors.	Control room operator notified. (CUE: CRO acknowledges.)	S / U

____ STOP TIME

Terminate after control room operator is notified that 2B ARV is OPEN and being supplied from the emergency air compressors.

*** CRITICAL ELEMENTS:** Critical Elements are denoted with an Asterisk (*) preceding the element number.

GENERAL REFERENCES:

1. FNP-2-SOP-62.0, Rev/Version 24.0
2. KAs: 065AA1.04 RO-3.5 SRO-3.4

GENERAL TOOLS AND EQUIPMENT:

None

Critical ELEMENT justification:

STEP	Evaluation
1	**Critical:** Task completion: required to start the EACs or there will be no pressure to open the ARV.
2	**NOT Critical:** Verifying components which are already in the required position.
3	**NOT Critical:** Placing the HS to close will not impact the successful completion of the task.
4	**Critical:** Task completion: required to close the manual valve to prevent venting off the air and allow the ARV to receive the air and open.
5	**Critical:** Task completion: required to open manual bypass to place air on the ARV to open the valve.
6	**Critical:** Task completion: required to reduce air pressure on the ARV to close the ARV to reduce the cooldown on the RCS on the ARV to open the valve.
7	**NOT Critical:**to call CR is not critical.

COMMENTS:

CONDITIONS

When I tell you to begin, you are to **SUPPLY EMERGENCY AIR TO THE 2B STEAM GENERATOR ATMOSPHERIC RELIEF VALVE FROM EMERGENCY AIR COMPRESSORS AND OPEN THE 2B ARV 25%**. The conditions under which this task is to be performed are:

a. The Plant has lost Instrument Air.
b. **NO POWER** is available to MCB atmospheric relief valve controllers.
c. You are directed by Shift Supervisor to perform SOP-62.0, Section 4.1, to align emergency air to 2B steam generator atmospheric relief valve and open the 2B ARV 25%.
d. DC power **is NOT** available to the solenoid valves.
e. A pre-job brief is **NOT** required

4.4 Local Pneumatic Operation of Steam Generator Atmospheric Relief Valves

NOTE: IF this section is entered from step 4.3.6, THEN step 4.4.1 may be satisfied.

4.4.1 Place the emergency air compressors in operation:

- Place emergency air compressor 1A hand switch in ON.
- Place emergency air compressor 1B hand switch in ON.

4.4.2 Opening Atmospheric Relief Valve

4.4.2.1 Verify emergency air header iso valve closed for the affected atmospheric relief valve(s):

Atmospheric Relief Valve	Emergency Air Header Iso Valve
Q1N11PCV3371A	N1P18V073A
Q1N11PCV3371B	N1P18V073B
Q1N11PCV3371C	N1P18V073C

4.4.2.2 IF DC power is available to the solenoid valves THEN place the local hand switch in OPEN for the affected atmospheric relief valve(s):

Atmospheric Relief Valve	Solenoid Valve	Handswitch
Q1N11PCV3371A	Q1N11SV3371AB	Q1N11HS3371AB
Q1N11PCV3371B	Q1N11SV3371BB	Q1N11HS3371BB
Q1N11PCV3371C	Q1N11SV3371CB	Q1N11HS3371CB

4.4.2.3 IF DC power is NOT available:

- THEN place the local hand switch in CLOSE.
- AND OPEN the solenoid valve with its manual actuator for the affected atmospheric relief valve(s):

Atmospheric Relief Valve	Solenoid Valve	Handswitch
Q1N11PCV3371A	Q1N11SV3371AB	Q1N11HS3371AB
Q1N11PCV3371B	Q1N11SV3371BB	Q1N11HS3371BB
Q1N11PCV3371C	Q1N11SV3371CB	Q1N11HS3371CB

CAUTION: Atmospheric relief valves will start to open at 24 ± 2 psig and will be full open at 45 psig. IF the atmospheric relief is full open, THEN Tech Spec cooldown limits may be exceeded.

4.4.2.4 Slowly throttle open emergency air header iso valve while observing air supply pressure for the affected atmospheric relief valve(s):

Atmospheric Relief Valve	Emergency Air Header Iso Valve	Local Pressure Indicator
Q1N11PCV3371A	N1P18V073A	N1P18PI2872AB
Q1N11PCV3371B	N1P18V073B	N1P18PI2872BB
Q1N11PCV3371C	N1P18V073C	N1P18PI2872CB

4.4.2.5 IF necessary to reduce air supply pressure, THEN open manual vent valve downstream of solenoid valve for the affected atmospheric relief valve(s):

Atmospheric Relief Valve	Manual Vent Valve	Solenoid Valve
Q1N11PCV3371A	N1P18V098A	Q1N11SV3371AB
Q1N11PCV3371B	N1P18V098B	Q1N11SV3371BB
Q1N11PCV3371C	N1P18V098C	Q1N11SV3371CB

MAIN AND REHEAT STEAM

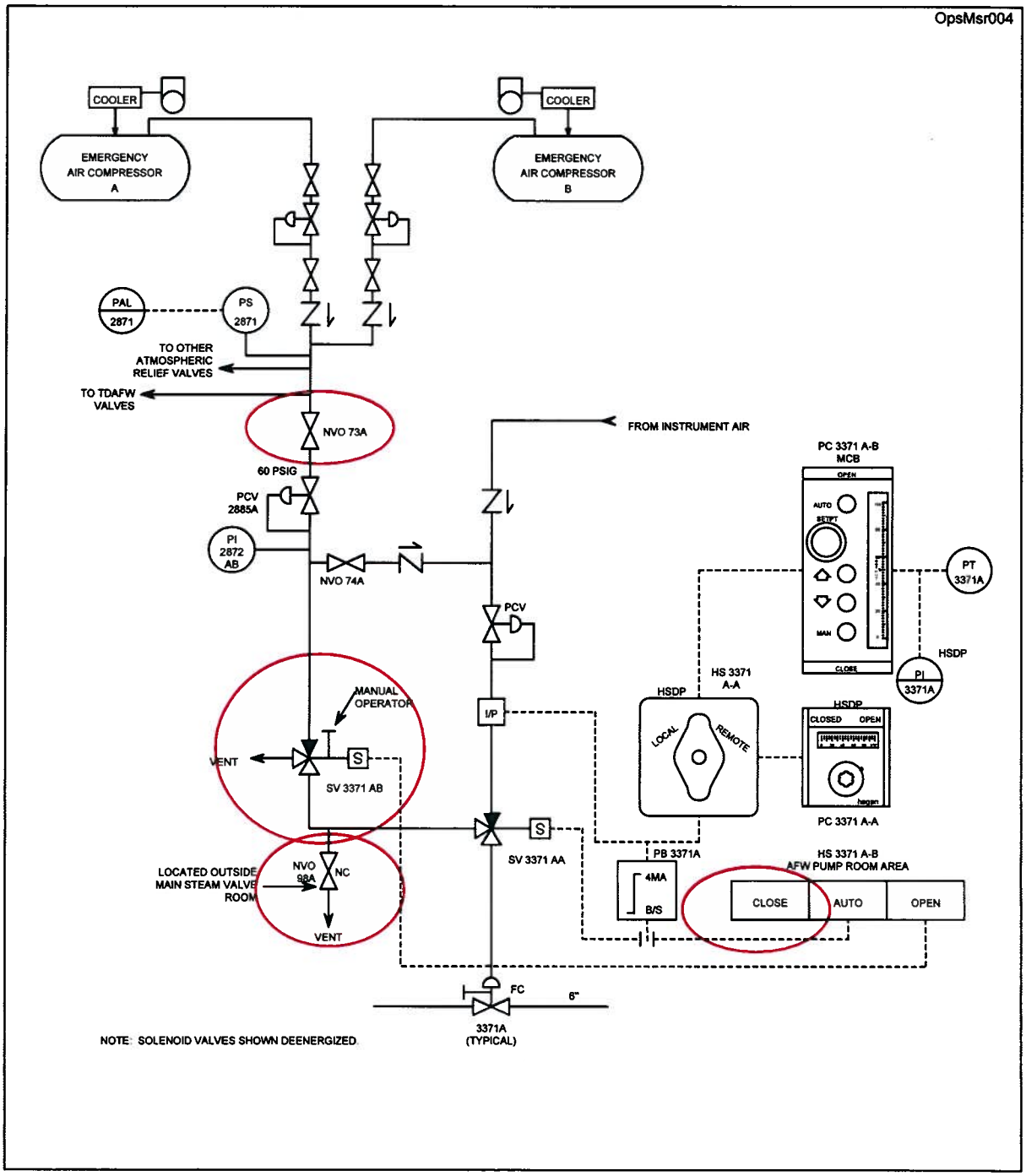

FIGURE 6 - Air Supply to Main Steam Atmospheric Relief Valve (Unit 1)

4.4 Local Pneumatic Operation of Steam Generator Atmospheric Relief Valves

NOTE: IF this section is entered from step 4.3.6, THEN step 4.4.1 may be satisfied.

4.4.1 Place the emergency air compressors in operation:

- Place emergency air compressor 2A hand switch in ON.
- Place emergency air compressor 2B hand switch in ON.

4.4.2 Opening Atmospheric Relief Valve

4.4.2.1 Verify emergency air header iso valve closed for the affected atmospheric relief valve(s):

Atmospheric Relief Valve	Emergency Air Header Iso Valve
Q2N11PCV3371A	N2P18V073A
Q2N11PCV3371B	N2P18V073B
Q2N11PCV3371C	N2P18V073C

4.4.2.2 Perform the following for the affected atmospheric relief valve(s):

A. Place the local handswitch to CLOSE.

B. Close the MANUAL ISOLATION VALVE for SV3371AB (BB, CB).

C. Open the MANUAL BYPASS VALVE for SV3371AB (BB, CB).

Atmospheric Relief Valve	Handswitch	Manual Iso Valve	Manual Bypass Valve	Solenoid Valve
Q2N11PCV3371A	Q2N11HS3371AB	Q2N11V921A	Q2N11V914AB	Q2N11SV3371AB
Q2N11PCV3371B	Q2N11HS3371BB	Q2N11V921B	Q2N11V914BB	Q2N11SV 3371BB
Q2N11PCV3371C	Q2N11HS3371CB	Q2N11V921C	Q2N11V914CB	Q2N11SV 3371CB

CAUTION: Atmospheric relief valves will start to open at 24 ± 2 psig and will be full open at 45 psig. IF the atmospheric relief is full open, THEN Tech Spec cooldown limits may be exceeded.

4.4.2.3 Slowly throttle open emergency air header iso valve while observing air supply pressure for the affected atmospheric relief valve(s):

Atmospheric Relief Valve	Emergency Air Header Iso Valve	Local Pressure Indicator
Q2N11PCV3371A	N2P18V073A	N2P18PI2872AB
Q2N11PCV3371B	N2P18V073B	N2P18PI2872BB
Q2N11PCV3371C	N2P18V073C	N2P18PI2872CB

4.4.2.4 IF necessary to reduce air supply pressure, THEN open the manual isolation valve downstream of the solenoid valve for the affected atmospheric relief valve(s):

Atmospheric Relief Valve	Manual Iso Valve	Local Pressure Indicator
Q2N11PCV3371A	Q2N11V921A	N2P18PI2872AB
Q2N11PCV3371B	Q2N11V921B	N2P18PI2872BB
Q2N11PCV3371C	Q2N11V921C	N2P18PI2872CB

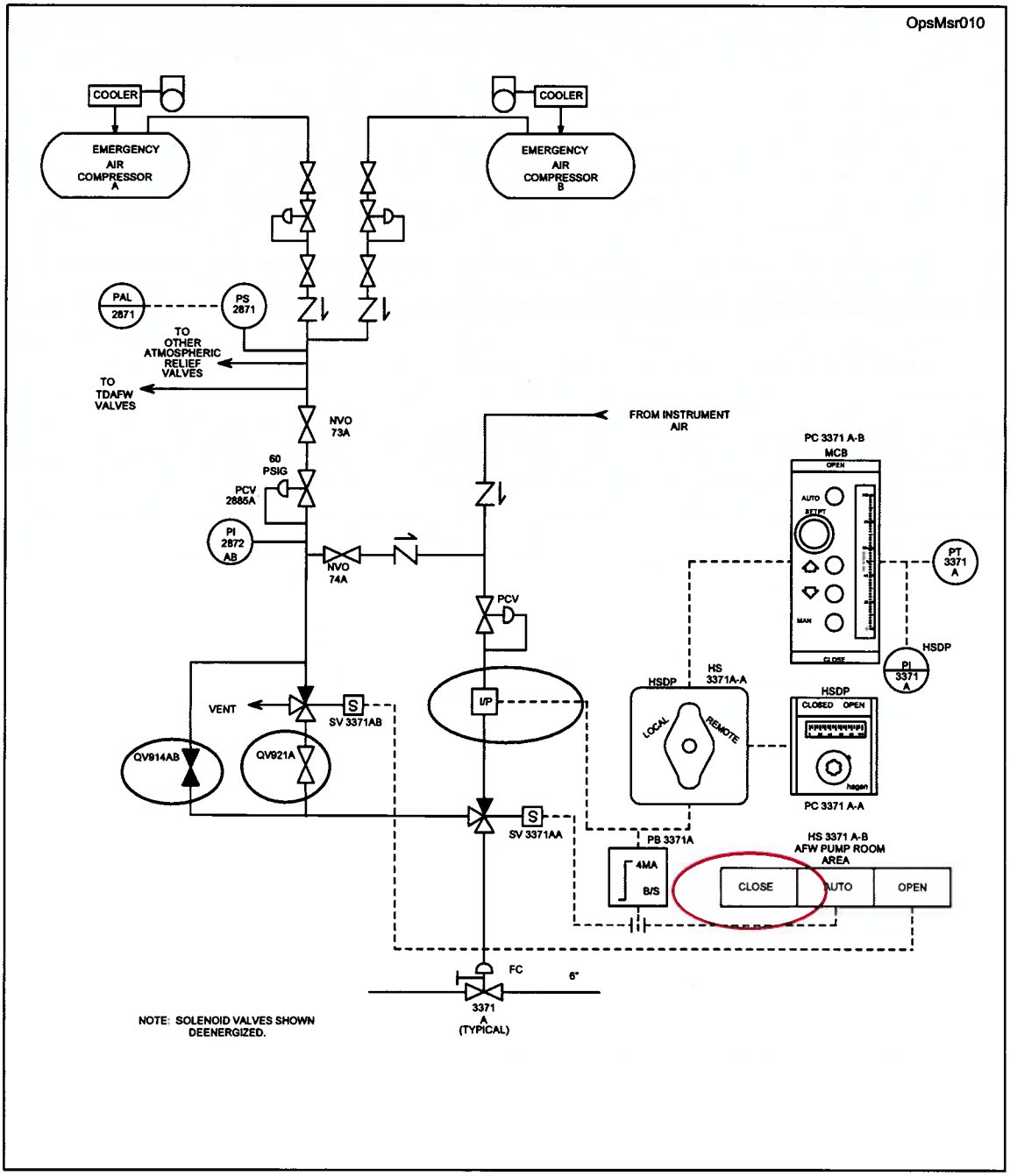

FIGURE 7 - Air Supply to Main Steam Atmospheric Relief Valve (Unit 2)

IN-PLANT JPM K.

SO-095B

TITLE: Align RHT To Drain To WHT

EVALUATION LOCATION: ☐ SIMULATOR ☐ CONTROL ROOM ☒ PLANT

PROJECTED TIME: 10 MIN SIMULATOR IC NUMBER: N/A

☐ ALTERNATE PATH ☐ TIME CRITICAL ☐ PRA

JPM DIRECTIONS:

1. This JPM may be performed on UNIT 1 or 2.
2. There are two separate JPMs enclosed, **ENSURE** the correct unit JPM is used.

TASK STANDARD: Required for successful completion of this JPM:

- Complete the valve line up to drain the RHT to the WHT.

Examinee:		
Overall JPM Performance:	**Satisfactory** ☐	**Unsatisfactory** ☐
Evaluator Comments (attach additional sheets if necessary)		

EXAMINER: _____

CONDITIONS

When I tell you to begin, you are to DRAIN #1 RECYCLE HOLDUP TANK (RHT) TO THE WASTE HOLDUP TANK (WHT) **on Unit 1**. The conditions under which this task is to be performed are:

a. #1 RHT is not on service and all initial conditions have been met for draining it to the WHT (i.e., tank has remained idle for several days for fission gas decay).
b. You are directed by the Unit Operator to drain #1 RHT to the WHT using the preferred method using SOP-2.4.
c. A pre-job brief is **NOT** required.

INITIATING **CUE**, "You may begin."

EVALUATION CHECKLIST

ELEMENTS:		STANDARDS:	RESULTS: (CIRCLE)
____	**START TIME**		
1.	(step 10.1.1) Verify 1A and 1B recycle evaporator feed pumps are in "local" and "pulled to lock"	Verify 1A and 1B REV feed pumps are in "local" and "pulled to lock" verifying or placing in "local" and "pull to lock". **CUE:** 1A and 1B REV feed pumps are in "local" and "pulled to lock".	S / U
*2.	(step 10.1.2) Close 1A recycle evaporator feed pump discharge Q1E21V295A(8567B) and 1B recycle evaporator feed pump discharge Q1E21V295B(8567A)	Close 1A REV feed pump disch V295A(8567B) and 1B REV feed pump disch V295B(8567A) by turning the handwheels clockwise. **CUE:** V295A(8567B) and V295B(8567A) are closed.	S / U
3.	(step 10.1.3) Verify closed RHT outlet isolation: #1 RHT Q1E21V286A #2 RHT Q1E21V286B #3 RHT Q1E21V286C	Close or verify closed RHT outlet isolation valves #1 RHT V286A, #2 RHT V286B, and #3 RHT V286C. **CUE:** RHT outlet isolation valves #1 RHT V286A, #2 RHT V286B, and #3 RHT V286C are closed.	S / U

EVALUATION CHECKLIST

ELEMENTS:	STANDARDS:	RESULTS: (CIRCLE)
*4. (step 10.1.4) Open recycle evaporator feed pump casing drain valves Q1E21V577A and Q1E21V577B	Open REV feed pump casing drain valves V577A and V577B by turning handwheels counterclockwise. **CUE:** REV feed pump casing drain valves V577A and V577B indicate open.	S / U
*5. (step 10.1.5) Throttle open the #1 RHT outlet isolation to establish the desired drain rate #1 RHT Q1E21V286A	Throttle open #1 RHT outlet isolation V286A to establish the desired drain rate. **CUE:** V286A for RHT #1 throttled open and desired drain rate established.	S / U

____ STOP TIME

Terminate when all elements of the task have been completed.

*** CRITICAL ELEMENTS:** Critical Elements are denoted with an Asterisk (*) preceding the element number.

GENERAL REFERENCES:

1. FNP-1-SOP-2.4, Version 58.0
2. K/As: 068K1.07 RO-2.7 SRO-2.9

GENERAL TOOLS AND EQUIPMENT:

None

Critical ELEMENT justification:

STEP	Evaluation
1	**NOT Critical:** Verifying components which are already in the required position.
2	**CRITICAL:** Task completion: required to be closed to properly drain the RHT and not drain other parts of the system.
3	**NOT Critical:** Verifying components which are already in the required position.
4	**CRITICAL:** Task completion: required to open valve to drain RHT.
5	**CRITICAL:** Task completion: required to throttle open to start the draining of the RHT.

COMMENTS:

CONDITIONS

When I tell you to begin, you are to DRAIN #1 RECYCLE HOLDUP TANK (RHT) TO THE WASTE HOLDUP TANK (WHT) **on Unit 1**. The conditions under which this task is to be performed are:

a. #1 RHT is not on service and all initial conditions have been met for draining it to the WHT (i.e., tank has remained idle for several days for fission gas decay).
b. You are directed by the Unit Operator to drain #1 RHT to the WHT using the preferred method using SOP-2.4.
c. A pre-job brief is **NOT** required.

CONDITIONS

When I tell you to begin, you are to DRAIN 2A RECYCLE HOLDUP TANK (RHT) TO THE WASTE HOLDUP TANK (WHT) **on Unit 2**. The conditions under which this task is to be performed are:

a. 2A RHT is not on service and all initial conditions have been met for draining it to the WHT (i.e., tank has remained idle for several days for fission gas decay).
b. You are directed by the Unit Operator to drain 2A RHT to the WHT using the preferred method using SOP-2.4.
c. A pre-job brief is **NOT** required.

EVALUATION CHECKLIST

ELEMENTS:	STANDARDS:	RESULTS: (CIRCLE)
____ START TIME		
1. (step 4.10.1.1) Verify 2A and 2B recycle evaporator feed pumps are in "local" and "pulled to lock"	Verify 2A and 2B REV feed pumps are in "local" and "pulled to lock" verifying or placing in "local" and "pull to lock". **CUE:** 2A and 2B REV feed pumps are in "local" and "pulled to lock".	S / U
*2. (step 4.10.1.2) Close 2A recycle evaporator feed pump discharge Q2E21V295A(8567B) and 2B recycle evaporator feed pump discharge Q2E21V295B(8567A)	Close 2A REV feed pump disch V295A(8567B) and 2B REV feed pump disch V295B(8567A) by turning the handwheels clockwise. **CUE:** V295A(8567B) and V295B(8567A) are closed.	S / U
3. (step 4.10.1.3) Identify desired RHT to be drained: 2A RHT, 2B RHT or 2C RHT	Check the block on the procedure for 2A RHT	S / U
4. (step 4.10.1.4) Check desired RHT **NOT** on service while draining.	Initial conditions say the 2A RHT is not on service. This can also be accomplished by checking the valve lineup. (2A RHT MAIN INLET ISO valve 2-CVC-V-8554A(V284A) closed and 2A RHT EQUIPMENT DRAINS AND VLV LEAKOFF INLET ISO valve 2-CVC-V-8557A(V311A) Locked closed.	S / U

EVALUATION CHECKLIST

ELEMENTS:		STANDARDS:	RESULTS: (CIRCLE)
5.	(step 4.10.1.5) Verify closed ALL RHT outlet isolations: 2A RHT Q2E21V286A(8563A) 2B RHT Q2E21V286B(8563B) 2C RHT Q2E21V286C(8563C)	Close or verify closed RHT outlet isolation valves 2A RHT V286A(8563A), 2B RHT V286B(8563B), and 2C RHT V286C(8563C). **CUE:** RHT outlet isolation valves V286A(8563A), V286B(8563B), and V286C(8563C) are closed.)	S / U
*6.	(step 4.10.1.6) Open recycle evaporator feed pump casing drain valves Q2E21V598A and Q2E21V598B	Open REV feed pump casing drain valves V598A and V598B by turning handwheels counterclockwise. **CUE:** REV feed pump casing drain valves V598A and V598B indicate open.	S / U
*7.	(step 4.10.1.7) Throttle open the 2A RHT outlet isolation to establish the desired drain rate 2A RHT Q2E21V286A(8563A)	Throttle open 2A RHT outlet isolation V286A(8563A) to establish the desired drain rate. **CUE:** V286A for 2A RHT throttled open and desired drain rate established.	S / U

_____ STOP TIME

Terminate when all elements of the task have been completed.

*** CRITICAL ELEMENTS:** Critical Elements are denoted with an Asterisk (*) preceding the element number.

GENERAL REFERENCES:

1. FNP-2-SOP-2.4, Version 52.0
2. K/As: 068K1.07 RO-2.7 SRO-2.9

GENERAL TOOLS AND EQUIPMENT:

None

Critical ELEMENT justification:

STEP	Evaluation
1	**NOT Critical:** Verifying components which are already in the required position.
2	CRITICAL: Task completion: required to be closed to properly drain the RHT and not drain other parts of the system.
3-4	**NOT Critical:** clerical part of task ensuring proper RHT is drained
5	**NOT Critical:** Verifying components which are already in the required position.
6	CRITICAL: Task completion: required to open valve to drain RHT.
7	CRITICAL: Task completion: required to throttle open to start the draining of the RHT.

COMMENTS:

CONDITIONS

When I tell you to begin, you are to DRAIN 2A RECYCLE HOLDUP TANK (RHT) TO THE WASTE HOLDUP TANK (WHT) **on Unit 2**. The conditions under which this task is to be performed are:

a. 2A RHT is not on service and all initial conditions have been met for draining it to the WHT (i.e., tank has remained idle for several days for fission gas decay).
b. You are directed by the Unit Operator to drain 2A RHT to the WHT using the preferred method using SOP-2.4.
c. A pre-job brief is **NOT** required.

4.10 Draining RHTs

NOTE:	**RHT should not be on service and should remain idle for several days if possible for fission gas decay unless the source of the water is NOT from the RCS.**

4.10.1 Preferred method of draining RHTs to the WHT

4.10.1.1 Verify 1A and 1B recycle evaporator feed pumps are in "local" and "pulled to lock".

4.10.1.2 Close the following valves:

- 1A recycle evaporator feed pump disch 1-CVC-V-8567B (Q1E21V295A)
- 1B recycle evaporator feed pump disch 1-CVC-V-8567A (Q1E21V295B).

4.10.1.3 Verify closed RHT outlet isolations:

- #1 RHT 1-CVC-V-8563A (Q1E21V286A)
- #2 RHT 1-CVC-V-8563B (Q1E21V286B)
- #3 RHT 1-CVC-V-8563C (Q1E21V286C)

4.10.1.4 Open the following valves:

- recycle evaporator feed pump casing drain valve Q1E21V577A
- recycle evaporator feed pump casing drain valve Q1E21V577B.

4.10.1.5 Throttle open the required RHT outlet isolation to establish the desired drain rate.

- #1 RHT 1-CVC-V-8563A (Q1E21V286A)
- #2 RHT 1-CVC-V-8563B (Q1E21V286B)
- #3 RHT 1-CVC-V-8563C (Q1E21V286C)

4.10.1.6 When draining is complete, close the following valves:

- recycle evaporator feed pump casing drain valve Q1E21V577A
- recycle evaporator feed pump casing drain valve Q1E21V577B.

4.10.1.7 Close the RHT outlet isolation valve opened in step 4.10.1.5.

4.10 Draining Recycle Hold-Up Tanks (RHT):

NOTE: RHT should NOT be on service and should remain idle for several days if possible for fission gas decay unless the source of the water is NOT from the RCS.

4.10.1 IF desired to drain RHTs to WHT using Preferred method, THEN perform the following:

4.10.1.1 Verify 2A and 2B recycle evaporator feed pumps are in "local" and "pulled to lock".

4.10.1.2 Close the following valves:

- 2A REV FEED PUMP DISCH ISO, 2-CVC-V-8567B (Q2E21V295A)
- 2B REV FEED PUMP DISCH ISO, 2-CVC-V-8567A (Q2E21V295B).

4.10.1.3 Identify desired RHT to be drained:

2A RHT ☐,
2B RHT ☐,
2C RHT ☐,

4.10.1.4 Check desired RHT NOT on service while draining.

4.10.1.5 Check all RHT outlet isolations closed:

RHT	VALVE
2A	REV FEED PUMP SUCT FROM #1 RHT, Q2E21V286A (#1 RHT 2-CVC-V-8563A)
2B	REV FEED PUMP SUCT FROM #2 RHT, Q2E21V286B (#2 RHT 2-CVC-V-8563B)
2C	REV FEED PUMP SUCT FROM #3 RHT, Q2E21V286C (#3 RHT 2-CVC-V-8563C)

(Step 4.10.1 continued on next page)

4.10.1.6 Open the following valves:

- 2A REV FEED PUMP CASING DRN, Q2E21V598A
- 2B REV FEED PUMP CASING DRN, Q2E21V598B.

4.10.1.7 Slowly throttle open desired RHT outlet isolation to establish the desired drain rate:

RHT	VALVE
2A	REV FEED PUMP SUCT FROM #1 RHT, Q2E21V286A (#1 RHT 2-CVC-V-8563A)
2B	REV FEED PUMP SUCT FROM #2 RHT, Q2E21V286B (#2 RHT 2-CVC-V-8563B)
2C	REV FEED PUMP SUCT FROM #3 RHT, Q2E21V286C (#3 RHT 2-CVC-V-8563C)

4.10.1.8 WHEN RHT level ≈7% OR WHT at desired level THEN, close the following valves:

- 2A REV FEED PUMP CASING DRN, Q2E21V598A
- 2B REV FEED PUMP CASING DRN, Q2E21V598B

4.10.1.9 Close the RHT outlet isolation valve opened in Step 4.10.1.7.

4.10.1.10 Open the following valves:

- 2A REV FEED PUMP DISCH ISO, 2-CVC-V-8567B (Q2E21V295A)
- 2B REV FEED PUMP DISCH ISO, 2-CVC-V-8567A (Q2E21V295B).

(Step 4.10 continued on next page)