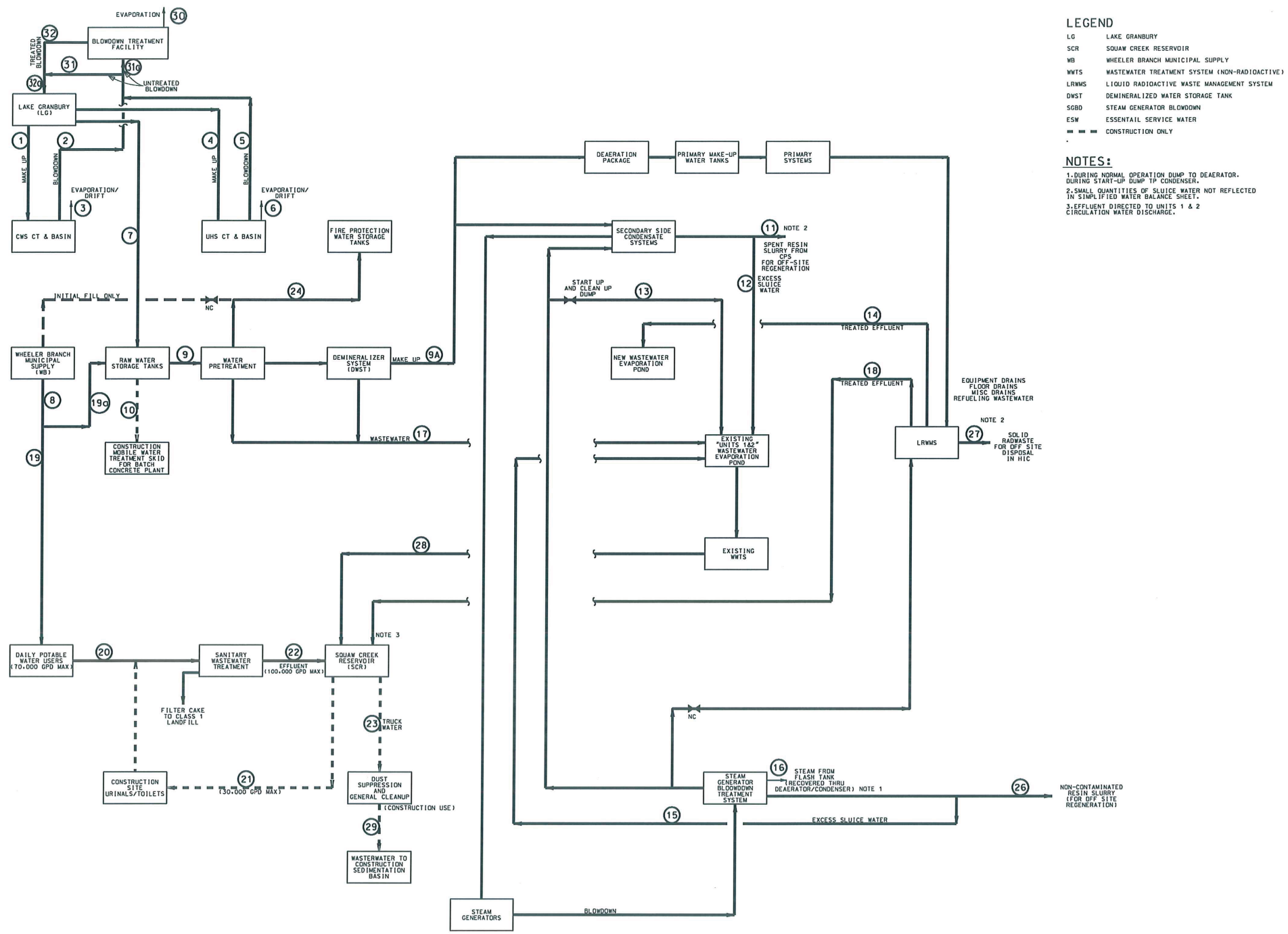

LEGEND

LG	LAKE GRANBURY
SCR	SQUAW CREEK RESERVOIR
WB	WHEELER BRANCH MUNICIPAL SUPPLY
WWTS	WASTEWATER TREATMENT SYSTEM (NON-RADIOACTIVE)
LRWMS	LIQUID RADIOACTIVE WASTE MANAGEMENT SYSTEM
DWST	DEMINERALIZED WATER STORAGE TANK
SGBD	STEAM GENERATOR BLOWDOWN
ESW	ESSENTAIL SERVICE WATER
= = =	CONSTRUCTION ONLY

NOTES:

1. DURING NORMAL OPERATION DUMP TO DEAERATOR. DURING START-UP DUMP TP CONDENSER.
2. SMALL QUANTITIES OF SLUICE WATER NOT REFLECTED IN SIMPLIFIED WATER BALANCE SHEET.
3. EFFLUENT DIRECTED TO UNITS 1 & 2 CIRCULATION WATER DISCHARGE.

Figure 3.3-1 Water Balance (Sheet 1 of 3)

Steam	Description	Flow @ Max Power Operation[a]	Units	Waste Constituents	Comments and References
1	CWS Cooling Tower Makeup from Lake Granbury (LG)	31,200 per Unit	gpm		Secondary Side Water Cooling System Study Case1Ba (revised by RFI-0202) From Lake Granbury to Cooling Tower Section 5.0 Optimization Study SSCWS - Final Report dated 8/15/07
2	CWS Cooling Tower Blowdown	12,900 per Unit	gpm	TDS-2.4 times LG value.	Secondary Side Water Cooling System Study Case1Ba (revised by RFI-0202) From Cooling Tower to Lake Granbury (LG) Section 5.0 Optimization Study SSCWS - Final Report dated 8/15/07
3	CWS Cooling Tower Evaporation + Drift	18,300 per Unit	gpm		Secondary Side Water Cooling system Study Case1Ba(revised by RFI-0202)
4	UHS Cooling Tower Makeup from LG	274 per Unit	gpm		(revised by RFI-0202)
5	UHS Cooling Tower Blowdown	109 per Unit	gpm	TDS- 2.4 times LG value.	(revised by RFI-0202)
6	UHS Cooling Tower Evaporation + Drift	165 per Unit	gpm		(revised by RFI-0202)
7	Raw water from LG to raw water storage tanks	470- 1,100 total 2 Units	gpm		A blend of LG and potable water is expected. Minimum make-up for operation is estimated from Luminant at ~ 200 gpm per Unit. Maximum construction flushing is estimated at ~ 500 gpm per Unit.
8	Potable water from WB to CPNPP site	0 to 350 total 4 Units	gpm		Assumed a 350 gpm uninterruptible supply of potable water from Somervell County Water District (SCWD) will be made available to supply Units 1- 4.
9	Raw water to pretreatment	1,100 to 1,250 total 2 Units	gpm		Assume 80% recovery as demin water.
9A	Demineralized Make-up to Primary Water Tanks	200 to 500 per Unit			See 7 above.
10	Raw water to construction mobile treatment skid	250 total 2 Units	gpm		URS estimate. Assumed (2) shifts/day 8hr x 2 = 16 hrs/day. Necessary to support concrete batch plant during construction only
11	Spent resin slurry from CPS	85	gpd		Assumed one time per month for one hour. Demin volume is ~ 5,000 gal, ~ 85gpd for 1 hr, which is ~ 95% recycle.
12	Excess sluice water from CPS	85	gpd		Assumed one time per month for one hour. Demin volume is ~ 5,000 gal, ~ 85gpd for 1 hr, which is ~ 95% recycle.
13	SGBD blowdown wastewater to existing evaporation pond	1,165 per Units (see comment)	gpm		Assume during plant startup flow duration will be 4 hrs. Normal power operation flow duration is to be determined.
14	LRWMS effluent to new evaporation pond	1,500 total 2 Units	gals/day		Rad waste estimate. Assumed 60% of total released effluent from LRWMS.
15	Excess sluice water from SGBD treatment	N/A	gpm		Neglect for simplified balance
16	Evaporation from SGBD flash tank	N/A			Evaporated steam is condensed and recovered in the main condenser.
17	Water treatment wastewater to existing evaporation pond	100 to 250 total 2 Units	gpm	pH- 6 to 9; TDS- 5 times feed water TDS; resin regeneration salts- sodium sulfate, calcium sulfate and sodium chloride; suspended solids & silts- from filter back wash	URS estimate. Assumed 80% recovery of feed water as demineralized water.

Figure 3.3-1 Water Balance (Sheet 2 of 3)

Steam	Description	Flow @ Max Power Operation[(a)]	Units	Waste Constituents	Comments and References
18	LRWMS effluent to existing Unit 1 & 2 circulating water discharge	1,000 total 2 Units	gals/day		Rad waste estimate. Assumed 40% of total released effluent from LRWMS.
19	Potable water to daily potable water users	50 total 2 Units	gpm		URS estimate
19a	Potable water to raw water storage tank	300 max. total 2 units	gpm		250 gpm continuous for construction mobile treatment skid (refer to stream 10). After construction and Unit 1 & 2 tie-in, approx. 250 gpm would be available to supplement raw water supply from LG.
20	Sanitary wastewater from potable water toilets/urinals	70,000 total 2 Units	gals/day		Sanitary wastewater treatment system's COLA concept design report.
21	Non-potable water to construction toilets/urinals	30,000 total 2 Units	gals/day		Sanitary wastewater treatment system's COLA concept design report. During construction only estimate.
22	Sanitary wastewater treatment system effluent	100,000 total 2 Units	gals/day	Effluent will meet permit limits (see SWTS System Description for permit limits).	Sanitary wastewater treatment system's COLA concept design report
23	Dust suppression & general cleanup water	63,000 total 2 Units	gals/day		Trucked to user locations. During construction only estimate
24	Fire protection water storage tank makeup water	N/A			Neglect for simplified balance. Initial fill is from potable water supply.
25	Evaporation loss from fuel pool tanks	N/A			Neglect for simplified balance
26	Non-contaminated resin slurry from SGBD treatment system	N/A			Neglect for simplified balance
27	Solid radwaste for off site disposal in HIC	N/A			Neglect for simplified balance
28	Existing pond wastewater treatment system effluent	N/A			Neglect for simplified balance
29	Wastewater to construction sedimentation basin	63,000 total 2 Units	gals/day		URS during construction only estimate
30	Evaporation from Blowdown Treatment Facility (BDTF)	2,577 per Unit	gpm		Flow from BDTF to evaporation ponds is estimated at 2,577 gpm/unit, which includes ultrafiltration (UF) backwash and reverse osmosis (RO) reject water.
31	Untreated Blowdown to Lake Granbury (LG)	2,272 per Unit	gpm	8,402 mg/L TDS based upon Lake Granbury maximum concentrations	A portion of the cooling tower blowdown by-passes the BDTF.
31a	Blowdown to BDTF	10,737 per Unit	gpm	8,402 mg/L TDS based upon Lake Granbury maximum concentrations	Blowdown from Secondary Side and ESW cooling towers are combined for treatment in the BDTF.
32	Treated Blowdown to LG	8,160 per Unit	gpm	91.9 mg/L TDS	Treated blowdown flow is based upon UF system operating at 95% recovery and RO system operating at 80% recovery. Total input flow to BDTF is estimated at 10,737 gpm/unit.
32a	Total Combined Discharge to LG	10,432 per Unit	gpm	1,902 mg/L TDS	Untreated blowdown (31) and treated blowdown (32) are combined for discharge to LG based upon maintaining <2500 mg/L TDS and <1000 mg/L Cl in the combined discharge.

(a) Flow is assumed to be continuous.

Figure 3.3-1 Water Balance (Sheet 3 of 3)