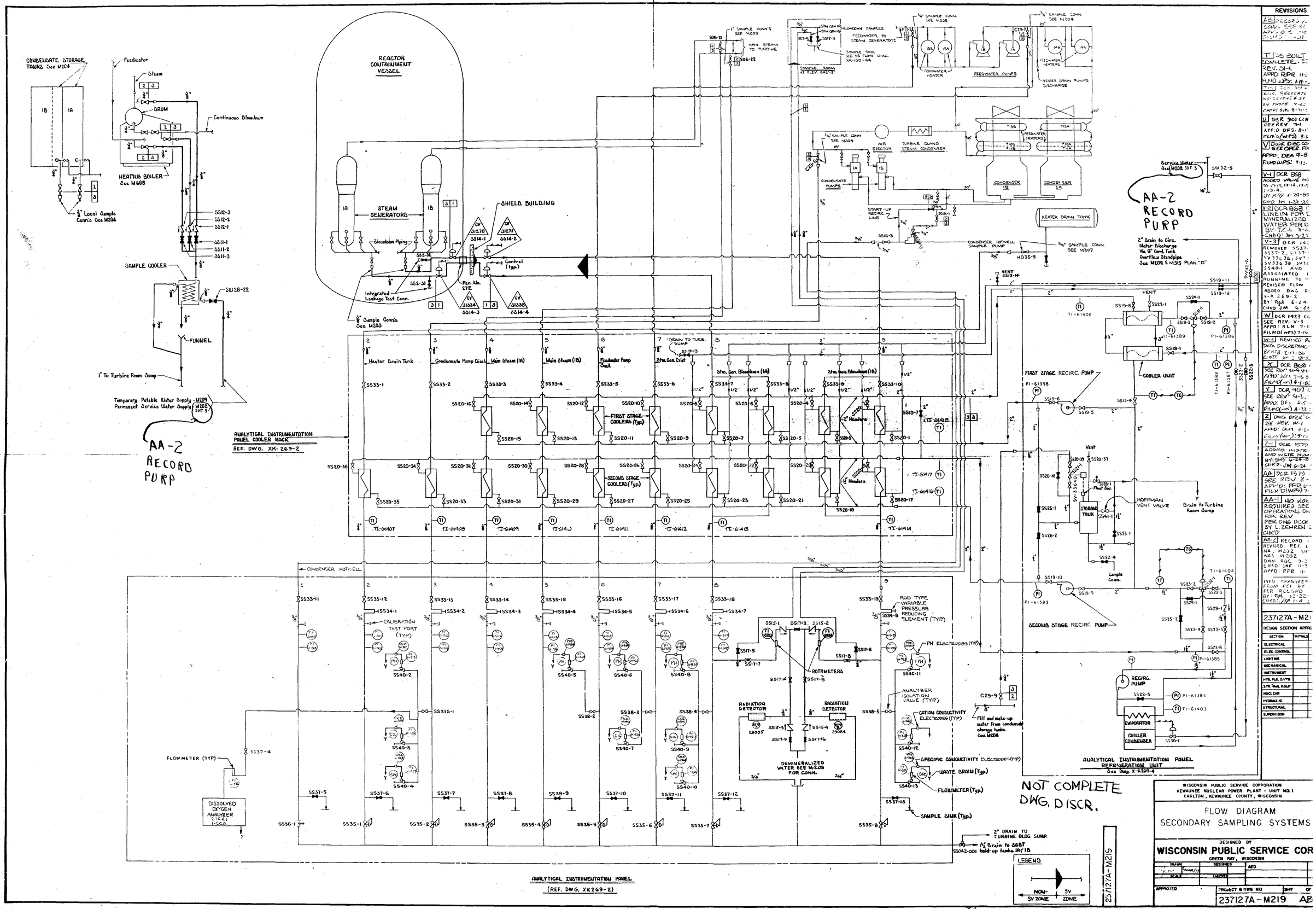

NOT COMPLETE DWG. DISCR.

REVISIONS

237127A-M219

WISCONSIN PUBLIC SERVICE CORPORATION
KEWAUNEE NUCLEAR POWER PLANT - UNIT NO. 1
CARLTON, KEWAUNEE COUNTY, WISCONSIN

FLOW DIAGRAM
SECONDARY SAMPLING SYSTEMS

DESIGNED BY
WISCONSIN PUBLIC SERVICE COR
GREEN BAY, WISCONSIN

PROJECT & DWG NO 237127A-M219 AB

APERTURE CARD

8802100161