7.1 Organic Liquid Storage Tanks

7.1.1 Process Description[1-2]

Storage vessels containing organic liquids can be found in many industries, including (1) petroleum producing and refining, (2) petrochemical and chemical manufacturing, (3) bulk storage and transfer operations, and (4) other industries consuming or producing organic liquids. Organic liquids in the petroleum industry, usually called petroleum liquids, generally are mixtures of hydrocarbons having dissimilar true vapor pressures (for example, gasoline and crude oil). Organic liquids in the chemical industry, usually called volatile organic liquids, are composed of pure chemicals or mixtures of chemicals with similar true vapor pressures (for example, benzene or a mixture of isopropyl and butyl alcohols).

Six basic tank designs are used for organic liquid storage vessels: fixed roof (vertical and horizontal), external floating roof, domed external (or covered) floating roof, internal floating roof, variable vapor space, and pressure (low and high). A brief description of each tank is provided below. Loss mechanisms associated with each type of tank are provided in Section 7.1.2.

The emission estimating equations presented in Section 7.1 were developed by the American Petroleum Institute (API). API retains the copyright to these equations. API has granted permission for the nonexclusive; noncommercial distribution of this material to governmental and regulatory agencies. However, API reserves its rights regarding all commercial duplication and distribution of its material. Therefore, the material presented in Section 7.1 is available for public use, but the material cannot be sold without written permission from the American Petroleum Institute and the U. S. Environmental Protection Agency.

7.1.1.1 Fixed Roof Tanks –

A typical vertical fixed roof tank is shown in Figure 7.1-1. This type of tank consists of a cylindrical steel shell with a permanently affixed roof, which may vary in design from cone- or dome-shaped to flat. Losses from fixed roof tanks are caused by changes in temperature, pressure, and liquid level.

Fixed roof tanks are either freely vented or equipped with a pressure/vacuum vent. The latter allows the tanks to operate at a slight internal pressure or vacuum to prevent the release of vapors during very small changes in temperature, pressure, or liquid level. Of current tank designs, the fixed roof tank is the least expensive to construct and is generally considered the minimum acceptable equipment for storing organic liquids.

Horizontal fixed roof tanks are constructed for both above-ground and underground service and are usually constructed of steel, steel with a fiberglass overlay, or fiberglass-reinforced polyester. Horizontal tanks are generally small storage tanks with capacities of less than 40,000 gallons. Horizontal tanks are constructed such that the length of the tank is not greater than six times the diameter to ensure structural integrity. Horizontal tanks are usually equipped with pressure-vacuum vents, gauge hatches and sample wells, and manholes to provide access to these tanks. In addition, underground tanks may be

cathodically protected to prevent corrosion of the tank shell. Cathodic protection is accomplished by placing sacrificial anodes in the tank that are connected to an impressed current system or by using galvanic anodes in the tank. However, internal cathodic protection against corrosion is no longer widely used in the petroleum industry, due to corrosion inhibitors that are now found in most refined petroleum products.

The potential emission sources for above-ground horizontal tanks are the same as those for vertical fixed roof tanks. Emissions from underground storage tanks are associated mainly with changes in the liquid level in the tank. Losses due to changes in temperature or barometric pressure are minimal for underground tanks because the surrounding earth limits the diurnal temperature change, and changes in the barometric pressure result in only small losses.

7.1.1.2 External Floating Roof Tanks –

A typical external floating roof tank (EFRT) consists of an open- topped cylindrical steel shell equipped with a roof that floats on the surface of the stored liquid. The floating roof consists of a deck, fittings, and rim seal system. Floating decks that are currently in use are constructed of welded steel plate and are of two general types: pontoon or double-deck. Pontoon-type and double-deck-type external floating roof tanks are shown in Figures 7.1-2 and 7.1-3, respectively. With all types of external floating roof tanks, the roof rises and falls with the liquid level in the tank. External floating decks are equipped with a rim seal system, which is attached to the deck perimeter and contacts the tank wall. The purpose of the floating roof and rim seal system is to reduce evaporative loss of the stored liquid. Some annular space remains between the seal system and the tank wall. The seal system slides against the tank wall as the roof is raised and lowered. The floating deck is also equipped with fittings that penetrate the deck and serve operational functions. The external floating roof design is such that evaporative losses from the stored liquid are limited to losses from the rim seal system and deck fittings (standing storage loss) and any exposed liquid on the tank walls (withdrawal loss).

7.1.1.3 Internal Floating Roof Tanks –

An internal floating roof tank (IFRT) has both a permanent fixed roof and a floating roof inside. There are two basic types of internal floating roof tanks: tanks in which the fixed roof is supported by vertical columns within the tank, and tanks with a self-supporting fixed roof and no internal support columns. Fixed roof tanks that have been retrofitted to use a floating roof are typically of the first type. External floating roof tanks that have been converted to internal floating roof tanks typically have a self-supporting roof. Newly constructed internal floating roof tanks may be of either type. The deck in internal floating roof tanks rises and falls with the liquid level and either floats directly on the liquid surface (contact deck) or rests on pontoons several inches above the liquid surface (noncontact deck). The majority of aluminum internal floating roofs currently in service have noncontact decks. A typical internal floating roof tank is shown in Figure 7.1-4.

Contact decks can be (1) aluminum sandwich panels that are bolted together, with a honeycomb aluminum core floating in contact with the liquid; (2) pan steel decks floating in contact with the liquid, with or without pontoons; and (3) resin-coated, fiberglass reinforced polyester (FRP), buoyant panels floating in contact with the liquid. The majority of internal contact floating decks currently in service are aluminum sandwich panel-type or pan steel-type. The FRP decks are less common. The panels of pan steel decks are usually welded together.

Noncontact decks are the most common type currently in use. Typical noncontact decks are constructed of an aluminum deck and an aluminum grid framework supported above the liquid surface by tubular aluminum pontoons or some other buoyant structure. The noncontact decks usually have bolted

deck seams. Installing a floating roof minimizes evaporative losses of the stored liquid. Both contact and noncontact decks incorporate rim seals and deck fittings for the same purposes previously described for external floating roof tanks. Evaporative losses from floating roofs may come from deck fittings, nonwelded deck seams, and the annular space between the deck and tank wall. In addition, these tanks are freely vented by circulation vents at the top of the fixed roof. The vents minimize the possibility of organic vapor accumulation in the tank vapor space in concentrations approaching the flammable range. An internal floating roof tank not freely vented is considered a pressure tank. Emission estimation methods for such tanks are not provided in AP-42.

7.1.1.4 Domed External Floating Roof Tanks –

Domed external (or covered) floating roof tanks have the heavier type of deck used in external floating roof tanks as well as a fixed roof at the top of the shell like internal floating roof tanks. Domed external floating roof tanks usually result from retrofitting an external floating roof tank with a fixed roof. This type of tank is very similar to an internal floating roof tank with a welded deck and a self supporting fixed roof. A typical domed external floating roof tank is shown in Figure 7.1-5.

As with the internal floating roof tanks, the function of the fixed roof is not to act as a vapor barrier, but to block the wind. The type of fixed roof most commonly used is a self supporting aluminum dome roof, which is of bolted construction. Like the internal floating roof tanks, these tanks are freely vented by circulation vents at the top of the fixed roof. The deck fittings and rim seals, however, are identical to those on external floating roof tanks. In the event that the floating deck is replaced with the lighter IFRT-type deck, the tank would then be considered an internal floating roof tank.

7.1.1.5 Variable Vapor Space Tanks –

Variable vapor space tanks are equipped with expandable vapor reservoirs to accommodate vapor volume fluctuations attributable to temperature and barometric pressure changes. Although variable vapor space tanks are sometimes used independently, they are normally connected to the vapor spaces of one or more fixed roof tanks. The two most common types of variable vapor space tanks are lifter roof tanks and flexible diaphragm tanks.

Lifter roof tanks have a telescoping roof that fits loosely around the outside of the main tank wall. The space between the roof and the wall is closed by either a wet seal, which is a trough filled with liquid, or a dry seal, which uses a flexible coated fabric.

Flexible diaphragm tanks use flexible membranes to provide expandable volume. They may be either separate gasholder units or integral units mounted atop fixed roof tanks.

Variable vapor space tank losses occur during tank filling when vapor is displaced by liquid. Loss of vapor occurs only when the tank's vapor storage capacity is exceeded.

7.1.1.6 Pressure Tanks –

Two classes of pressure tanks are in general use: low pressure (2.5 to 15 psig) and high pressure (higher than 15 psig). Pressure tanks generally are used for storing organic liquids and gases with high vapor pressures and are found in many sizes and shapes, depending on the operating pressure of the tank. Pressure tanks are equipped with a pressure/vacuum vent that is set to prevent venting loss from boiling and breathing loss from daily temperature or barometric pressure changes. High-pressure storage tanks can be operated so that virtually no evaporative or working losses occur. In low-pressure tanks, working

losses can occur with atmospheric venting of the tank during filling operations. No appropriate correlations are available to estimate vapor losses from pressure tanks.

7.1.2 Emission Mechanisms And Control

Emissions from organic liquids in storage occur because of evaporative loss of the liquid during its storage and as a result of changes in the liquid level. The emission sources vary with tank design, as does the relative contribution of each type of emission source. Emissions from fixed roof tanks are a result of evaporative losses during storage (known as breathing losses or standing storage losses) and evaporative losses during filling and emptying operations (known as working losses). External and internal floating roof tanks are emission sources because of evaporative losses that occur during standing storage and withdrawal of liquid from the tank. Standing storage losses are a result of evaporative losses through rim seals, deck fittings, and/or deck seams. The loss mechanisms for fixed roof and external and internal floating roof tanks are described in more detail in this section. Variable vapor space tanks are also emission sources because of evaporative losses that result during filling operations. The loss mechanism for variable vapor space tanks is also described in this section. Emissions occur from pressure tanks, as well. However, loss mechanisms from these sources are not described in this section.

7.1.2.1 Fixed Roof Tanks –

The two significant types of emissions from fixed roof tanks are storage and working losses. Storage loss is the expulsion of vapor from a tank through vapor expansion and contraction, which are the results of changes in temperature and barometric pressure. This loss occurs without any liquid level change in the tank.

The combined loss from filling and emptying is called working loss. Evaporation during filling operations is a result of an increase in the liquid level in the tank. As the liquid level increases, the pressure inside the tank exceeds the relief pressure and vapors are expelled from the tank. Evaporative loss during emptying occurs when air drawn into the tank during liquid removal becomes saturated with organic vapor and expands, thus exceeding the capacity of the vapor space.

Fixed roof tank emissions vary as a function of vessel capacity, vapor pressure of the stored liquid, utilization rate of the tank, and atmospheric conditions at the tank location.

Several methods are used to control emissions from fixed roof tanks. Emissions from fixed roof tanks can be controlled by installing an internal floating roof and seals to minimize evaporation of the product being stored. The control efficiency of this method ranges from 60 to 99 percent, depending on the type of roof and seals installed and on the type of organic liquid stored.

Vapor balancing is another means of emission control. Vapor balancing is probably most common in the filling of tanks at gasoline stations. As the storage tank is filled, the vapors expelled from the storage tank are directed to the emptying gasoline tanker truck. The truck then transports the vapors to a centralized station where a vapor recovery or control system is used to control emissions. Vapor balancing can have control efficiencies as high as 90 to 98 percent if the vapors are subjected to vapor recovery or control. If the truck vents the vapor to the atmosphere instead of to a recovery or control system, no control is achieved.

Vapor recovery systems collect emissions from storage vessels and convert them to liquid product. Several vapor recovery procedures may be used, including vapor/liquid absorption, vapor compression, vapor cooling, vapor/solid adsorption, or a combination of these. The overall control

efficiencies of vapor recovery systems are as high as 90 to 98 percent, depending on the methods used, the design of the unit, the composition of vapors recovered, and the mechanical condition of the system.

In a typical thermal oxidation system, the air/vapor mixture is injected through a burner manifold into the combustion area of an incinerator. Control efficiencies for this system can range from 96 to 99 percent.

7.1.2.2 Floating Roof Tanks[2-7] –

Total emissions from floating roof tanks are the sum of withdrawal losses and standing storage losses. Withdrawal losses occur as the liquid level, and thus the floating roof, is lowered. Some liquid remains on the inner tank wall surface and evaporates. For an internal floating roof tank that has a column supported fixed roof, some liquid also clings to the columns and evaporates. Evaporative loss occurs until the tank is filled and the exposed surfaces are again covered. Standing storage losses from floating roof tanks include rim seal and deck fitting losses, and for internal floating roof tanks also include deck seam losses for constructions other than welded decks. Other potential standing storage loss mechanisms include breathing losses as a result of temperature and pressure changes.

Rim seal losses can occur through many complex mechanisms, but for external floating roof tanks, the majority of rim seal vapor losses have been found to be wind induced. No dominant wind loss mechanism has been identified for internal floating roof or domed external floating roof tank rim seal losses. Losses can also occur due to permeation of the rim seal material by the vapor or via a wicking effect of the liquid, but permeation of the rim seal material generally does not occur if the correct seal fabric is used. Testing has indicated that breathing, solubility, and wicking loss mechanisms are small in comparison to the wind-induced loss. The rim seal factors presented in this section incorporate all types of losses.

The rim seal system is used to allow the floating roof to rise and fall within the tank as the liquid level changes. The rim seal system also helps to fill the annular space between the rim and the tank shell and therefore minimize evaporative losses from this area. A rim seal system may consist of just a primary seal or a primary and a secondary seal, which is mounted above the primary seal. Examples of primary and secondary seal configurations are shown in Figures 7.1-6, 7.1-7, and 7.1-8.

The primary seal serves as a vapor conservation device by closing the annular space between the edge of the floating deck and the tank wall. Three basic types of primary seals are used on external floating roofs: mechanical (metallic) shoe, resilient filled (nonmetallic), and flexible wiper seals. Some primary seals on external floating roof tanks are protected by a weather shield. Weather shields may be of metallic, elastomeric, or composite construction and provide the primary seal with longer life by protecting the primary seal fabric from deterioration due to exposure to weather, debris, and sunlight. Internal floating roofs typically incorporate one of two types of flexible, product-resistant seals: resilient foam-filled seals or wiper seals. Mechanical shoe seals, resilient filled seals, and wiper seals are discussed below.

A mechanical shoe seal uses a light-gauge metallic band as the sliding contact with the shell of the tank, as shown in Figure 7.1-7. The band is formed as a series of sheets (shoes) which are joined together to form a ring, and are held against the tank shell by a mechanical device. The shoes are normally 3 to 5 feet deep, providing a potentially large contact area with the tank shell. Expansion and contraction of the ring can be provided for as the ring passes over shell irregularities or rivets by jointing narrow pieces of fabric into the ring or by crimping the shoes at intervals. The bottoms of the shoes extend below the liquid surface to confine the rim vapor space between the shoe and the floating deck.

The rim vapor space, which is bounded by the shoe, the rim of the floating deck, and the liquid surface, is sealed from the atmosphere by bolting or clamping a coated fabric, called the primary seal fabric, which extends from the shoe to the rim to form an "envelope". Two locations are used for attaching the primary seal fabric. The fabric is most commonly attached to the top of the shoe and the rim of the floating deck. To reduce the rim vapor space, the fabric can be attached to the shoe and the floating deck rim near the liquid surface. Rim vents can be used to relieve any excess pressure or vacuum in the vapor space.

A resilient filled seal can be mounted to eliminate the vapor space between the rim seal and liquid surface (liquid mounted) or to allow a vapor space between the rim seal and the liquid surface (vapor mounted). Both configurations are shown in Figures 7.1-6 and 7.1-7. Resilient filled seals work because of the expansion and contraction of a resilient material to maintain contact with the tank shell while accommodating varying annular rim space widths. These rim seals allow the roof to move up and down freely, without binding.

Resilient filled seals typically consist of a core of open-cell foam encapsulated in a coated fabric. The seals are attached to a mounting on the deck perimeter and extend around the deck circumference. Polyurethane-coated nylon fabric and polyurethane foam are commonly used materials. For emission control, it is important that the attachment of the seal to the deck and the radial seal joints be vapor-tight and that the seal be in substantial contact with the tank shell.

Wiper seals generally consist of a continuous annular blade of flexible material fastened to a mounting bracket on the deck perimeter that spans the annular rim space and contacts the tank shell. This type of seal is depicted in Figure 7.1-6. New tanks with wiper seals may have dual wipers, one mounted above the other. The mounting is such that the blade is flexed, and its elasticity provides a sealing pressure against the tank shell.

Wiper seals are vapor mounted; a vapor space exists between the liquid stock and the bottom of the seal. For emission control, it is important that the mounting be vapor-tight, that the seal extend around the circumference of the deck and that the blade be in substantial contact with the tank shell. Two types of materials are commonly used to make the wipers. One type consists of a cellular, elastomeric material tapered in cross section with the thicker portion at the mounting. Rubber is a commonly used material; urethane and cellular plastic are also available. All radial joints in the blade are joined. The second type of material that can be used is a foam core wrapped with a coated fabric. Polyurethane on nylon fabric and polyurethane foam are common materials. The core provides the flexibility and support, while the fabric provides the vapor barrier and wear surface.

A secondary seal may be used to provide some additional evaporative loss control over that achieved by the primary seal. Secondary seals can be either flexible wiper seals or resilient filled seals. For external floating roof tanks, two configurations of secondary seals are available: shoe mounted and rim mounted, as shown in Figure 7.1-8. Rim mounted secondary seals are more effective in reducing losses than shoe mounted secondary seals because they cover the entire rim vapor space. For internal floating roof tanks, the secondary seal is mounted to an extended vertical rim plate, above the primary seal, as shown in Figure 7.1-8. However, for some floating roof tanks, using a secondary seal further limits the tank's operating capacity due to the need to keep the seal from interfering with fixed roof rafters or to keep the secondary seal in contact with the tank shell when the tank is filled.

The deck fitting losses from floating roof tanks can be explained by the same mechanisms as the rim seal losses. However, the relative contribution of each mechanism is not known. The deck fitting losses identified in this section account for the combined effect of all of the mechanisms.

Numerous fittings pass through or are attached to floating roof decks to accommodate structural support components or allow for operational functions. Internal floating roof deck fittings are typically of different configuration than those for external floating roof decks. Rather than having tall housings to avoid rainwater entry, internal floating roof deck fittings tend to have lower profile housings to minimize the potential for the fitting to contact the fixed roof when the tank is filled. Deck fittings can be a source of evaporative loss when they require openings in the deck. The most common components that require openings in the deck are described below.

1. Access hatches. An access hatch is an opening in the deck with a peripheral vertical well that is large enough to provide passage for workers and materials through the deck for construction or servicing. Attached to the opening is a removable cover that may be bolted and/or gasketed to reduce evaporative loss. On internal floating roof tanks with noncontact decks, the well should extend down into the liquid to seal off the vapor space below the noncontact deck. A typical access hatch is shown in Figure 7.1-9.

2. Gauge-floats. A gauge-float is used to indicate the level of liquid within the tank. The float rests on the liquid surface and is housed inside a well that is closed by a cover. The cover may be bolted and/or gasketed to reduce evaporation loss. As with other similar deck penetrations, the well extends down into the liquid on noncontact decks in internal floating roof tanks. A typical gauge-float and well are shown in Figure 7.1-9.

3. Gauge-hatch/sample ports. A gauge-hatch/sample port consists of a pipe sleeve equipped with a self-closing gasketed cover (to reduce evaporative losses) and allows hand-gauging or sampling of the stored liquid. The gauge-hatch/sample port is usually located beneath the gauger's platform, which is mounted on top of the tank shell. A cord may be attached to the self-closing gasketed cover so that the cover can be opened from the platform. A typical gauge-hatch/sample port is shown in Figure 7.1-9.

4. Rim vents. Rim vents are used on tanks equipped with a seal design that creates a vapor pocket in the seal and rim area, such as a mechanical shoe seal. A typical rim vent is shown in Figure 7.1-10. The vent is used to release any excess pressure or vacuum that is present in the vapor space bounded by the primary-seal shoe and the floating roof rim and the primary seal fabric and the liquid level. Rim vents usually consist of weighted pallets that rest on a gasketed cover.

5. Deck drains. Currently two types of deck drains are in use (closed and open deck drains) to remove rainwater from the floating deck. Open deck drains can be either flush or overflow drains. Both types consist of a pipe that extends below the deck to allow the rainwater to drain into the stored liquid. Only open deck drains are subject to evaporative loss. Flush drains are flush with the deck surface. Overflow drains are elevated above the deck surface. Typical overflow and flush deck drains are shown in Figure 7.1-10. Overflow drains are used to limit the maximum amount of rainwater that can accumulate on the floating deck, providing emergency drainage of rainwater if necessary. Closed deck drains carry rainwater from the surface of the deck though a flexible hose or some other type of piping system that runs through the stored liquid prior to exiting the tank. The rainwater does not come in contact with the liquid, so no evaporative losses result. Overflow drains are usually used in conjunction with a closed drain system to carry rainwater outside the tank.

6. Deck legs. Deck legs are used to prevent damage to fittings underneath the deck and to allow for tank cleaning or repair, by holding the deck at a predetermined distance off the tank bottom. These supports consist of adjustable or fixed legs attached to the floating deck or hangers suspended from the fixed roof. For adjustable legs or hangers, the load-carrying element passes through a well or sleeve into the deck. With noncontact decks, the well should extend into the liquid. Evaporative losses may occur in the annulus between the deck leg and its sleeve. A typical deck leg is shown in Figure 7.1-10.

7. Unslotted guidepoles and wells. A guidepole is an antirotational device that is fixed to the top and bottom of the tank, passing through a well in the floating roof. The guidepole is used to prevent adverse movement of the roof and thus damage to deck fittings and the rim seal system. In some cases, an unslotted guidepole is used for gauging purposes, but there is a potential for differences in the pressure, level, and composition of the liquid inside and outside of the guidepole. A typical guidepole and well are shown in Figure 7.1-11.

8. Slotted (perforated) guidepoles and wells. The function of the slotted guidepole is similar to the unslotted guidepole but also has additional features. Perforated guidepoles can be either slotted or drilled hole guidepoles. A typical slotted guidepole and well are shown in Figure 7.1-11. As shown in this figure, the guide pole is slotted to allow stored liquid to enter. The same can be accomplished with drilled holes. The liquid entering the guidepole is well mixed, having the same composition as the remainder of the stored liquid, and is at the same liquid level as the liquid in the tank. Representative samples can therefore be collected from the slotted or drilled hole guidepole. However, evaporative loss from the guidepole can be reduced by modifying the guidepole or well or by placing a float inside the guidepole. Guidepoles are also referred to as gauge poles, gauge pipes, or stilling wells.

9. Vacuum breakers. A vacuum breaker equalizes the pressure of the vapor space across the deck as the deck is either being landed on or floated off its legs. A typical vacuum breaker is shown in Figure 7.1-10. As depicted in this figure, the vacuum breaker consists of a well with a cover. Attached to the underside of the cover is a guided leg long enough to contact the tank bottom as the floating deck approaches. When in contact with the tank bottom, the guided leg mechanically opens the breaker by lifting the cover off the well; otherwise, the cover closes the well. The closure may be gasketed or ungasketed. Because the purpose of the vacuum breaker is to allow the free exchange of air and/or vapor, the well does not extend appreciably below the deck.

Fittings used only on internal floating roof tanks include column wells, ladder wells, and stub drains.

1. Columns and wells. The most common fixed-roof designs are normally supported from inside the tank by means of vertical columns, which necessarily penetrate an internal floating deck. (Some fixed roofs are entirely self-supporting and, therefore, have no support columns.) Column wells are similar to unslotted guide pole wells on external floating roofs. Columns are made of pipe with circular cross sections or of structural shapes with irregular cross sections (built-up). The number of columns varies with tank diameter, from a minimum of 1 to over 50 for very large diameter tanks. A typical fixed roof support column and well are shown in Figure 7.1-9.

The columns pass through deck openings via peripheral vertical wells. With noncontact decks, the well should extend down into the liquid stock. Generally, a closure device exists between the top of the well and the column. Several proprietary designs exist for this closure, including sliding covers and fabric sleeves, which must accommodate the movements of the deck relative to the column as the liquid level changes. A sliding cover rests on the upper rim of the column well (which is normally fixed to the deck) and bridges the gap or space between the column well and the column. The cover, which has a cutout, or opening, around the column slides vertically relative to the column as the deck raises and lowers. At the same time, the cover slides horizontally relative to the rim of the well. A gasket around the rim of the well reduces emissions from this fitting. A flexible fabric sleeve seal between the rim of the well and the column (with a cutout or opening, to allow vertical motion of the seal relative to the columns) similarly accommodates limited horizontal motion of the deck relative to the column.

2. Ladders and wells. Some tanks are equipped with internal ladders that extend from a manhole in the fixed roof to the tank bottom. The deck opening through which the ladder passes is constructed

with similar design details and considerations to deck openings for column wells, as previously discussed. A typical ladder well is shown in Figure 7.1-12.

3. Stub drains. Bolted internal floating roof decks are typically equipped with stub drains to allow any stored product that may be on the deck surface to drain back to the underside of the deck. The drains are attached so that they are flush with the upper deck. Stub drains are approximately 1 inch in diameter and extend down into the product on noncontact decks.

Deck seams in internal floating roof tanks are a source of emissions to the extent that these seams may not be completely vapor tight if the deck is not welded. Generally, the same loss mechanisms for fittings apply to deck seams. The predominant mechanism depends on whether or not the deck is in contact with the stored liquid. The deck seam loss equation accounts for the effects of all contributing loss mechamisms.

7.1.3 Emission Estimation Procedures

The following section presents the emission estimation procedures for fixed roof, external floating roof, domed external floating roof, and internal floating roof tanks. These procedures are valid for all petroleum liquids, pure volatile organic liquids, and chemical mixtures with similar true vapor pressures. It is important to note that in all the emission estimation procedures the physical properties of the vapor do not include the noncondensibles (e. g., air) in the gas but only refer to the condensible components of the stored liquid. To aid in the emission estimation procedures, a list of variables with their corresponding definitions was developed and is presented in Table 7.1-1.

The factors presented in AP-42 are those that are currently available and have been reviewed and approved by the U. S. Environmental Protection Agency. As storage tank equipment vendors design new floating decks and equipment, new emission factors may be developed based on that equipment. If the new emission factors are reviewed and approved, the emission factors will be added to AP-42 during the next update.

The emission estimation procedures outlined in this chapter have been used as the basis for the development of a software program to estimate emissions from storage tanks. The software program entitled "TANKS" is available through the EPA’s website at www.epa.gov/ttn/chief/software/tanks/.

7.1.3.1 Total Losses From Fixed Roof Tanks[4,8-14] –

The following equations, provided to estimate standing storage and working loss emissions, apply to tanks with vertical cylindrical shells and fixed roofs. These tanks must be substantially liquid- and vapor-tight and must operate approximately at atmospheric pressure. The equations are not intended to be used in estimating losses from unstable or boiling stocks or from mixtures of hydrocarbons or petrochemicals for which the vapor pressure is not known or cannot be readily predicted. Total losses from fixed roof tanks are equal to the sum of the standing storage loss and working loss:

$$L_T = L_S + L_W \tag{1-1}$$

where:

L_T = total losses, lb/yr
L_S = standing storage losses, lb/yr, see Equation 1-2
L_W = working losses, lb/yr, see Equation 1-29

7.1.3.1.1 Standing Storage Loss

The standing storage loss, L_S, refers to the loss of stock vapors as a result of tank vapor space breathing. Fixed roof tank standing storage losses can be estimated from Equation 1-2, which comes from the previous edition of Chapter 7 of AP-42.

$$L_S = 365\ V_V\ W_V\ K_E\ K_S \tag{1-2}$$

where:

L_S = standing storage loss, lb/yr
V_V = vapor space volume, ft^3, see Equation 1-3
W_V = stock vapor density, lb/ft^3
K_E = vapor space expansion factor, dimensionless
K_S = vented vapor saturation factor, dimensionless
365 = constant, the number of daily events in a year, $(year)^{-1}$

Tank Vapor Space Volume, V_V - The tank vapor space volume is calculated using the following equation:

$$V_V = \left(\frac{\pi}{4} D^2\right) H_{VO} \tag{1-3}$$

where:

V_V = vapor space volume, ft^3
D = tank diameter, ft, see Equation 1-13 for horizontal tanks
H_{VO} = vapor space outage, ft, see Equation 1-15

The standing storage loss equation can be simplified by combining Equation 1-2 with Equation 1-3. The result is Equation 1-4.

$$L_S = 365 K_E \left(\frac{\pi}{4} D^2 \right) H_{VO} K_S W_V \tag{1-4}$$

where:

L_S = standing storage loss, lb/yr
K_E = vapor space expansion factor, dimensionless, see Equation 1-5, 1-6, or 1-7
D = diameter, ft, see Equation 1-13 for horizontal tanks
H_{VO} = vapor space outage, ft, see Equation 1-15; use $H_E/2$ from Equation 1-14 for horizontal tanks
K_S = vented vapor saturation factor, dimensionless, see Equation 1-20
W_V = stock vapor density, lb/ft^3, see Equation 1-21
365 = constant, the number of daily events in a year, (year)$^{-1}$

Vapor Space Expansion Factor, K_E

The calculation of the vapor space expansion factor, K_E, depends upon the properties of the liquid in the tank and the breather vent settings. If the liquid stock has a true vapor pressure greater than 0.1 psia, or if the breather vent settings are higher than the typical range of ±0.03 psig, see Equation 1-7. If the liquid stored in the fixed roof tank has a true vapor pressure less than 0.1 psia and the tank breather vent settings are ±0.03 psig, use either Equation 1-5 or Equation 1-6.

If the tank location and tank color and condition are known, K_E is calculated using the following equation:

$$K_E = 0.0018 \Delta T_V = 0.0018 \; [0.72 (T_{AX} - T_{AN}) + 0.028 \alpha I] \tag{1-5}$$

where:

K_E = vapor space expansion factor, dimensionless
ΔT_V = daily vapor temperature range, °R
T_{AX} = daily maximum ambient temperature, °R
T_{AN} = daily minimum ambient temperature, °R
α = tank paint solar absorptance, dimensionless
I = daily total solar insolation on a horizontal surface, Btu/(ft^2 day)
0.0018 = constant, (°R)$^{-1}$
0.72 = constant, dimensionless
0.028 = constant, (°R ft^2 day)/Btu

If the tank location is unknown, a value of K_E can be calculated using typical meteorological conditions for the lower 48 states. The typical value for daily solar insolation is 1,370 Btu/(ft^2 day), the daily range of ambient temperature is 21°R, the daily minimum ambient temperature is 473.5 °R, and the tank paint solar absorptance is 0.17 for white paint in good condition. Substituting these values into Equation 1-5 results in a value of 0.04, as shown in Equation 1-6.

$$K_E = 0.04 \tag{1-6}$$

When the liquid stock has a true vapor pressure greater than 0.1 psia, a more accurate estimate of the vapor space expansion factor, K_E, is obtained by Equation 1-7. As shown in the equation, K_E is greater than zero. If K_E is less than zero, standing storage losses will not occur.

$$K_E = \frac{\Delta T_V}{T_{LA}} + \frac{\Delta P_V - \Delta P_B}{P_A - P_{VA}} > 0 \tag{1-7}$$

where:

ΔT_V = daily vapor temperature range, °R; see Note 1
ΔP_V = daily vapor pressure range, psi; see Note 2
ΔP_B = breather vent pressure setting range, psi; see Note 3
P_A = atmospheric pressure, psia
P_{VA} = vapor pressure at daily average liquid surface temperature, psia; see Notes 1 and 2 for Equation 1-21
T_{LA} = daily average liquid surface temperature, °R; see Note 3 for Equation 1-21

Notes:

1. The daily vapor temperature range, ΔT_V, is calculated using the following equation:

$$\Delta T_V = 0.72\ \Delta T_A + 0.028\ \alpha\ I \tag{1-8}$$

where:

ΔT_V = daily vapor temperature range, °R
ΔT_A = daily ambient temperature range, °R; see Note 4
α = tank paint solar absorptance, dimensionless; see Table 7.1-6
I = daily total solar insolation factor, Btu/ft^2 d; see Table 7.1-7

2. The daily vapor pressure range, ΔP_V, can be calculated using the following equation:

$$\Delta P_V = P_{VX} - P_{VN} \tag{1-9}$$

where:

ΔP_V = daily vapor pressure range, psia
P_{VX} = vapor pressure at the daily maximum liquid surface temperature, psia; see Note 5
P_{VN} = vapor pressure at the daily minimum liquid surface temperature, psia; see Note 5

The following method can be used as an alternate means of calculating ΔP_V for petroleum liquids:

$$\Delta P_V = \frac{0.50\, B\, P_{VA}\, \Delta T_V}{T_{LA}^{\ 2}} \tag{1-10}$$

where:

ΔP_V = daily vapor pressure range, psia
B = constant in the vapor pressure equation, °R; see Note 2 to Equation 1-21
P_{VA} = vapor pressure at the daily average liquid surface temperature, psia; see Notes 1 and 2 to Equation 1-21
T_{LA} = daily average liquid surface temperature, °R; see Note 3 to Equation 1-21
ΔT_V = daily vapor temperature range, °R; see Note 1

3. The breather vent pressure setting range, ΔP_B, is calculated using the following equation:

$$\Delta P_B = P_{BP} - P_{BV} \tag{1-11}$$

where:

ΔP_B = breather vent pressure setting range, psig
P_{BP} = breather vent pressure setting, psig
P_{BV} = breather vent vacuum setting, psig

If specific information on the breather vent pressure setting and vacuum setting is not available, assume 0.03 psig for P_{BP} and -0.03 psig for P_{BV} as typical values. If the fixed roof tank is of bolted or riveted construction in which the roof or shell plates are not vapor tight, assume that $\Delta P_B = 0$, even if a breather vent is used.

4. The daily ambient temperature range, ΔT_A, is calculated using the following equation:

$$\Delta T_A = T_{AX} - T_{AN} \tag{1-12}$$

where:

ΔT_A = daily ambient temperature range, °R
T_{AX} = daily maximum ambient temperature, °R
T_{AN} = daily minimum ambient temperature, °R

Table 7.1-7 gives values of T_{AX} and T_{AN} for selected cities in the United States.

5. The vapor pressures associated with daily maximum and minimum liquid surface temperature, P_{VX} and P_{VN}, respectively, are calculated by substituting the corresponding temperatures, T_{LX} and T_{LN}, into the vapor pressure function discussed in Notes 1 and 2 to Equation 1-21. If T_{LX} and T_{LN} are unknown, Figure 7.1-17 can be used to calculate their values.

Diameter

For vertical tanks, the diameter is straightforward. If a user needs to estimate emissions from a horizontal fixed roof tank, some of the tank parameters can be modified before using the vertical tank emission estimating equations. First, by assuming that the tank is one-half filled, the surface area of the liquid in the tank is approximately equal to the length of the tank times the diameter of the tank. Next, assume that this area represents a circle, i.e., that the liquid is an upright cylinder. Therefore, the effective diameter, D_E, is then equal to:

$$D_E = \sqrt{\frac{L\,D}{\frac{\pi}{4}}} \tag{1-13}$$

where:

D_E = effective tank diameter, ft
L = length of the horizontal tank, ft (for tanks with rounded ends, use the overall length)
D = diameter of a vertical cross-section of the horizontal tank, ft

By assuming the volume of the tank to be approximately equal to the cross-sectional area of the tank times the length of the tank, an effective height, H_E, of an equivalent upright cylinder may be calculated as:

$$H_E = \frac{\pi}{4} D \tag{1-14}$$

D_E should be used in place of D in Equation 1-4 for calculating the standing storage loss (or in Equation 1-3, if calculating the tank vapor space volume). One-half of the effective height, H_E, should be used as the vapor space outage, H_{VO}, in these equations. This method yields only a very approximate value for emissions from horizontal storage tanks. For underground horizontal tanks, assume that no breathing or standing storage losses occur ($L_S = 0$) because the insulating nature of the earth limits the diurnal temperature change. No modifications to the working loss equation are necessary for either above-ground or underground horizontal tanks.

Vapor Space Outage

The vapor space outage, H_{VO} is the height of a cylinder of tank diameter, D, whose volume is equivalent to the vapor space volume of a fixed roof tank, including the volume under the cone or dome roof. The vapor space outage, H_{VO}, is estimated from:

$$H_{VO} = H_S - H_L + H_{RO} \tag{1-15}$$

where:

H_{VO} = vapor space outage, ft; use $H_E/2$ from Equation 1-14 for horizontal tanks
H_S = tank shell height, ft
H_L = liquid height, ft
H_{RO} = roof outage, ft; see Note 1 for a cone roof or Note 2 for a dome roof

Notes:

1. For a cone roof, the roof outage, H_{RO}, is calculated as follows:

$$H_{RO} = 1/3\ H_R \tag{1-16}$$

where:

H_{RO} = roof outage (or shell height equivalent to the volume contained under the roof), ft
H_R = tank roof height, ft

$$H_R = S_R\ R_S \tag{1-17}$$

where:

S_R = tank cone roof slope, ft/ft; if unknown, a standard value of 0.0625 is used
R_S = tank shell radius, ft

2. For a dome roof, the roof outage, H_{RO}, is calculated as follows:

$$H_{RO} = H_R \left[\frac{1}{2} + \frac{1}{6} \left[\frac{H_R}{R_S} \right]^2 \right] \tag{1-18}$$

where:

H_{RO} = roof outage, ft
R_S = tank shell radius, ft
H_R = tank roof height, ft

$$H_R = R_R - \left(R_R^2 - R_S^2 \right)^{0.5} \tag{1-19}$$

H_R = tank roof height, ft
R_R = tank dome roof radius, ft
R_S = tank shell radius, ft

The value of R_R usually ranges from 0.8D - 1.2D, where D = 2 R_S. If R_R is unknown, the tank diameter is used in its place. If the tank diameter is used as the value for R_R, Equations 1-18 and 1-19 reduce to H_{RO} = 0.137 R_S and H_R = 0.268 R_S.

Vented Vapor Saturation Factor, K_S

The vented vapor saturation factor, K_S, is calculated using the following equation:

$$K_S = \frac{1}{1 + 0.053\, P_{VA}\, H_{VO}} \tag{1-20}$$

where:

K_S = vented vapor saturation factor, dimensionless
P_{VA} = vapor pressure at daily average liquid surface temperature, psia; see Notes 1 and 2 to Equation 1-21
H_{VO} = vapor space outage, ft, see Equation 1-15
0.053 = constant, $(\text{psia-ft})^{-1}$

Stock Vapor Density, W_V - The density of the vapor is calculated using the following equation:

$$W_V = \frac{M_V \ P_{VA}}{R \ T_{LA}} \tag{1-21}$$

where:

W_V = vapor density, lb/ft^3
M_V = vapor molecular weight, lb/lb-mole; see Note 1
R = the ideal gas constant, 10.731 psia ft^3/lb-mole °R
P_{VA} = vapor pressure at daily average liquid surface temperature, psia; see Notes 1 and 2
T_{LA} = daily average liquid surface temperature, °R; see Note 3

Notes:

1. The molecular weight of the vapor, M_V, can be determined from Table 7.1-2 and 7.1-3 for selected petroleum liquids and volatile organic liquids, respectively, or by analyzing vapor samples. Where mixtures of organic liquids are stored in a tank, M_V can be calculated from the liquid composition. The molecular weight of the vapor, M_V, is equal to the sum of the molecular weight, M_i, multiplied by the vapor mole fraction, y_i, for each component. The vapor mole fraction is equal to the partial pressure of component i divided by the total vapor pressure. The partial pressure of component i is equal to the true vapor pressure of component i (P) multiplied by the liquid mole fraction, (x_i). Therefore,

$$M_V = \sum M_i \ y_i = \sum M_i \left(\frac{P x_i}{P_{VA}} \right) \tag{1-22}$$

where:

P_{VA}, total vapor pressure of the stored liquid, by Raoult's Law, is:

$$P_{VA} = \sum P x_i \tag{1-23}$$

For more detailed information, please refer to Section 7.1.4.

2. True vapor pressure is the equilibrium partial pressure exerted by a volatile organic liquid, as defined by ASTM-D 2879 or as obtained from standard reference texts. Reid vapor pressure is the absolute vapor pressure of volatile crude oil and volatile nonviscous petroleum liquids, except liquified petroleum gases, as determined by ASTM-D-323. True vapor pressures for organic liquids can be determined from Table 7.1-3. True vapor pressure can be determined for crude oils using Figures 7.1-13a and 7.1-13b. For refined stocks (gasolines and naphthas), Table 7.1-2 or Figures 7.1-14a and 7.1-14b can be used. In order to use Figures 7.1-13a, 7.1-13b, 7.1-14a, or 7.1-14b, the stored liquid surface temperature, T_{LA}, must be determined in degrees Fahrenheit. See Note 3 to determine T_{LA}.

Alternatively, true vapor pressure for selected petroleum liquid stocks, at the stored liquid surface temperature, can be determined using the following equation:

$$P_{VA} = \exp\left[A - \left(\frac{B}{T_{LA}}\right)\right] \quad (1\text{-}24)$$

where:

exp = exponential function
A = constant in the vapor pressure equation, dimensionless
B = constant in the vapor pressure equation, °R
T_{LA} = daily average liquid surface temperature, °R
P_{VA} = true vapor pressure, psia

For selected petroleum liquid stocks, physical property data are presented in Table 7.1-2. For refined petroleum stocks, the constants A and B can be calculated from the equations presented in Figure 7.1-15 and the distillation slopes presented in Table 7.1-4. For crude oil stocks, the constants A and B can be calculated from the equations presented in Figure 7.1-16. Note that in Equation 1-24, T_{LA} is determined in degrees Rankine instead of degrees Fahrenheit.

The true vapor pressure of organic liquids at the stored liquid temperature can be estimated by Antoine's equation:

$$\log P_{VA} = A - \left(\frac{B}{T_{LA} + C}\right) \quad (1\text{-}25)$$

where:

A = constant in vapor pressure equation
B = constant in vapor pressure equation
C = constant in vapor pressure equation
T_{LA} = daily average liquid surface temperature, °C
P_{VA} = vapor pressure at average liquid surface temperature, mm Hg

For organic liquids, the values for the constants A, B, and C are listed in Table 7.1-5. Note that in Equation 1-25, T_{LA} is determined in degrees Celsius instead of degrees Rankine. Also, in Equation 1-25, P_{VA} is determined in mm of Hg rather than psia (760 mm Hg = 14.7 psia).

3. If the daily average liquid surface temperature, T_{LA}, is unknown, it is calculated using the following equation:

$$T_{LA} = 0.44T_{AA} + 0.56T_B + 0.0079\ \alpha\ I \quad (1\text{-}26)$$

where:

T_{LA} = daily average liquid surface temperature, °R
T_{AA} = daily average ambient temperature, °R; see Note 4
T_B = liquid bulk temperature, °R; see Note 5
α = tank paint solar absorptance, dimensionless; see Table 7.1-6
I = daily total solar insolation factor, Btu/(ft^2 day); see Table 7.1-7

If T_{LA} is used to calculate P_{VA} from Figures 7.1-13a, 7.1-13b, 7.1-14a, or 7.1-14b, T_{LA} must be converted from degrees Rankine to degrees Fahrenheit (°F = °R - 460). If T_{LA} is used to calculate P_{VA} from Equation 1-25, T_{LA} must be converted from degrees Rankine to degrees Celsius (°C = [°R - 492]/1.8). Equation 1-26 should not be used to estimate liquid surface temperature from insulated tanks.

In the case of insulated tanks, the average liquid surface temperature should be based on liquid surface temperature measurements from the tank.

4. The daily average ambient temperature, T_{AA}, is calculated using the following equation:

$$T_{AA} = \left(\frac{T_{AX} + T_{AN}}{2} \right) \tag{1-27}$$

where:

T_{AA} = daily average ambient temperature, °R
T_{AX} = daily maximum ambient temperature, °R
T_{AN} = daily minimum ambient temperature, °R

Table 7.1-7 gives values of T_{AX} and T_{AN} for selected U.S. cities.

5. The liquid bulk temperature, T_B, is calculated using the following equation:

$$T_B = T_{AA} + 6\alpha - 1 \tag{1-28}$$

where:

T_B = liquid bulk temperature, °R
T_{AA} = daily average ambient temperature, °R, as calculated in Note 4
α = tank paint solar absorptance, dimensionless; see Table 7.1-6.

7.1.3.1.2 Working Loss

The working loss, L_W, refers to the loss of stock vapors as a result of tank filling or emptying operations. Fixed roof tank working losses can be estimated from:

$$L_W = 0.0010\, M_V\, P_{VA}\, Q\, K_N\, K_P \tag{1-29}$$

where:

L_W = working loss, lb/yr
M_V = vapor molecular weight, lb/lb-mole; see Note 1 to Equation 1-21
P_{VA} = vapor pressure at daily average liquid surface temperature, psia; see Notes 1 and 2 to Equation 1-21
Q = annual net throughput (tank capacity [bbl] times annual turnover rate), bbl/yr
K_N = working loss turnover (saturation) factor, dimensionless; see Figure 7.1-18
for turnovers >36, $K_N = (180 + N)/6N$
for turnovers ≤36, $K_N = 1$

N = number of turnovers per year, dimensionless

$$N = \frac{5.614\, Q}{V_{LX}} \tag{1-30}$$

where:

V_{LX} = tank maximum liquid volume, ft^3

$$V_{LX} = \frac{\pi}{4} D^2 \; H_{LX} \tag{1-31}$$

where:

D = diameter, ft
H_{LX} = maximum liquid height, ft
K_P = working loss product factor, dimensionless
for crude oils $K_P = 0.75$
for all other organic liquids, $K_P = 1$

Using the following steps, Equation 1-29 can be simplified to combine all variables into one equation.

Using Equation 1-21, the term "$M_V P_{VA}$" can be replaced with Equation 1-32.

$$M_V \; P_{VA} = W_V \; R \; T_{LA} \tag{1-32}$$

Using a combination of Equation 1-30 and Equation 1-31, the term "Q" can be replaced with Equation 1-33.

$$Q = \frac{N \; H_{LX}}{5.614} \left(\frac{\pi}{4} \right) D^2 \tag{1-33}$$

Assuming a standard value of R to be 10.731 ft^3 psia/(lb-mole °R), the result is Equation 1-34.

$$L_W = \left(\frac{0.0010}{5.614} \right) (10.731) \; T_{LA} \; N \; H_{LX} \left(\frac{\pi}{4} \right) D^2 \; K_N \; K_P \; W_V \tag{1-34}$$

By assuming the temperature to be 60°F (520°R), and adding the vent setting correction factor, K_B, the result is Equation 1-35. The vent setting correction factor accounts for any reduction in emissions due to the condensation of vapors prior to the opening of the vent. This correction factor will only affect the calculation if the vent settings are greater than ±0.03 psig.

$$L_W = N\ H_{LX} \left(\frac{\pi}{4}\right) D^2\ K_N\ K_P\ W_V\ K_B \tag{1-35}$$

where:

L_W = working loss, lb/yr
N = number of turnovers per year, $(\text{year})^{-1}$
H_{LX} = maximum liquid height, ft
D = diameter, ft
K_N = working loss turnover (saturation) factor, dimensionless; see Figure 7.1-18
for turnovers > 36, $K_N = (180 + N)/6N$
for turnovers ≤ 36, $K_N = 1$
K_P = working loss product factor, dimensionless
for crude oils $K_P = 0.75$
for all other organic liquids, $K_P = 1$
W_V = vapor density, lb/ft^3, see Equation 1-21
K_B = vent setting correction factor, dimensionless
for open vents and for a vent setting range up to ± 0.03 psig, $K_B = 1$

Vent Setting Correction Factor

When the breather vent settings are greater than the typical values of ± 0.03 psig, and the condition expressed in Equation 1-36 is met, a vent setting correction factor, K_B, must be determined using Equation 1-37. This value of K_B will be used in Equation 1-35 to calculate working losses.

When:

$$K_N \left[\frac{P_{BP} + P_A}{P_I + P_A}\right] > 1.0 \tag{1-36}$$

Then:

$$K_B = \left[\frac{\frac{P_I + P_A}{K_N} - P_{VA}}{P_{BP} + P_A - P_{VA}} \right] \tag{1-37}$$

where:

K_B = vent setting correction factor, dimensionless

P_I = pressure of the vapor space at normal operating conditions, psig
P_I is an actual pressure reading (the gauge pressure). If the tank is held at atmospheric pressure (not under a vacuum or held at a steady pressure) P_I would be 0.

P_A = atmospheric pressure, psia

K_N = working loss turnover (saturation) factor (dimensionless)
for turnovers > 36, $K_N = (180 + N)/6N$
for turnovers ≤ 36, $K_N = 1$

P_{VA} = vapor pressure at the daily average liquid surface temperature, psia; see Notes 1 and 2 to Equation 1-21

P_{BP} = breather vent pressure setting, psig.

7.1.3.2 Total Losses From Floating Roof Tanks[3-5,13,15-17] –

Total floating roof tank emissions are the sum of rim seal, withdrawal, deck fitting, and deck seam losses. The equations presented in this subsection apply only to floating roof tanks. The equations are not intended to be used in the following applications:

1. To estimate losses from unstable or boiling stocks or from mixtures of hydrocarbons or petrochemicals for which the vapor pressure is not known or cannot readily be predicted;

2. To estimate losses from closed internal or closed domed external floating roof tanks (tanks vented only through a pressure/vacuum vent); or

3. To estimate losses from tanks in which the materials used in the rim seal and/or deck fittings are either deteriorated or significantly permeated by the stored liquid.

This section contains equations for estimating emissions from floating roof tanks in two situations: during normal operation, and during roof landings.

7.1.3.2.1 Normal Operation

Total losses from floating roof tanks may be written as:

$$L_T = L_R + L_{WD} + L_F + L_D \quad (2\text{-}1)$$

where:

L_T = total loss, lb/yr
L_R = rim seal loss, lb/yr; see Equation 2-2
L_{WD} = withdrawal loss, lb/yr; see Equation 2-4
L_F = deck fitting loss, lb/yr; see Equation 2-5
L_D = deck seam loss (internal floating roof tanks only), lb/yr; see Equation 2-9

Loss factors may be estimated for deck fitting configurations that are not listed in Table 1-12, at the zero miles-per-hour wind speed condition (IFRTs and CFRTs), from the following equation:

$$K_{fai} = 0.27(A_{fi})^{0.86}$$

Where:

K_{fai} = zero-wind-speed loss factor for a particular type of deck fitting, in pound-moles per year.
A_{fi} = liquid surface area within a particular type of deck fitting, in square inches. The liquid surface area is the area inside the deck fitting well or leg sleeve, less any area occupied by an obstruction in the deck fitting well or leg sleeve (such as a fixed-roof support column, unslotted guidepole, guidepole float, or deck support leg).

The coefficient, 0.27, has units of pound-moles per (square inches)$^{0.86}$-year, and the exponent, 0.86, is dimensionless.

This equation is only applicable when the distance from the liquid surface to the top of the deck fitting well or leg sleeve is 12 inches or greater. Shorter deck fitting wells or leg sleeves may result in higher loss rates. There are no similar algorithms available for estimating loss factors for shorter deck fitting wells or leg sleeves.

This equation is for an uncontrolled deck fitting. Effective deck fitting controls would be expected to result in lower loss factors than would be estimated by this equation, but there are no algorithms available for estimating the effectiveness of deck fitting controls.

This equation is for the zero miles-per-hour wind speed condition. There are no algorithms available for estimating loss factors at non-zero wind speeds (EFRTs).

Rim Seal Loss - Rim seal loss from floating roof tanks can be estimated using the following equation:

$$L_R = (K_{Ra} + K_{Rb}\, v^n) D P^* M_V K_C \qquad (2\text{-}2)$$

where:

L_R = rim seal loss, lb/yr
K_{Ra} = zero wind speed rim seal loss factor, lb-mole/ft·yr; see Table 7.1-8
K_{Rb} = wind speed dependent rim seal loss factor, lb-mole/(mph)^{n}ft·yr; see Table 7.1-8
v = average ambient wind speed at tank site, mph; see Note 1
n = seal-related wind speed exponent, dimensionless; see Table 7.1-8
P^* = vapor pressure function, dimensionless; see Note 2

$$P^* = \frac{\dfrac{P_{VA}}{P_A}}{\left[1 + \left(1 - \dfrac{P_{VA}}{P_A}\right)^{0.5}\right]^2} \qquad (2\text{-}3)$$

where:

P_{VA} = vapor pressure at daily average liquid surface temperature, psia;

See Notes 1 and 2 to Equation 1-21 and Note 3 below

P_A = atmospheric pressure, psia

D = tank diameter, ft
M_V = average vapor molecular weight, lb/lb-mole; see Note 1 to Equation 1-21,
K_C = product factor;
K_C = 0.4 for crude oils;
K_C = 1 for all other organic liquids.

Notes:

1. If the ambient wind speed at the tank site is not available, use wind speed data from the nearest local weather station or values from Table 7.1-9. If the tank is an internal or domed external floating roof tank, the value of v is zero.

2. P^* can be calculated or read directly from Figure 7.1-19.

3. The API recommends using the stock liquid temperature to calculate P_{VA} for use in Equation 2-3 in lieu of the liquid surface temperature. If the stock liquid temperature is unknown, API recommends the following equations to estimate the stock temperature:

Tank Color		**Average Annual Stock Temperature, T_s (°F)**
White		$T_{AA} + 0^a$
Aluminum		$T_{AA} + 2.5$
Gray		$T_{AA} + 3.5$
Black		$T_{AA} + 5.0$

[a]T_{AA} is the average annual ambient temperature in degrees Fahrenheit.

Withdrawal Loss - The withdrawal loss from floating roof storage tanks can be estimated using Equation 2-4.

$$L_{WD} = \frac{(0.943)QC_S W_L}{D}\left[1 + \frac{N_C F_C}{D}\right] \quad (2\text{-}4)$$

where:

L_{WD} = withdrawal loss, lb/yr
Q = annual throughput (tank capacity [bbl] times annual turnover rate), bbl/yr
C_S = shell clingage factor, bbl/1,000 ft^2; see Table 7.1-10
W_L = average organic liquid density, lb/gal; see Note 1
D = tank diameter, ft
0.943 = constant, 1,000 $ft^3 \cdot gal/bbl^2$
N_C = number of fixed roof support columns, dimensionless; see Note 2
F_C = effective column diameter, ft (column perimeter [ft]/π); see Note 3

Notes:

1. A listing of the average organic liquid density for select petrochemicals is provided in Tables 7.1-2 and 7.1-3. If W_L is not known for gasoline, an average value of 6.1 lb/gal can be assumed.

2. For a self-supporting fixed roof or an external floating roof tank:

$N_C = 0$.

For a column-supported fixed roof:

N_C = use tank-specific information or see Table 7.1-11.

3. Use tank-specific effective column diameter or

F_C = 1.1 for 9-inch by 7-inch built-up columns, 0.7 for 8-inch-diameter pipe columns, and 1.0 if column construction details are not known

Deck Fitting Loss - Deck fitting losses from floating roof tanks can be estimated by the following equation:

$$L_F = F_F P^* M_V K_C \tag{2-5}$$

where:

L_F = the deck fitting loss, lb/yr
F_F = total deck fitting loss factor, lb-mole/yr

$$F_F = [(N_{F_1} K_{F_1}) + (N_{F_2} K_{F_2}) + \ldots + (N_{F_{nf}} K_{F_{nf}})] \tag{2-6}$$

where:

N_{F_i} = number of deck fittings of a particular type ($i = 0,1,2,\ldots,n_f$), dimensionless
K_{F_i} = deck fitting loss factor for a particular type fitting ($i = 0,1,2,\ldots,n_f$), lb-mole/yr; see Equation 2-7
n_f = total number of different types of fittings, dimensionless
P^*, M_V, K_C are as defined for Equation 2-2.

The value of F_F may be calculated by using actual tank-specific data for the number of each fitting type (N_F) and then multiplying by the fitting loss factor for each fitting (K_F).

The deck fitting loss factor, K_{F_i} for a particular type of fitting, can be estimated by the following equation:

$$K_{F_i} = K_{Fa_i} + K_{Fb_i} (K_v v)^{m_i} \tag{2-7}$$

where:

K_{F_i} = loss factor for a particular type of deck fitting, lb-mole/yr
K_{Fa_i} = zero wind speed loss factor for a particular type of fitting, lb-mole/yr
K_{Fb_i} = wind speed dependent loss factor for a particular type of fitting, lb-mole/(mph)^m·yr
m_i = loss factor for a particular type of deck fitting, dimensionless
i = 1, 2, ..., n, dimensionless
K_v = fitting wind speed correction factor, dimensionless; see below
v = average ambient wind speed, mph

For external floating roof tanks, the fitting wind speed correction factor, K_v, is equal to 0.7. For internal and domed external floating roof tanks, the value of v in Equation 2-7 is zero and the equation becomes:

$$K_{Fi} = K_{Fai} \tag{2-8}$$

Loss factors K_{Fa}, K_{Fb}, and m are provided in Table 7.1-12 for the most common deck fittings used on floating roof tanks. These factors apply only to typical deck fitting conditions and when the average ambient wind speed is below 15 miles per hour. Typical numbers of deck fittings for floating roof tanks are presented in Tables 7.1-11, 7.1-12, 7.1-13, 7.1-14, and 7.1-15.

Deck Seam Loss - Neither welded deck internal floating roof tanks nor external floating roof tanks have deck seam losses. Internal floating roof tanks with bolted decks may have deck seam losses. Deck seam loss can be estimated by the following equation:

$$L_D = K_D S_D D^2 P^* M_V K_C \tag{2-9}$$

where:

K_D = deck seam loss per unit seam length factor, lb-mole/ft-yr
= 0.0 for welded deck
= 0.14 for bolted deck; see Note

S_D = deck seam length factor, ft/ft^2

$$= \frac{L_{seam}}{A_{deck}}$$

where:

L_{seam} = total length of deck seams, ft

A_{deck} = area of deck, ft^2 = $\frac{\pi \cdot D^2}{4}$

D, P^*, M_V, and K_C are as defined for Equation 2-2.

If the total length of the deck seam is not known, Table 7.1-16 can be used to determine S_D. For a deck constructed from continuous metal sheets with a 7-ft spacing between the seams, a value of 0.14 ft/ft^2 can be used. A value of 0.33 ft/ft^2 can be used for S_D when a deck is constructed from rectangular panels 5 ft by 7.5 ft. Where tank-specific data concerning width of deck sheets or size of deck panels are unavailable, a default value for S_D can be assigned. A value of 0.20 ft/ft^2 can be assumed to represent the most common bolted decks currently in use.

Note: Recently vendors of bolted decks have been using various techniques, such as gasketing the deck seams, in an effort to reduce deck seam losses. However, emission factors are not currently available in AP-42 that represent the emission reduction, if any, achieved by these techniques. Some vendors have developed specific factors for their deck designs; however, use of these factors is not recommended until approval has been obtained from the governing regulatory agency or permitting authority.

7.1.3.2.2 Roof Landings[21]

When using floating roof tanks, the roof floats on the surface of the liquid inside the tank and reduces evaporative losses during normal operation. However, when the tank is emptied to the point that the roof lands on deck legs, there is a period where the roof is not floating and other mechanisms must be used to estimate emissions. These emissions continue until the tank is refilled to a sufficient level to again float the roof. Therefore, these emission estimate calculations are applicable each time there is a landing of the floating roof.

This model does not address standing idle losses for partial days. It would be conservative (i.e., potentially overestimate emissions) to apply the model to episodes during which the floating roof remains landed for less than a day.

The total loss from floating roof tanks during a roof landing is the sum of the standing idle losses and the filling losses. This relationship may be written in the form of an equation:

$$L_{TL} = L_{SL} + L_{FL} \tag{2-10}$$

where:

L_{TL} = total losses during roof landing, lb per landing episode
L_{SL} = standing idle losses during roof landing, lb per landing episode
L_{FL} = filling losses during roof landing, lb per landing episode

The group of applicable equations to estimate the landing losses differs according to the type of floating roof tank that is being used. The equations needed to estimate landing losses from internal floating roof tanks are contained in Table 7.1-17; equations for external floating roof tanks are contained in Table 7.1-18; and equations for drain-dry floating roof tanks are contained in Table 7.1-19. The following sections explain these equations in more detail.

7.1.3.2.2.1 Standing Idle Losses

After the floating roof is landed and the liquid level in the tank continues to drop, a vacuum is created which could cause the floating roof to collapse. To prevent damage and to equalize the pressure, a breather vent is actuated. Then, a vapor space is formed between the floating roof and the liquid. The breather vent remains open until the roof is again floated, so whenever the roof is landed, vapor can be lost through this vent. These losses are called “standing idle losses.”

The three different mechanisms that contribute to standing idle losses are (1) breathing losses from vapor space, (2) wind losses, and (3) clingage losses. The specific loss mechanism is dependent on the type of floating roof tank.

For internal floating roof tanks with nominally flat bottoms (including those built with a slight upward cone), the breathing losses originate from a discernible level of liquid that remains in the tank at all times due to the flatness of the tank bottom and the position of the withdrawal line (a liquid “heel”). The liquid evaporates into the vapor space and daily changes in ambient temperature cause the tank to breathe in a manner similar to a fixed roof tank.

For external floating roof tanks, which are not shielded from the surrounding atmosphere, the wind can cause vapors to flow from beneath the floating roof. The higher the wind speeds, the more vapor that can be expelled. These are known as wind losses.

For tanks with a cone-down or shovel bottom, the floor of the tank is sloped to allow for more thorough emptying of the tank contents, therefore, the amount of liquid differs significantly from tanks with flat bottoms (see Figure 7.1-20). When the emptying operation drains the tank bottom, but leaves a heel of liquid in or near the sump, the tank is considered to have a partial heel. A drain-dry condition is attained only when all of the standing liquid has been removed, including from the bottom of the sump. However, due to sludge buildup and roughness of the inside of the tank, a small layer of liquid can remain clinging to the sloped bottom of a drain-dry tank. This layer of liquid will create vapor that can result in clingage losses. The amount of vapor produced within a drain-dry tank is directly related to this clingage. Clingage factors for various tank conditions are contained in Table 7.1-10.

Standing Idle Loss for Tanks with a Liquid Heel

A constraint on the standing idle loss is added for floating roof tanks with a liquid heel in that the total emissions cannot exceed the available stock liquid in the tank. This upper limit, represented as L_{SLmax}, is a function of the volume and density of the liquid inside the tank.

$$L_{SL\,\max} = \text{(area of tank) (height of liquid) (density of liquid)} \tag{2-11}$$

Assuming that the tank has a circular bottom and adding a volume conversion unit, the equation can be simplified to Equation 2-12 and Equation 2-13.

$$L_{SL\,\max} = \left(\frac{\pi}{4}\right) D^2\ h_{le}\ W_l\ (7.48) \tag{2-12}$$

$$L_{SL\,\max} = 5.9\ D^2\ h_{le}\ W_l \tag{2-13}$$

where:

L_{SLmax} = limit on standing idle loss, lb per landing episode
7.48 = volume conversion factor, gal/ft^3
D = diameter of the tank, feet
h_{le} = effective height of the stock liquid, feet
W_l = density of the liquid inside the tank, lb/gal

Internal Floating Roof Tank with a Liquid Heel

For internal floating roof tanks with liquid heels, the amount of "standing idle loss" depends on the amount of vapor within the vapor space under the floating roof. Essentially, the mechanism is identical to the breathing losses experienced with fixed roof tanks. The mechanism shown in Equation 2-14 is identical to Equation 1-2.

$$L_{SL} = 365\, V_V\ W_V\ K_E\ K_S \tag{2-14}$$

where

L_{SL} = annual breathing loss from standing storage during roof landing, lb/yr
365 = number of days in a year, days/yr
V_V = volume of the vapor space, ft^3
W_V = stock vapor density, lb/ft^3

$$W_V = \frac{M_V P}{RT} \tag{2-15}$$

M_V = stock vapor molecular weight, lb/lb-mole
P = true vapor pressure of the stock liquid, psia
R = ideal gas constant, 10.731 (psia-ft^3)/(lb-mole °R)
T = temperature, °R
K_E = vapor space expansion factor, dimensionless
K_S = saturation factor, dimensionless.

Assuming that n_d equals the number of days that the tank stands idle and substituting for the stock vapor density according to Equation 2-15, the equation is further simplified to Equation 2-16.

$$L_{SL} = n_d\ K_E \left(\frac{P\,V_V}{R\,T}\right) M_V\ K_S \tag{2-16}$$

The term with the highest amount of uncertainty is the saturation of the vapor within the tank. The factor, K_S, is estimated with the same method used to calculate the saturation factor for fixed roof tanks in Equation 1-20. In order to establish limits on the value of K_S, the estimated factor is assumed to be less than or equal to the saturation factor during filling (S). (For more information see Filling Losses.)

External Floating Roof Tank with a Liquid Heel

For external floating roof tanks with a liquid heel, wind affects emission releases from the tanks. As a starting point, begin with a basic equation based on rim-seal loss. The equation, shown as Equation 2-17, is equivalent to Equation 2-2.

$$L_{RL} = (K_{Ra} + K_{Rb}\, v^n) D\, P^*\, M_V\, K_C \qquad (2\text{-}17)$$

where

L_{RL} = annual rim seal loss during roof landing, lb/yr
K_{Ra} = zero wind speed rim seal loss factor, lb-mole/ft-yr
K_{Rb} = wind speed dependent rim seal loss factor, lb-mole/((mph)^n-ft-yr))
n = seal-related wind speed loss exponent, dimensionless
(K_{Ra}, K_{Rb}, and n are specific to a given configuration of rim seal)
v = average ambient wind speed, mph
D = tank diameter, ft
M_V = stock vapor molecular weight, lb/lb-mole
K_C = product factor, dimensionless
P^* = a vapor pressure function, dimensionless

$$P^* = \frac{\dfrac{P_{VA}}{P_A}}{\left[1 + \left(1 - \dfrac{P_{VA}}{P_A}\right)^{0.5}\right]^2} \qquad (2\text{-}18)$$

where:

P_A = atmospheric pressure, psia
P = true vapor pressure of the stock liquid, psia.

Assuming that the stock properties included in the vapor pressure function will adequately account for differences in liquid product type, K_C is assumed to equal 1. Regardless of the type of rim seal that is in use, it is effectively rendered a 'vapor-mounted' seal when the liquid level falls such that the rim seal is no longer in contact with the liquid. The contribution of a secondary seal is neglected in that it is offset by emissions through the deck fittings. The emissions are therefore based on the case of a welded tank with an average-fitting vapor-mounted primary seal. According to Table 7.1-8, the values of K_{ra}, K_{rb}, and n are 6.7, 0.2, and 3.0, respectively. The variables were substituted and the equation was converted from annual emissions to daily emissions by dividing the equation by 365. A value of 10 mph is assigned to the wind speed, so that estimated standing idle losses from an external floating roof tank will not be less than for a typical internal floating roof tank. Lower values for the rim seal loss factors or the wind speed should not be used. The equation can be simplified for daily emissions to Equation 2-19.

$$L_{SLwind} = 0.57\, n_d\, D\, P^*\, M_V \qquad (2\text{-}19)$$

where:

L_{SLwind} = daily standing idle loss due to wind, lb per day
nd = number of days that the tank is standing idle, days
D = tank diameter, ft
P* = a vapor pressure function, dimensionless
M_V = stock vapor molecular weight, lb/lb-mole

After the wind empties the vapor space above the remaining liquid heel, the liquid will continue to produce vapor. Thus, this standing idle loss will occur every day that the tank stands idle. This equation is adequate at this time, but could be revised as additional testing is conducted and studied.

Standing Idle Losses from Drain-Dry Tanks

When a drain-dry tank has been emptied, the only stock liquid available inside the tank is a small amount that clings to the wetted surface of the tank interior (if a heel of liquid remains in or near a sump, then the tank should be evaluated as having a partial heel, and not as drain dry – see Figure 7.1-20). The slope prevents a significant amount of stock liquid from remaining in the tank so that evaporation is much lower than from tanks with liquid heels. Due to the limited amount of liquid clinging to the interior of the tank, as shown in Figure 7.1-20, it is assumed that vapors would not be replenished as readily as in tanks with a liquid heel. For this model, standing idle loss due to clingage is a one-time event rather than a daily event.

The loss due to clingage is proportional to a clingage factor, which varies with the condition of the inside of the tank. A list of clingage factors are shown in Table 7.1-10. The factors are given in terms of barrels per thousand square feet. To convert the loss to pounds, the density of the liquid and the area of the tank must be taken into account, as shown in Equation 2-20.

$$L_C = 42\, C_S\, W_l \left(Area\right) \tag{2-20}$$

where:

L_C = clingage loss from the drain-dry tank, lb
42 = conversion factor, gal/bbl
C_S = clingage factor, bbl/1,000 ft^2
W_l = density of the liquid, lb/gal
Area = area of the tank bottom, ft^2

$$Area = \left(\frac{\pi\, D^2}{4}\right) \tag{2-21}$$

Among the conditions shown in Table 7.1-10, the one that best approximates a sludge-lined tank bottom is gunite-lined. Assuming that gasoline is being stored in the tank, a clingage factor of 0.15 and the area term in Equation 2-21 were substituted into Equation 2-20, which simplifies to Equation 2-22.

$$L_{SL} = 0.0063\, W_l\, \frac{\pi\, D^2}{4} \tag{2-22}$$

The clingage loss should be constrained by an upper limit equal to the filling loss for an internal floating roof tank with a liquid heel. This is demonstrated in Equation 2-23.

$$L_{SL\,\max} = 0.60\left(\frac{P\,V_V}{R\,T}\right) M_V \qquad (2\text{-}23)$$

where:

L_{SLmax} = maximum standing idle loss for drain-dry tanks due to clingage, lb
W_l = density of the liquid inside the tank, lb/gal
D = diameter of the tank, feet
P = true vapor pressure of the liquid inside the tank, psia
V_V = volume of the vapor space, ft^3
R = ideal gas constant, 10.731 psia ft^3 /lb-mole °R
T = average temperature of the vapor and liquid below the floating roof, °R (= T_{AA})
M_V = stock vapor molecular weight, lb/lb-mole

Therefore, the standing idle loss for drain-dry tanks, shown in Equation 2-22, must be less than or equal to Equation 2-23. This relationship is shown by Equation 2-24.

$$L_{SL} \le 0.60\left(\frac{P\,V_V}{R\,T}\right) M_V \qquad (2\text{-}24)$$

7.1.3.2.2.2 Filling Losses

When a floating roof tank is refilled, there are additional emissions resulting from the roof being landed. These losses are called "filling losses" and continue until the liquid reaches the level of the floating roof.

The first contributor to filling losses is called the "arrival" component. As liquid flows into the tank, the vapor space between the liquid and the floating roof is decreased. The displaced vapors are expelled through the breather vent. Once the roof is refloated on the liquid surface, the breather vent closes.

The second contributor to filling losses is called the "generated" component. As the incoming liquid evaporates, additional vapors will be formed in the vapor space and will also be expelled through the breather vent.

<u>Internal Floating Roof Tank with a Liquid Heel</u>

For internal floating roof tanks with a liquid heel, the amount of vapor that is lost during filling is directly related to the amount of vapor space and the saturation level of the vapor within the vapor space, as shown in Equation 2-25.

$$L_{FL} = (vol\ of\ vapor\ space)(density\ of\ vapor)(mol\ wt\ of\ vapor)(satfactor) \qquad (2\text{-}25)$$

After substituting for the major terms in Equation 2-25, the equation can be simplified to Equation 2-26.

$$L_{FL} = \left(\frac{P\,V_V}{R\,T} \right) M_V\ S \tag{2-26}$$

where:

L_{FL} = filling loss during roof landing, lb
P = true vapor pressure of the liquid within the tank, psia
V_V = volume of the vapor space, ft^3
R = ideal gas constant, 10.731 psia-ft^3/(lb-mole-°R)
T = average temperature of the vapor and liquid below the floating roof, °R
M_V = stock vapor molecular weight, lb/lb-mole
S = filling saturation factor, dimension less (0.60 for a full liquid heel; 0.50 for a partial liquid heel).

This equation accounts for the arrival losses and the generated losses. The main concern with this equation is the estimation of the saturation factor. All other components are based on the ideal gas laws. For consistency, an accepted value of 0.6, which is used elsewhere in Chapter 7, will be used for the case of a full liquid heel. A value of 0.5 has been demonstrated for the case of a partial liquid heel.

External Floating Roof Tank with a Liquid Heel

For external floating roof tanks with a liquid heel, the amount of vapor lost during filling will be less than the amount for internal floating roof tanks because of wind effects. The "arrival" component will be partially flushed out of the tank by the wind, so the preceding equation requires the addition of a correction factor, C_{sf} to the saturation factor as shown in Equation 2-27.

$$L_{FL} = \left(\frac{P\,V_V}{R\,T} \right) M_V\ \left(C_{sf}\ S \right) \tag{2-27}$$

The basic premise of the correction factor is that the vapors expelled by wind action will not be present in the vapor space when the tank is refilled, so the amount of saturation is lowered. This is demonstrated in Equation 2-28.

$$C_{sf} = 1 - \frac{\left(one\ day\ of\ wind\ driven\ standing\ idle\ loss \right) - \left(one\ day\ without\ wind\ standing\ idle\ loss \right)}{one\ day\ without\ wind\ total\ loss} \tag{2-28}$$

The equation for the saturation factor can be simplified based on other equations contained in this section as shown in Equation 2-29 and Equation 2-30.

$$C_{sf} = 1 - \left(\frac{(Equation\ 2-19) - (Equation\ 2-16)}{(Equation\ 2-16) + (Equation\ 2-26)} \right) \tag{2-29}$$

$$C_{sf} = 1 - \left(\frac{\left(0.57\, n_d\ D\, P^*\ M_V\right) - \left(n_d\ K_E \left(\frac{P\, V_V}{R\, T}\right) M_V\ K_S\right)}{\left(n_d\ K_E \left(\frac{P\, V_V}{R\, T}\right) M_V\ K_S\right) + \left(M_V\ S \left(\frac{P\, V_V}{R\, T}\right)\right)} \right) \tag{2-30}$$

where:

C_{sf} = filling saturation correction factor, dimensionless
n_d = number of days the tank stands idle with the floating roof landed, dimensionless
K_E = vapor space expansion factor, dimensionless

$$K_E = \frac{\Delta T_V}{T} \left(1 + \frac{0.50\ B\ P}{T\left(P_A - P\right)} \right) \tag{2-31}$$

ΔT_v = daily vapor temperature range, °R
T = average temperature of the vapor and liquid below the floating roof, °R
B = constant from the vapor pressure equation shown in Equation 1-24, °R (If B is unknown, K_E may be calculated from Equation 1-5, 1-6, or 1-7, as appropriate, with the value of ΔP_B set equal to zero.)
P = true vapor pressure of the stock liquid, psia
P_A = atmospheric pressure at the tank location, psia
V_V = volume of the vapor space, ft^3

$$V_V = \frac{h_v\ \pi\ D^2}{4} \tag{2-32}$$

h_v = height of the vapor space under the floating roof, ft
D = tank diameter, ft
R = ideal gas constant, 10.731 psia ft^3 / lb-mole R
M_V = stock vapor molecular weight, lb/lb-mole
K_S = standing idle saturation factor, dimensionless
S = filling saturation factor, dimensionless
P^* = vapor pressure function, dimensionless
W_l = stock liquid density, lb/gal

Drain-Dry Tanks

The "arrival" component of filling losses for drain-dry tanks is completely covered by the "clingage" loss. Once this initial loss occurs, there is no remaining liquid inside the tank. Therefore, there is no vapor in the tank that could be expelled by the incoming liquid.

However, the "generated" component remains a valid aspect of the model. Therefore, the filling loss calculations for drain-dry tanks are identical to the filling loss calculations for internal floating roof tanks with a liquid heel. Although the equations are the same, the saturation factor will be lower for drain-dry tanks due to the lack of an "arrival" component. AP-42 Chapter 5, *Petroleum Industry*, provides emission factors for the loading of gasoline and crude oil into compartments according to the prior state of the compartment. A drain-dry tank would be most similar to a tank that was cleaned before filling because a cleaned tank also lacks "arrival" losses. The emission factor (0.33 lb/1000 gallons) for this kind of tank can be converted to a saturation factor by assuming a pressure of 8 psia (the same assumption used in the formulation of the emission factor), and substituting the molecular weight of gasoline (64 lb/lb-mole). The resulting saturation factor is 0.15. The equation is the same as Equation 2-26 with a different assumed saturation factor.

$$L_{FL} = \left(\frac{PV_V}{RT}\right) M_V \, S \tag{2-26}$$

where:

L_{FL} = filling loss during roof landing, lb
P = true vapor pressure of the liquid within the tank, psia
V_V = volume of the vapor space, ft^3
R = ideal gas constant, 10.731 psia-ft^3/(lb-mole-°R)
T = average temperature of the vapor and liquid below the floating roof, °R
M_V = stock vapor molecular weight, lb/lb-mole
S = filling saturation factor, dimension less (0.15 for a drain-dry tank).

7.1.3.3 Variable Vapor Space Tanks[18] –

Variable vapor space filling losses result when vapor is displaced by liquid during filling operations. Since the variable vapor space tank has an expandable vapor storage capacity, this loss is not as large as the filling loss associated with fixed roof tanks. Loss of vapor occurs only when the tank's vapor storage capacity is exceeded. Equation 3-1 assumes that one-fourth of the expansion capacity is available at the beginning of each transfer.

Variable vapor space system filling losses can be estimated from:

$$L_V = (2.40\times10^{-2})\left(\frac{M_V\ P_{VA}}{V_1}\right)\left[(V_1)-(0.25\ V_2\ N_2)\right] \tag{3-1}$$

where:

L_V = variable vapor space filling loss, lb/1,000 gal throughput
M_V = molecular weight of vapor in storage tank, lb/lb-mole; see Note 1 to Equation 1-21
P_{VA} = true vapor pressure at the daily average liquid surface temperature, psia; see Notes 1 and 2 to Equation 1-21
V_1 = volume of liquid pumped into system, throughput, bbl/yr
V_2 = volume expansion capacity of system, bbl; see Note 1
N_2 = number of transfers into system, dimensionless; see Note 2

Notes:

1. V_2 is the volume expansion capacity of the variable vapor space achieved by roof lifting or diaphragm flexing.

2. N_2 is the number of transfers into the system during the time period that corresponds to a throughput of V_1.

The accuracy of Equation 3-1 is not documented. Special tank operating conditions may result in actual losses significantly different from the estimates provided by Equation 3-1. For example, if one or more tanks with interconnected vapor spaces are filled while others are emptied simultaneously, all or part of the expelled vapors will be transferred to the tank, or tanks, being emptied. This is called balanced pumping. Equation 3-1 does not account for balanced pumping, and will overestimate losses under this condition. It should also be noted that, although not developed for use with heavier petroleum liquids such as kerosenes and fuel oils, the equation is recommended for use with heavier petroleum liquids in the absence of better data.

7.1.3.4 Pressure Tanks –

Losses occur during withdrawal and filling operations in low-pressure (2.5 to 15 psig) tanks when atmospheric venting occurs. High-pressure tanks are considered closed systems, with virtually no emissions. Vapor recovery systems are often found on low-pressure tanks. Fugitive losses are also associated with pressure tanks and their equipment, but with proper system maintenance, these losses are considered insignificant. No appropriate correlations are available to estimate vapor losses from pressure tanks.

7.1.3.5 Variations Of Emission Estimation Procedures –

All of the emission estimation procedures presented in Section 7.1.3 can be used to estimate emissions for shorter time periods by manipulating the inputs to the equations for the time period in question. For all of the emission estimation procedures, the daily average liquid surface temperature should be based on the appropriate temperature and solar insolation data for the time period over which the estimate is to be evaluated. The subsequent calculation of the vapor pressure should be based on the corrected daily liquid surface temperature. For example, emission calculations for the month of June would be based only on the meteorological data for June. It is important to note that a 1-month time frame is recommended as the shortest time period for which emissions should be estimated.

In addition to the temperature and vapor pressure corrections, the constant in the standing storage loss equation for fixed roof tanks would need to be revised based on the actual time frame used. The constant, 365, is based on the number of days in a year. To change the equation for a different time period, the constant should be changed to the appropriate number of days in the time period for which emissions are being estimated. The only change that would need to be made to the working loss equation for fixed roof tanks would be to change the throughput per year to the throughput during the time period for which emissions are being estimated.

Other than changing the meteorological data and the vapor pressure data, the only changes needed for the floating roof rim seal, deck fitting, and deck seam losses would be to modify the time frame by dividing the individual losses by the appropriate number of days or months. The only change to the withdrawal losses would be to change the throughput to the throughput for the time period for which emissions are being estimated.

Another variation that is frequently made to the emission estimation procedures is an adjustment in the working or withdrawal loss equations if the tank is operated as a surge tank or constant level tank. For constant level tanks or surge tanks where the throughput and turnovers are high but the liquid level in the tank remains relatively constant, the actual throughput or turnovers should not be used in the working loss or withdrawal loss equations. For these tanks, the turnovers should be estimated by determining the average change in the liquid height. The average change in height should then be divided by the total shell height. This adjusted turnover value should then be multiplied by the actual throughput to obtain the net throughput for use in the loss equations. Alternatively, a default turnover rate of four could be used based on data from these type tanks.

7.1.4 Hazardous Air Pollutants (HAP) Speciation Methodology

In some cases it may be important to know the annual emission rate for a component (e. g., HAP) of a stored liquid mixture. There are two basic approaches that can be used to estimate emissions for a single component of a stored liquid mixture. One approach involves calculating the total losses based upon the known physical properties of the mixture (i. e., gasoline) and then determining the individual component losses by multiplying the total loss by the weight fraction of the desired component. The second approach is similar to the first approach except that the mixture properties are unknown; therefore, the mixture properties are first determined based on the composition of the liquid mixture.

Case 1 — If the physical properties of the mixture are known (P_{VA}, M_V, M_L and W_L), the total losses from the tank should be estimated using the procedures described previously for the particular tank type. The component losses are then determined from either Equation 4-1 or 4-2. For fixed roof tanks, the emission rate for each individual component can be estimated by:

$$L_{T_i} = (Z_{V_i})(L_T) \tag{4-1}$$

where:

L_{T_i} = emission rate of component i, lb/yr
Z_{V_i} = weight fraction of component i in the vapor, lb/lb
L_T = total losses, lb/yr

For floating roof tanks, the emission rate for each individual component can be estimated by:

$$L_{T_i} = (Z_{V_i})(L_R + L_F + L_D) + (Z_{L_i})(L_{WD}) \tag{4-2}$$

where:

L_{T_i} = emission rate of component i, lb/yr
Z_{V_i} = weight fraction of component i in the vapor, lb/lb
L_R = rim seal losses, lb/yr
L_F = deck fitting losses, lb/yr
L_D = deck seam losses, lb/yr
Z_{L_i} = weight fraction of component i in the liquid, lb/lb
L_{WD} = withdrawal losses, lb/yr

If Equation 4-1 is used in place of Equation 4-2 for floating roof tanks, the value obtained will be approximately the same value as that achieved with Equation 4-2 because withdrawal losses are typically minimal for floating roof tanks.

In order to use Equations 4-1 and 4-2, the weight fraction of the desired component in the liquid and vapor phase is needed. The liquid weight fraction of the desired component is typically known or can be readily calculated for most mixtures. In order to calculate the weight fraction in the vapor phase, Raoult's Law must first be used to determine the partial pressure of the component. The partial pressure of the component can then be divided by the total vapor pressure of the mixture to determine the mole fraction of the component in the vapor phase. Raoult's Law states that the mole fraction of the component in the liquid (x_i) multiplied by the vapor pressure of the pure component (at the daily average liquid surface temperature) (P) is equal to the partial pressure (P_i) of that component:

$$P_i = (P)(x_i) \tag{4-3}$$

where:

P_i = partial pressure of component i, psia
P = vapor pressure of pure component i at the daily average liquid surface temperature, psia
xi = liquid mole fraction, lb-mole/lb-mole

The vapor pressure of each component can be calculated from Antoine's equation or found in standard references, as shown in Section 7.1.3.1. In order to use Equation 4-3, the liquid mole fraction must be determined from the liquid weight fraction by:

$$x_i = \left(\frac{Z_{Li} M_L}{M_i} \right) \tag{4-4}$$

where:

x_i = liquid mole fraction of component i, lb-mole/lb-mole
Z_{L_i} = weight fraction of component i in the liquid, lb/lb
M_L = molecular weight of liquid stock, lb/lb-mole
M_i = molecular weight of component i, lb/lb-mole

If the molecular weight of the liquid is not known, the liquid mole fraction can be determined by assuming a total weight of the liquid mixture (see Example 1 in Section 7.1.5).

The liquid mole fraction and the vapor pressure of the component at the daily average liquid surface temperature can then be substituted into Equation 4-3 to obtain the partial pressure of the component. The vapor mole fraction of the component can be determined from the following equation:

$$y_i = \frac{P_i}{P_{VA}} \tag{4-5}$$

where:

y_i = vapor mole fraction of component i, lb-mole/lb-mole
P_i = partial pressure of component i, psia
P_{VA} = total vapor pressure of liquid mixture, psia

The weight fractions in the vapor phase are calculated from the mole fractions in the vapor phase.

$$Z_{V_i} = \frac{y_i M_i}{M_V} \tag{4-6}$$

where:

Z_{V_i} = vapor weight fraction of component i, lb/lb
y_i = vapor mole fraction of component i, lb-mole/lb-mole
M_i = molecular weight of component i, lb/lb-mole
M_V = molecular weight of vapor stock, lb/lb-mole

The liquid and vapor weight fractions of each desired component and the total losses can be substituted into either Equations 4-1 or 4-2 to estimate the individual component losses.

Case 2 — For cases where the mixture properties are unknown but the composition of the liquid is known (i. e., nonpetroleum organic mixtures), the equations presented above can be used to obtain a reasonable estimate of the physical properties of the mixture. For nonaqueous organic mixtures, Equation 4-3 can be used to determine the partial pressure of each component. If Equation 4-4 is used to determine the liquid mole fractions, the molecular weight of the liquid stock must be known. If the molecular weight of the liquid stock is unknown, then the liquid mole fractions can be determined by assuming a weight basis and calculating the number of moles (see Example 1 in Section 7.1.5). The partial pressure of each component can then be determined from Equation 4-3.

For special cases, such as wastewater, where the liquid mixture is a dilute aqueous solution, Henry's Law should be used instead of Raoult's Law in calculating total losses. Henry's Law states that the mole fraction of the component in the liquid phase multiplied by the Henry's Law constant for the component in the mixture is equal to the partial pressure (P_i) for that component. For wastewater, Henry's Law constants are typically provided in the form of atm·m^3/g-mole.

Therefore, the appropriate form of Henry's Law equation is:

$$P_i = (H_A)\,(C_i) \tag{4-7}$$

where:

P_i = partial pressure of component i, atm
H_A = Henry's Law constant for component i, atm·m^3/g-mole
C_i = concentration of component i in the wastewater, g-mole/m^3; see Note

Section 4.3 of AP-42 presents Henry's Law constants for selected organic liquids. The partial pressure calculated from Equation 4-7 will need to be converted from atmospheres to psia (1 atm = 14.7 psia).

Note: Typically wastewater concentrations are given in mg/liter, which is equivalent to g/m^3. To convert the concentrations to g-mole/m^3 divide the concentration by the molecular weight of the component.

The total vapor pressure of the mixture can be calculated from the sum of the partial pressures:

$$P_{VA} = \sum P_i \tag{4-8}$$

where:

P_{VA} = vapor pressure at daily average liquid surface temperature, psia
P_i = partial pressure of component i, psia

This procedure can be used to determine the vapor pressure at any temperature. After computing the total vapor pressure, the mole fractions in the vapor phase are calculated using Equation 4-5. The vapor mole fractions are used to calculate the molecular weight of the vapor, M_V. The molecular weight of the vapor can be calculated by:

$$M_V = \sum M_i y_i \tag{4-9}$$

where:

M_V = molecular weight of the vapor, lb/lb-mole
M_i = molecular weight of component i, lb/lb-mole
y_i = vapor mole fraction of component i, lb-mole/lb-mole

Another variable that may need to be calculated before estimating the total losses, if it is not available in a standard reference, is the density of the liquid, W_L. If the density of the liquid is unknown, it can be estimated based on the liquid weight fractions of each component (see Section 7.1.5, Example 3).

All of the mixture properties are now known (P_{VA}, M_V, and W_L). These values can now be used with the emission estimation procedures outlined in Section 7.1.3 to estimate total losses. After calculating the total losses, the component losses can be calculated by using either Equations 4-1 or 4-2. Prior to calculating component losses, Equation 4-6 must be used to determine the vapor weight fractions of each component.

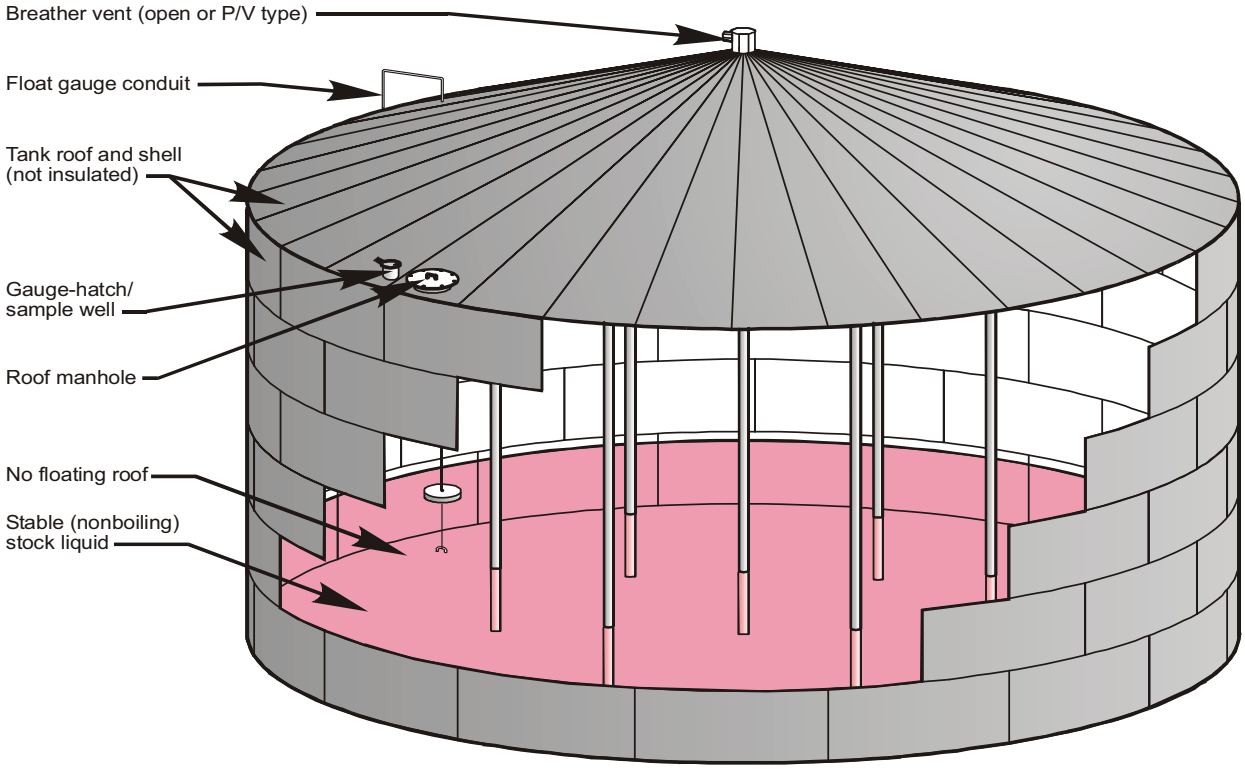

Figure 7.1-1. Typical fixed-roof tank.[20]

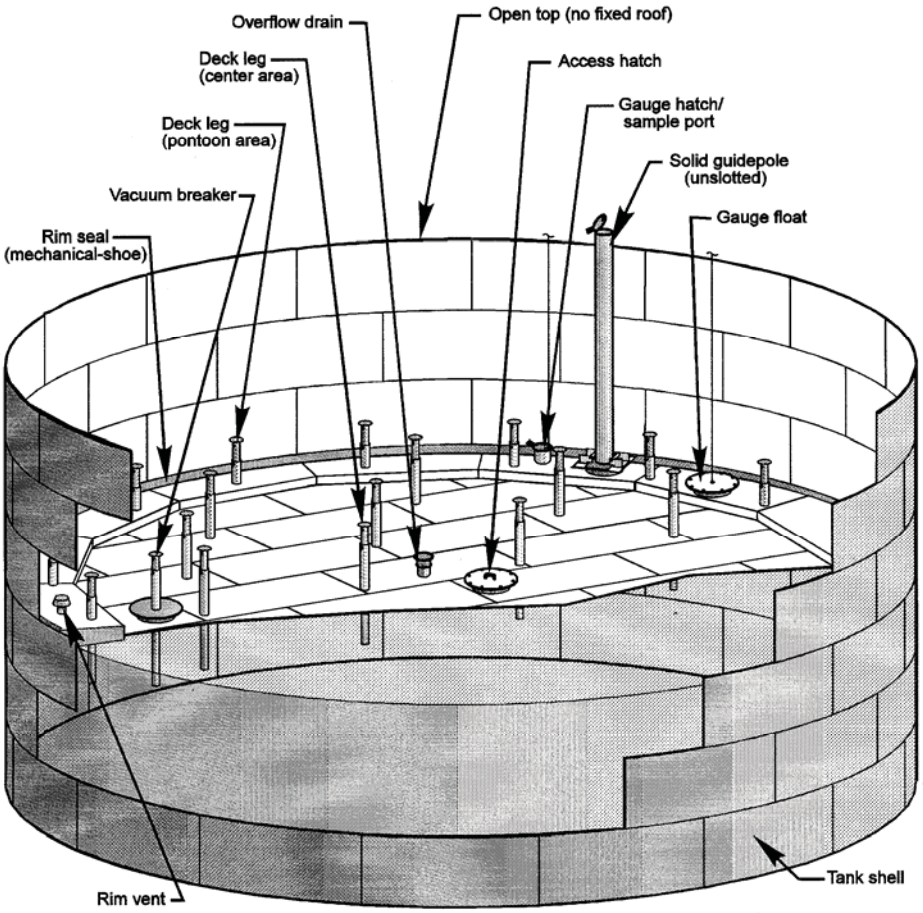

Figure 7.1-2. External floating roof tank (pontoon type).[20]

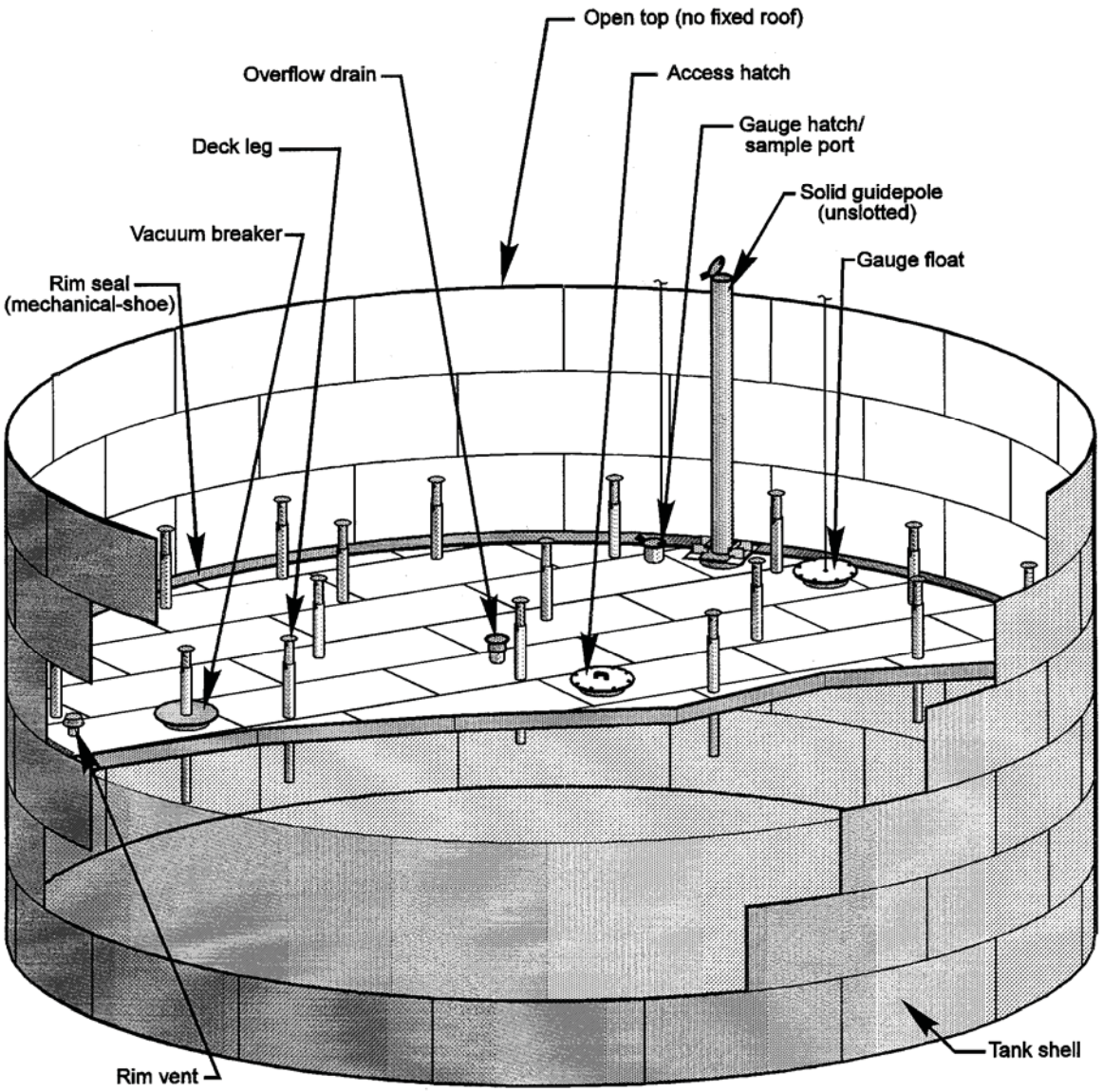

Figure 7.1-3. External floating roof tank (double deck).[20]

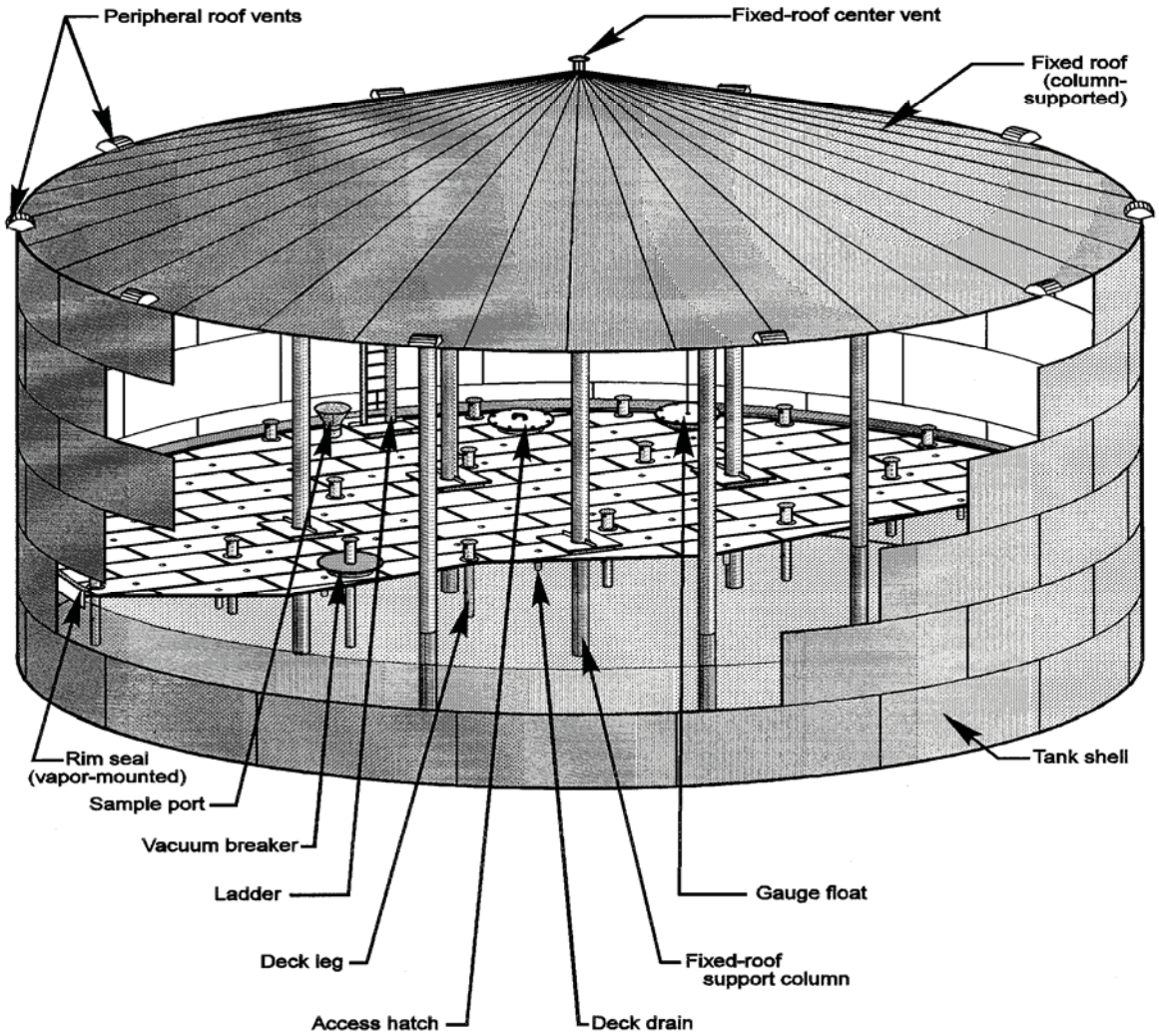

Figure 7.1-4. Internal floating roof tank.[20]

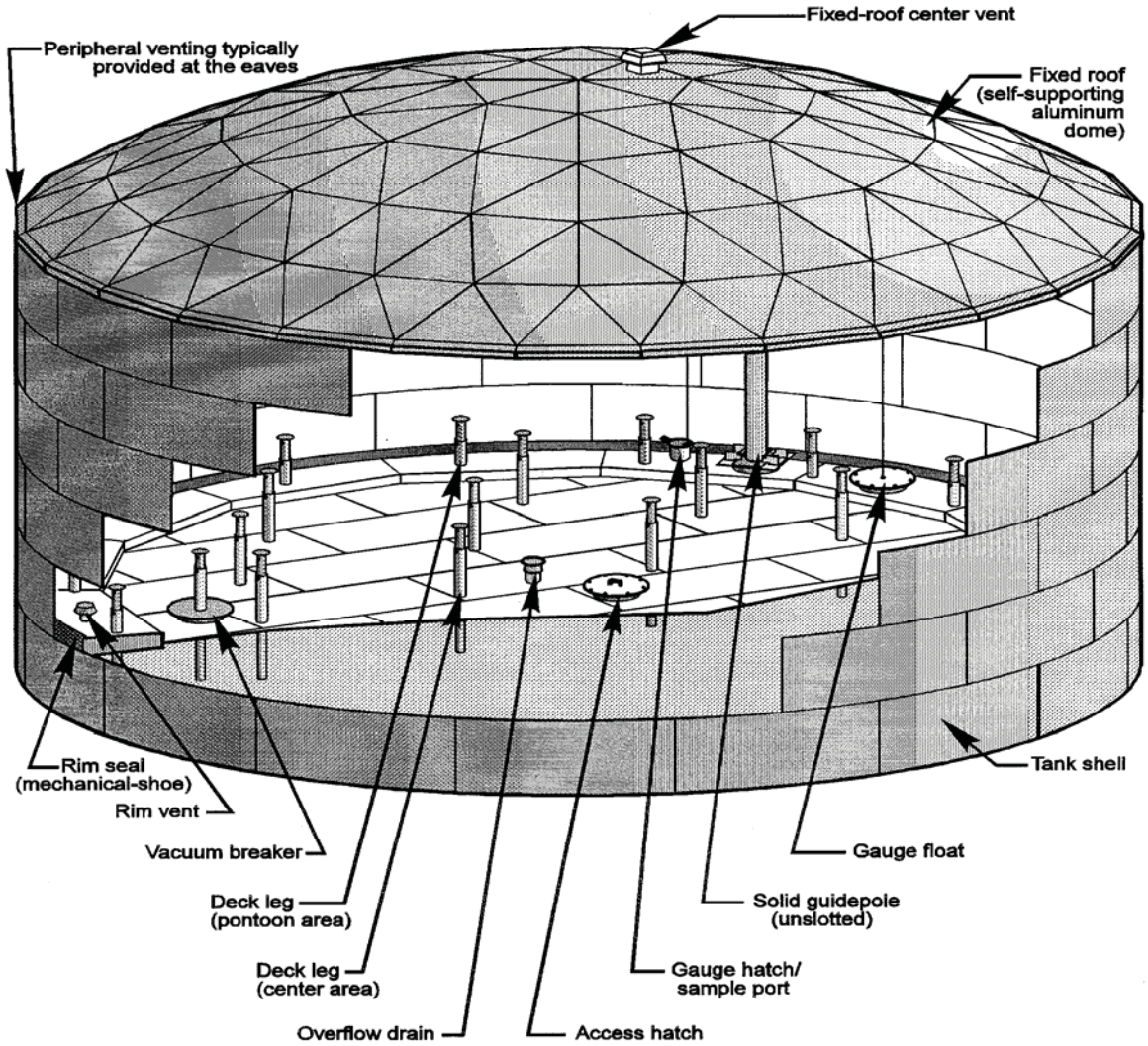

Figure 7.1-5. Domed external floating roof tank.[20]

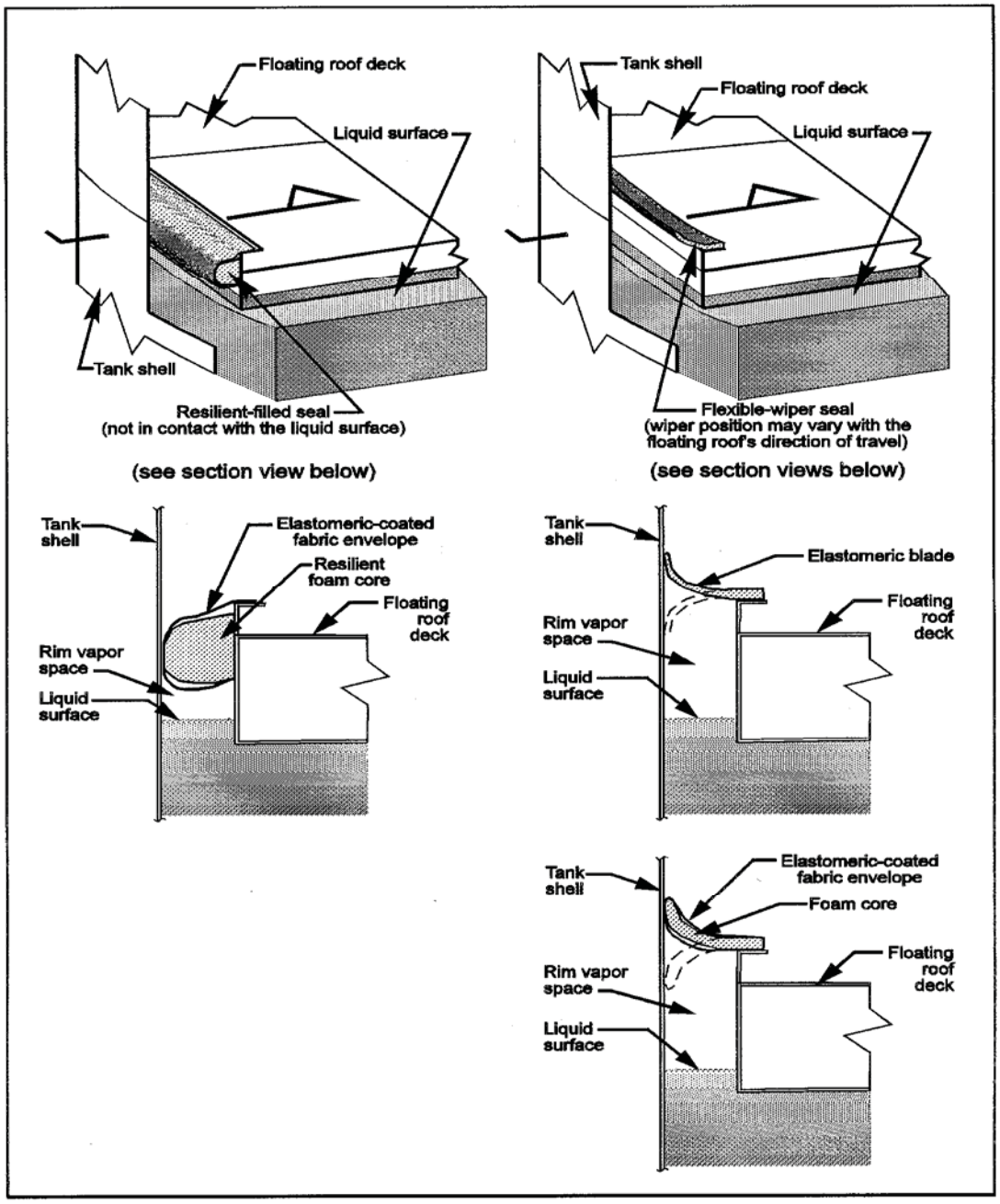

Figure 7.1-6. Vapor-mounted primary seals

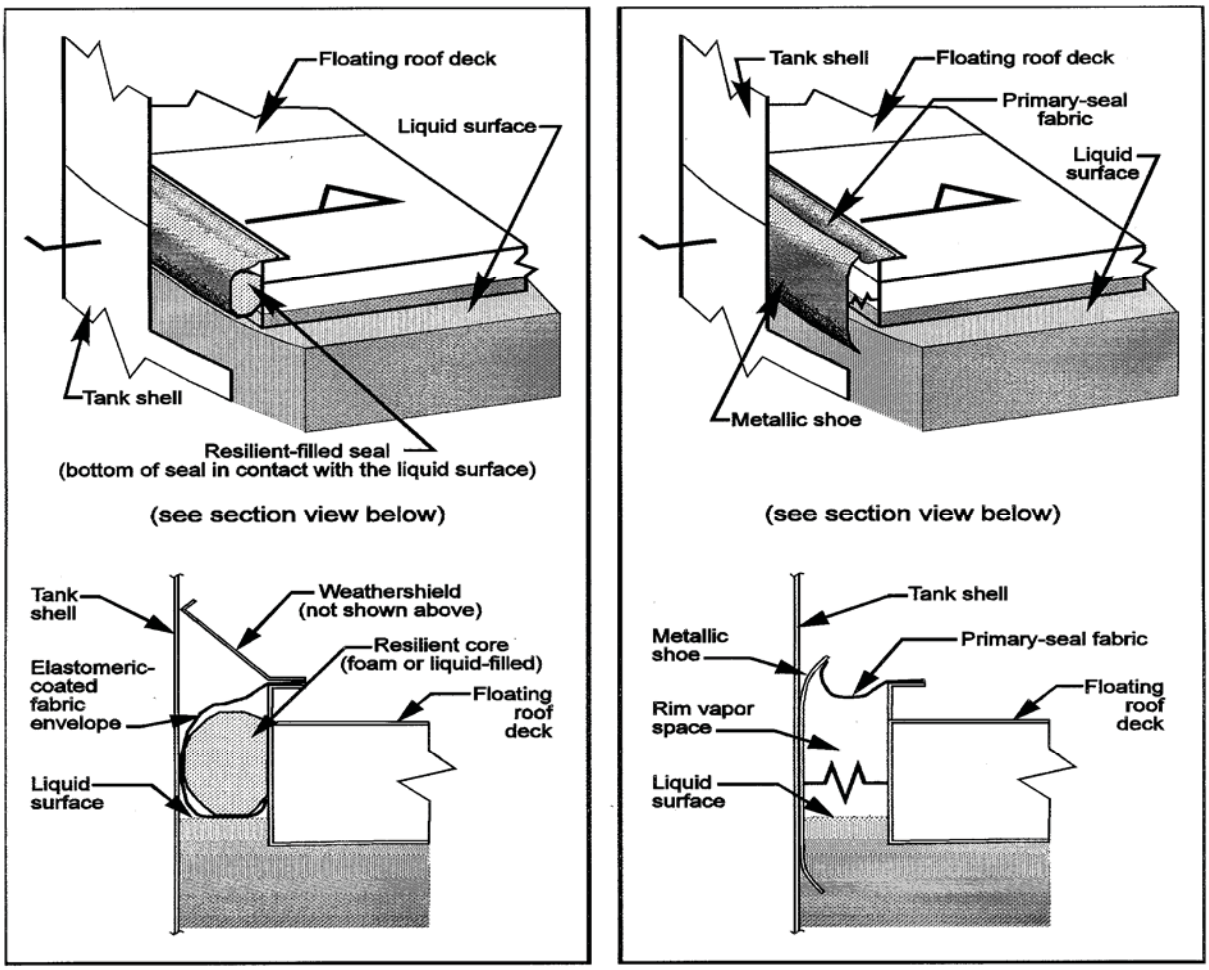

Figure 7.1-7. Liquid-mounted and mechanical shoe primary seals.[20]

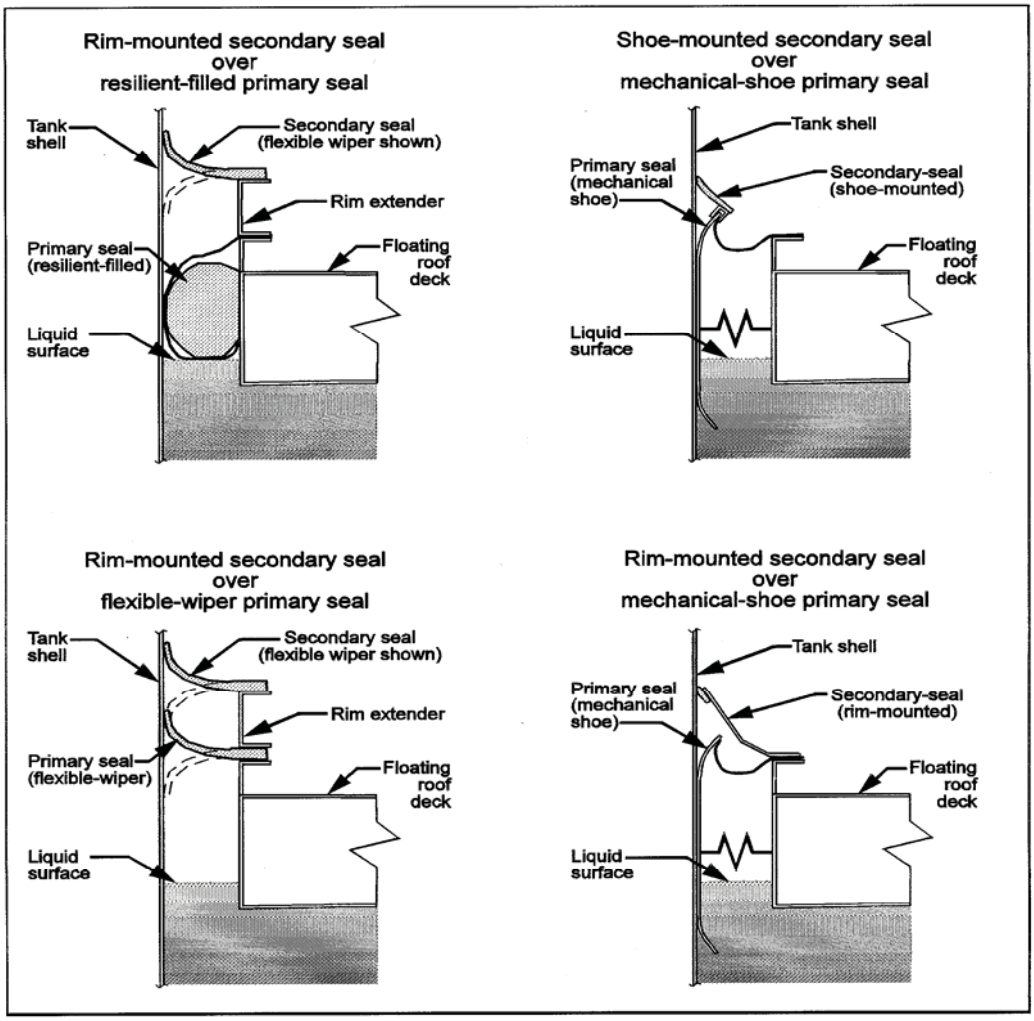

Figure 7.1-8. Secondary rim seals.[20]

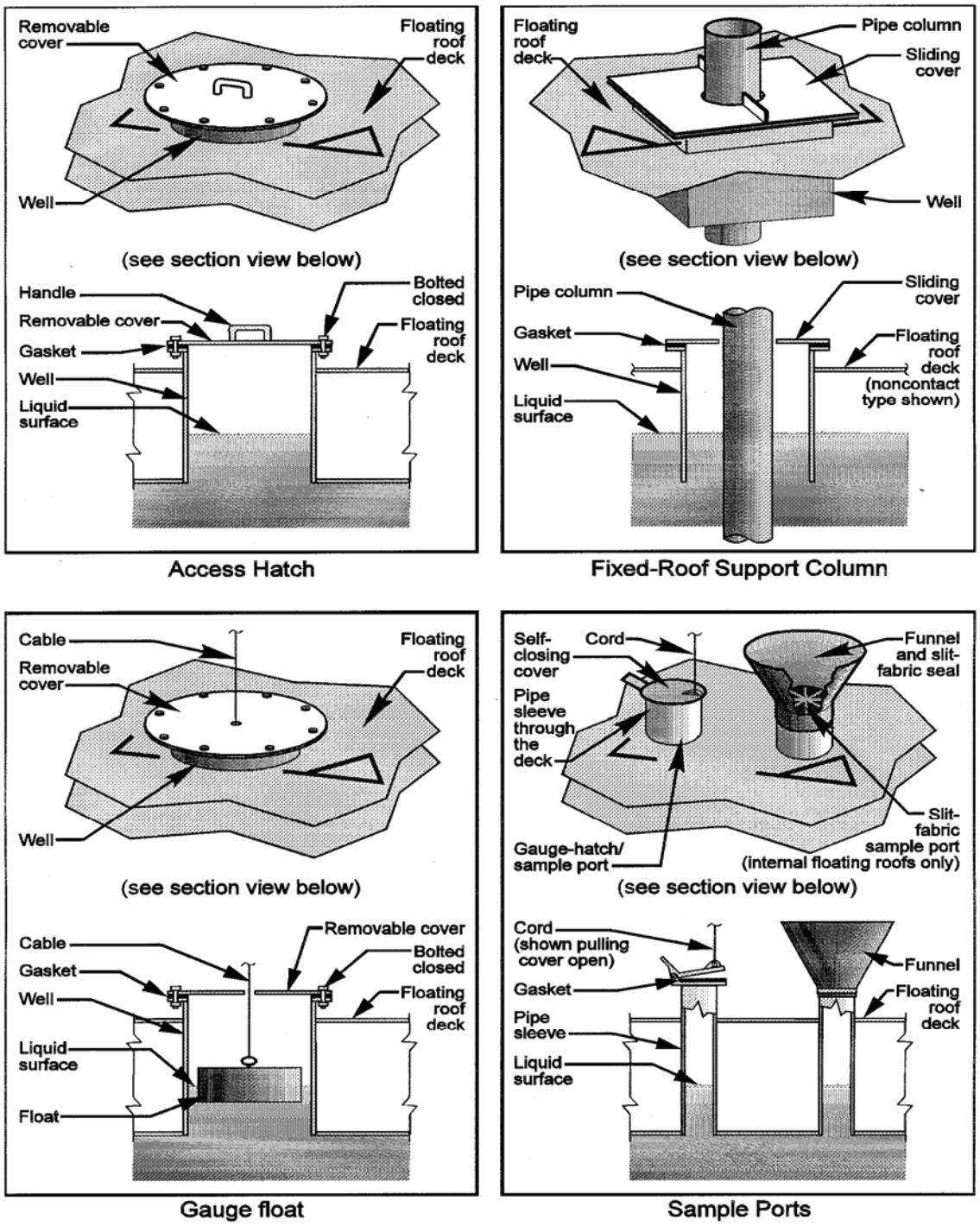

Figure 7.1-9. Deck fittings for floating roof tanks.[20]

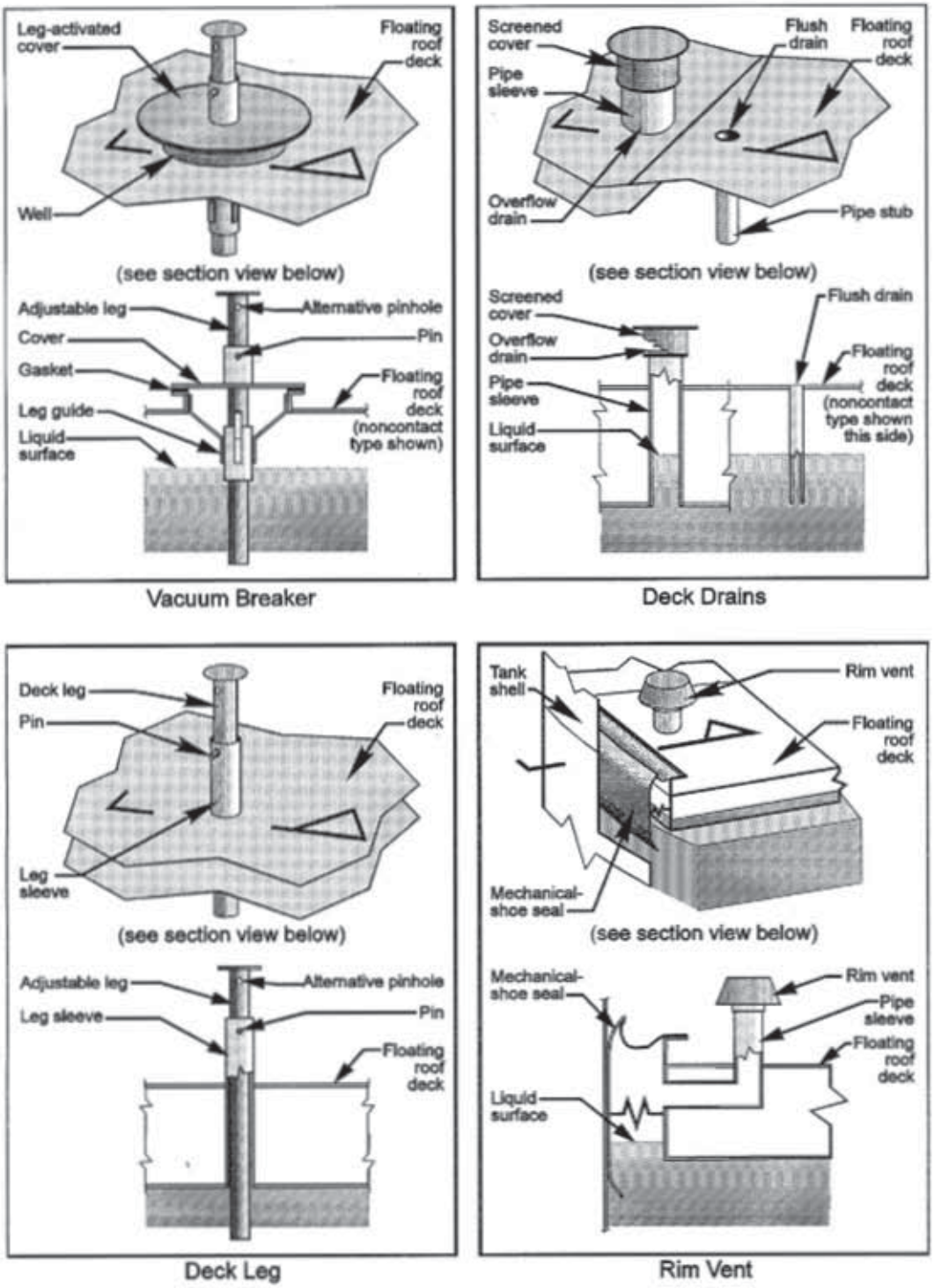

Figure 7.1-10. Deck fittings for floating roof tanks.[20]

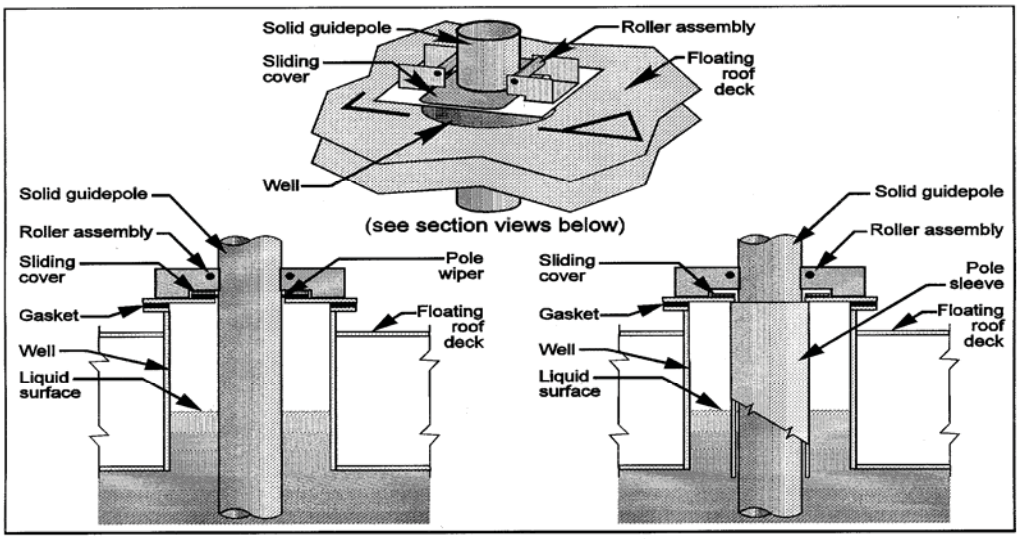

Unslotted (solid) Guidepole

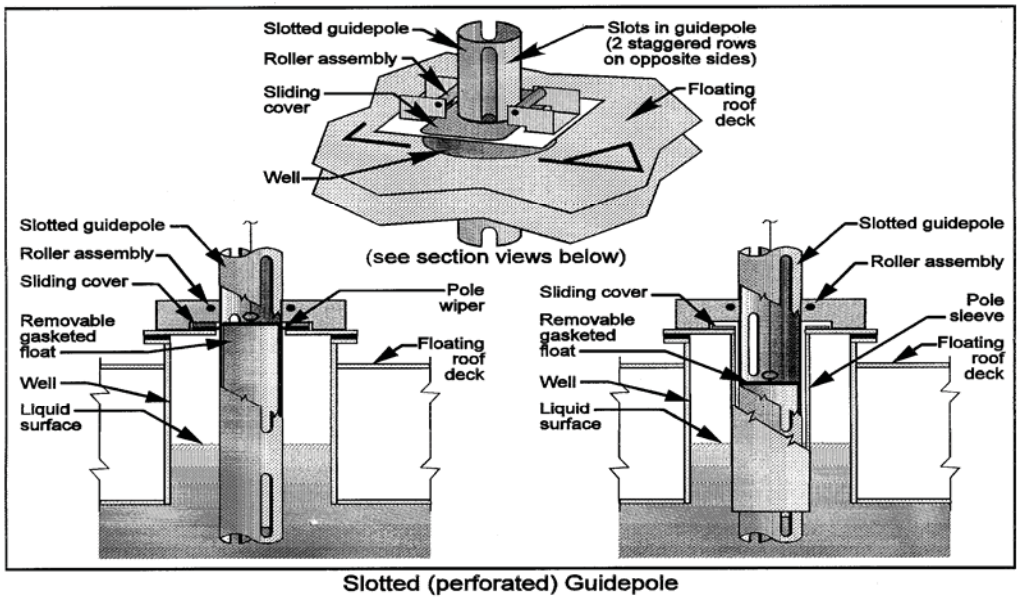

Slotted (perforated) Guidepole

Figure 7.1-11. Slotted and unslotted guidepoles.[20]

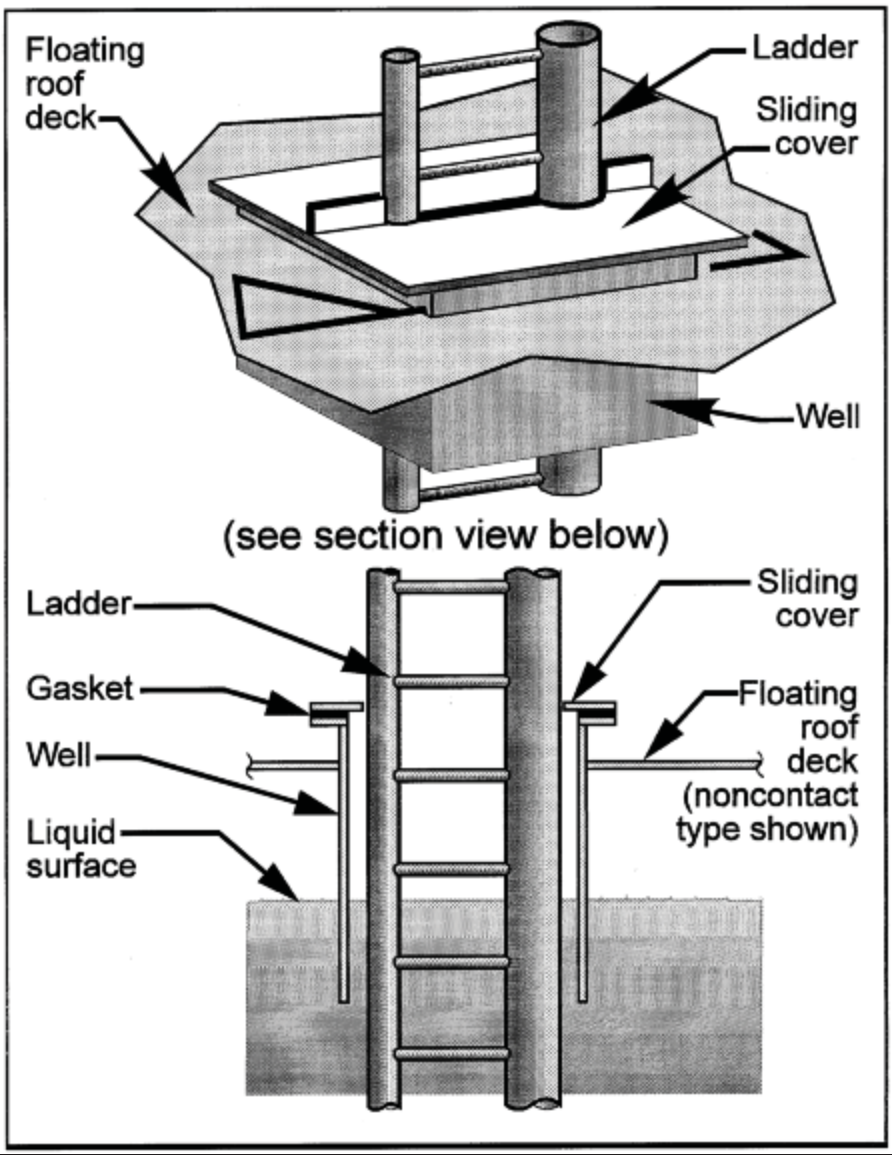

Figure 7.1-12. Ladder well.[20]

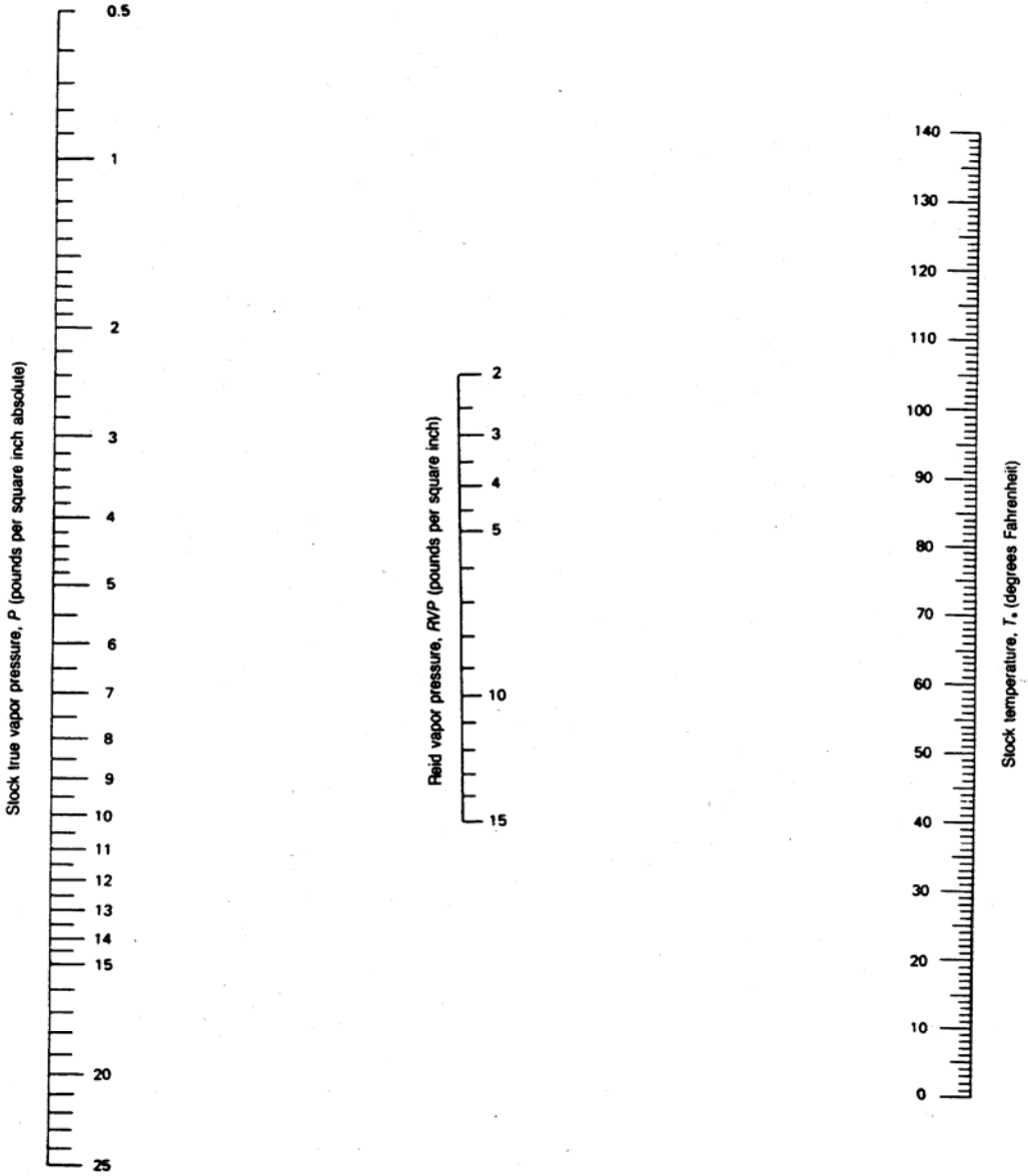

Figure 7.1-13a. True vapor pressure of crude oils with a Reid vapor pressure of 2 to 15 pounds per square inch.[4]

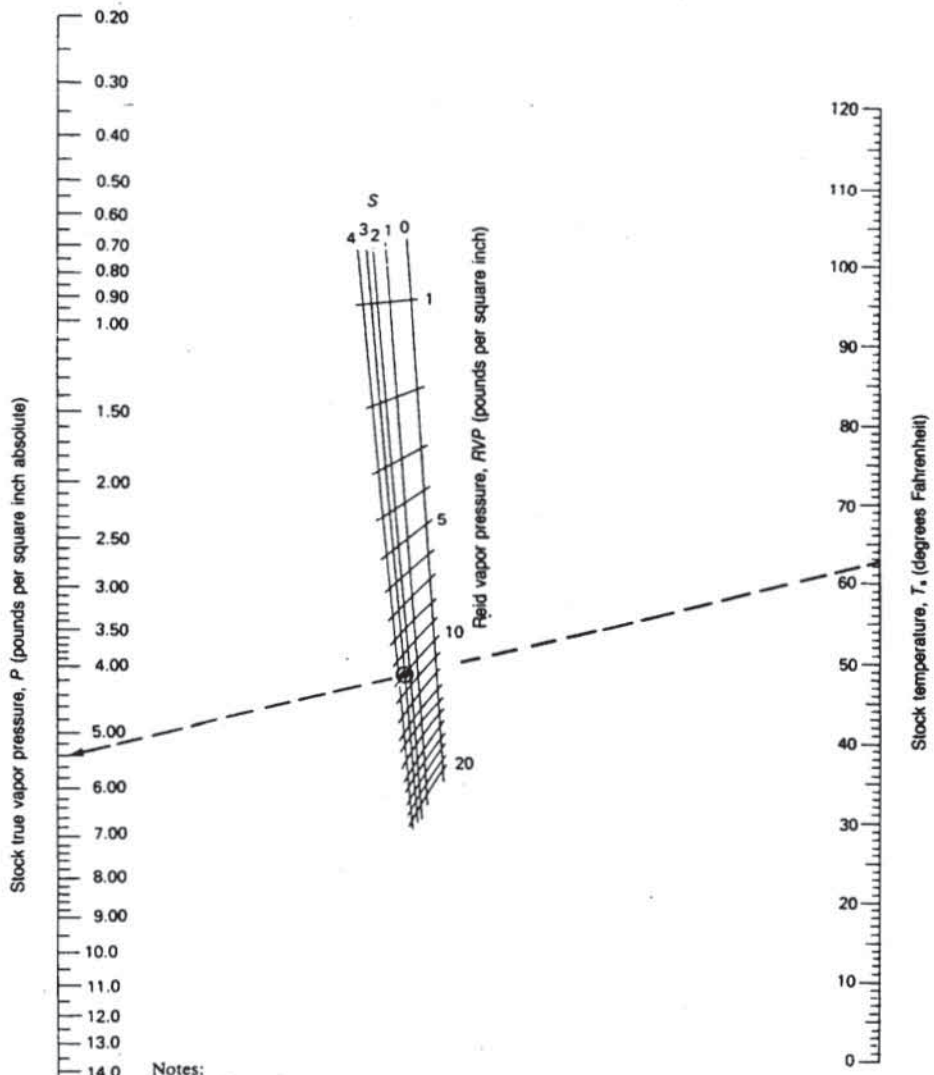

Notes:

1. S = slope of the ASTM distillation curve at 10 percent evaporated, in degrees Fahrenheit per percent
   = [(°F at 15 percent) − (°F at 5 percent)]/(10 percent).

In the absence of distillation data, the following average values of S may be used:

Motor gasoline—3.0.
Aviation gasoline—2.0.
Light naphtha (*RVP* of 9–14 pounds per square inch)—3.5.
Naphtha (*RVP* of 2–8 pounds per square inch)—2.5.

2. The broken line illustrates a sample problem for a gasoline stock (S = 3.0) with a Reid vapor pressure of 10 pounds per square inch and a stock temperature of 62.5°F.

Figure 7.1-14a. True vapor pressure of refined petroleum stocks with a Reid vapor pressure of 1 to 20 pounds per square inch.[4]

$$P = \exp\left\{\left[\left(\frac{2{,}799}{T+459.6}\right) - 2.227\right]\log_{10}(RVP) - \left(\frac{7{,}261}{T+459.6}\right) + 12.82\right\}$$

Where:

P = stock true vapor pressure, in pounds per square inch absolute.
T = stock temperature, in degrees Fahrenheit.
RVP = Reid vapor pressure, in pounds per square inch.

Note: This equation was derived from a regression analysis of points read off Figure 7.1-13a over the full range of Reid vapor pressures, slopes of the ASTM distillation curve at 10 percent evaporated, and stock temperatures. In general, the equation yields *P* values that are within +0.05 pound per square inch absolute of the values obtained directly from the nomograph.

Figure 7.1-13b. Equation for true vapor pressure of crude oils with a Reid vapor pressure of 2 to 15 pounds per square inch.[4]

$$P = \exp\left\{\left[0.7553 - \left(\frac{413.0}{T+459.6}\right)\right]S^{0.5}\log_{10}(RVP) - \left[1.854 - \left(\frac{1{,}042}{T+459.6}\right)\right]S^{0.5}\right.$$

$$\left. + \left[\left(\frac{2{,}416}{T+459.6}\right) - 2.013\right]\log_{10}(RVP) - \left(\frac{8{,}742}{T+459.6}\right) + 15.64\right\}$$

Where:

P = stock true vapor pressure, in pounds per square inch absolute.
T = stock temperature, in degrees Fahrenheit.
RVP = Reid vapor pressure, in pounds per square inch.
S = slope of the ASTM distillation curve at 10 percent evaporated, in degrees Fahrenheit per percent.

Note: This equation was derived from a regression analysis of points read off Figure 7.1-14a over the full range of Reid vapor pressures, slopes of the ASTM distillation curve at 10 percent evaporated, and stock temperatures. In general, the equation yields *P* values that are within +0.05 pound per square inch absolute of the values obtained directly from the nomograph.

Figure 7.1-14b. Equation for true vapor pressure of refined petroleum stocks with a Reid vapor pressure of 1 to 20 pounds per square inch.[4]

$$A = 15.64 - 1.854\,S^{0.5} - (0.8742 - 0.3280\,S^{0.5})\ln(RVP)$$
$$B = 8{,}742 - 1{,}042\,S^{0.5} - (1{,}049 - 179.4\,S^{0.5})\ln(RVP)$$

where:

RVP = stock Reid vapor pressure, in pounds per square inch
ln = natural logarithm function
S = stock ASTM-D86 distillation slope at 10 volume percent evaporation (°F/vol %)

Figure 7.1-15. Equations to determine vapor pressure constants A and B for refined petroleum stocks.[8]

$$A = 12.82 - 0.9672 \ln (RVP)$$

$$B = 7{,}261 - 1{,}216 \ln (RVP)$$

where:

RVP = Reid vapor pressure, psi
ln = natural logarithm function

Figure 7.1-16. Equations to determine vapor pressure Constants A and B for crude oil stocks.[8]

Daily Maximum and Minimum Liquid Surface Temperature, (°R)

$$T_{LX} = T_{LA} + 0.25 \ \Delta T_V$$

$$T_{LN} = T_{LA} - 0.25 \ \Delta T_V$$

where:

T_{LX} = daily maximum liquid surface temperature, °R
T_{LA} is as defined in Note 3 to Equation 1-21
ΔT_V is as defined in Note 1 to Equation 1-7
T_{LN} = daily minimum liquid surface temperature, °R

Figure 7.1-17. Equations for the daily maximum and minimum liquid surface temperatures.[8]

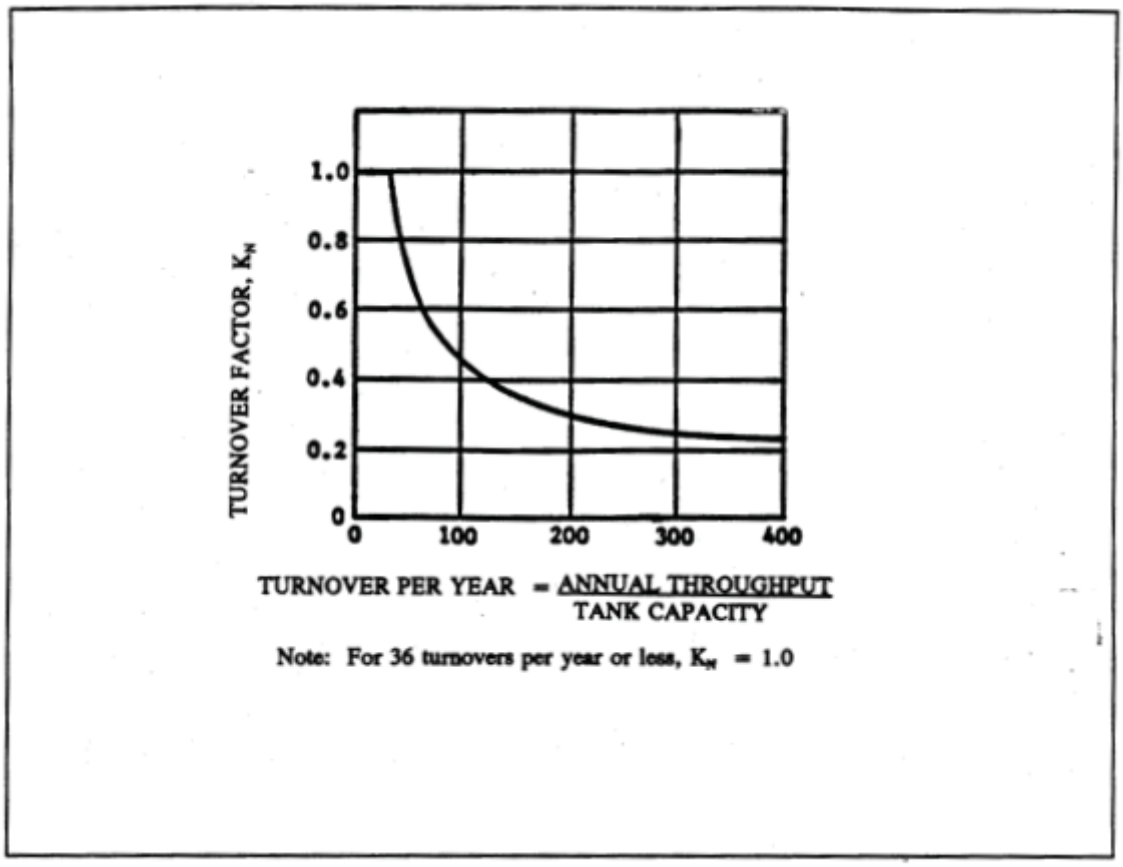

Figure 7.1-18. Turnover Factor (KN) for fixed roof tanks.[8]

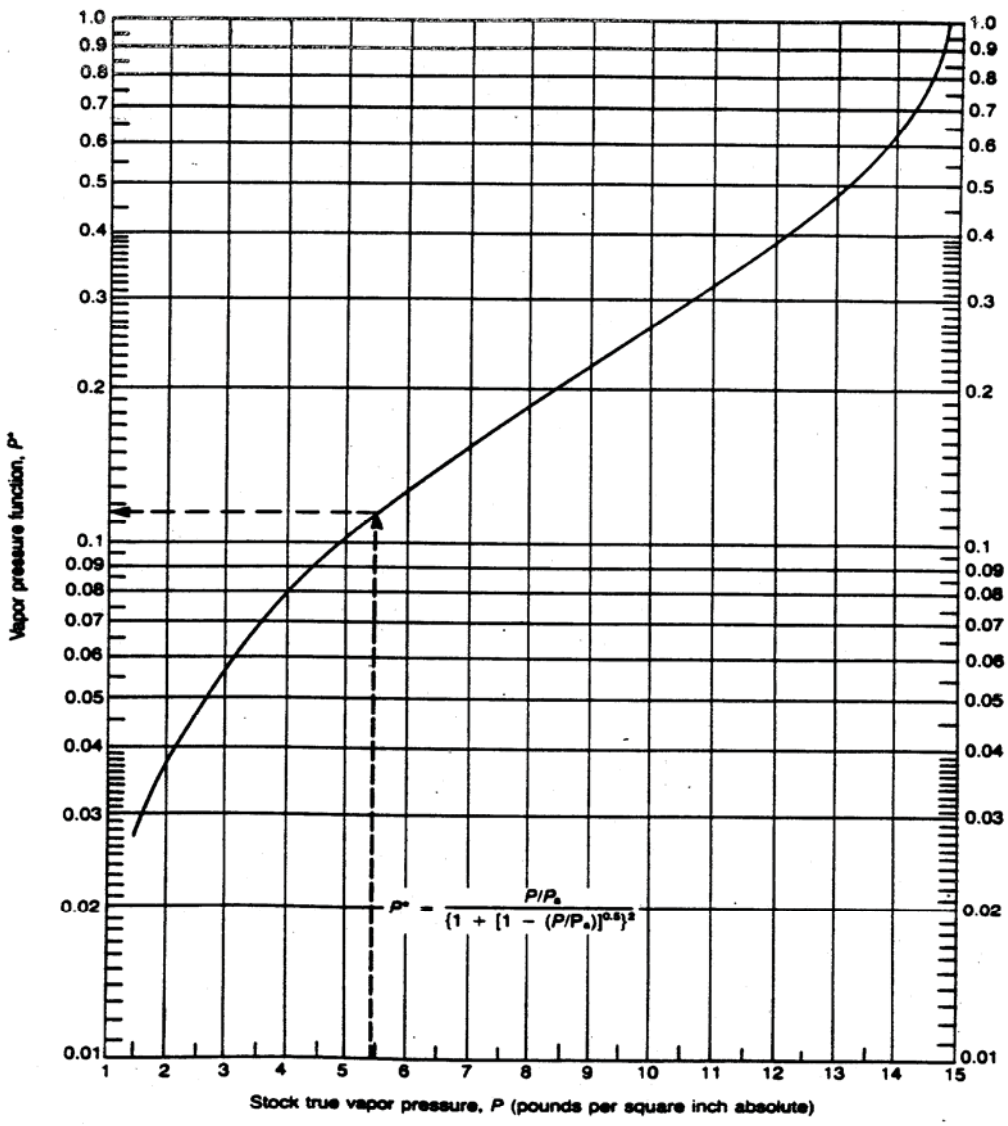

Notes:

1. Broken line illustrates sample problem for $P = 5.4$ pounds per square inch absolute.
2. Curve is for atmospheric pressure, P_a, equal to 14.7 pounds per square inch absolute.

Figure 7.1-19. Vapor pressure function.[4]

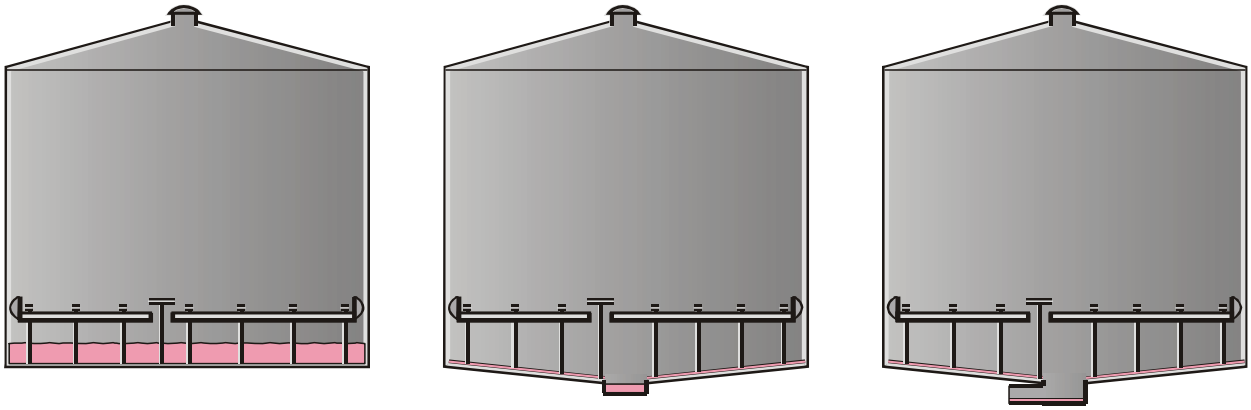

Full Liquid Heel
(standing liquid
across the entire bottom)

Partial Liquid Heel
(standing liquid only
in or near a sump;
clingage elsewhere)

Drain Dry
(no standing liquid,
only liquid is clingage)

Figure 7.1-20. Bottom conditions for landing loss.[20]

Table 7.1-1. LIST OF ABBREVIATIONS USED IN THE TANK EQUATIONS

Variable	Description
α	tank paint solar absorptance, dimensionless
π	constant, (3.14159)
A	constant in vapor pressure equation, dimensionless
A_{deck}	area of deck, ft^2
A_{fi}	liquid surface area within a particular type of deck fitting, in^2
B	constant in vapor pressure equation, °R or °C
C	constant in vapor pressure equation, °R or °C
C_S	shell clingage factor, bbl/1,000 ft^2
C_{sf}	filling saturation factor
D	tank diameter, ft
D_E	effective tank diameter, ft
F_C	effective column diameter, ft
F_F	total deck fitting loss factor, lb-mole/yr
F_R	rim deck loss factor, lb-mole/ft·yr
H_L	liquid height, ft
H_{LX}	maximum liquid height, ft
H_R	tank roof height, ft
H_{RO}	roof outage, ft
H_S	tank shell height, ft
H_{VO}	vapor space outage, ft
i	1,2,.....n, dimensionless
I	daily total solar insolation factor, Btu/ft^2·d
K_C	product factor for floating roof tanks, dimensionless
K_D	deck seam loss per unit seam length factor, lb-mole/ft-yr
K_E	vapor space expansion factor, dimensionless
K_{fai}	zero wind speed loss factor
K_{F_i}	loss factor for a particular type of deck fitting, lb-mole/yr
K_N	turnover factor, dimensionless
K_P	working loss product factor for fixed roof tanks, dimensionless
K_{Ra}	zero wind speed rim seal loss factor, lb-mole/ft·yr
K_{Rb}	wind speed dependent rim seal loss factor, lb-mole/ $(mph)^n$ft·yr
K_S	vented vapor saturation factor, dimensionless
K_v	fitting wind speed correction factor, dimensionless
L	length of tank, ft
L_C	clingage factor for drain dry tanks
L_D	deck seam loss, lb/yr
L_F	deck fitting loss, lb/yr
L_{FL}	filling loss during roof landing, lb/landing event
L_R	rim seal loss, lb/yr
L_{RL}	rim seal loss during roof landing, lb/landing event
L_S	standing storage losses, lb/yr
L_{seam}	total length of deck seam, ft
L_{SL}	standing loss during roof landing, lb/landing event
L_T	total losses, lb/yr
L_{T_i}	emission rate of component i, lb/yr
L_{TL}	total loss during roof landing, lb/landing event
L_V	variable vapor space filling loss, lb/1,000 gal throughput
L_W	working losses, lb/yr
L_{WD}	withdrawal loss, lb/yr
m_i	loss factor for a particular type of deck fitting, dimensionless
M_i	molecular weight of component i, lb/lb-mole
M_L	molecular weight of liquid mixture, lb/lb-mole
M_V	vapor molecular weight, lb/lb-mole
N	number of turnovers per year, dimensionless
n	seal-related wind speed exponent, dimensionless
N_2	number of transfers into system, dimensionless
N_c	number of columns
N_C	number of columns, dimen-sionless
N_d	number of drains
n_f	total number of different types of fittings, dimensionless
N_{Fa_i}	zero wind speed loss factor for a particular type of deck fitting, lb-mole/yr
N_{Fb_i}	wind speed dependent loss factor for a particular type of fitting, lb-mole/ mph^m·yr
N_{F_i}	number of deck fittings of a particular type, dimensionless
N_l	number of deck legs
N_{TOTAL}	total number of moles in mixture, lb-mole
N_{vb}	number of vacuum breakers
P	true vapor pressure of component i, psia
P^*	vapor pressure function, dimensionless
P_A	atmospheric pressure, psi
ΔP_B	breather vent pressure setting range, psig
P_{BP}	breather vent pressure setting, psig
P_{BV}	breather vent vacuum setting, psig

Table 7.1-1 (cont.).

Variable	Description	Variable	Description
P_I	gauge pressure within the vapor space, psig	T_B	liquid bulk temperature, °R
P_i	partial pressure of component i, psia	T_{LA}	daily average liquid surface temperature, °R
ΔP_V	daily vapor pressure range, psi	ΔT_V	daily vapor temperature range, °R
P_{VA}	vapor pressure at daily average liquid surface temperature, psia	v	average wind speed, mph
P_{VN}	vapor pressure at the daily minimum liquid surface temperature, psia	V_1	volume of liquid pumped into system, bbl/yr
P_{VX}	vapor pressure at the daily maximum liquid surface temperature, psia	V_2	volume expansion capacity, bbl
Q	annual net throughput, bbl/yr	V_{LX}	tank maximum liquid volume, ft^3
R	ideal gas constant, (10.731 psia·ft^3/lb-mole·°R)	V_V	vapor space volume, ft^3
R_R	tank dome roof radius, ft	W_i	liquid density of component i, lb/ft^3
R_S	tank shell radius, ft	W_L	average organic liquid density, lb/gal
S_D	deck seam length factor, ft/ft^2	W_V	vapor density, lb/ft^3
S_R	tank cone roof slope, ft/ft	x_i	liquid mole fraction of component i, lb-mole/lb-mole
ΔT_A	daily ambient temperature range, °R	y_i	vapor mole fraction of component i, lb-mole/lb-mole
T_{AA}	daily average ambient temperature, °R	Z_{L_i}	liquid weight fraction of component i, lb/lb
T_{AN}	daily minimum ambient temperature, °R	Z_{V_i}	vapor weight fraction of component i, lb/lb
T_{AX}	daily maximum ambient temperature, °R		

Table 7.1-2. PROPERTIES (M_V, P_{VA}, W_L) OF SELECTED PETROLEUM LIQUIDS[a]

Petroleum Liquid	Vapor Molecular Weight at 60°F, M_V (lb/lb-mole)	Liquid Density At 60°F, W_L (lb/gal)	True Vapor Pressure, P_{VA} (psi)						
			40°F	50°F	60°F	70°F	80°F	90°F	100°F
Crude oil RVP 5	50	7.1	1.8	2.3	2.8	3.4	4.0	4.8	5.7
Distillate fuel oil No. 2	130	7.1	0.0031	0.0045	0.0065	0.0090	0.012	0.016	0.022
Gasoline RVP 7	68	5.6	2.3	2.9	3.5	4.3	5.2	6.2	7.4
Gasoline RVP 7.8	68	5.6	2.5929	3.2079	3.9363	4.793	5.7937	6.9552	8.2952
Gasoline RVP 8.3	68	5.6	2.7888	3.444	4.2188	5.1284	6.1891	7.4184	8.8344
Gasoline RVP 10	66	5.6	3.4	4.2	5.2	6.2	7.4	8.8	10.5
Gasoline RVP 11.5	65	5.6	4.087	4.9997	6.069	7.3132	8.7519	10.4053	12.2949
Gasoline RVP 13	62	5.6	4.7	5.7	6.9	8.3	9.9	11.7	13.8
Gasoline RVP 13.5	62	5.6	4.932	6.0054	7.2573	8.7076	10.3774	12.2888	14.4646
Gasoline RVP 15.0	60	5.6	5.5802	6.774	8.1621	9.7656	11.6067	13.7085	16.0948
Jet kerosene	130	7.0	0.0041	0.0060	0.0085	0.011	0.015	0.021	0.029
Jet naphtha (JP-4)	80	6.4	0.8	1.0	1.3	1.6	1.9	2.4	2.7
Residual oil No. 6	190	7.9	0.00002	0.00003	0.00004	0.00006	0.00009	0.00013	0.00019

[a] References 10 and 11

Table 7.1-3. PHYSICAL PROPERTIES OF SELECTED PETROCHEMICALS[a]

Name	Formula	Molecular Weight	Boiling Point At 1 Atmosphere (°F)	Liquid Density At 60°F (lb/gal)	Vapor Pressure (psia) At						
					40°F	50°F	60°F	70°F	80°F	90°F	100°F
Acetone	CH_3COCH_3	58.08	133.0	6.628	1.682	2.185	2.862	3.713	4.699	5.917	7.251
Acetonitrile	CH_3CN	41.05	178.9	6.558	0.638	0.831	1.083	1.412	1.876	2.456	3.133
Acrylonitrile	CH_2:CHCN	53.06	173.5	6.758	0.812	0.967	1.373	1.779	2.378	3.133	4.022
Allyl alcohol	CH_2:$CHCH_2OH$	58.08	206.6	7.125	0.135	0.193	0.261	0.387	0.522	0.716	1.006
Allyl chloride	CH_2:$CHCH_2Cl$	76.53	113.2	7.864	2.998	3.772	4.797	6.015	7.447	9.110	11.025
Ammonium hydroxide (28.8% solution)	NH_4OH--H_2O	35.05	83.0	7.481	5.130	6.630	8.480	10.760	13.520	16.760	20.680
Benzene	C_6H_6	78.11	176.2	7.365	0.638	0.870	1.160	1.508	1.972	2.610	3.287
iso-Butyl alcohol	$(CH_3)_2CHCH_2OH$	74.12	227.1	6.712	0.058	0.097	0.135	0.193	0.271	0.387	0.541
tert-Butyl alcoholv	$(CH_3)_3COH$	74.12	180.5	6.595	0.174	0.290	0.425	0.638	0.909	1.238	1.702
n-Butyl chloride	$CH_3CH_2CH_2CH_2Cl$	92.57	172.0	7.430	0.715	1.006	1.320	1.740	2.185	2.684	3.481
Carbon disulfide	CS_2	76.13	115.3	10.588	3.036	3.867	4.834	6.014	7.387	9.185	11.215
Carbon tetrachloride	CCl_4	153.84	170.2	13.366	0.793	1.064	1.412	1.798	2.301	2.997	3.771
Chloroform	$CHCl_3$	119.39	142.7	12.488	1.528	1.934	2.475	3.191	4.061	5.163	6.342
Chloroprene	CH_2:CCl·CH:CH_2	88.54	138.9	8.046	1.760	2.320	2.901	3.655	4.563	5.685	6.981
Cyclohexane	C_6H_{12}	84.16	177.3	6.522	0.677	0.928	1.218	1.605	2.069	2.610	3.249
Cyclopentane	C_5H_{10}	70.13	120.7	6.248	2.514	3.287	4.177	5.240	6.517	8.063	9.668
1,1-Dichloroethane	CH_3CHCl_2	98.97	135.1	9.861	1.682	2.243	2.901	3.771	4.738	5.840	7.193
1,2-Dichloroethane	CH_2ClCH_2Cl	98.97	182.5	10.500	0.561	0.773	1.025	1.431	1.740	2.243	2.804
cis-1,2- Dichloro-ethylene	CHCl:CHCl	96.95	140.2	10.763	1.450	2.011	2.668	3.461	4.409	5.646	6.807
trans-1,2-Dichloro-ethylene	CHCl:CHCl	96.95	119.1	10.524	2.552	3.384	4.351	5.530	6.807	8.315	10.016
Diethylamine	$(C_2H_5)_2NH$	73.14	131.9	5.906	1.644	1.992	2.862	3.867	4.892	6.130	7.541
Diethyl ether	$C_2H_5OC_2H_5$	74.12	94.3	5.988	4.215	5.666	7.019	8.702	10.442	13.342	Boils
Di-*iso*-propyl ether	$(CH_3)_2CHOCH(CH_3)_2$	102.17	153.5	6.075	1.199	1.586	2.127	2.746	3.481	4.254	5.298
1,4-Dioxane	O·$CH_2CH_2OCH_2CH_2$	88.10	214.7	8.659	0.232	0.329	0.425	0.619	0.831	1.141	1.508
Dipropyl ether	$CH_3CH_2CH_2OCH_2CH_2CH_3$	102.17	195.8	6.260	0.425	0.619	0.831	1.102	1.431	1.876	2.320
Ethyl acetate	$C_2H_5OOCCH_3$	88.10	170.9	7.551	0.580	0.831	1.102	1.489	1.934	2.514	3.191
Ethyl acrylate	C_2H_5OOCCH:CH_2	100.11	211.8	7.750	0.213	0.290	0.425	0.599	0.831	1.122	1.470
Ethyl alcohol	C_2H_5OH	46.07	173.1	6.610	0.193	0.406	0.619	0.870	1.218	1.682	2.320

Table 7.1-3 (cont.).

Name	Formula	Molecular Weight	Boiling Point At 1 Atmosphere (°F)	Liquid Density At 60°F (Pounds Per Gallon)	Vapor Pressure (Pounds Per Square Inch Absolute) At						
					40°F	50°F	60°F	70°F	80°F	90°F	100°F
Freon 11	CCl_3F	137.38	75.4	12.480	7.032	8.804	10.900	13.40	16.31	19.69	23.60
n-Heptane	$CH_3(CH_2)_5CH_3$	100.20	209.2	5.727	0.290	0.406	0.541	0.735	0.967	1.238	1.586
n-Hexane	$CH_3(CH_2)_4CH_3$	86.17	155.7	5.527	1.102	1.450	1.876	2.436	3.055	3.906	4.892
Hydrogen cyanide	HCN	27.03	78.3	5.772	6.284	7.831	9.514	11.853	15.392	18.563	22.237
Isopentane	$(CH_3)_2CHCH_2CH_3$	72.15	82.1	5.199	5.878	7.889	10.005	12.530	15.334	18.370	21.657
Isoprene	$(CH_2):C(CH_3)CH:CH_2$	68.11	93.5	5.707	4.757	6.130	7.677	9.668	11.699	14.503	17.113
Isopropyl alcohol	$(CH_3)_2{\cdot}CHOH$	60.09	180.1	6.573	0.213	0.329	0.483	0.677	0.928	1.296	1.779
Methacrylonitrile	$CH_2:CH(CH_3)CN$	67.09	194.5	6.738	0.483	0.657	0.870	1.160	1.470	1.934	2.456
Methyl acetate	CH_3OOCCH_3	74.08	134.8	7.831	1.489	2.011	2.746	3.693	4.699	5.762	6.961
Methyl acrylate	$CH_3OOCCH:CH_2$	86.09	176.9	7.996	0.599	0.773	1.025	1.354	1.798	2.398	3.055
Methyl alcohol	CH_3OH	32.04	148.4	6.630	0.735	1.006	1.412	1.953	2.610	3.461	4.525
Methylcyclohexane	$CH_3{\cdot}C_6H_{11}$	98.18	213.7	6.441	0.309	0.425	0.541	0.735	0.986	1.315	1.721
Methylcyclopentane	$CH_3C_5H_9$	84.16	161.3	6.274	0.909	1.160	1.644	2.224	2.862	3.616	4.544
Methylene chloride	CH_2Cl_2	84.94	104.2	11.122	3.094	4.254	5.434	6.787	8.702	10.329	13.342
Methyl ethyl ketone	$CH_3COC_2H_5$	72.10	175.3	6.747	0.715	0.928	1.199	1.489	2.069	2.668	3.345
Methyl methacrylate	$CH_3OOC(CH_3):CH_2$	100.11	212.0	7.909	0.116	0.213	0.348	0.541	0.773	1.064	1.373
Methyl propyl ether	$CH_3OC_3H_7$	74.12	102.1	6.166	3.674	4.738	6.091	7.058	9.417	11.602	13.729
Nitromethane	CH_3NO_2	61.04	214.2	9.538	0.213	0.251	0.348	0.503	0.715	1.006	1.334
n-Pentane	$CH_3(CH_2)_3CH_3$	72.15	96.9	5.253	4.293	5.454	6.828	8.433	10.445	12.959	15.474
n-Propylamine	$C_3H_7NH_2$	59.11	119.7	6.030	2.456	3.191	4.157	5.250	6.536	8.044	9.572
1,1,1-Trichloroethane	CH_3CCl_3	133.42	165.2	11.216	0.909	1.218	1.586	2.030	2.610	3.307	4.199
Trichloroethylene	$CHCl:CCl_2$	131.40	188.6	12.272	0.503	0.677	0.889	1.180	1.508	2.030	2.610
2,2,4-trimethyl pentane (isooctane)	$(CH_2)_3CCH_2CH(CH_3)_2$	114.23	210.6	5.76			0.596				
Toluene	$CH_3{\cdot}C_6H_5$	92.13	231.1	7.261	0.174	0.213	0.309	0.425	0.580	0.773	1.006
Vinyl acetate	$CH_2:CHOOCCH_3$	86.09	162.5	7.817	0.735	0.986	1.296	1.721	2.262	3.113	4.022
Vinylidene chloride	$CH_2:CCl_2$	96.5	89.1	10.383	4.990	6.344	7.930	9.806	11.799	15.280	23.210

[a] Reference 11.

Table 7.1-4. ASTM DISTILLATION SLOPE FOR SELECTED REFINED PETROLEUM STOCKS[a]

Refined Petroleum Stock	Reid Vapor Pressure, RVP (psi)	ASTM-D86 Distillation Slope At 10 Volume Percent Evaporated, (°F/vol%)
Aviation gasoline	ND	2.0
Naphtha	2-8	2.5
Motor gasoline	ND	3.0
Light naphtha	9-14	3.5

[a] Reference 8. ND = no data.

Table 7.1-5. VAPOR PRESSURE EQUATION CONSTANTS FOR ORGANIC LIQUIDS[a]

Name	Vapor Pressure Equation Constants		
	A	B	C
	(Dimensionless)	(°C)	(°C)
Acetaldehyde	8.005	1600.017	291.809
Acetic acid	7.387	1533.313	222.309
Acetic anhydride	7.149	1444.718	199.817
Acetone	7.117	1210.595	229.664
Acetonitrile	7.119	1314.4	230
Acrylamide	11.2932	3939.877	273.16
Acrylic acid	5.652	648.629	154.683
Acrylonitrile	7.038	1232.53	222.47
Aniline	7.32	1731.515	206.049
Benzene	6.905	1211.033	220.79
Butanol (iso)	7.4743	1314.19	186.55
Butanol-(1)	7.4768	1362.39	178.77
Carbon disulfide	6.942	1169.11	241.59
Carbon tetrachloride	6.934	1242.43	230
Chlorobenzene	6.978	1431.05	217.55
Chloroform	6.493	929.44	196.03
Chloroprene	6.161	783.45	179.7
Cresol(m-)	7.508	1856.36	199.07
Cresol(o-)	6.911	1435.5	165.16
Cresol(p-)	7.035	1511.08	161.85
Cumene (isopropylbenzene)	6.93666	1460.793	207.78
Cyclohexane	6.841	1201.53	222.65
Cyclohexanol	6.255	912.87	109.13
Cyclohexanone	7.8492	2137.192	273.16
Dichloroethane(1,2)	7.025	1272.3	222.9
Dichloroethylene(1,2)	6.965	1141.9	231.9
Diethyl (N,N) anilin	7.466	1993.57	218.5
Dimethyl formamide	6.928	1400.87	196.43
Dimethyl hydrazine (1,1)	7.408	1305.91	225.53
Dimethyl phthalate	4.522	700.31	51.42
Dinitrobenzene	4.337	229.2	-137
Dioxane(1,4)	7.431	1554.68	240.34
Epichlorohydrin	8.2294	2086.816	273.16
Ethanol	8.321	1718.21	237.52
Ethanolamine(mono-)	7.456	1577.67	173.37
Ethyl acetate	7.101	1244.95	217.88
Ethyl acrylate	7.9645	1897.011	273.16
Ethyl benzene	6.975	1424.255	213.21
Ethyl chloride	6.986	1030.01	238.61
Ethyl ether	6.92	1064.07	228.8
Formic acid	7.581	1699.2	260.7
Furan	6.975	1060.87	227.74
Furfural	6.575	1198.7	162.8

Table 7.1-5. (cont.)

Name	Vapor Pressure Equation Constants		
	A	B	C
	(Dimensionless)	(°C)	(°C)
Heptane(iso)	6.8994	1331.53	212.41
Hexane(-N)	6.876	1171.17	224.41
Hexanol(-1)	7.86	1761.26	196.66
Hydrocyanic acid	7.528	1329.5	260.4
Isopropyl alcohol	8.1177	1580.92	219.61
Methanol	7.897	1474.08	229.13
Methyl acetate	7.065	1157.63	219.73
Methyl ethyl ketone	6.8645	1150.207	209.246
Methyl isobutyl ketone	6.672	1168.4	191.9
Methyl methacrylate	8.409	2050.5	274.4
Methyl styrene (alpha)	6.923	1486.88	202.4
Methylene chloride	7.409	1325.9	252.6
Morpholine	7.7181	1745.8	235
Naphthalene	7.37	1968.36	222.61
Nitrobenzene	7.115	1746.6	201.8
Pentachloroethane	6.74	1378	197
Phenol	7.133	1516.79	174.95
Picoline(-2)	7.032	1415.73	211.63
Propanol (iso)	8.117	1580.92	219.61
Propylene glycol	8.2082	2085.9	203.540
Propylene oxide	7.0671	1133.267	236.1054
Pyridine	7.041	1373.8	214.98
Resorcinol	6.9243	1884.547	186.060
Styrene	7.14	1574.51	224.09
Tetrachloroethane(1,1,1,2)	6.898	1365.88	209.74
Tetrachloroethane(1,1,2,2)	6.631	1228.1	179.9
Tetrachloroethylene	6.98	1386.92	217.53
Tetrahydrofuran	6.995	1202.29	226.25
Toluene	6.954	1344.8	219.48
Trichloro(1,1,2)trifluoroethane	6.88	1099.9	227.5
Trichloroethane(1,1,1)	8.643	2136.6	302.8
Trichloroethane(1,1,2)	6.951	1314.41	209.2
Trichloroethylene	6.518	1018.6	192.7
Trichlorofluoromethane	6.884	1043.004	236.88
Trichloropropane(1,2,3)	6.903	788.2	243.23
Vinyl acetate	7.21	1296.13	226.66
Vinylidene chloride	6.972	1099.4	237.2
Xylene(m-)	7.009	1426.266	215.11
Xylene(o-)	6.998	1474.679	213.69
Xylene(p-)	7.02	1474.40	217.77

[a]Reference 12.

Table 7.1-6. PAINT SOLAR ABSORPTANCE FOR FIXED ROOF TANKS[a]

Paint Color	Paint Shade or Type	Paint Factors (α)	
		Paint Condition	
		Good	Poor
Aluminum	Specular	0.39	0.49
Aluminum	Diffuse	0.60	0.68
Aluminum[b]	Mill finish, unpainted	0.10	0.15
Beige/Cream		0.35	0.49
Black[c]		0.97	0.97
Brown		0.58	0.67
Gray	Light	0.54	0.63
Gray	Medium	0.68	0.74
Green	Dark	0.89	0.91
Red	Primer	0.89	0.91
Rust	Red iron oxide	0.38	0.50
Tan		0.43	0.55
White	NA	0.17	0.34

Notes:

[a] Reference 8. If specific information is not available, a white shell and roof, with the paint in good condition, can be assumed to represent the most common or typical tank surface in use. If the tank roof and shell are painted a different color, α is determined from $\alpha = (\alpha_R + \alpha_S)/2$; where α_R is the tank roof paint solar absorptance and α_S is the tank shell paint solar absorptance.

[b] This refers to aluminum as the base metal, rather than aluminum-colored paint.

[c] EPA added the color black to the table March, 2008.

NA = not applicable.

Table 7.1-7. METEOROLOGICAL DATA (T_{AX}, T_{AN}, I) FOR SELECTED U.S. LOCATIONS[a]

Location	Property		Monthly Averages												Annual Average
	Symbol	Units	Jan.	Feb.	Mar.	Apr.	May	June	July	Aug.	Sept.	Oct.	Nov.	Dec.	
Birmingham, AL	T_{AX}	°F	52.7	57.3	65.2	75.2	81.6	87.9	90.3	89.7	84.6	74.8	63.7	35.2	73.2
	T_{AN}	°F	33.0	35.2	42.1	50.4	58.3	65.9	69.8	69.1	63.6	50.4	40.5	55.9	51.1
	I	Btu/ft^2·d	707	967	1296	1674	1857	1919	1810	1724	1455	1211	858	661	1345
Montgomery, AL	T_{AX}	°F	57.0	60.9	68.1	77.0	83.6	89.8	91.5	91.2	86.9	77.5	67.0	59.8	75.9
	T_{AN}	°F	36.4	38.8	45.5	53.3	61.1	68.4	71.8	71.1	66.4	53.1	43.0	37.9	53.9
	I	Btu/ft^2·d	752	1013	1341	1729	1897	1972	1841	1746	1468	1262	915	719	1388
Homer, AK	T_{AX}	°F	27.0	31.2	34.4	42.1	49.8	56.3	60.5	60.3	54.8	44.0	34.9	27.7	43.6
	T_{AN}	°F	14.4	17.4	19.3	28.1	34.6	41.2	45.1	45.2	39.7	30.6	22.8	15.8	29.5
	I	Btu/ft^2·d	122	334	759	1248	1583	1751	1598	1189	791	437	175	64	838
Phoenix, AZ	T_{AX}	°F	65.2	69.7	74.5	83.1	92.4	102.3	105.0	102.3	98.2	87.7	74.3	66.4	85.1
	T_{AN}	°F	39.4	42.5	46.7	53.0	61.5	70.6	79.5	77.5	70.9	59.1	46.9	40.2	57.3
	I	Btu/ft^2·d	1021	1374	1814	2355	2677	2739	2487	2293	2015	1577	1151	932	1869
Tucson, AZ	T_{AX}	°F	64.1	67.4	71.8	80.1	88.8	98.5	98.5	95.9	93.5	84.1	72.2	65.0	81.7
	T_{AN}	°F	38.1	40.0	43.8	49.7	57.5	67.4	73.8	72.0	67.3	56.7	45.2	39.0	54.2
	I	Btu/ft^2·d	1099	1432	1864	2363	2671	2730	2341	2183	1979	1602	1208	996	1872
Fort Smith, AR	T_{AX}	°F	48.4	53.8	62.5	73.7	81.0	88.5	93.6	92.9	85.7	75.9	61.9	52.1	72.5
	T_{AN}	°F	26.6	30.9	38.5	49.1	58.2	66.3	70.5	68.9	62.1	49.0	37.7	30.2	49.0
	I	Btu/ft^2·d	744	999	1312	1616	1912	2089	2065	1877	1502	1201	851	682	1404
Little Rock, AR	T_{AX}	°F	49.8	54.5	63.2	73.8	81.7	89.5	92.7	92.3	85.6	75.8	62.4	53.2	72.9
	T_{AN}	°F	29.9	33.6	41.2	50.9	59.2	67.5	71.4	69.6	63.0	50.4	40.0	33.2	50.8
	I	Btu/ft^2·d	731	1003	1313	1611	1929	2107	2032	1861	1518	1228	847	674	1404
Bakersfield, CA	T_{AX}	°F	57.4	63.7	68.6	75.1	83.9	92.2	98.8	96.4	90.8	81.0	67.4	57.6	77.7
	T_{AN}	°F	38.9	42.6	45.5	50.1	57.2	64.3	70.1	68.5	63.8	54.9	44.9	38.7	53.3
	I	Btu/ft^2·d	766	1102	1595	2095	2509	2749	2684	2421	1992	1458	942	677	1749
Long Beach, CA	T_{AX}	°F	66.0	67.3	68.0	70.9	73.4	77.4	83.0	83.8	82.5	78.4	72.7	67.4	74.2
	T_{AN}	°F	44.3	45.9	47.7	50.8	55.2	58.9	62.6	64.0	61.6	56.6	49.6	44.7	53.5
	I	Btu/ft^2·d	928	1215	1610	1938	2065	2140	2300	2100	1701	1326	1004	847	1598
Los Angeles AP, CA	T_{AX}	°F	64.6	65.5	65.1	66.7	69.1	72.0	75.3	76.5	76.4	74.0	70.3	66.1	70.1
	T_{AN}	°F	47.3	48.6	49.7	52.2	55.7	59.1	62.6	64.0	62.5	58.5	52.1	47.8	55.0
	I	Btu/ft^2·d	926	1214	1619	1951	2060	2119	2308	2080	1681	1317	1004	849	1594
Sacramento, CA	T_{AX}	°F	52.6	59.4	64.1	71.0	79.7	87.4	93.3	91.7	87.6	77.7	63.2	53.2	73.4
	T_{AN}	°F	37.9	41.2	42.4	45.3	50.1	55.1	57.9	57.6	55.8	50.0	42.8	37.9	47.8
	I	Btu/ft^2·d	597	939	1458	2004	2435	2684	2688	2368	1907	1315	782	538	1643
San Francisco AP, CA	T_{AX}	°F	55.5	59.0	60.6	63.0	66.3	69.6	71.0	71.8	73.4	70.0	62.7	56.3	64.9
	T_{AN}	°F	41.5	44.1	44.9	46.6	49.3	52.0	53.3	54.2	54.3	51.2	46.3	42.2	48.3
	I	Btu/ft^2·d	708	1009	1455	1920	2226	2377	2392	2117	1742	1226	821	642	1608

Table 7.1-7 (cont.).

Location	Property		Monthly Averages												Annual Average
	Symbol	Units	Jan.	Feb.	Mar.	Apr.	May	June	July	Aug.	Sept.	Oct.	Nov.	Dec.	
Santa Maria, CA	T_{AX}	°F	62.8	64.2	63.9	65.6	67.3	69.9	72.1	72.8	74.2	73.3	68.9	64.6	68.3
	T_{AN}	°F	38.8	40.3	40.9	42.7	46.2	49.6	52.4	53.2	51.8	47.6	42.1	38.3	45.3
	I	Btu/ft^2·d	854	1141	1582	1921	2141	2349	2341	2106	1730	1353	974	804	1608
Denver, CO	T_{AX}	°F	43.1	46.9	51.2	61.0	70.7	81.6	88.0	85.8	77.5	66.8	52.4	46.1	64.3
	T_{AN}	°F	15.9	20.2	24.7	33.7	43.6	52.4	58.7	57.0	47.7	36.9	25.1	18.9	36.2
	I	Btu/ft^2·d	840	1127	1530	1879	2135	2351	2273	2044	1727	1301	884	732	1568
Grand Junction, CO	T_{AX}	°F	35.7	44.5	54.1	65.2	76.2	87.9	94.0	90.3	81.9	68.7	51.0	38.7	65.7
	T_{AN}	°F	15.2	22.4	29.7	38.2	48.0	56.6	63.8	61.5	52.2	41.1	28.2	17.9	39.6
	I	Btu/ft^2·d	791	1119	1554	1986	2380	2599	2465	2182	1834	1345	918	731	1659
Wilmington, DE	T_{AX}	°F	39.2	41.8	50.9	63.0	72.7	81.2	85.6	84.1	77.8	66.7	54.8	43.6	63.5
	T_{AN}	°F	23.2	24.6	32.6	41.8	51.7	61.2	66.3	65.4	58.0	45.9	36.4	27.3	44.5
	I	Btu/ft^2·d	571	827	1149	1480	1710	1883	1823	1615	1318	984	645	489	1208
Atlanta, GA	T_{AX}	°F	51.2	55.3	63.2	73.2	79.8	85.6	87.9	87.6	82.3	72.9	62.6	54.1	71.3
	T_{AN}	°F	32.6	34.5	41.7	50.4	58.7	65.9	69.2	68.7	63.6	51.4	41.3	34.8	51.1
	I	Btu/ft^2·d	718	969	1304	1686	1854	1914	1812	1709	1422	1200	883	674	1345
Savannah, GA	T_{AX}	°F	60.3	63.1	69.9	77.8	84.2	88.6	90.8	90.1	85.6	77.8	69.5	62.5	76.7
	T_{AN}	°F	37.9	40.0	46.8	54.1	62.3	68.5	71.5	71.4	67.6	55.9	45.5	39.4	55.1
	I	Btu/ft^2·d	795	1044	1399	1761	1852	1844	1784	1621	1364	1217	941	754	1365
Honolulu, HI	T_{AX}	°F	79.9	80.4	81.4	82.7	84.8	86.2	87.1	88.3	88.2	86.7	83.9	81.4	84.2
	T_{AN}	°F	65.3	65.3	67.3	68.7	70.2	71.9	73.1	73.6	72.9	72.2	69.2	66.5	69.7
	I	Btu/ft^2·d	1180	1396	1622	1796	1949	2004	2002	1967	1810	1540	1266	1133	1639
Chicago, IL	T_{AX}	°F	29.2	33.9	44.3	58.8	70.0	48.1	79.4	83.3	82.1	75.5	64.1	48.2	35.0	58.7
	T_{AN}	°F	13.6	18.1	27.6	38.8	1789	57.7	62.7	61.7	53.9	42.9	31.4	20.3	39.7
	I	Btu/ft^2·d	507	760	1107	1459		2007	1944	1719	1354	969	566	402	1215
Springfield, IL	T_{AX}	°F	32.8	38.0	48.9	64.0	74.6	84.1	87.1	84.7	79.3	67.5	51.2	38.4	62.6
	T_{AN}	°F	16.3	20.9	30.3	42.6	52.5	62.0	65.9	63.7	55.8	44.4	32.9	23.0	42.5
	I	Btu/ft^2·d	585	861	1143	1515	1866	2097	2058	1806	1454	1068	677	490	1302
Indianapolis, IN	T_{AX}	°F	34.2	38.5	49.3	63.1	73.4	82.3	85.2	83.7	77.9	66.1	50.8	39.2	62.0
	T_{AN}	°F	17.8	21.1	30.7	41.7	51.5	60.9	64.9	62.7	55.3	43.4	32.8	23.7	42.2
	I	Btu/ft^2·d	496	747	1037	1398	1638	1868	1806	1644	1324	977	579	417	1165
Wichita, KS	T_{AX}	°F	39.8	46.1	55.8	68.1	77.1	87.4	92.9	91.5	82.0	71.2	55.1	44.6	67.6
	T_{AN}	°F	19.4	24.1	32.4	44.5	54.6	64.7	69.8	67.9	59.2	46.9	33.5	24.2	45.1
	I	Btu/ft^2·d	784	1058	1406	1783	2036	2264	2239	2032	1616	1250	871	690	1502

Table 7.1-7 (cont.).

Location	Property		Monthly Averages												Annual Average
	Symbol	Units	Jan.	Feb.	Mar.	Apr.	May	June	July	Aug.	Sept.	Oct.	Nov.	Dec.	
Louisville, KY	T_{AX}	°F	40.8	45.0	54.9	67.5	76.2	84.0	87.6	86.7	80.6	69.2	55.5	45.4	66.1
	T_{AN}	°F	24.1	26.8	35.2	45.6	54.6	63.3	67.5	66.1	59.1	46.2	36.6	28.9	46.2
	I	Btu/ft^2·d	546	789	1102	1467	1720	1904	1838	1680	1361	1042	653	488	1216
Baton Rouge, LA	T_{AX}	°F	61.1	64.5	71.6	79.2	85.2	90.6	91.4	90.8	87.4	80.1	70.1	63.8	78.0
	T_{AN}	°F	40.5	42.7	49.4	57.5	64.3	70.0	72.8	72.0	68.3	56.3	47.2	42.3	57.0
	I	Btu/ft^2·d	785	1054	1379	1681	1871	1926	1746	1677	1464	1301	920	737	1379
Lake Charles, LA	T_{AX}	°F	60.8	64.0	70.5	77.8	84.1	89.4	91.0	90.8	87.5	80.8	70.5	64.0	77.6
	T_{AN}	°F	42.2	44.5	50.8	58.9	65.6	71.4	73.5	72.8	68.9	57.7	48.9	43.8	58.3
	I	Btu/ft^2·d	728	1010	1313	1570	1849	1970	1788	1657	1485	1381	917	706	1365
New Orleans, LA	T_{AX}	°F	61.8	64.6	71.2	78.6	84.5	89.5	90.7	90.2	86.8	79.4	70.1	64.4	77.7
	T_{AN}	°F	43.0	44.8	51.6	58.8	65.3	70.9	73.5	73.1	70.1	59.0	49.9	44.8	58.7
	I	Btu/ft^2·d	835	1112	1415	1780	1968	2004	1814	1717	1514	1335	973	779	1437
Detroit, MI	T_{AX}	°F	30.6	33.5	43.4	57.7	69.4	79.0	83.1	81.5	74.4	62.5	47.6	35.4	58.2
	T_{AN}	°F	16.1	18.0	26.5	36.9	46.7	56.3	60.7	59.4	52.2	41.2	31.4	21.6	38.9
	I	Btu/ft^2·d	417	680	1000	1399	1716	1866	1835	1576	1253	876	478	344	1120
Grand Rapids, MI	T_{AX}	°F	29.0	31.7	41.6	56.9	69.4	78.9	83.0	81.1	73.4	61.4	46.0	33.8	57.2
	T_{AN}	°F	14.9	15.6	24.5	35.6	45.5	55.3	59.8	58.1	50.8	40.4	30.9	20.7	37.7
	I	Btu/ft^2·d	370	648	1014	1412	1755	1957	1914	1676	1262	858	446	311	1135
Minneapolis-St. Paul, MN	T_{AX}	°F	19.9	26.4	37.5	56.0	69.4	78.5	83.4	80.9	71.0	59.7	41.1	26.7	54.2
	T_{AN}	°F	2.4	8.5	20.8	36.0	47.6	57.7	62.7	60.3	50.2	39.4	25.3	11.7	35.2
	I	Btu/ft^2·d	464	764	1104	1442	1737	1928	1970	1687	1255	860	480	353	1170
Jackson, MS	T_{AX}	°F	56.5	60.9	68.4	77.3	84.1	90.5	92.5	92.1	87.6	78.6	67.5	60.0	76.3
	T_{AN}	°F	34.9	37.2	44.2	52.9	60.8	67.9	71.3	70.2	65.1	51.4	42.3	37.1	52.9
	I	Btu/ft^2·d	754	1026	1369	1708	1941	2024	1909	1781	1509	1271	902	709	1409
Billings, MT	T_{AX}	°F	29.9	37.9	44.0	55.9	66.4	76.3	86.6	84.3	72.3	61.0	44.4	36.0	57.9
	T_{AN}	°F	11.8	18.8	23.6	33.2	43.3	51.6	58.0	56.2	46.5	37.5	25.5	18.2	35.4
	I	Btu/ft^2·d	486	763	1190	1526	1913	2174	2384	2022	1470	987	561	421	1325
Las Vegas, NV	T_{AX}	°F	56.0	62.4	68.3	77.2	87.4	98.6	104.5	101.9	94.7	81.5	66.0	57.1	79.6
	T_{AN}	°F	33.0	37.7	42.3	49.8	59.0	68.6	75.9	73.9	65.6	53.5	41.2	33.6	52.8
	I	Btu/ft^2·d	978	1340	1824	2319	2646	2778	2588	2355	2037	1540	1086	881	1864
Newark, NJ	T_{AX}	°F	38.2	40.3	49.1	61.3	71.6	80.6	85.6	84.0	76.9	66.0	54.0	42.3	62.5
	T_{AN}	°F	24.2	25.3	33.3	42.9	53.0	62.4	67.9	67.0	59.4	48.3	39.0	28.6	45.9
	I	Btu/ft^2·d	552	793	1109	1449	1687	1795	1760	1565	1273	951	596	454	1165

Table 7.1-7 (cont.).

Location	Property		Monthly Averages												Annual Average
	Symbol	Units	Jan.	Feb.	Mar.	Apr.	May	June	July	Aug.	Sept.	Oct.	Nov.	Dec.	
Roswell, NM	T_{AX}	°F	55.4	60.4	67.7	76.9	85.0	93.1	93.7	91.3	84.9	75.8	63.1	56.7	75.3
	T_{AN}	°F	27.4	31.4	37.9	46.8	55.6	64.8	69.0	67.0	59.6	47.5	35.0	28.2	47.5
	I	Btu/ft^2·d	1047	1373	1807	2218	2459	2610	2441	2242	1913	1527	1131	952	1810
Buffalo, NY	T_{AX}	°F	30.0	31.4	40.4	54.4	65.9	75.6	80.2	78.2	71.4	60.2	47.0	35.0	55.8
	T_{AN}	°F	17.0	17.5	25.6	36.3	46.3	56.4	61.2	59.6	52.7	42.7	33.6	22.5	39.3
	I	Btu/ft^2·d	349	546	889	1315	1597	1804	1776	1513	1152	784	403	283	1034
New York, NY (LaGuardia Airport)	T_{AX}	°F	37.4	39.2	47.3	59.6	69.7	78.7	83.9	82.3	75.2	64.5	52.9	41.5	61.0
	T_{AN}	°F	26.1	27.3	34.6	44.2	53.7	63.2	68.9	68.2	61.2	50.5	41.2	30.8	47.5
	I	Btu/ft^2·d	548	795	1118	1457	1690	1802	1784	1583	1280	951	593	457	1171
Cleveland, OH	T_{AX}	°F	32.5	34.8	44.8	57.9	68.5	78.0	81.7	80.3	74.2	62.7	49.3	37.5	58.5
	T_{AN}	°F	18.5	19.9	28.4	38.3	47.9	57.2	61.4	60.5	54.0	43.6	34.3	24.6	40.7
	I	Btu/ft^2·d	388	601	922	1350	1681	1843	1828	1583	1240	867	466	318	1091
Columbus, OH	T_{AX}	°F	34.7	38.1	49.3	62.3	72.6	81.3	84.4	83.0	76.9	65.0	50.7	39.4	61.5
	T_{AN}	°F	19.4	21.5	30.6	40.5	50.2	59.0	63.2	61.7	54.6	42.8	33.5	24.7	41.8
	I	Btu/ft^2·d	459	677	980	1353	1647	1813	1755	1641	1282	945	538	387	1123
Toledo, OH	T_{AX}	°F	30.7	34.0	44.6	59.1	70.5	79.9	83.4	81.8	75.1	63.3	47.9	35.5	58.8
	T_{AN}	°F	15.5	17.5	26.1	36.5	46.6	56.0	60.2	58.4	51.2	40.1	30.6	20.6	38.3
	I	Btu/ft^2·d	435	680	997	1384	1717	1878	1849	1616	1276	911	498	355	1133
Oklahoma City, OK	T_{AX}	°F	46.6	52.2	61.0	71.7	79.0	87.6	93.5	92.8	84.7	74.3	59.9	50.7	71.2
	T_{AN}	°F	25.2	29.4	37.1	48.6	57.7	66.3	70.6	69.4	61.9	50.2	37.6	29.1	48.6
	I	Btu/ft^2·d	801	1055	1400	1725	1918	2144	2128	1950	1554	1233	901	725	1461
Tulsa, OK	T_{AX}	°F	45.6	51.9	60.8	72.4	79.7	87.9	93.9	93.0	85.0	74.9	60.2	50.3	71.3
	T_{AN}	°F	24.8	29.5	37.7	49.5	58.5	67.5	72.4	70.3	62.5	50.3	38.1	29.3	49.2
	I	Btu/ft^2·d	732	978	1306	1603	1822	2021	2031	1865	1473	1164	827	659	1373
Astoria, OR	T_{AX}	°F	46.8	50.6	51.9	55.5	60.2	63.9	67.9	68.6	67.8	61.4	53.5	48.8	58.1
	T_{AN}	°F	35.4	37.1	36.9	39.7	44.1	49.2	52.2	52.6	49.2	44.3	39.7	37.3	43.1
	I	Btu/ft^2·d	315	545	866	1253	1608	1626	1746	1499	1183	713	387	261	1000
Portland, OR	T_{AX}	°F	44.3	50.4	54.5	60.2	66.9	72.7	79.5	78.6	74.2	63.9	52.3	46.4	62.0
	T_{AN}	°F	33.5	36.0	37.4	40.6	46.4	52.2	55.8	55.8	51.1	44.6	38.6	35.4	44.0
	I	Btu/ft^2·d	310	554	895	1308	1663	1773	2037	1674	1217	724	388	260	1067
Philadelphia, PA	T_{AX}	°F	38.6	41.1	50.5	63.2	73.0	81.7	86.1	84.6	77.8	66.5	54.5	43.0	63.4
	T_{AN}	°F	23.8	25.0	33.1	42.6	52.5	61.5	66.8	66.0	58.6	46.5	37.1	28.0	45.1
	I	Btu/ft^2·d	555	795	1108	1434	1660	1811	1758	1575	1281	959	619	470	1169

Table 7.1-7 (cont.).

Location	Property		Monthly Averages												Annual Average
	Symbol	Units	Jan.	Feb.	Mar.	Apr.	May	June	July	Aug.	Sept.	Oct.	Nov.	Dec.	
Pittsburgh, PA	T_{AX}	°F	34.1	36.8	47.6	60.7	70.8	79.1	82.7	81.1	74.8	62.9	49.8	38.4	59.9
	T_{AN}	°F	19.2	20.7	29.4	39.4	48.5	57.1	61.3	60.1	53.3	42.1	33.3	24.3	40.7
	I	Btu/ft^2·d	424	625	943	1317	1602	1762	1689	1510	1209	895	505	347	1069
Providence, RI	T_{AX}	°F	36.4	37.7	45.5	57.5	67.6	76.6	81.7	80.3	73.1	63.2	51.9	40.5	59.3
	T_{AN}	°F	20.0	20.9	29.2	38.3	47.6	57.0	63.3	61.9	53.8	43.1	34.8	24.1	41.2
	I	Btu/ft^2·d	506	739	1032	1374	1655	1776	1695	1499	1209	907	538	419	1112
Columbia, SC	T_{AX}	°F	56.2	59.5	67.1	77.0	83.8	89.2	91.9	91.0	85.5	76.5	67.1	58.8	75.3
	T_{AN}	°F	33.2	34.6	41.9	50.5	59.1	66.1	70.1	69.4	63.9	50.3	40.6	34.7	51.2
	I	Btu/ft^2·d	762	1021	1355	1747	1895	1947	1842	1703	1439	1211	921	722	1380
Sioux Falls, SD	T_{AX}	°F	22.9	29.3	40.1	58.1	70.5	80.3	86.2	83.9	73.5	62.1	43.7	29.3	56.7
	T_{AN}	°F	1.9	8.9	20.6	34.6	45.7	56.3	61.8	59.7	48.5	36.7	22.3	10.1	33.9
	I	Btu/ft^2·d	533	802	1152	1543	1894	2100	2150	1845	1410	1005	608	441	1290
Memphis, TN	T_{AX}	°F	48.3	53.0	61.4	72.9	81.0	88.4	91.5	90.3	84.3	74.5	61.4	52.3	71.6
	T_{AN}	°F	30.9	34.1	41.9	52.2	60.9	68.9	72.6	70.8	64.1	51.3	41.1	34.3	51.9
	I	Btu/ft^2·d	683	945	1278	1639	1885	2045	1972	1824	1471	1205	817	629	1366
Amarillo, TX	T_{AX}	°F	49.1	53.1	60.8	71.0	79.1	88.2	91.4	89.6	82.4	72.7	58.7	51.8	70.7
	T_{AN}	°F	21.7	26.1	32.0	42.0	51.9	61.5	66.2	64.5	56.9	45.5	32.1	24.8	43.8
	I	Btu/ft^2·d	960	1244	1631	2019	2212	2393	2281	2103	1761	1404	1033	872	1659
Corpus Christi, TX	T_{AX}	°F	66.5	69.9	76.1	82.1	86.7	91.2	94.2	94.1	90.1	83.9	75.1	69.3	81.6
	T_{AN}	°F	46.1	48.7	55.7	63.9	69.5	74.1	75.6	75.8	72.8	64.1	54.9	48.8	62.5
	I	Btu/ft^2·d	898	1147	1430	1642	1866	2094	2186	1991	1687	1416	1043	845	1521
Dallas, TX	T_{AX}	°F	54.0	59.1	67.2	76.8	84.4	93.2	97.8	97.3	89.7	79.5	66.2	58.1	76.9
	T_{AN}	°F	33.9	37.8	44.9	55.0	62.9	70.8	74.7	73.7	67.5	56.3	44.9	37.4	55.0
	I	Btu/ft^2·d	822	1071	1422	1627	1889	2135	2122	1950	1587	1276	936	780	1468
Houston, TX	T_{AX}	°F	61.9	65.7	72.1	79.0	85.1	90.9 70.2	93.6	93.1	88.7	81.9	71.6	65.2	79.1
	T_{AN}	°F	40.8	43.2	49.8	58.3	64.7	1898	72.5	72.1	68.1	57.5	48.6	42.7	57.4
	I	Btu/ft^2·d	772	1034	1297	1522	1775		1828	1686	1471	1276	924	730	1351
Midland-Odessa, TX	T_{AX}	°F	57.6	62.1	69.8	78.8	86.0	93.0	94.2	93.1	86.4	77.7	65.5	59.7	77.0
	T_{AN}	°F	29.7	33.3	40.2	49.4	58.2	66.6	69.2	68.0	61.9	51.1	39.0	32.2	49.9
	I	Btu/ft^2·d	1081	1383	1839	2192	2430	2562	2389	2210	1844	1522	1176	1000	1802
Salt Lake City, UT	T_{AX}	°F	37.4	43.7	51.5	61.1	72.4	83.3	93.2	90.0	80.0	66.7	50.2	38.9	64.0
	T_{AN}	°F	19.7	24.4	29.9	37.2	45.2	53.3	61.8	59.7	50.0	39.3	29.2	21.6	39.3
	I	Btu/ft^2·d	639	989	1454	1894	2362	2561	2590	2254	1843	1293	788	570	1603

Table 7.1-7 (cont.).

Location	Property		Monthly Averages												Annual Average
	Symbol	Units	Jan.	Feb.	Mar.	Apr.	May	June	July	Aug.	Sept.	Oct.	Nov.	Dec.	
Richmond, VA	T_{AX}	°F	46.7	49.6	58.5	70.6	77.9	84.8	88.4	87.1	81.0	70.5	60.5	50.2	68.8
	T_{AN}	°F	26.5	28.1	35.8	45.1	54.2	62.2	67.2	66.4	59.3	46.7	37.3	29.6	46.5
	I	Btu/ft^2 day	632	877	1210	1566	1762	1872	1774	1601	1348	1033	733	567	1248
Seattle, WA (Sea-Tac Airport)	T_{AX}	°F	43.9	48.8	51.1	56.8	64.0	69.2	75.2	73.9	68.7	59.5	50.3	45.6	58.9
	T_{AN}	°F	34.3	36.8	37.2	40.5	46.0	51.1	54.3	54.3	51.2	45.3	39.3	36.3	43.9
	I	Btu/ft^2 day	262	495	849	1294	1714	1802	2248	1616	1148	656	337	211	1053
Charleston, WV	T_{AX}	°F	41.8	45.4	55.4	67.3	76.0	82.5	85.2	84.2	78.7	67.7	55.6	45.9	65.5
	T_{AN}	°F	23.9	25.8	34.1	43.3	51.8	59.4	63.8	63.1	56.4	44.0	35.0	27.8	44.0
	I	Btu/ft^2 day	498	707	1010	1356	1639	1776	1683	1514	1272	972	613	440	1123
Huntington, WV	T_{AX}	°F	41.1	45.0	55.2	67.2	75.7	82.6	85.6	84.4	78.7	67.6	55.2	45.2	65.3
	T_{AN}	°F	24.5	26.6	35.0	44.4	52.8	60.7	65.1	64.0	57.2	44.9	35.9	28.5	45.0
	I	Btu/ft^2 day	526	757	1067	1448	1710	1844	1769	1580	1306	1004	638	467	1176
Cheyenne, WY	T_{AX}	°F	37.3	40.7	43.6	54.0	64.6	75.4	83.1	80.8	72.1	61.0	46.5	40.4	58.3
	T_{AN}	°F	14.8	17.9	20.6	29.6	39.7	48.5	54.6	52.8	43.7	34.0	23.1	18.2	33.1
	I	Btu/ft^2 day	766	1068	1433	1771	1995	2258	2230	1966	1667	1242	823	671	1491

[a] References 13 and 14

T_{AX} = daily maximum ambient temperature

T_{AN} = daily minimum ambient temperature

I = daily total solar insolation factor

Table 7.1-8. RIM-SEAL LOSS FACTORS, K_{Ra}, K_{Rb}, and n, FOR FLOATING ROOF TANKS[a]

Tank Construction And Rim-Seal System	Average-Fitting Seals		
	K_{Ra} (lb-mole/ft-yr)	K_{Rb} [lb-mole/(mph)^n-ft-yr]	n (dimensionless)
Welded Tanks			
Mechanical-shoe seal			
Primary only[b]	5.8	0.3	2.1
Shoe-mounted secondary	1.6	0.3	1.6
Rim-mounted secondary	0.6	0.4	1.0
Liquid-mounted seal			
Primary only	1.6	0.3	1.5
Weather shield	0.7	0.3	1.2
Rim-mounted secondary	0.3	0.6	0.3
Vapor-mounted seal			
Primary only	6.7[c]	0.2	3.0
Weather shield	3.3	0.1	3.0
Rim-mounted secondary	2.2	0.003	4.3
Riveted Tanks			
Mechanical-shoe seal			
Primary only	10.8	0.4	2.0
Shoe-mounted secondary	9.2	0.2	1.9
Rim-mounted secondary	1.1	0.3	1.5

Note: The rim-seal loss factors K_{Ra}, K_{Rb}, and n may only be used for wind speeds below 15 miles per hour.

[a] Reference 15.
[b] If no specific information is available, a welded tank with an average-fitting mechanical-shoe primary seal can be used to represent the most common or typical construction and rim-seal system in use for external and domed external floating roof tanks.
[c] If no specific information is available, this value can be assumed to represent the most common or typical rim-seal system currently in use for internal floating roof tanks.

Table 7.1-9. AVERAGE ANNUAL WIND SPEED (v) FOR SELECTED U. S. LOCATIONS[a]

Location	Wind Speed (mph)	Location	Wind Speed (mph)	Location	Wind Speed (mph)
Alabama		Arizona (continued)		Delaware	
Birmingham	7.2	Winslow	8.9	Wilmington	9.1
Huntsville	8.2	Yuma	7.8	District of Columbia	
Mobile	9.0			Dulles Airport	7.4
Montgomery	6.6	Arkansas		National Airport	9.4
		Fort Smith	7.6		
Alaska		Little Rock	7.8	Florida	
Anchorage	6.9			Apalachicola	7.8
Annette	10.6	California		Daytona Beach	8.7
Barrow	11.8	Bakersfield	6.4	Fort Meyers	8.1
Barter Island	13.2	Blue Canyon	6.8	Jacksonville	8.0
Bethel	12.8	Eureka	6.8	Key West	11.2
Bettles	6.7	Fresno	6.3	Miami	9.3
Big Delta	8.2	Long Beach	6.4	Orlando	8.5
Cold Bay	17.0	Los Angeles (City)	6.2	Pensacola	8.4
Fairbanks	5.4	Los Angeles Int'l Airport	7.5	Tallahassee	6.3
Gulkana	6.8	Mount Shasta	5.1	Tampa	8.4
Homer	7.6	Sacramento	7.9	West Palm Beach	9.6
Juneau	8.3	San Diego	6.9		
King Salmon	10.8	San Francisco (City)	8.7	Georgia	
Kodiak	10.8	San Francisco Airport	10.6	Athens	7.4
Kotzebue	13.0	Santa Maria	7.0	Atlanta	9.1
McGrath	5.1	Stockton	7.5	Augusta	6.5
Nome	10.7			Columbus	6.7
St. Paul Island	17.7	Colorado		Macon	7.6
Talkeetna	4.8	Colorado Springs	10.1	Savannah	7.9
Valdez	6.0	Denver	8.7		
Yakutat	7.4	Grand Junction	8.1	Hawaii	
		Pueblo	8.7	Hilo	7.2
Arizona				Honolulu	11.4
Flagstaff	6.8	Connecticut		Kahului	12.8
Phoenix	6.3	Bridgeport	12.0	Lihue	12.2
Tucson	8.3	Hartford	8.5		

Table 7.1-9. (cont.)

Location	Wind Speed (mph)	Location	Wind Speed (mph)	Location	Wind Speed (mph)
Idaho		Louisiana		Mississippi	
Boise	8.8	Baton Rouge	7.6	Jackson	7.4
Pocatello	10.2	Lake Charles	8.7	Meridian	6.1
		New Orleans	8.2		
Illinois		Shreveport	8.4	Missouri	
Cairo	8.5			Columbia	9.9
Chicago	10.3	Maine		Kansas City	10.8
Moline	10.0	Caribou	11.2	Saint Louis	9.7
Peoria	10.0	Portland	8.8	Springfield	10.7
Rockford	10.0				
Springfield	11.2	Maryland		Montana	
		Baltimore	9.2	Billings	11.2
Indiana				Glasgow	10.8
Evansville	8.1	Massachusetts		Great Falls	12.8
Fort Wayne	10.0	Blue Hill Observatory	15.4	Helena	7.8
Indianapolis	9.6	Boston	12.5	Kalispell	6.6
South Bend	10.3	Worcester	10.1	Missoula	6.2
Iowa		Michigan		Nebraska	
Des Moines	10.9	Alpena	8.1	Grand Island	11.9
Sioux City	11.0	Detroit	10.4	Lincoln	10.4
Waterloo	10.7	Flint	10.2	Norfolk	11.7
		Grand Rapids	9.8	North Platte	10.2
Kansas		Houghton Lake	8.9	Omaha	10.6
Concordia	12.3	Lansing	10.0	Scottsbuff	10.6
Dodge City	14.0	Muskegon	10.7	Valentine	9.7
Goodland	12.6	Sault Sainte Marie	9.3		
Topeka	10.0			Nevada	
Wichita	12.3	Minnesota		Elko	6.0
		Duluth	11.1	Ely	10.3
Kentucky		International Falls	8.9	Las Vegas	9.3
Cincinnati Airport	9.1	Minneapolis-Saint Paul	10.6	Reno	6.6
Jackson	7.2	Rochester	13.1	Winnemucca	8.0
Lexington	9.3	Saint Cloud	8.0		
Louisville	8.4				

Table 7.1-9. (cont.)

Location	Wind Speed (mph)	Location	Wind Speed (mph)	Location	Wind Speed (mph)
New Hampshire		Ohio		Rhode Island	
Concord	6.7	Akron	9.8	Providence	10.6
Mount Washington	35.3	Cleveland	10.6		
		Columbus	8.5	South Carolina	
New Jersey		Dayton	9.9	Charleston	8.6
Atlantic City	10.1	Mansfield	11.0	Columbia	6.9
Newark	10.2	Toledo	9.4	Greenville-Spartanburg	6.9
		Youngstown	9.9		
New Mexico				South Dakota	
Albuquerque	9.1	Oklahoma		Aberdeen	11.2
Roswell	8.6	Oklahoma City	12.4	Huron	11.5
		Tulsa	10.3	Rapid City	11.3
New York				Sioux Falls	11.1
Albany	8.9	Oregon			
Birmingham	10.3	Astoria	8.6	Tennessee	
Buffalo	12.0	Eugene	7.6	Bristol-Johnson City	5.5
New York (Central Park)	9.4	Medford	4.8	Chattanooga	6.1
New York (JFK Airport)	12.0	Pendleton	8.7	Knoxville	7.0
New York (La Guardia Airport)	12.2	Portland	7.9	Memphis	8.9
Rochester	9.7	Salem	7.1	Nashville	8.0
Syracuse	9.5	Sexton Summit	11.8	Oak Ridge	4.4
North Carolina		Pennsylvania		Texas	
Asheville	7.6	Allentown	9.2	Abilene	12.0
Cape Hatteras	11.1	Avoca	8.3	Amarillo	13.6
Charlotte	7.5	Erie	11.3	Austin	9.2
Greensboro-High Point	7.5	Harrisburg	7.6	Brownsville	11.5
Raleigh	7.8	Philadelphia	9.5	Corpus Christi	12.0
Wilmington	8.8	Pittsburgh Int'l Airport	9.1	Dallas-Fort Worth	10.8
		Williamsport	7.8	Del Rio	9.9
North Dakota				El Paso	8.9
Bismark	10.2	Puerto Rico		Galveston	11.0
Fargo	12.3	San Juan	8.4	Houston	7.9
Williston	10.1			Lubbock	12.4

Table 7.1-9. (cont.)

Location	Wind Speed (mph)	Location	Wind Speed (mph)
Texas (continued)		Wisconsin	
Midland-Odessa	11.1	Green Bay	10.0
Port Arthur	9.8	La Crosse	8.8
San Angelo	10.4	Madison	9.9
San Antonio	9.3	Milwaukee	11.6
Victoria	10.1		
Waco	11.3	Wyoming	
Wichita Falls	11.7	Casper	12.9
		Cheyenne	13.0
Utah		Lander	6.8
Salt Lake City	8.9	Sheridan	8.0
Vermont			
Burlington	8.9		
Virginia			
Lynchburg	7.7		
Norfolk	10.7		
Richmond	7.7		
Roanoke	8.1		
Washington			
Olympia	6.7		
Quillayute	6.1		
Seattle Int'l. Airport	9.0		
Spokane	8.9		
Walla Walla	5.3		
Yakima	7.1		
West Virginia			
Belkley	9.1		
Charleston	6.3		
Elkins	6.2		
Huntington	6.6		

[a] Reference 13.

Table 7.1-10. AVERAGE CLINGAGE FACTORS, C_S[a]
($bbl/10^3\ ft^2$)

Product Stored	Shell Condition		
	Light Rust	Dense Rust	Gunite Lining
Gasoline	0.0015	0.0075	0.15
Single-component stocks	0.0015	0.0075	0.15
Crude oil	0.0060	0.030	0.60

[a] Reference 3. If no specific information is available, the values in this table can be assumed to represent the most common or typical condition of tanks currently in use.

Table 7.1-11. TYPICAL NUMBER OF COLUMNS AS A FUNCTION OF TANK DIAMETER FOR INTERNAL FLOATING ROOF TANKS WITH COLUMN-SUPPORTED FIXED ROOFS[a]

Tank Diameter Range D, (ft)	Typical Number Of Columns, N_C
$0 < D \leq 85$	1
$85 < D \leq 100$	6
$100 < D \leq 120$	7
$120 < D \leq 135$	8
$135 < D \leq 150$	9
$150 < D \leq 170$	16
$170 < D \leq 190$	19
$190 < D \leq 220$	22
$220 < D \leq 235$	31
$235 < D \leq 270$	37
$270 < D \leq 275$	43
$275 < D \leq 290$	49
$290 < D \leq 330$	61
$330 < D \leq 360$	71
$360 < D \leq 400$	81

[a] Reference 4. This table was derived from a survey of users and manufacturers. The actual number of columns in a particular tank may vary greatly with age, fixed roof style, loading specifications, and manufacturing prerogatives. Data in this table should not be used when actual tank data are available.

Table 7.1-12. DECK-FITTING LOSS FACTORS, K_{Fa}, K_{Fb}, AND m, AND TYPICAL NUMBER OF DECK FITTINGS, N_F[a]

Fitting Type And Construction Details	Loss Factors			Typical Number Of Fittings, N_F
	K_{Fa} (lb-mole/yr)	K_{Fb} (lb-mole/(mph)^m-yr)	m (dimensionless)	
Access hatch (24-inch diameter well)				1
Bolted cover, gasketed[b]	1.6	0	0	
Unbolted cover, ungasketed	36[c]	5.9	1.2	
Unbolted cover, gasketed	31	5.2	1.3	
Fixed roof support column well[d]				N_C (Table 7.1-11)
Round pipe, ungasketed sliding cover	31			
Round pipe, gasketed sliding cover	25			
Round pipe, flexible fabric sleeve seal	10			
Built-up column, ungasketed sliding cover[c]	51			
Built-up column, gasketed sliding cover	33			
Unslotted guide-pole and well (8-inch diameter unslotted pole, 21-inch diameter well)				1
Ungasketed sliding cover[b]	31	150	1.4	
Ungasketed sliding cover w/pole	25	2.2	2.1	
sleeveGasketed sliding cover	25	13	2.2	
Gasketed sliding cover w/pole wiper	14	3.7	0.78	
Gasketed sliding cover w/pole sleeve	8.6	12	0.81	
Slotted guide-pole/sample well (8-inch diameter slotted pole, 21-inch diameter well)[e]				f
Ungasketed or gasketed sliding cover	43	270	1.4	
Ungasketed or gasketed sliding cover, with float[g]	31	36	2.0	
Gasketed sliding cover, with pole wiper	41	48	1.4	
Gasketed sliding cover, with pole sleeve	11	46	1.4	
Gasketed sliding cover, with pole sleeve and pole wiper	8.3	4.4	1.6	
Gasketed sliding cover, with float and pole wiper[g]	21	7.9	1.8	
Gasketed sliding cover, with float, pole sleeve, and pole wiper[h]	11	9.9	0.89	
Gauge-float well (automatic gauge)				1
Unbolted cover, ungasketed[b]	14[c]	5.4	1.1	
Unbolted cover, gasketed	4.3	17	0.38	
Bolted cover, gasketed	2.8	0	0	
Gauge-hatch/sample port				1
Weighted mechanical actuation, gasketed[b]	0.47	0.02	0.97	
Weighted mechanical actuation, ungasketed	2.3	0	0	
Slit fabric seal, 10% open area[c]	12			
Vacuum breaker				N_{vb} (Table 7.1-13)[j]
Weighted mechanical actuation, ungasketed	7.8	0.01	4.0	
Weighted mechanical actuation, gasketed[b]	6.2[c]	1.2	0.94	
Deck drain (3-inch diameter)				
Open[b]				1.5
90% closed				1.8
				0.21
				0.14
				1.7
				$1.1N_d$ (Table 7.1-13)

Fitting Type And Construction Details	Loss Factors			Typical Number Of Fittings, N_F
	K_{Fa} (lb-mole/yr)	K_{Fb} (lb-mole/(mph)^m-yr)	m (dimensionless)	
Stub drain (1-inch diameter)[k]	1.2			N_d (Table 7.1-15)
Deck leg (3-inch diameter)				N_l (Table 7.1-15), (Table 7.1-14)
Adjustable, internal floating deck[c]	7.9			
Adjustable, pontoon area - ungasketed[b]	2.0	0.37	0.91	
Adjustable, pontoon area - gasketed	1.3	0.08	0.65	
Adjustable, pontoon area - sock	1.2	0.14	0.65	
Adjustable, center area - ungasketed[b]	0.82	0.53	0.14	
Adjustable, center area - gasketed[m]	0.53	0.11	0.13	
Adjustable, center area - sock[m]	0.49	0.16	0.14	
Adjustable, double-deck roofs	0.82	0.53	0.14	
Fixed	0	0	0	
Rim vent[n]				1
Weighted mechanical actuation, ungasketed	0.68	1.8	1.0	
Weighted mechanical actuation, gasketed[b]	0.71	0.10	1.0	
Ladder well				1[d]
Sliding cover, ungasketed[c]	98			
Sliding cover, gasketed	56			

Note: The deck-fitting loss factors, K_{Fa}, K_{Fb}, and m, may only be used for wind speeds below 15 miles per hour.

[a] Reference 5, unless otherwise indicated.
[b] If no specific information is available, this value can be assumed to represent the most common or typical deck fitting currently in use for external and domed external floating roof tanks.
[c] If no specific information is available, this value can be assumed to represent the most common or typical deck fitting currently in use for internal floating roof tanks.
[d] Column wells and ladder wells are not typically used with self supported fixed roofs.
[e] References 16,19.
[f] A slotted guide-pole/sample well is an optional fitting and is not typically used.
[g] Tests were conducted with floats positioned with the float wiper at and 1 inch above the sliding cover. The user is cautioned against applying these factors to floats that are positioned with the wiper or top of the float below the sliding cover ("short floats"). The emission factor for such a float is expected to be between the factors for a guidepole without a float and with a float, depending upon the position of the float top and/or wiper within the guidepole.
[h] Tests were conducted with floats positioned with the float wiper at varying heights with respect to the sliding cover. This fitting configuration also includes a pole sleeve which restricts the airflow from the well vapor space into the slotted guidepole. Consequently, the float position within the guidepole (at, above, or below the sliding cover) is not expected to significantly affect emission levels for this fitting configuration, since the function of the pole sleeve is to restrict the flow of vapor from the vapor space below the deck into the guidepole.
[j] N_{vb} = 1 for internal floating roof tanks.
[k] Stub drains are not used on welded contact internal floating decks.
[m] These loss factors were derived using the results from pontoon-area deck legs with gaskets and socks.
[n] Rim vents are used only with mechanical-shoe primary seals.

Table 7.1-13. EXTERNAL FLOATING ROOF TANKS: TYPICAL NUMBER OF VACUUM BREAKERS, N_{vb}, AND DECK DRAINS, N_d[a]

Tank Diameter D (feet)[b]	Number Of Vacuum Breakers, N_{vb}		Number Of Deck drains, N_d
	Pontoon Roof	Double-Deck Roof	
50	1	1	1
100	1	1	1
150	2	2	2
200	3	2	3
250	4	3	5
300	5	3	7
350	6	4	ND
400	7	4	ND

[a] Reference 3. This table was derived from a survey of users and manufacturers. The actual number of vacuum breakers may vary greatly depending on throughput and manufacturing prerogatives. The actual number of deck drains may also vary greatly depending on the design rainfall and manufacturing prerogatives. For tanks more than 350 feet in diameter, actual tank data or the manufacturer's recommendations may be needed for the number of deck drains. This table should not be used when actual tank data are available. ND = no data.

[b] If the actual diameter is between the diameters listed, the closest diameter listed should be used. If the actual diameter is midway between the diameters listed, the next larger diameter should be used.

Table 7.1-14. EXTERNAL FLOATING ROOF TANKS: TYPICAL NUMBER OF ROOF LEGS, N_l[a]

Tank Diameter, D (feet)[b]	Pontoon Roof		Number Of Legs On Double-Deck Roof
	Number Of Pontoon Legs	Number Of Center Legs	
30	4	2	6
40	4	4	7
50	6	6	8
60	9	7	10
70	13	9	13
80	15	10	16
90	16	12	20
100	17	16	25
110	18	20	29
120	19	24	34
130	20	28	40
140	21	33	46
150	23	38	52
160	26	42	58
170	27	49	66
180	28	56	74
190	29	62	82
200	30	69	90
210	31	77	98
220	32	83	107
230	33	92	115
240	34	101	127
250	35	109	138
260	36	118	149
270	36	128	162
280	37	138	173
290	38	148	186
300	38	156	200
310	39	168	213
320	39	179	226
330	40	190	240
340	41	202	255
350	42	213	270
360	44	226	285
370	45	238	300
380	46	252	315
390	47	266	330
400	48	281	345

[a] Reference 3. This table was derived from a survey of users and manufacturers. The actual number of roof legs may vary greatly depending on age, style of floating roof, loading specifications, and manufacturing prerogatives. This table should not be used when actual tank data are available.

[b] If the actual diameter is between the diameters listed, the closest diameter listed should be used. If the actual diameter is midway between the diameters listed, the next larger diameter should be used.

Table 7.1-15. INTERNAL FLOATING ROOF TANKS: TYPICAL NUMBER OF DECK LEGS, N_l, AND STUB DRAINS, N_d[a]

Deck fitting type	Typical Number Of Fittings, N_F
Deck leg or hanger well[b]	$(5+\frac{D}{10}+\frac{D^2}{600})$
Stub drain (1-inch diameter)[b,c]	$(\frac{D^2}{125})$

[a] Reference 4
[b] D = tank diameter, ft
[c] Not used on welded contact internal floating decks.

Table 7.1-16. DECK SEAM LENGTH FACTORS (S_D) FOR TYPICAL DECK CONSTRUCTIONS FOR INTERNAL FLOATING ROOF TANKS[a]

Deck Construction	Typical Deck Seam Length Factor, S_D (ft/ft^2)
Continuous sheet construction[b]	
5 ft wide	0.20[c]
6 ft wide	0.17
7 ft wide	0.14
Panel construction[d]	
5 x 7.5 ft rectangular	0.33
5 x 12 ft rectangular	0.28

[a] Reference 4. Deck seam loss applies to bolted decks only.
[b] S_D = 1/W, where W = sheet width (ft).
[c] If no specific information is available, this value can be assumed to represent the most common bolted decks currently in use.
[d] S_D = (L+W)/LW, where W = panel width (ft) and L = panel length (ft).

Table 7.1-17. ROOF LANDING LOSSES FOR INTERNAL FLOATING ROOF TANK WITH A LIQUID HEEL

Standing Idle Loss	$L_{SL} = \frac{P\,V_V}{R\,T} n_d\ K_E\ M_V\ K_S$	Equation 2-16
	$L_{SL} \le 5.9\ D^2\ h_{le}\ W_l$	Equation 2-13
Standing Idle Saturation Factor	$K_S = \frac{1}{1 + 0.053\left(P\,h_v\right)}$	Equation 1-20
	$K_S \le S$	
Filling Loss Equation	$L_{FL} = \left(\frac{P\,V_V}{R\,T}\right) M_V\ S$	Equation 2-26
Filling Saturation Factor (S)	S = 0.60 for a full liquid heel S = 0.50 for a partial liquid heel	

Table 7.1-18. ROOF LANDING LOSSES FOR EXTERNAL FLOATING ROOF TANK WITH A LIQUID HEEL

Standing Idle Loss	$L_{SL} = 0.57\, n_d\, D\, P^*\, M_V$ Equation 2-19 $L_{SL} \le 5.9\, D^2\, h_{le}\, W_l$ Equation 2-13
Standing Idle Saturation Factor	Not applicable
Filling Loss Equation	$L_{FL} = \left(\frac{P\,V_V}{R\,T}\right) M_V \left(C_{sf}\, S\right)$ Equation 2-27 $C_{sf} = 1 - \left(\frac{\left(0.57\, n_d\, D\, P^*\, M_v\right) - \left(n_d\, K_E \left(\frac{P\,V_V}{R\,T}\right) M_V\, K_S\right)}{\left(n_d\, K_E \left(\frac{P\,V_V}{R\,T}\right) M_V\, K_S\right) + \left(M_V\, S \left(\frac{P\,V_V}{R\,T}\right)\right)}\right)$ Equation 2-30
Filling Saturation Factor (S)	S = 0.6 for a full liquid heel S = 0.5 for a partial liquid heel $C_{sf}\, S \ge 0.15$

Table 7.1-19. ROOF LANDING LOSSES FOR ALL DRAIN-DRY TANKS

Standing Idle Loss	$L_{SL} = 0.0063\, W_l \left(\frac{\pi D^2}{4} \right)$ Equation 2-22 $L_{SL} \le 0.60 \left(\frac{P V_V}{R T} \right) M_V$ Equation 2-23
Standing Idle Saturation Factor	Not applicable
Filling Loss Equation	$L_{FL} = \left(\frac{P V_V}{R T} \right) M_V\ S$ Equation 2-26
Filling Saturation Factor (S)	S = 0.15

where:

L_s = standing idle loss per landing episode (lb)
n_d = number of days the tank stands idle with the floating roof landed (dimensionless)
K_E = vapor space expansion factor (dimensionless)

$$K_E = \frac{\Delta T_V}{T} \left(1 + \frac{0.50\, B\, P}{T(P_A - P)} \right)$$

ΔT_v = daily vapor temperature range (°R)
T = average temperature of the vapor and liquid below the floating roof (°R)
B = constant from the vapor pressure equation shown in Equation 1-24 (°R)
P = true vapor pressure of the stock liquid (psia)
P_A = atmospheric pressure at the tank location (psia)
V_V = volume of the vapor space (ft^3)

$$V_V = \frac{h_v\ \pi D^2}{4}$$

h_v = height of the vapor space under the floating roof (ft)
D = tank diameter (ft)
R = ideal gas constant (psia ft^3 / lb-mole R) = 10.731
M_V = stock vapor molecular weight (lb/lb-mole)
K_S = standing idle saturation factor (dimensionless)
S = filling saturation factor (dimensionless)

P^* = vapor pressure function (dimensionless)

$$P^* = \frac{\frac{P_{VA}}{P_A}}{\left[1+\left(1-\frac{P_{VA}}{P_A}\right)^{0.5}\right]^2}$$

W_l = stock liquid density (lb/gal)
h_{le} = effective height of the stock liquid (ft)
L_F = filling loss per landing episode (lb)
C_{sf} = filling saturation correction factor (dimensionless)

7.1.5 Sample Calculations

Example 1 - Chemical Mixture in a Fixed Roof Tank

Determine the yearly emission rate of the total product mixture and each component for a chemical mixture stored in a vertical cone roof tank in Denver, Colorado. The chemical mixture contains (for every 3,171 lb of mixture) 2,812 lb of benzene, 258 lb of toluene, and 101 lb of cyclohexane. The tank is 6 ft in diameter, 12 ft high, usually holds about 8 ft of product, and is painted white. The tank working volume is 1,690 gallons. The number of turnovers per year for the tank is five (i.e., the throughput of the tank is 8,450 gal/yr).

Solution

1. Determine tank type. The tank is a fixed-cone roof, vertical tank.

2. Determine estimating methodology. The product is made up of three organic liquids, all of which are miscible in each other, which makes a homogenous mixture if the material is well mixed. The tank emission rate will be based upon the properties of the mixture. Raoult's Law (as discussed in the HAP Speciation Section) is assumed to apply to the mixture and will be used to determine the properties of the mixture.

3. Select equations to be used. For a vertical, fixed roof storage tank, the following equations apply:

$$L_T = L_S + L_W \quad (1\text{-}1)$$

$$L_S = 365\ W_V V_V K_E K_S \quad (1\text{-}2)$$

$$L_W = 0.0010\ M_V P_{VA} Q K_N K_P \quad (1\text{-}29)$$

where:

L_T = total loss, lb/yr
L_S = standing storage loss, lb/yr
L_W = working loss, lb/yr

V_V = tank vapor space volume, ft^3

$$V_V = \pi/4\ D^2\ H_{VO} \tag{1-3}$$

W_V = vapor density, lb/ft^3

$$W_V = \frac{M_V\ P_{VA}}{R T_{LA}} \tag{1-21}$$

K_E = vapor space expansion factor, dimensionless

$$K_E = \frac{\Delta T_V}{T_{LA}} + \frac{\Delta P_V - \Delta P_B}{P_A - P_{VA}} \tag{1-7}$$

K_S = vented vapor space saturation factor, dimensionless

$$K_S = \frac{1}{1 + 0.053\ P_{VA}\ H_{VO}} \tag{1-20}$$

D = diameter, ft

H_{VO}= vapor space outage, ft

M_V = molecular weight of vapor, lb/lb-mole

P_{VA} = vapor pressure at the daily average liquid surface temperature, psia

R = ideal gas constant = $\frac{10.731\ \text{psia} \cdot \text{ft}^3}{\text{lb-mole} \cdot {}^\circ\text{R}}$

T_{LA} = daily average liquid surface temperature, °R

ΔT_V = daily vapor temperature range, °R

ΔP_V = daily vapor pressure range, psia

ΔP_B = breather vent pressure setting range, psi

P_A = atmospheric pressure, psia

Q = annual net throughput, bbl/yr

K_N = working loss turnover factor, dimensionless

K_P = working loss product factor, dimensionless

4. Calculate each component of the standing storage loss and working loss functions.

a. Tank vapor space volume, V_V:

$$V_V = \pi/4\ D^2\ H_{VO} \tag{1-3}$$

D = 6 ft (given)

For a cone roof, the vapor space outage, H_{VO} is calculated by:

$$H_{VO} = H_S - H_L + H_{RO} \tag{1-15}$$

H_S = tank shell height, 12 ft (given)

H_L = stock liquid height, 8 ft (given)

$$H_{RO} = \text{roof outage, } 1/3\ H_R = 1/3(S_R)(R_S) \tag{1-16}$$

S_R = tank cone roof slope, 0.0625 ft/ft (given) (see Note 1 to Equation 1-15)

R_S = tank shell radius = 1/2 D = 1/2 (6) = 3

Substituting values in Equation 1-16 yields,

H_{RO} = 1/3 (0.0625)(3) = 0.0625 ft

Then use Equation 1-15 to calculate H_{VO},

H_{VO} = 12 - 8 + 0.0625 = 4.0625 ft

Therefore,

$$V_V = \frac{\pi}{4}\ (6)^2\ (4.0625) = 114.86\ ft^3$$

b. Vapor density, W_V:

$$W_V = \frac{M_V P_{VA}}{R\ T_{LA}} \tag{1-21}$$

$R =$ ideal gas constant $= 10.731 \dfrac{psia \cdot ft^3}{lb - mole \cdot {}^\circ R}$

$M_V =$ stock vapor molecular weight, lb/lb-mole

$P_{VA} =$ stock vapor pressure at the daily average liquid surface temperature, psia

$T_{LA} =$ daily average liquid surface temperature, °R

First, calculate T_{LA} using Equation 1-26.

$$T_{LA} = 0.44\ T_{AA} + 0.56\ T_B + 0.0079\ \alpha\ I \tag{1-26}$$

where:

$T_{AA} =$ daily average ambient temperature, °R

$T_B =$ liquid bulk temperature, °R

$I =$ daily total solar insolation, Btu/ft^2·d = 1,568 (see Table 7.1-7)

$\alpha =$ tank paint solar absorptance = 0.17 (see Table 7.1-6)

T_{AA} and T_B must be calculated from Equations 1-27 and 1-28.

$$T_{AA} = \frac{T_{AX} + T_{AN}}{2} \tag{1-27}$$

from Table 7.1-7, for Denver, Colorado:

$T_{AX} =$ daily maximum ambient temperature = 64.3 °F

$T_{AN} =$ daily minimum ambient temperature = 36.2 °F

Converting to °R:

T_{AX} = 64.3 + 460 = 524.3°R

T_{AN} = 36.2 + 460 = 496.2°R

Therefore,

T_{AA} = (524.3 + 496.2)/2 = 510.25 °R

T_B = liquid bulk temperature = $T_{AA} + 6\alpha - 1$ (1-15)

T_{AA} = 510.25 °R from previous calculation

α = paint solar absorptance = 0.17 (see Table 7.1-6)

I = daily total solar insolation on a horizontal surface = 1,568 Btu/ft^2·d (see Table 7.1-7)

Substituting values in Equation 1-28

$$T_B = 510.25 + 6\ (0.17) - 1 = 510.27\ °R$$

Using Equation 1-26,

T_{LA} = (0.44) (510.25°R) + 0.56 (510.27°R) + 0.0079 (0.17) (1,568) = 512.36°R

Second, calculate P_{VA} using Raoult's Law.

According to Raoult's Law, the partial pressure of a component is the product of its pure vapor pressure and its liquid mole fraction. The sum of the partial pressures is equal to the total vapor pressure of the component mixture stock.

The pure vapor pressures for benzene, toluene, and cyclohexane can be calculated from Antoine's equation. Table 7.1-5 provides the Antoine's coefficients for benzene, which are A = 6.905, B = 1,211.033, and C = 220.79. For toluene, A = 6.954, B = 1,344.8, and C = 219.48. For cyclohexane, A = 6.841, B = 1,201.53, and C = 222.65. Therefore:

$$\log P = A - \frac{B}{T + C}$$

T_{LA}, average liquid surface temperature (°C) = (512.36 - 492)/1.8 = 11

For benzene,

$$\log P = 6.905 - \frac{1{,}211.033}{(11°C + 220.79)}$$

P = 47.90 mmHg = 0.926 psia

Similarly for toluene and cyclohexane,

P = 0.255 psia for toluene

P = 0.966 psia for cyclohexane

In order to calculate the mixture vapor pressure, the partial pressures need to be calculated for each component. The partial pressure is the product of the pure vapor pressures of each component (calculated above) and the mole fractions of each component in the liquid.

The mole fractions of each component are calculated as follows:

Component	Amount, lb	÷ M_i	Moles	x_i
Benzene	2,812	78.1	36.0	0.90
Toluene	258	92.1	2.80	0.07
Cyclohexane	101	84.2	1.20	0.03
Total			40.0	1.00

where:

M_i = molecular weight of component

x_i = liquid mole fraction

The partial pressures of the components can then be calculated by multiplying the pure vapor pressure by the liquid mole fraction as follows:

Component	P at 52°F	x_i	$P_{partial}$
Benzene	0.926	0.90	0.833
Toluene	0.255	0.07	0.018
Cyclohexane	0.966	0.03	0.029
Total		1.0	0.880

The vapor pressure of the mixture is then 0.880 psia.

Third, calculate the molecular weight of the vapor, M_V. Molecular weight of the vapor depends upon the mole fractions of the components in the vapor.

$$M_V = \Sigma M_i y_i$$

where:

M_i = molecular weight of the component

y_i = vapor mole fraction

The vapor mole fractions, y_i, are equal to the partial pressure of the component divided by the total vapor pressure of the mixture.

Therefore,

$$y_{benzene} = P_{partial}/P_{total} = 0.833/0.880 = 0.947$$

Similarly, for toluene and cyclohexane,

$$y_{toluene} = P_{partial}/P_{total} = 0.020$$

$$y_{cyclohexane} = P_{partial}/P_{total} = 0.033$$

The mole fractions of the vapor components sum to 1.0.

The molecular weight of the vapor can be calculated as follows:

Component	M_i	y_i	M_v
Benzene	78.1	0.947	74.0
Toluene	92.1	0.020	1.84
Cyclohexane	84.2	0.033	2.78
Total		1.0	78.6

Since all variables have now been solved, the stock density, W_V, can be calculated:

$$W_V = \frac{M_V P_{VA}}{R\ T_{LA}}$$

$$\frac{(78.6)\ \ (0.880)}{(10.731)\,(512.36)} = 1.26 \times 10^{-2}\ \frac{lb}{ft^3}$$

c. Vapor space expansion factor, K_E:

$$K_E = \frac{\Delta T_V}{T_{LA}} + \frac{\Delta P_V - \Delta P_B}{P_A - P_{VA}} \quad (1\text{-}7)$$

where:

ΔT_V = daily vapor temperature range, °R

ΔP_V = daily vapor pressure range, °R

ΔP_B = breather vent pressure setting range, psia

P_A = atmospheric pressure, 14.7 psia (given)

P_{VA} = vapor pressure at daily average liquid surface temperature, psia = 0.880 psia (from Step 4b)

T_{LA} = daily average liquid surface temperature, °R = 512.36°R (from Step 4b)

First, calculate the daily vapor temperature range from Equation 1-8:

$$\Delta T_V = 0.72\,\Delta T_A + 0.028\alpha I \quad (1\text{-}8)$$

where:

ΔT_V = daily vapor temperature range, °R

ΔT_A = daily ambient temperature range = $T_{AX} - T_{AN}$

α = tank paint solar absorptance, 0.17 (given)

I = daily total solar insolation, 1,568 Btu/ft^2·d (given)

from Table 7.1-7, for Denver, Colorado:

T_{AX} = 64.3°F
T_{AN} = 36.2°F

Converting to °R,

T_{AX} = 64.3 + 460 = 524.3°R

T_{AN} = 36.2 + 460 = 496.2°R

From Equation 1-12 and $\Delta T_A = T_{AX} - T_{AN}$

$\Delta T_A =$ 524.3 - 496.2 = 28.1°R

Therefore,

$\Delta T_V =$ 0.72 (28.1) + (0.028)(0.17)(1568) = 27.7°R

Second, calculate the daily vapor pressure range using Equation 1-9:

$$\Delta P_V = P_{VX} - P_{VN} \quad (1\text{-}9)$$

P_{VX}, P_{VN} = vapor pressures at the daily maximum, minimum liquid temperatures can be calculated in a manner similar to the P_{VA} calculation shown earlier.

T_{LX} = maximum liquid temperature, $T_{LA} + 0.25\ \Delta T_V$ (from Figure 7.1-17)

T_{LN} = minimum liquid temperature, $T_{LA} - 0.25\ \Delta T_V$ (from Figure 7.1-17)

T_{LA} = 512.36 (from Step 4b)

$\Delta T_V =$ 27.7°R

$T_{LX} =$ 512.36 + (0.25) (27.7) = 519.3°R or 59°F

$T_{LN} =$ 512.36 - (0.25) (27.7) = 505.4°R or 45°F

Using Antoine's equation, the pure vapor pressures of each component at the minimum liquid surface temperature are:

$P_{benzene} =$ 0.758 psia
$P_{toluene} =$ 0.203 psia
$P_{cyclohexane} =$ 0.794 psia

The partial pressures for each component at T_{LN} can then be calculated as follows:

Component	P at 45°F	x_i	$P_{partial}$
Benzene	0.758	0.90	0.68
Toluene	0.203	0.07	0.01
Cyclohexane	0.794	0.03	0.02
Total		1.0	0.71

Using Antoine's equation, the pure vapor pressures of each component at the maximum liquid surface temperature are:

$P_{benzene}$ = 1.14 psia
$P_{toluene}$ = 0.32 psia
$P_{cyclohexane}$ = 1.18 psia

The partial pressures for each component at T_{LX} can then be calculated as follows:

Component	P	x_i	$P_{partial}$
Benzene	1.14	0.90	1.03
Toluene	0.32	0.07	0.02
Cyclohexane	1.18	0.03	0.04
Total		1.0	1.09

Therefore, the vapor pressure range, $\Delta P_V = P_{LX} - P_{LN} = 1.09 - 0.710 = 0.38$ psia.

Next, calculate the breather vent pressure, ΔP_B, from Equation 1-11:

$$\Delta P_B = P_{BP} - P_{BV} \tag{1-11}$$

where:

P_{BP} = breather vent pressure setting = 0.03 psia (given) (see Note 3 to Equation 1-7)

P_{BV} = breather vent vacuum setting = -0.03 psig (given) (see Note 3 to Equation 1-7)

ΔP_B = 0.03 - (-0.03) = 0.06 psig

Finally, K_E, can be calculated by substituting values into Equation 1-7.

$$K_E = \frac{(27.7)}{(512.36)} + \frac{0.38 - 0.06 \text{ psia}}{14.7 \text{ psia} - 0.880 \text{ psia}} = 0.077$$

d. Vented vapor space saturation factor, K_S:

$$K_S = \frac{1}{1 + 0.053 \; P_{VA} \; H_{VO}} \qquad (1\text{-}20)$$

where:

P_{VA} = 0.880 psia (from Step 4b)

$$K_S = \frac{1}{1 + 0.053(0.880)(4.0625)} = 0.841$$

H_{VO} = 4.0625 ft (from Step 4a)

5. <u>Calculate standing storage losses.</u>

$$L_S = 365 \; W_V V_V K_E K_S$$

Using the values calculated above:

W_V = $1.26 \times 10^{-2} \; \frac{lb}{ft^3}$ (from step 4b)

V_V = 114.86 ft^3 (from Step 4a)

K_E = 0.077 (from Step 4c)

K_S = 0.841 (from Step 4d)

L_S = $365 \; (1.26 \times 10^{-2})(114.86)(0.077)(0.841) = 34.2$ lb/yr

6. Calculate working losses.

The amount of VOCs emitted as a result of filling operations can be calculated from the following equation:

$$L_W = (0.0010)\ (M_V)(P_{VA})(Q)(K_N)(K_P) \qquad (1\text{-}29)$$

From Step 4:

M_V = 78.6 (from Step 4b)

P_{VA} = 0.880 psia (from Step 4b)

Q = 8,450 gal/yr x 2.381 bbl/100 gal = 201 bbl/yr (given)

K_P = product factor, dimensionless = 1 for volatile organic liquids, 0.75 for crude oils

K_N = 1 for turnovers $\leq$36 (given)

N = turnovers per year = 5 (given)

L_W = (0.0010)(78.6)(0.880)(201)(1)(1) = 13.9 lb/yr

7. Calculate total losses, L_T.

$$L_T = L_S + L_W$$

where:

L_S = 34.2 lb/yr

L_W = 13.9 lb/yr

L_T = 34.7 + 13.9 = 48.1 lb/yr

8. Calculate the amount of each component emitted from the tank.

The amount of each component emitted is equal to the weight fraction of the component in the vapor times the amount of total VOC emitted. Assuming 100 moles of vapor are present, the number of moles of each component will be equal to the mole fraction multiplied by 100. This assumption is valid regardless of the actual number of moles present. The vapor mole fractions were determined in Step 4b. The weight of a component present in a mixture is equal to the product of the number of moles and molecular weight, M_i, of the component. The weight fraction of each component is calculated as follows:

$$Weight\ \ fraction = \frac{pounds_i}{total\ \ pounds}$$

Therefore,

Component	No. of moles x	M_i =	$Pounds_i$	Weight fraction
Benzene	(0.947 x 100) = 94.7	78.1	7,396	0.94
Toluene	(0.02 x 100) = 2.0	92.1	184	0.02
Cyclohexane	(0.033 x 100) = 3.3	84.3	278	0.04
Total	100		7,858	1.0

The amount of each component emitted is then calculated as:

$$\text{Emissions of component}_i = (\text{weight fraction}_i)(L_T)$$

Component	Weight fraction x	Total VOC emitted, lb/yr =	Emissions, lb/yr
Benzene	0.94	48.1	45.2
Toluene	0.02	48.1	0.96
Cyclohexane	0.04	48.1	1.92
Total			48.1

Example 2 - Chemical Mixture in a Horizontal Tank - Assuming that the tank mentioned in Example 1 is now horizontal, calculate emissions. (Tank diameter is 6 ft and length is 12 ft.)

Solution:

Emissions from horizontal tanks can be calculated by adjusting parameters in the fixed roof equations. Specifically, an effective diameter, D_E, is used in place of the tank diameter, D. The vapor space height, H_{VO}, is assumed to be half the actual tank diameter.

1. Horizontal tank adjustments. Make adjustments to horizontal tank values so that fixed roof tank equations can be used. The effective diameter, D_E, is calculated as follows:

$$D_E = \sqrt{\frac{DL}{0.785}}$$

$$D_E = \sqrt{\frac{(6)\ (12)}{0.785}} = 9.577 \text{ ft}$$

The vapor space height, H_{VO} is calculated as follows:

$$H_{VO} = 1/2\ D = 1/2\ (6) = 3 \text{ ft}$$

2. Given the above adjustments the standing storage loss, L_S, can be calculated.

Calculate values for each effected variable in the standing loss equation.

$$L_S = 365\ V_V W_V K_E K_S$$

V_V and K_S depend on the effective tank diameter, D_E, and vapor space height, H_{VO}.

These variables can be calculated using the values derived in Step 1:

$$V_V = \frac{\pi}{4} (D_E)^2 \; H_{VO}$$

$$V_V = \frac{\pi}{4} (9.577)^2 \quad (3) = 216.10 \text{ ft}^3$$

$$K_S = \frac{1}{1 + (0.053) \; (P_{VA}) \; (H_{VO})}$$

$$K_S = \frac{1}{1 + (0.053) \; (0.880) \; (3)} = 0.877$$

3. Calculate standing storage loss using the values calculated in Step 2.

$L_S = 365 \; V_V W_V K_E K_S$

$V_V = 216.10 \text{ ft}^3$ (from Step 2)

$W_V = 1.26 \times 10^{-2} \text{ lb/ft}^3$ (from Step 4b, example 1)

$K_E = 0.077$ (from Step 4c, example 1)

$K_S = 0.877$ (from Step 2)

$L_S = (365)(1.26 \times 10^{-2})(216.10)(0.077)(0.877)$

$L_S = 67.1$ lb/yr

4. Calculate working loss. Since the parameters for working loss do not depend on diameter or vapor space height, the working loss for a horizontal tank of the same capacity as the tank in Example 1 will be the same.

$L_W = 13.9$ lb/yr

5. Calculate total emissions.

$L_T = L_S + L_W$

$L_T = 67.1 + 13.9 = 81$ lb/yr

Example 3 - Chemical Mixture in an External Floating Roof Tank - Determine the yearly emission rate of a mixture that is 75 percent benzene, 15 percent toluene, and 10 percent cyclohexane, by weight, from a 100,000-gallon external floating roof tank with a pontoon roof. The tank is 20 feet in diameter. The tank has 10 turnovers per year. The tank has a mechanical shoe seal (primary seal) and a shoe-mounted

secondary seal. The tank is made of welded steel and has a light rust covering the inside surface of the shell. The tank shell is painted white, and the tank is located in Newark, New Jersey. The floating deck is equipped with the following fittings: (1) an ungasketed access hatch with an unbolted cover, (2) an unspecified number of ungasketed vacuum breakers with weighted mechanical actuation, and (3) ungasketed gauge hatch/sample ports with weighted mechanical actuation.

Solution:

1. Determine tank type. The tank is an external floating roof storage tank.

2. Determine estimating methodology. The product consists of three organic liquids, all of which are miscible in each other, which make a homogenous mixture if the material is well mixed. The tank emission rate will be based upon the properties of the mixture. Because the components have similar structures and molecular weights, Raoult's Law is assumed to apply to the mixture.

3. Select equations to be used. For an external floating roof tank,

$$L_T = L_{WD} + L_R + L_F + L_D \quad (2\text{-}1)$$

$$L_{WD} = (0.943)\ QC_S W_L/D \quad (2\text{-}4)$$

$$L_R = (K_{Ra} + K_{Rb}v^n)P^* D M_V K_C \quad (2\text{-}2)$$

$$L_F = F_F P^* M_V K_C \quad (2\text{-}5)$$

$$L_D = K_D S_D D^2 P^* M_V K_C \quad (2\text{-}9)$$

where:

L_T = total loss, lb/yr

L_{WD} = withdrawal loss, lb/yr

L_R = rim seal loss from external floating roof tanks, lb/yr

L_F = deck fitting loss, lb/yr

L_D = deck seam loss, lb/yr = 0 for external floating roof tanks

Q = product average throughput, bbl/yr

C_S = product withdrawal shell clingage factor, bbl/1,000 ft^2; see Table 7.1-10

W_L = density of liquid, lb/gal

D = tank diameter, ft

K_{Ra} = zero wind speed rim seal loss factor, lb-mole/ft·yr; see Table 7.1.8

K_{Rb} = wind speed dependent rim seal loss factor, lb-mole/(mph)^{n}ft·yr; see Table 7.1-8

v = average ambient wind speed for the tank site, mph

n = seal wind speed exponent, dimensionless

P^* = the vapor pressure function, dimensionless

$$P^* = \frac{\frac{P_{VA}}{P_A}}{\left[1+\left(1-\frac{P_{VA}}{P_A}\right)^{0.5}\right]^2}$$

where:

P_{VA}= the true vapor pressure of the materials stored, psia

P_A = atmospheric pressure, psia = 14.7

M_V = molecular weight of product vapor, lb/lb-mole

K_C = product factor, dimensionless

F_F = the total deck fitting loss factor, lb-mole/yr

$$= \sum_{i=1}^{nf}\left(N_{Fi}\ K_{Fi}\right) \quad = \left[\left(N_{F1}\ K_{F1}\right)+\left(N_{F2}\ K_{F2}\right)+\ldots+\left(N_{Fnf}\ K_{Fnf}\right)\right]$$

where:

N_{F_i} = number of fittings of a particular type, dimensionless. N_{F_i} is determined for the specific tank or estimated from Tables 7.1-12, 7.1-13, or 7.1-14

K_{F_i} = deck fitting loss factor for a particular type of fitting, lb-mole/yr. K_{F_i} is determined for each fitting type from Equation 2-7 and the loss factors in Table 7.1-12

n_f = number of different types of fittings, dimensionless; n_f = 3 (given)
K_D = deck seam loss per unit seam length factor, lb-mole/ft/yr
S_D = deck seam length factor, ft/ft^2

4. Identify parameters to be calculated/determined from tables. In this example, the following parameters are not specified: W_L, F_F, C, K_{Ra}, K_{Rb}, v, n, P_{VA}, P^*, M_V, and K_C. The following values are obtained from tables or assumptions:

K_C = 1.0 for volatile organic liquids (given in Section 7.1.3.2)

C = 0.0015 bbl/1,000 ft^2 for tanks with light rust (from Table 7.1-10)

K_{Ra} = 1.6 (from Table 7.1-8)

K_{Rb} = 0.3 (from Table 7.1-8)

n = 1.6 (from Table 7.1-8)

Since the wind speed for the actual tank site is not specified, the wind speed for Newark, New Jersey is used:

v = 10.2 mph (see Table 7.1-9)

F_F, W_L, P_{VA}, P^*, and M_V still need to be calculated.

F_F is estimated by calculating the individual K_{F_i} and N_{F_i} for each of the three types of deck fittings used in this example. For the ungasketed access hatches with unbolted covers, the K_F value can be calculated using information from Table 7.1-12. For this fitting, K_{Fa} = 36, K_{Fb} = 5.9, and m = 1.2. The value for K_V for external floating roof tanks is 0.7 (see Section 7.1.3, Equation 2-7). There is normally one access hatch. So,

$$K_{Faccess\ hatch} = K_{Fa} + K_{Fb}(K_v v)^m$$

$$= 36 + 5.9\ [(0.7)(10.2)]^{1.2}$$

$$K_{Faccess\ hatch} = 98.4 \text{ lb-mole/yr}$$

$$N_{Faccess\ hatch} = 1$$

The number of vacuum breakers can be taken from Table 7.1-13. For a tank with a diameter of 20 feet and a pontoon roof, the typical number of vacuum breakers is one. Table 7.1-12 provides fitting factors for weighted mechanical actuation, ungasketed vacuum breakers when the average wind speed is 10.2 mph.

Based on this table, $K_{Fa} = 7.8$, $K_{Fb} = 0.01$, and m = 4. So,

$$K_{Fvacuum\ breaker} = K_{Fa} + K_{Fb}\,(K_v v)^m$$

$$K_{Fvacuum\ breaker} = 7.8 + 0.01\,[(0.7)(10.2)]^4$$

$$K_{Fvacuum\ breaker} = 33.8 \text{ lb-mole/yr}$$

$$N_{Fvacuum\ breaker} = 1$$

For the ungasketed gauge hatch/sample ports with weighted mechanical actuation, Table 7.1-12 indicates that floating roof tanks normally have only one. This table also indicates that $K_{Fa} = 2.3$, $K_{Fb} = 0$, and m = 0. Therefore,

$$K_{Fgauge\ hatch/sample\ port} = K_{Fa} + K_{Fb}\,(K_v v)^m$$

$$K_{Fgauge\ hatch/sample\ port} = 2.3 + 0$$

$$K_{Fgauge\ hatch/sample\ port} = 2.3 \text{ lb-mole/yr}$$

$$N_{Fgauge\ hatch/sample\ port} = 1$$

F_F can be calculated from Equation 2-6:

$$F_F = \sum_{i=1}^{3} (K_{Fi})\,(N_{Fi})$$

$$=(98.4)(1)+(33.8)(1)+(2.3)(1)$$

$$=134.5 \text{ lb-mole/yr}$$

5. <u>Calculate mole fractions in the liquid.</u> The mole fractions of components in the liquid must be calculated in order to estimate the vapor pressure of the liquid using Raoult's Law. For this example, the weight fractions (given as 75 percent benzene, 15 percent toluene, and 10 percent cyclohexane) of the mixture must be converted to mole fractions. First, assume that there are 1,000 lb of liquid mixture. Using this assumption, the mole fractions calculated will be valid no matter how many pounds of liquid actually are present. The corresponding amount (pounds) of each component is equal to the product of the weight fraction and the assumed total pounds of mixture of 1,000. The number of moles of each component is calculated by dividing the weight of each component by the molecular weight of the component. The mole fraction of each component is equal to the number of moles of each component divided by the total number of moles. For this example the following values are calculated:

Component	Weight fraction	Weight, lb	Molecular weight, M_i, lb/lb-mole	Moles	Mole fraction
Benzene	0.75	750	78.1	9.603	0.773
Toluene	0.15	150	92.1	1.629	0.131
Cyclohexane	0.10	100	84.2	1.188	0.096
Total	1.00	1,000		12.420	1.000

For example, the mole fraction of benzene in the liquid is 9.603/12.420 = 0.773.

6. Determine the daily average liquid surface temperature. The daily average liquid surface temperature is equal to:

$$T_{LA} = 0.44\ T_{AA} + 0.56\ T_B + 0.0079\ \alpha\ I$$

$$T_{AA} = (T_{AX} + T_{AN})/2$$

$$T_B = T_{AA} + 6\alpha - 1$$

For Newark, New Jersey (see Table 7.1-7):

$$T_{AX} = 62.5°F = 522.2°R$$

$$T_{AN} = 45.9°F = 505.6°R$$

$$I = 1{,}165\ Btu/ft^2 \cdot d$$

From Table 7.1-6, $\alpha = 0.17$

Therefore;

$$T_{AA} = (522.2 + 505.6)/2 = 513.9°R$$

$$T_B = 513.9°R + 6\ (0.17) - 1 = 513.92°R$$

$$T_{LA} = 0.44\ (513.9) + 0.56\ (513.92) + 0.0079\ (0.17)(1{,}165)$$

$$= 515.5°R = 55.8°F = 56°F$$

7. Calculate partial pressures and total vapor pressure of the liquid. The vapor pressure of each component at 56°F can be determined using Antoine's equation. Since Raoult's Law is assumed to apply in this example, the partial pressure of each component is the liquid mole fraction (x_i) times the vapor pressure of the component (P).

Component	P at 56°F	x_i	$P_{partial}$
Benzene	1.04	0.773	0.80
Toluene	0.29	0.131	0.038
Cyclohexane	1.08	0.096	0.104
Totals		1.00	0.942

The total vapor pressure of the mixture is estimated to be 0.942 psia.

8. Calculate mole fractions in the vapor. The mole fractions of the components in the vapor phase are based upon the partial pressure that each component exerts (calculated in Step 7).

So for benzene:

$$y_{benzene} = P_{partial}/P_{total} = 0.80/0.942 = 0.85$$

where:

$y_{benzene}$ = mole fraction of benzene in the vapor

$P_{partial}$ = partial pressure of benzene in the vapor, psia

P_{total} = total vapor pressure of the mixture, psia

Similarly,

$$y_{toluene} = 0.038/0.942 = 0.040$$

$$y_{cyclohexane} = 0.104/0.942 = 0.110$$

The vapor phase mole fractions sum to 1.0.

9. Calculate molecular weight of the vapor. The molecular weight of the vapor depends upon the mole fractions of the components in the vapor.

$$M_V = \sum M_i y_i$$

where:

M_V = molecular weight of the vapor, lb/lb-mole

M_i = molecular weight of component i, lb/lb-mole

y_i = mole fraction of component i in the vapor, lb-mole/lb-mole

Component	M_i	y_i	$M_V = \sum(M_i)(y_i)$
Benzene	78.1	0.85	66.39
Toluene	92.1	0.040	3.68
Cyclohexane	84.2	0.110	9.26
Total		1.00	79.3

The molecular weight of the vapor is 79.3 lb/lb-mole.

10. Calculate weight fractions of the vapor. The weight fractions of the vapor are needed to calculate the amount (in pounds) of each component emitted from the tank. The weight fractions are related to the mole fractions calculated in Step 7 and total molecular weight calculated in Step 9:

$$Z_{V_i} = \frac{y_i M_i}{M_V}$$

$$Z_{V_i} = \frac{(0.85)(78.1)}{79.3} = 0.84 \text{ for benzene}$$

$$Z_{V_i} = \frac{(0.040)(92.1)}{79.3} = 0.04 \text{ for toluene}$$

$$Z_{V_i} = \frac{(0.110)(84.2)}{79.3} = 0.12 \text{ for cyclohexane}$$

11. Calculate total VOC emitted from the tank. The total VOC emitted from the tank is calculated using the equations identified in Step 3 and the parameters calculated in Steps 4 through 9.

$$L_T = L_{WD} + L_R + L_F$$

a. Calculate withdrawal losses:

$$L_{WD} = 0.943\ QCW_L/D$$

where:

$Q =$ 100,000 gal x 10 turnovers/yr (given)

$=$ 1,000,000 gal x 2.381 bbl/100 gal = 23,810 bbl/yr

$C =$ 0.0015 bbl/10^3 ft^2 (from Table 7.1-10)

$W_L =$ 1/[$\sum$ (wt fraction in liquid)/(liquid component density from Table 7.1-3)]

Weight fractions

Benzene = 0.75 (given)
Toluene = 0.15 (given)
Cyclohexane = 0.10 (given)

Liquid densities

Benzene = 7.4 (see Table 7.1-3)
Toluene = 7.3 (see Table 7.1-3)
Cyclohexane = 6.5 (see Table 7.1-3)

$$W_L = 1/[(0.75/7.4) + (0.15/7.3) + (0.10/6.5)]$$

$$= 1/(0.101 + 0.0205 + 0.0154)$$

$$= 1/0.1369$$

$$= 7.3 \text{ lb/gal}$$

$$D = 20 \text{ ft (given)}$$

$$L_{WD} = 0.943\ QCW_L/D$$

$$= [0.943(23{,}810)(0.0015)(7.3)/20]$$

$$= 12 \text{ lb of VOC/yr from withdrawal losses}$$

b. Calculate rim seal losses:

$$L_R = (K_{Ra} + K_{Rb}v^n)DP^*M_VK_C$$

where:

$$K_{Ra} = 1.6 \text{ (from Step 4)}$$

$$K_{Rb} = 0.3 \text{ (from Step 4)}$$

$$v = 10.2 \text{ mph (from Step 4)}$$

$$n = 1.6 \text{ (from Step 4)}$$

$$K_C = 1 \text{ (from Step 4)}$$

$$P_{VA} = 0.942 \text{ psia (from Step 7) (formula from Step 3)}$$

$$D = 20 \text{ ft}$$

$$P^* = \frac{\frac{P_{VA}}{P_A}}{\left[1+\left(1-\frac{P_{VA}}{P_A}\right)^{0.5}\right]^2}$$

$= (0.942/14.7)/(1+[1-(0.942/14.7)]^{0.5})^2 = 0.017$

$M_V =$ 79.3 lb/lb-mole (from Step 9)

$L_R = [(1.6 + (0.3)(10.2)^{1.6})](0.017)(20)(79.3)(1.0)$

= 376 lb of VOC/yr from rim seal losses

c. Calculate deck fitting losses:

$L_F = F_F P^* M_V K_C$

where:

$F_F =$ 134.5 lb-mole/yr (from Step 4)

$P^* = 0.017$

$M_V =$ 79.3 lb/lb-mole

$K_C =$ 1.0 (from Step 4)

$L_F = (134.5)(0.017)(79.3)(1.0)$

= 181 lb/yr of VOC emitted from deck fitting losses

d. Calculate total losses:

$L_T = L_{WD} + L_R + L_F$

= 12 + 376 + 181

= 569 lb/yr of VOC emitted from tank

12. Calculate amount of each component emitted from the tank. For an external floating roof tank, the individual component losses are determined by Equation 4-2:

$$L_{T_i} = (Z_{V_i})(L_R + L_F) + (Z_{L_i})(L_{WD})$$

Therefore,

$L_{Tbenzene}$ = (0.84)(557) + (0.75)(12) = 477 lb/yr benzene
$L_{Ttoluene}$ = (0.040)(557) + (0.15)(12) = 24 lb/yr toluene
$L_{Tcyclohexane}$ = (0.12)(557) + (0.10)(12) = 68 lb/yr cyclohexane

Example 4 - Gasoline in an Internal Floating Roof Tank - Determine emissions of product from a 1 million gallon, internal floating roof tank containing gasoline (RVP 13). The tank is painted white and is located in Tulsa, Oklahoma. The annual number of turnovers for the tank is 50. The tank is 70 ft in diameter and 35 ft high and is equipped with a liquid-mounted primary seal plus a secondary seal. The tank has a column-supported fixed roof. The tank's deck is welded and equipped with the following: (1) two access hatches with unbolted, ungasketed covers; (2) an automatic gauge float well with an unbolted, ungasketed cover; (3) a pipe column well with a flexible fabric sleeve seal; (4) a sliding cover, gasketed ladder well; (5) adjustable deck legs; (6) a slotted sample pipe well with a gasketed sliding cover; and (7) a weighted, gasketed vacuum breaker.

Solution:

1. Determine tank type. The following information must be known about the tank in order to use the floating roof equations:

-- the number of columns
-- the effective column diameter
-- the rim seal description (vapor- or liquid-mounted, primary or secondary seal)
-- the deck fitting types and the deck seam length

Some of this information depends on specific construction details, which may not be known. In these instances, approximate values are provided for use.

2. Determine estimating methodology. Gasoline consists of many organic compounds, all of which are miscible in each other, which form a homogenous mixture. The tank emission rate will be based on the properties of RVP 13 gasoline. Since vapor pressure data have already been compiled, Raoult's Law will not be used. The molecular weight of gasoline also will be taken from a table and will not be calculated. Weight fractions of components will be assumed to be available from SPECIATE data base.

3. Select equations to be used.

$$L_T = L_{WD} + L_R + L_F + L_D \tag{2-1}$$

$$L_{WD} = \left(\frac{(0.943)QC_SW_L}{D}\right)\left[1+\left(\frac{N_CF_c}{D}\right)\right] \tag{2-4}$$

$$L_R = (K_{Ra} + K_{Rb}v^n)DP^*M_VK_C \tag{2-2}$$

$$L_F = F_FP^*M_VK_C \tag{2-5}$$

$$L_D = K_DS_DD^2P^*M_VK_C \tag{2-9}$$

where:

L_T = total loss, lb/yr
L_{WD} = withdrawal loss, lb/yr
L_R = rim seal loss, lb/yr
L_F = deck fitting loss, lb/yr
L_D = deck seam loss, lb/yr
Q = product average throughput (tank capacity [bbl] times turnovers per year), bbl/yr
C_S = product withdrawal shell clingage factor, bbl/1,000 ft^2
W_L = density of liquid, lb/gal
D = tank diameter, ft
N_C = number of columns, dimensionless
F_C = effective column diameter, ft
K_{Ra} = zero wind speed rim seal loss factor, lb-mole/ft·yr
K_{Rb} = wind speed dependent rim seal loss factor, lb-mole/$(mph)^n$ft·yr
v = average ambient site wind speed (zero for internal floating roof tanks), mph
M_V = the average molecular weight of the product vapor, lb/lb-mole
K_C = the product factor, dimensionless
P^* = the vapor pressure function, dimensionless

$$P^* = \frac{\dfrac{P_{VA}}{P_A}}{\left[1+\left(1-\dfrac{P_{VA}}{P_A}\right)^{0.5}\right]^2}$$

P_{VA} = the vapor pressure of the material stored, psia
P_A = average atmospheric pressure at tank location, psia
F_F = the total deck fitting loss factor, lb-mole/yr

$$= \sum_{i=1}^{n_f} (K_{Fi})(N_{Fi}) = [(N_{F_1}K_{F_1}) + (N_{F_2}K_{F_2}) + ... + (N_{F_{n_f}}K_{F_{n_f}})]$$

and:

N_{F_i} = number of fittings of a particular type, dimensionless. N_{F_i} is determined for the specific tank or estimated from Table 7.1-12

K_{F_i} = deck fitting loss factor for a particular type of deck fitting, lb-mole/yr. K_{F_i} is determined for each fitting type using Table 7.1-12

n_f = number of different types of fittings, dimensionless

K_D = the deck seam loss factor, lb-mole/ft·yr

= 0.14 for nonwelded decks

= 0 for welded decks

S_D = deck seam length factor, ft/ft^2

= L_{seam}/A_{deck}

where:

L_{seam} = total length of deck seams, ft

A_{deck} = area of deck, ft^2 = $\pi D^2/4$

4. Identify parameters to be calculated or determined from tables. In this example, the following parameters are not specified: N_C, F_C, P, M_V, K_{Ra}, K_{Rb}, v, P^*, K_C, F_F, K_D, and S_D. The density of the liquid (W_L) and the vapor pressure of the liquid (P) can be read from tables and do not need to be calculated. Also, the weight fractions of components in the vapor can be obtained from speciation manuals. Therefore, several steps required in preceding examples will not be required in this example. In each case, if a step is not required, the reason is presented.

The following parameters can be obtained from tables or assumptions:

K_C = 1.0 for volatile organic liquids

N_C = 1 (from Table 7.1-11)

F_C = 1.0 (assumed)

K_{Ra} = 0.3 (from Table 7.1-8)

K_{Rb} = 0.6 (from Table 7.1-8)

v = 0 for internal floating roof tanks

M_V = 62 lb/lb-mole (from Table 7.1-2)

W_L = 5.6 lb/gal (from Table 7.1-2)

C = 0.0015 bbl/1,000 ft^2 (from Table 7.1-10)

K_D = 0 for welded decks so S_D is not needed

$F_F = \sum (K_{F_i} N_{F_i})$

5. Calculate mole fractions in the liquid. This step is not required because liquid mole fractions are only used to calculate liquid vapor pressure, which is given in this example.

6. Calculate the daily average liquid surface temperature. The daily average liquid surface temperature is equal to:

$$T_{LA} = 0.44\ T_{AA} + 0.56\ T_B + 0.0079\ \alpha\ I$$

$$T_{AA} = (T_{AX} + T_{AN})/2$$

$$T_B = T_{AA} + 6\alpha - 1$$

For Tulsa, Oklahoma (see Table 7.1-7):

T_{AX} = 71.3°F = 530.97°R

T_{AN} = 49.2°F = 508.87°R

I = 1,373 Btu/ft^2·d

From Table 7.1-6, $\alpha = 0.17$

Therefore,

$T_{AA} = (530.97 + 508.87)/2 = 519.92°R$

$T_B = 519.92 + 6(0.17) - 1 = 519.94°R$

$T_{LA} = 0.44\ (519.92) + 0.56\ (519.94) + 0.0079(0.17)(1{,}373)$

$T_{LA} = 228.76 + 291.17 + 1.84$

$T_{LA} = 521.77°R$ or $62°F$

7. Calculate partial pressures and total vapor pressure of the liquid. The vapor pressure of gasoline RVP 13 can be interpolated from Table 7.1-2. The interpolated vapor pressure at 62°F is equal to 7.18 psia. Therefore,

$$P^* = \frac{\dfrac{P_{VA}}{P_A}}{\left[1 + \left(1 - \dfrac{P_{VA}}{P_A}\right)^{0.5}\right]^2}$$

$P^* = (7.18/14.7)/[1 + (1-(7.18/14.7))^{0.5}]^2$

$P^* = 0.166$

8. Calculate mole fractions of components in the vapor. This step is not required because vapor mole fractions are needed to calculate the weight fractions and the molecular weight of the vapor, which are already specified.

9. Calculate molecular weight of the vapor. This step is not required because the molecular weight of gasoline vapor is already specified.

10. Calculate weight fractions of components of the vapor. The weight fractions of components in gasoline vapor can be obtained from a VOC speciation manual.

11. Calculate total VOC emitted from the tank. The total VOC emitted from the tank is calculated using the equations identified in Step 3 and the parameters specified in Step 4.

$$L_T = L_{WD} + L_R + L_F + L_D$$

a. Calculate withdrawal losses:

$$L_{WD} = [(0.943)QCW_L]/D\ [1 + (N_C F_C)/D]$$

where:

$Q =$ (1,000,000 gal)(50 turnovers/yr)

$=$ (50,000,000 gal)(2.381 bbl/100 gal) = 1,190,500 bbl/yr

$C =$ 0.0015 bbl/1,000 ft^2

$W_L =$ 5.6 lb/gal

$D =$ 70 ft

$N_C =$ 1

$F_C =$ 1

$L_{WD} =$ [(0.943)(1,190,500)(0.0015)(5.6)]/70[1 + (1)(1)/70] = 137 lb/yr VOC for withdrawal losses

b. Calculate rim seal losses:

$$L_R = (K_{Ra} + K_{Rb}v^n)DP^*M_VK_C$$

Since v = 0 for IFRT's:

$$L_R = K_{Ra}DP^*M_VK_C$$

where:

$K_{Ra} =$ 0.3 lb-mole/ft·yr

$D =$ 70 ft

$P^* =$ 0.166

$M_V =$ 62 lb/lb-mole

$K_C =$ 1.0

$L_R =$ (0.3)(0.166)(70)(62)(1.0) = 216 lb/yr VOC from rim seals

c. Calculate deck fitting losses:

$$L_F = F_F P^* M_V K_C$$

where:

$$F_F = \sum (K_{F_i} N_{F_i})$$

$K_{F_i} = K_{Fa_i}$ for internal floating roof tanks since the wind speed is zero (see Equation 2-8).

Substituting values for K_{Fa_i} taken from Tables 7.1-12 and 7.1-15 for access hatches, gauge float well, pipe column well, ladder well, deck legs, sample pipe well, and vacuum breaker, respectively, yields:

$$F_F = (36)(2) + (14)(1) + (10)(1) + (56)(1) + 7.9[5 + (70/10) + (70^2/600)] + (43.1)(1) + (6.2)(1)$$

$$= 361 \text{ lb-mole/yr}$$

$$P^* = 0.166$$

$$M_V = 62 \text{ lb/lb-mole}$$

$$K_C = 1$$

$$L_F = (361)(0.166)(62)(1.0) = 3{,}715 \text{ lb/yr VOC from deck fittings}$$

d. Calculate deck seam losses:

$$L_D = K_D S_D D^2 P^* M_V K_C$$

Since $K_D = 0$ for IFRT's with welded decks,

$$L_D = 0 \text{ lb/yr VOC from deck seams}$$

e. Calculate total losses:

$$L_T = L_{WD} + L_R + L_F + L_D$$

$$= 137 + 216 + 3{,}715 + 0 = 4{,}068 \text{ lb/yr of VOC emitted from the tank}$$

12. Calculate amount of each component emitted from the tank. The individual component losses are equal to:

$$L_{T_i} = (Z_{V_i})(L_R + L_F + L_D) + (Z_{L_i})(L_{WD})$$

Since the liquid weight fractions are unknown, the individual component losses are calculated based on the vapor weight fraction and the total losses. This procedure should yield approximately the same values as the above equation because withdrawal losses are typically low for floating roof tanks. The amount of each component emitted is the weight fraction of that component in the vapor (obtained from a VOC species data manual and shown below) times the total amount of VOC emitted from the tank. The table below shows the amount emitted for each component in this example.

Constituent	Weight Percent In Vapor	Emissions, lb/yr
Air toxics		
Benzene	0.77	31.3
Toluene	0.66	26.8
Ethylbenzene	0.04	1.6
O-xylene	0.05	2.0
Nontoxics		
Isomers of pentane	26.78	1,089
N-butane	22.95	934
Iso-butane	9.83	400
N-pentane	8.56	348
Isomers of hexane	4.78	194
3-methyl pentane	2.34	95.2
Hexane	1.84	74.9
Others	21.40	871
Total	100	4,068

Source: SPECIATE Data Base Management System, Emission Factor and Inventory Group, U. S. Environmental Protection Agency, Research Triangle Park, NC, 1993.

REFERENCES FOR SECTION 7.1

1. Laverman, R.J., *Emission Reduction Options For Floating Roof Tanks*, Chicago Bridge and Iron Technical Services Company, Presented at the Second International Symposium on Aboveground Storage Tanks, Houston, TX, January 1992.

2. *VOC Emissions From Volatile Organic Liquid Storage Tanks-Background Information For Proposed Standards*, EPA-450/3-81-003a, U. S. Environmental Protection Agency, Research Triangle Park, NC, July 1984.

3. *Evaporative Loss From External Floating Roof Tanks*, Third Edition, Bulletin No. 2517, American Petroleum Institute, Washington, DC, 1989.

4. *Evaporation Loss From Internal Floating Roof Tanks*, Third Edition, Bulletin No. 2519, American Petroleum Institute, Washington, DC, 1982.

5. *Manual Of Petroleum Measurement Standards: Chapter 19: Evaporative Loss Measurement, Section 2, Evaporative Loss From Floating Roof Tanks*, Preliminary Draft, American Petroleum Institute, Washington, DC, December 1994.

6. Ferry, R.L., *Estimating Storage Tank Emissions--Changes Are Coming*, TGB Partnership, 1994.

7. *Benzene Emissions From Benzene Storage Tanks-Background Information For Proposed Standards*, EPA-450/3-80-034a, U. S. Environmental Protection Agency, Research Triangle Park, NC, December 1980.

8. *Evaporative Loss From Fixed Roof Tanks*, Second Edition, Bulletin No. 2518, American Petroleum Institute, Washington, D.C., October 1991.

9. *Estimating Air Toxics Emissions From Organic Liquid Storage Tanks,* EPA-450/4-88-004, U. S. Environmental Protection Agency, Research Triangle Park, NC, October 1988.

10. Barnett, H.C., *et al.*, *Properties Of Aircraft Fuels*, NACA-TN 3276, Lewis Flight Propulsion Laboratory, Cleveland, OH, August 1956.

11. *Petrochemical Evaporation Loss From Storage Tanks*, First Edition, Bulletin No. 2523, American Petroleum Institute, Washington, D.C., 1969.

12. *SIMS Data Base Management System*, Version 2.0, U. S. Environmental Protection Agency, Research Triangle Park, NC, 1990.

13. *Comparative Climatic Data Through 1990*, National Oceanic and Atmospheric Administration, Asheville, NC, 1990.

14. *Input For Solar Systems*, U. S. Department of Commerce, National Oceanic and Atmospheric Administration, Environmental and Information Service, National Climatic Center, Asheville, NC, prepared for the U. S. Department of Energy, Division of Solar Technology, November 1978 (revised August 1979).

15. Ferry, R.L., *Documentation Of Rim Seal Loss Factors For The Manual Of Petroleum Measurement Standards: Chapter 19--Evaporative Loss Measurement: Section 2--Evaporative Loss From Floating Roof Tanks*, preliminary draft, American Petroleum Institute, April 5, 1995.

16. Written communication from R. Jones, et al., Midwest Research Institute, to D. Beauregard, U. S. Environmental Protection Agency, Final Fitting Loss Factors For Internal And External Floating Roof Tanks, May 24, 1995.

17. Written communication from A. Parker and R. Neulicht, Midwest Research Institute, to D. Beauregard, U. S. Environmental Protection Agency, Fitting Wind Speed Correction Factor For External Floating Roof Tanks, September 22, 1995.

18. *Use Of Variable Vapor Space Systems To Reduce Evaporation Loss*, Bulletin No. 2520, American Petroleum Institute, New York, NY, 1964.

19. Written communication from A. Parker, Midwest Research Institute, to D. Beauregard, U. S. Environmental Protection Agency, Final Deck Fitting Loss Factors for AP-42 Section 7.1, February 23, 1996.

20. Courtesy of R. Ferry, TGB Partnership, Hillsborough, NC.

21. *Evaporative Loss from Storage Tank Floating Roof Landings*, Technical Report 2567, American Petroleum Institute, Washington, D.C., April 2005.