ATTACHMENT 1

TO

Letter from C. R. Steinhardt (WPSC)

to

Document Control Desk (NRC)

Dated

May 17, 1994

PROPOSED TS AMENDMENT NO. 129

Description of Changes, Safety Evaluation,

Significant Hazards Determination,

and Environmental Considerations

9405250027 940517
PDR ADOCK 05000305
P PDR

Backgronnd

This Proposed Amendment (PA) is being submitted to clarify Limiting Conditions for Operation (LCO) for the Spray Additive System.

Current TS 3.3.c.1.B.2 defines the spray additive tank as part of the Internal Containment Spray (ICS) train; i.e, a spray pump suction flow path from the additive tank is required for a spray train to be operable.

Current TS 3.3.c.2.C allows one containment spray train to be inoperable for 72 hours with the standard shutdown sequence invoked when two ICS trains are declared inoperable. Current TS 3.3.c.2.A permits the containment spray caustic additive volume to be less than required for 48 hours (thus making the Spray Additive System inoperable). This results in conflicting guidance during the periodic testing of valves CI-1001A & B. When these valves are closed, this isolates the spray additive system, and would strictly require that both ICS trains be declared inoperable. A sketch of the ICS system is provided as Attachment 1, Page 5.

This situation was caused by the wording used in the development of TS PA 55, which resulted in conflicting TS's between the spray additive and ICS specifications. PA 55 revised the Engineered Safety Features (ESF) TS's to be consistent with the Westinghouse Standard Technical Specifications (STS). In doing so, the spray additive system and the ICS system were treated as one system versus two separate systems as is the case with STS. The ICS TS was written to include the spray additive system as part of the ICS train and was required to be operable in order for the ICS train to be operable. This original philosophy and wording created conflicting spray additive and ICS requirements.

STS treats the spray additive and ICS as separate systems only requiring that the spray system be capable of taking suction from the refueling water storage tank and containment sump, with an allowed outage time of 72 hours.

Description of Proposed Changes

The entire section TS 3.3.c has been reformatted to separate the ICS and the Spray Additive System into two distinct systems. The basis section is also being revised and submitted for your information.

Technical changes to the ICS TS's include the following:

1. The words "and the spray additive tank upon a Hi-Hi containment pressure signal and after manual transfer" have been removed from former TS 3.3.c.1.B.2 (new TS 3.3.c.1.A.1.b).)

Technical changes to the Spray Additive System TS's include the following:

1. Former TS 3.3.c.2.A which stated, "The quantity of NaOH solution available as a containment spray additive may be less than that specified in TS 3.3.c.1.A for a period of 48 hours" has bcen changed to allow the Spray Additive System to be out of service for 72 hours, and is incorporated into new TS 3.3.c.2.A.3.

2. A new TS, TS 3.3.c.2.A.2, is being added which reads "Valves and piping are capable of adding NaOH solution from the additive tank to a containment spray system."

Safety Evaluation for Proposed Changes

Changes are being made to TS Section 3.3.c to clarify LCO time requirements of the Spray Additive System and the ICS TS's. Specifically, the changes being made include: 1) separating the ICS and the Spray Additive Systems into two distinct systems; 2) extending the time the spray additive system may be out of service from 48 hours to 72 hours; 3) removing the requirement to have a spray pump suction flow path from the additive tank for a spray train to be operable; and 4) adding a requirement to the Spray Additive System TS's that valves and piping shall be capable of adding NaOH solution from the additive tank to a containment spray system. These changes are consistent with STS.

Separating the ICS and Spray Additive System into two distinct systems is an administrative change only. This change has been reviewed to ensure it does not alter the intent or interpretation of the specification; therefore, there is no impact on public health or safety.

Extending the time the Spray Additive System may be out of service from 48 hours to 72 hours and removing the requirement to have a spray pump suction flow path from the additive tank for a spray train to be operable is consistent with STS. The STS only require that the spray system be capable of taking suction from the refueling water storage tank and the Residual Hcat Removal system during the recirculation phase.

The Spray Additive System is necessary to reduce the release of radioactive material to the environment in the event of a Design Basis Accident. If the Spray Additive System is inoperable, it must be restored to operable within 72 hours. The pH adjustment of the

Containment Spray System flow for corrosion protection and iodine removal enhancement is reduced in this condition. The Containment Spray System would still be available and would remove some iodine from the containment atmosphere in the event of a Design Basis Accident. The 72 hour completion time takes into account the Containment Spray System capabilities and the low probability of the worst case Design Basis Accident occurring during this period; therefore, there is no effect on public health and safety.

Adding a requirement to the Spray Additive System TS's that valves and piping shall be capable of adding NaOH solution from the additive tank to a containment spray system is an enhancement to the current TS; therefore, there is no effect on public health and safety.

Significant Hazards Determination for Proposed Changes

The proposed changes were reviewed in accordance with the provision of 10 CFR 50.92 to show no significant hazards exist. The proposed changes will not:

1) involve a significant increase in the probability or consequences of an accident previously evaluated.

   The likelihood that an accident will occur is neither increased nor decreased by these TS changes. These TS changes will not impact the function or method of operation of plant equipment. Thus, there is not a significant increase in the probability of a previously analyzed accident due to these changes. No systems, equipment, or components are affected by the proposed changes. Thus, the consequences of the malfunction of equipment important to safety previously evaluated in the Updated Safety Analysis Report (USAR) are not increased by these changes.

   The proposed changes have no impact on accident initiators or plant equipment, and thus, do not affect the probabilities or consequences of an accident.

2) create the possibility of a new or different kind of accident from any accident previously evaluated.

   The proposed TS changes would not create the possibility of a new or different kind of accident from any accident previously evaluated.

   The proposed changes do not involve changes to the physical plant or operations. Since these changes do not contribute to accident initiation, they do not produce a new accident scenario or produce a new type of equipment malfunction. Also, these changes do not

alter any existing accident scenarios; they do not affect equipment or its operation, and thus, do not create the possibility of a new or different kind of accident.

3) involve a significant reduction in the margin of safety.

Operation of the facility in accordance with the proposed TS would not involve a significant reduction in a margin of safety. The proposed changes do not affect plant equipment or operation. Safety limits and limiting safety system settings are not affected by these proposed changes. Extending the time the Spray Additive System may be out of service from 48 hours to 72 hours and removing the requirement to have a spray pump suction flow path from the additive tank for a spray train to be operable is consistent with STS. The STS only require that the spray system be capable of taking suction from the refueling water storage tank and the containment sump.

The Containment Spray System would still be available and would remove some iodine from the containment atmosphere in the event of a Design Basis Accident. The 72 hour completion time takes into account the Containment Spray System redundant flow path capabilities and the low probability of the worst case Design Basis Accident occurring during this period.

Environmental Considerations

This proposed amendment involves a change to a requirement with respect to the installation or use of a facility component located within the restricted area, as defined in 10 CFR Part 20, or a change to a surveillance requirement. WPSC has determined that this proposed amendment involves no significant hazards considerations and no significant change in the types of any effluents that may be released offsite and that there is no significant increase in individual or cumulative occupational radiation exposure. Accordingly, this proposed amendment meets the eligibility criteria for categorical exclusion set forth in 10 CFR 51.22(c)(9). Pursuant to 10 CFR 51.22(b), no environmental impact statement or environmental assessment need be prepared in connection with this proposed amendment.

INTERNAL CONTAINMENT SPRAY

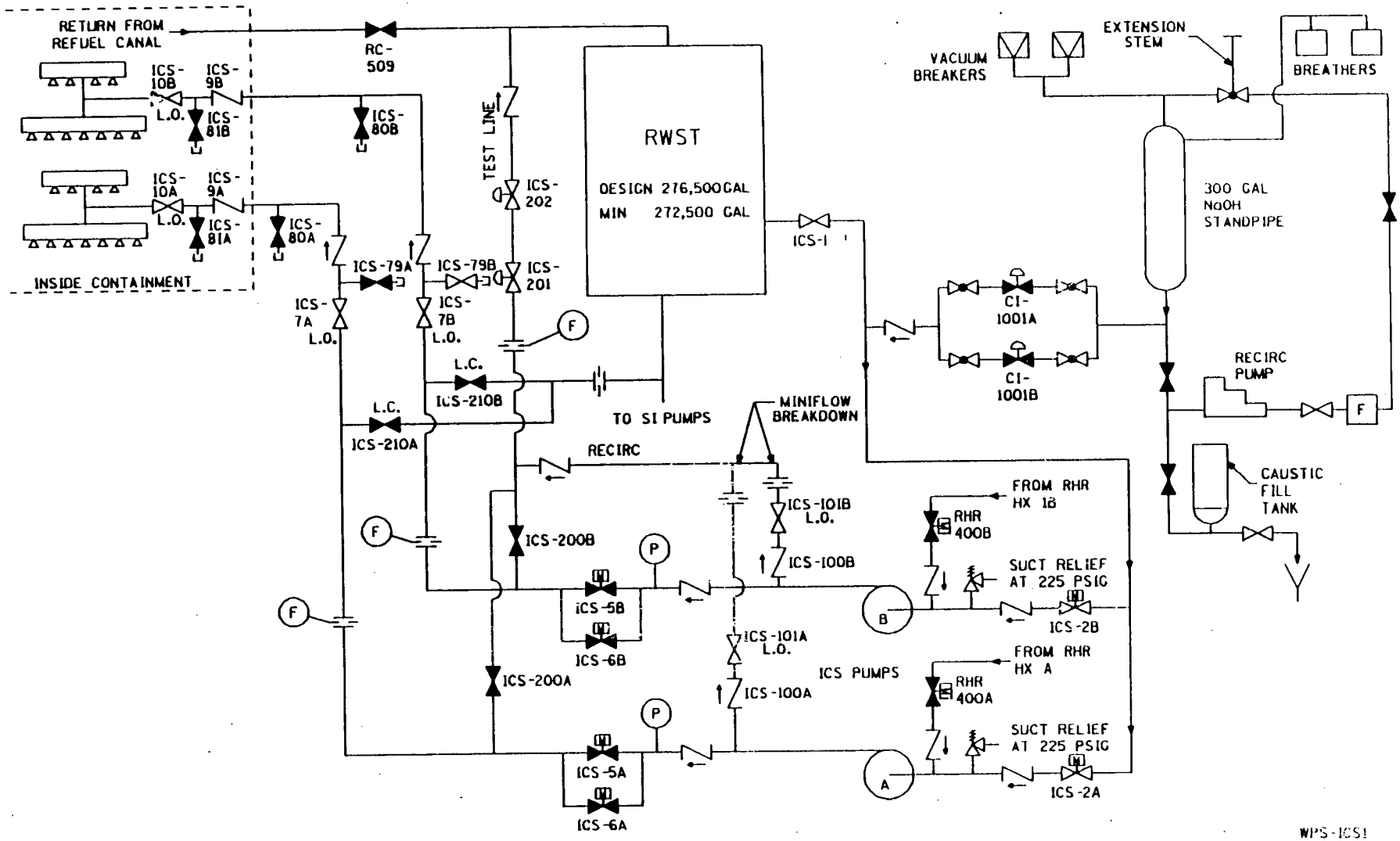

FOR TRAINING ONLY

WPS-ICS1
OPERM-217
REV. AC-1

ATTACHMENT 2

TO

Letter from C. R. Steinhardt (WPSC)

to

Document Control Desk (NRC)

Dated

May 17, 1994

PROPOSED TS AMENDMENT NO. 129

Affected TS Pages

TS 3.3-4
TS 3.3-5
TS B3.3-3
TS B3.3-4

c. Containment Cooling Systems

1. Containment Spray and Containment Fancoil Units

A. The reactor shall not be made critical unless the following conditions are satisfied, except for low-power physics tests and except as provided by TS 3.3.c.1.A.3.

1. Two containment spray trains are OPERABLE with each train comprised of:

a) ONE containment spray pump.

b) An OPERABLE flow path consisting of all valves and piping associated with the above train of components and required to function during accident conditions. This flow path shall be capable of taking suction from the Refueling Water Storage Tank and supplied from the containment sump.

2. TWO trains of containment fancoil units are OPERABLE with two fancoil units in each train.

3. During power operation or recovery from inadvertent trip, any one of the following conditions of inoperability may exist during the time intervals specified. If OPERABILITY is not restored within the time specified, then within 1 hour action shall be initiated to:

- Achieve HOT STANDBY within the next 6 hours.
- Achieve HOT SHUTDOWN within the following 6 hours.
- Achieve COLD SHUTDOWN within an additional 36 hours.

a) One containment fancoil unit train may be out of service for 7 days provided the opposite containment fancoil unit train remains OPERABLE.

b) One containment spray train may be out of service for 72 hours provided the opposite containment spray train remains OPERABLE.

c) Both containment fancoil unit trains may be out of service for 72 hours provided both containment spray trains remain OPERABLE.

d) The same containment fancoil unit and containment spray trains may be out of service for 72 hours provided their opposite containment fancoil unit and containment spray trains remain OPERABLE.

2. Spray Additive System

A. The reactor shall not be made critical unless the following conditions are satisfied, except for low-power physics tests and except as provided by TS 3.3.c.2.A.3.

1. A minimum of 300 gallons of not less than 30% by weight of NaOH solution is available as a containment spray system additive.

2. Valves and piping are capable of adding NaOH solution from the additive tank to a containment spray system.

3. During power operation or recovery from inadvertent trip, the spray additive system may be out of service for 72 hours. If OPERABILITY is not restored within 72 hours, then within 1 hour action shall be initiated to:

- Achieve HOT STANDBY within the next 6 hours.
- Achieve HOT SHUTDOWN within the following 6 hours.
- Achieve COLD SHUTDOWN within an additional 36 hours.

The containment cooling function is provided by two systems: containment fancoil units and containment spray systems. The containment fancoil units and containment spray system protect containment integrity by limiting the temperature and pressure that could be experienced following a Design Basis Accident. The Limiting Design Basis accidents relative to containment integrity are the loss-of-coolant accident and steam line break. During normal operation, the fancoil units are required to remove heat lost from equipment and piping within the containment.[3] In the event of the Design Basis Accident, any one of the following combinations will provide sufficient cooling to limit containment pressure to less than design values: four fancoil units, two containment spray pumps, or two fancoil units plus one containment spray pump.[4]

In addition to heat removal, the containment spray system is also effective in scrubbing fission products from the containment atmosphere. Therefore, a minimum of one train of containment spray is required to remain OPERABLE in order to scavenge iodine fission products from the containment atmosphere and ensure their retention in the containment sump water.[5][6]

Sodium Hydroxide (NaOH) is added to the spray solution for pH adjustment by means of the spray additive system. The resulting alkaline pH of the spray enhances the ability of the spray to scavenge iodine fission products from the containment atmosphere. The NaOH added in the spray also ensures an alkaline pH for the solution recirculated in the containment sump.

The alkaline pH of the containment sump water inhibits the volatility of iodine and minimizes the occurrence of chloride and caustic stress corrosion on mechanical systems and components exposed to the sump fluid. Test data has shown that no significant stress corrosion cracking will occur provided the pH is adjusted within 2 days following the Design Basis Accident.[7][8]

A minimum of 300 gallons of not less than 30% by weight of NaOH solution is sufficient to adjust the pH of the spray solution adequately. The additive will still be considered available whether it is contained in the spray additive tank or the containment spray system piping and Refueling Water Storage Tank due to an inadvertent opening of the spray additive valves (CI-1001A and CI-1001B).

---

[3]USAR Section 6.3

[4]USAR Section 6.4

[5]USAR Section 6.4.3

[6]USAR Section 14.3.5

[7]USAR Section 6.4

[8]Westinghouse Chemistry Manual S1P 5-1, Rev. 2, dated 3/77, Section 4.

The spray additive system may be inoperable for up to 72 hours. The containment spray system would still be available and would remove some iodine from the containment atmosphere in the event of a Design Basis Accident. The 72-hour completion time takes into account the containment spray system capabilities and the low probability of the worst case Design Basis Accident occurring during this period.

One component cooling water pump together with one component cooling heat exchanger can accommodate the heat removal load either following a loss-of-coolant accident, or during normal plant shutdown. If, during the post-accident phase, the component cooling water supply were lost, core and containment cooling could be maintained until repairs were effected.[9]

A total of four service water pumps are installed, and a minimum of two are required to operate during the postulated loss-of-coolant accident.[10] The service water valves in the redundant safeguards headers have to be OPERABLE in order for the components that they supply to be considered OPERABLE.

The various trains of equipment referred to in the specifications are separated by their power supplies (i.e.: SI Pump 1A, RHR Pump 1A, Valves SI-2A and S1-4A, etc.). Shared piping and valves are considered to be common to both trains of the systems (i.e.: SI-3, etc.).

The closure of the hand operated valve for a brief period of time during the surveillance testing of the automatic valves in the Safety Injection System will prevent dilution of the concentrated boric acid or loss of concentrated boric acid to the Refueling Water Storage Tank.

---

[9] USAR Section 9.3

[10] USAR Section 9.6